Form No. 3328–446

Z17-44

TimeCutter® ZX Riding Mower

Model No. 74502—Serial No. 230000001 and Up

Operator’s Manual

Warning

CALIFORNIA

Proposition 65 Warning

The engine exhaust from this product contains chemicals known to the State of California to cause cancer, birth defects, or other reproductive harm.

Important This engine is not equipped with a spark arrester muffler. It is a violation of California Public Resource Code Section 4442 to use or operate this engine on any forest-covered, brush-covered, or grass-covered land. Other states or federal areas may have similar laws.

This spark ignition system complies with Canadian ICES-002.

Ce système d'allumage par étincelle de véhicule est conforme à la norme NMB-002 du Canada.

The enclosed Engine Owner's Manual is supplied for information regarding The U.S. Environmental Protection Agency (EPA) and the California Emission Control Regulation of emission systems, maintenance and warranty.

Keep this engine Owner's Manual with your unit. Should this engine Owner's Manual become damaged or illegible, replace immediately. Replacements may be ordered through the engine manufacturer.

Contents

	Page
Introduction	2
Safety	3
Safe Operating Practices	3
Toro Riding Mower Safety	5
Slope Chart	7
Safety and Instruction Decals	9
Gasoline and Oil	13
Recommended Gasoline	13
Using Stabilizer/Conditioner	13
Filling the Fuel Tank	13
Checking the Engine Oil Level	13
Operation	14
Think Safety First	14
Controls	14
Parking Brake	15
Starting and Stopping the Engine	15
Operating the Power Take Off (PTO)	16
The Safety Interlock System	16
Testing the Safety Interlock System	16
Driving Forward or Backward	17
Stopping the Machine	17
Adjusting the Height of Cut	17
Adjusting the Anti-Scalp Rollers	18
Positioning the Seat	18
Adjusting the Motion Control Levers	19
Pushing the Machine by Hand	19
Side Discharge	20
Tips for Mowing Grass	20
Maintenance	21
Recommended Maintenance Schedule	21
Servicing the Engine Oil	22
Servicing the Air Cleaner	23
Servicing the Spark Plug	24
Cutting Blades	25
Greasing and Lubrication	27
Servicing the Battery	28
Draining the Fuel Tank	30
Replacing the Fuel Filter	30
Tire Pressure	30
Leveling the Mower from Side-to-Side	30
Adjusting the Front-to-Rear Blade Slope	31
Inspecting the Belts	33
Replacing the Mower Belt	33
Removing the Mower	33
Installing the Mower	34
Fuse	34
Washing the Underside of the Mower	34
Replacing the Grass Deflector	35
Wiring Diagram	36
Cleaning and Storage	37
Troubleshooting	37
The Toro Total Coverage Guarantee	40

Introduction

Read this manual carefully to learn how to operate and maintain your product properly. The information in this manual can help you and others avoid injury and product damage. Although Toro designs and produces safe products, you are responsible for operating the product properly and safely.

Whenever you need service, genuine Toro parts, or additional information, contact an Authorized Service Dealer or Toro Customer Service and have the model and serial numbers of your product ready. Figure 1 illustrates the location of the model and serial numbers on the product.

© 2003 by The Toro Company
8111 Lyndale Avenue South
Bloomington, MN 55420-1196

All Rights Reserved

Printed in the USA

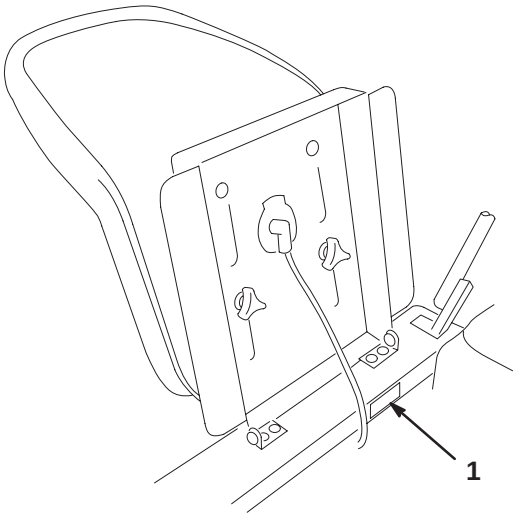

Figure 1

1. Model and serial number plate

Write the product model and serial numbers in the space below:

Model No. _____

Serial No. _____

This manual identifies potential hazards and has special safety messages that help you and others avoid personal injury and even death. ***Danger***, ***Warning***, and ***Caution*** are signal words used to identify the level of hazard. However, regardless of the hazard, be extremely careful.

Danger signals an extreme hazard that *will* cause serious injury or death if you do not follow the recommended precautions.

Warning signals a hazard that *may* cause serious injury or death if you do not follow the recommended precautions.

Caution signals a hazard that may cause minor or moderate injury if you do not follow the recommended precautions.

This manual uses two other words to highlight information. **Important** calls attention to special mechanical information and **Note:** emphasizes general information worthy of special attention.

Safety

This machine meets or exceeds the B71.1–1998 specifications of the American National Standards Institute, in effect at the time of production. However, improper use or maintenance by the operator or owner can result in injury. To reduce the potential for injury, comply with these safety instructions and always pay attention to the safety alert ⚠ symbol, which means CAUTION, WARNING, or DANGER—"personal safety instruction." Failure to comply with the instruction may result in personal injury or death.

Safe Operating Practices

The following instructions are from ANSI standard B71.1—1998.

This product is capable of amputating hands and feet and throwing objects. Always follow all safety instructions to avoid serious injury or death.

General Operation

- Read, understand, and follow all instructions in the operator's manual and on the machine before starting.
- Allow only responsible adults who are familiar with the instructions to operate the machine.
- Clear the area of objects such as rocks, toys, wire, etc., which could be picked up and thrown by the blade.
- Be sure the area is clear of other people before mowing. Stop the machine if anyone enters the area.
- Never carry passengers.
- Be aware of the mower discharge direction and do not point it at anyone. Do not operate the mower without either the entire grass catcher or the guard in place.
- Be alert, slow down and use caution when making turns. Look behind and to the side before changing directions.
- Never leave a running machine unattended. Always turn off blades, set parking brake, stop engine, and remove key before dismounting.
- Turn off blades when not mowing.
- Stop the engine before removing the grass catcher or unclogging the chute.
- Mow only in daylight or good artificial light.
- Do not operate the machine while under the influence of alcohol or drugs.
- Watch for traffic when operating near or crossing roadways.

- Be alert, slow down and use caution when making turns. Look behind and to the side before changing directions.
- Use extra care when loading or unloading the machine into a trailer or truck.
- Always wear safety goggles or safety glasses with side shields when operating mower.
- Data indicates that operators, age 60 years and above, are involved in a large percentage of riding mower–related injuries. These operators should evaluate their ability to operate the riding mower safely enough to protect themselves and others from serious injury.

Slope Operation

- Do not mow slopes greater than 15 degrees.
- Do not mow near drop–offs, ditches, steep banks or water. Wheels dropping over edges can cause rollovers, which may result in serious injury, death or drowning.
- Do not mow slopes when grass is wet. Slippery conditions reduce traction and could cause sliding and loss of control.
- Reduce speed and use extreme caution on slopes.
- Do not make sudden turns or rapid speed changes.
- Use a walk behind mower and/or a hand trimmer near drop–offs, ditches, steep banks or water.
- Remove or mark obstacles such as rocks, tree limbs, etc. from the mowing area. Tall grass can hide obstacles.
- Watch for ditches, holes, rocks, dips, and rises that change the operating angle, as rough terrain could overturn the machine.
- Avoid sudden starts when mowing uphill because the mower may tip backwards.
- Be aware that loss of traction may occur going downhill. Weight transfer to the front wheels may cause drive wheels to slip and cause loss of braking and steering.
- Always avoid sudden starting or stopping on a slope. If tires lose traction, disengage the blades and proceed slowly off the slope.
- Use extreme care with grass catchers or other attachments. These can change the stability of the machine and cause loss of control.

Children

Tragic accidents can occur if the operator is not alert to the presence of children. Children are often attracted to the machine and the mowing activity. Never assume that children will remain where you last saw them.

- Keep children out of the mowing area and under the watchful care of another responsible adult.
- Be alert and turn the machine off if children enter the area.
- Before and while backing or changing direction, look behind, down, and side–to–side for small children.
- Never carry children, even with the blades off. They may fall off and be seriously injured or interfere with safe machine operation.
- Children who have been given rides in the past may suddenly appear in the mowing area for another ride and be run over or backed over by the mower.
- Never allow children to operate the machine.
- Use extra care when approaching blind corners, shrubs, trees, the end of a fence or other objects that may obscure vision.

Service

- Use extra care when handling gasoline and other fuels. They are flammable and vapors are explosive.
  - A. Use only an approved container.
  - B. Never remove the gas cap or add fuel when the engine is running. Allow the engine to cool before refueling. Do not smoke.
  - C. Never refuel the machine indoors.
  - D. Never store the machine or fuel container inside where there is an open flame, such as near a water heater or furnace.
- Never run a machine inside a closed area.
- Keep nuts and bolts tight, especially the blade attachment bolts. Keep equipment in good condition.
- Never tamper with safety devices. Check their proper operation regularly.
- Keep the machine free of grass, leaves, or other debris build-up. Clean up oil or fuel spillage. Allow the machine to cool before storing.
- Stop and inspect the equipment if you strike an object. Repair, if necessary, before restarting.
- Grass catcher components are subject to wear, damage and deterioration, which could expose moving parts or allow objects to be thrown. Frequently check components and replace with manufacturer’s recommended parts, when necessary.

- Mower blades are sharp and can cut. Wrap the blade(s) or wear gloves, and use extra caution when servicing them.
- Use only genuine Toro replacement parts to ensure that original standards are maintained.

Toro Riding Mower Safety

The following list contains safety information specific to Toro products or other safety information that you must know that is not included in the ANSI standards.

- Engine exhaust contains carbon monoxide, which is an odorless, deadly poison that can kill you. Do not run engine indoors or in an enclosed area.
- Stop the engine, disconnect spark plug wire(s) and remove key before performing any service, repairs, maintenance or adjustments.
- Never leave a running machine unattended. Always turn off blades, set parking brake, stop engine, and remove the ignition key before dismounting.
- Keep hands, feet, hair, and loose clothing away from attachment discharge area, underside of mower and any moving parts while engine is running.
- Do not touch equipment or attachment parts which may be hot from operation. Allow to cool before attempting to maintain, adjust or service.
- Battery acid is poisonous and can cause burns. Avoid contact with skin, eyes, and clothing. Protect your face, eyes, and clothing when working with a battery.
- Battery gases can explode. Keep cigarettes, sparks and flames away from battery.
- Use only Toro approved attachments. Warranty may be voided if used with unapproved attachments.
- If loading the machine onto a trailer or truck, use a single, full-width ramp only. The ramp angle should not exceed 15 degrees.

Slope Chart

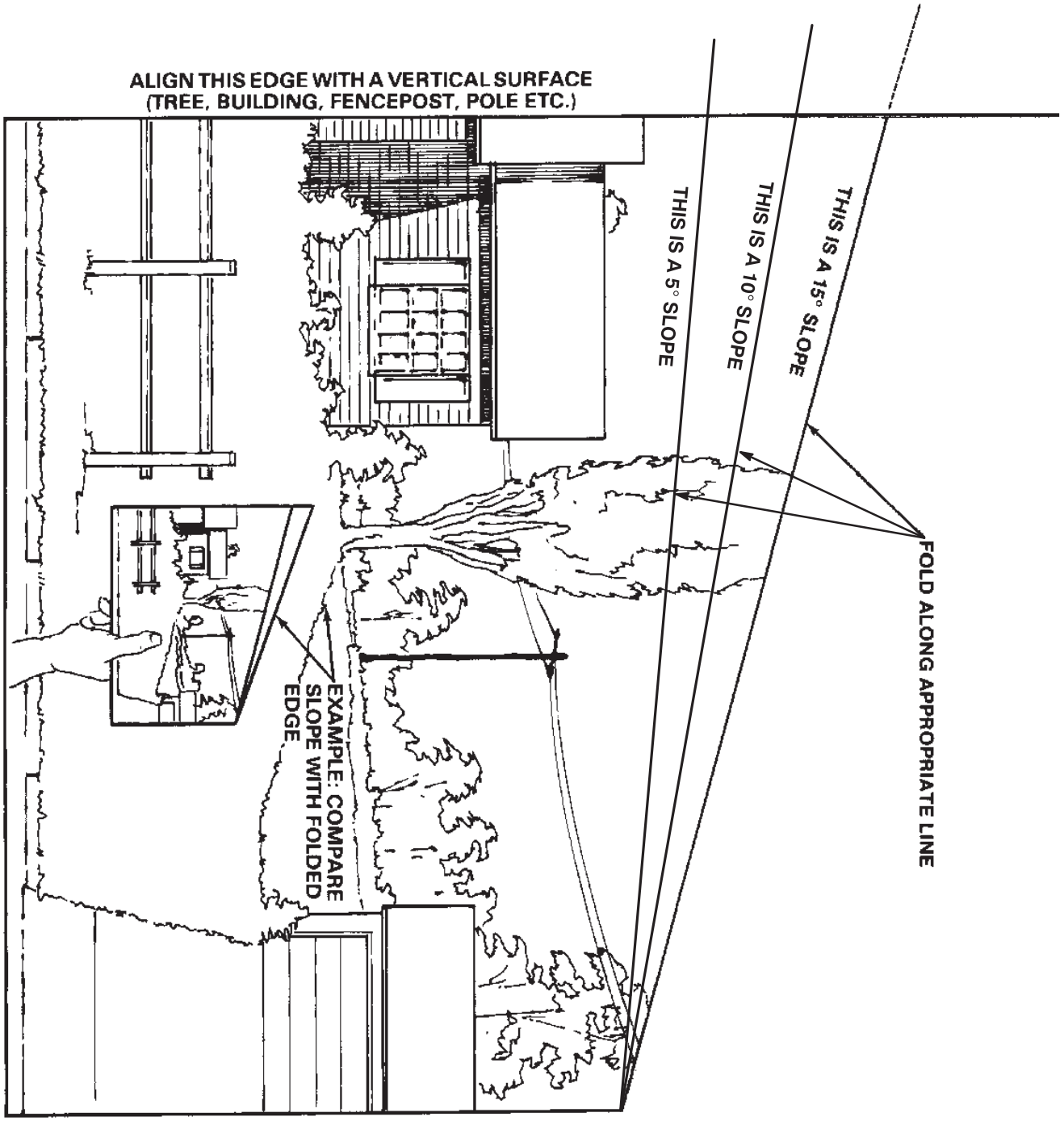
ALIGN THIS EDGE WITH A VERTICAL SURFACE
(TREE, BUILDING, FENCEPOST, POLE ETC.)
THIS IS A 5° SLOPE
THIS IS A 10° SLOPE
THIS IS A 15° SLOPE
FOLD ALONG APPROPRIATE LINE
EXAMPLE: COMPARE SLOPE WITH FOLDED EDGE

Safety and Instruction Decals

Safety decals and instructions are easily visible to the operator and are located near any area of potential danger. Replace any decal that is damaged or lost.

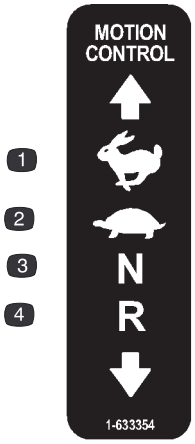

1-633354

1. Fast
2. Slow
3. Neutral
4. Reverse



65-2690

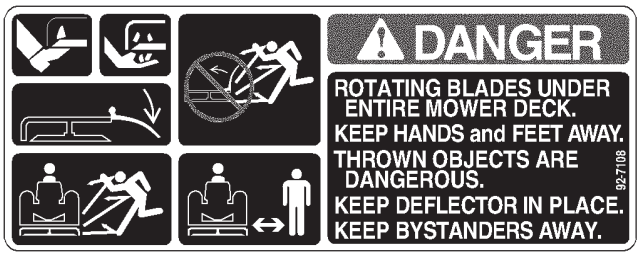

92-7108



92-7109



93-1122

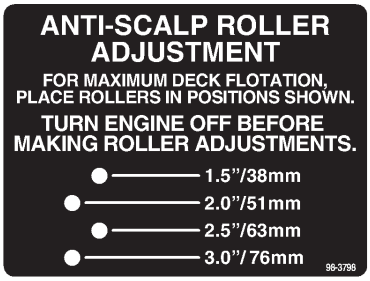

98-3798

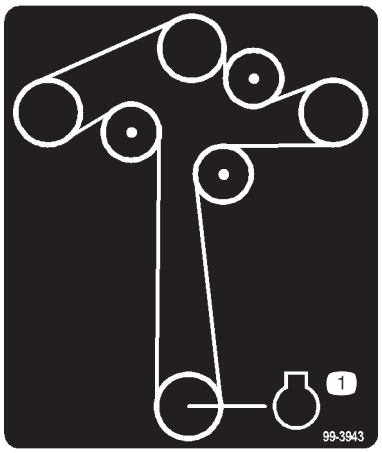

99-3943

1. Engine

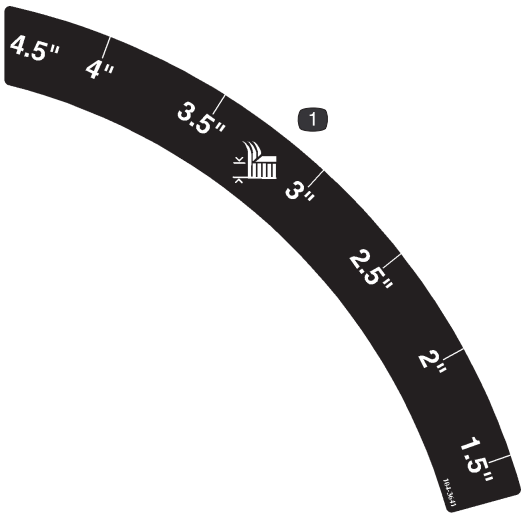

104-3641

1. Height of cut

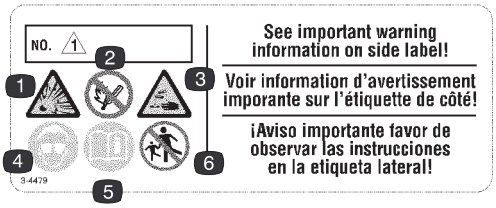

104-4163

1. Explosion hazard
2. No fire, open flames, or smoking.
3. Caustic liquid/chemical burn hazard
4. Wear eye protection
5. Read the *Operator's Manual.*
6. Keep bystanders a safe distance from the battery.



104-8008

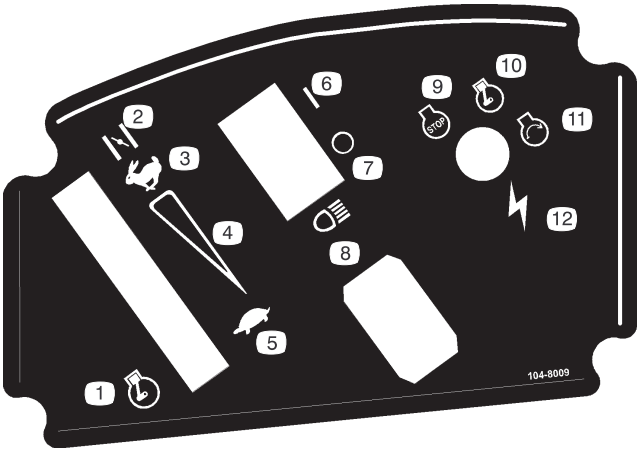

104-8009

1. Throttle
2. Choke
3. Fast
4. Continuous variable setting
5. Slow
6. On
7. Off
8. Headlights
9. Engine—stop
10. Engine—run
11. Engine—start
12. Ignition

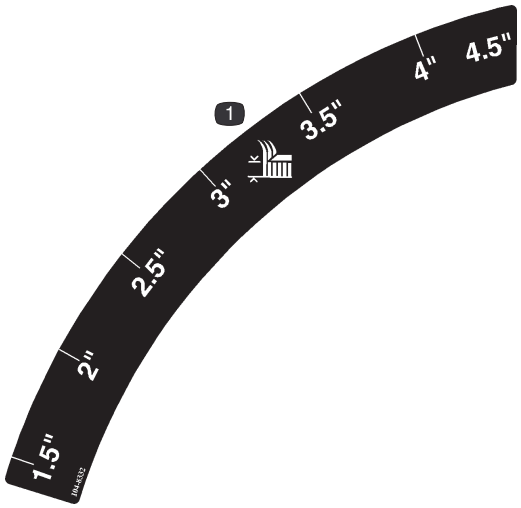

104-8032

1. Height of cut

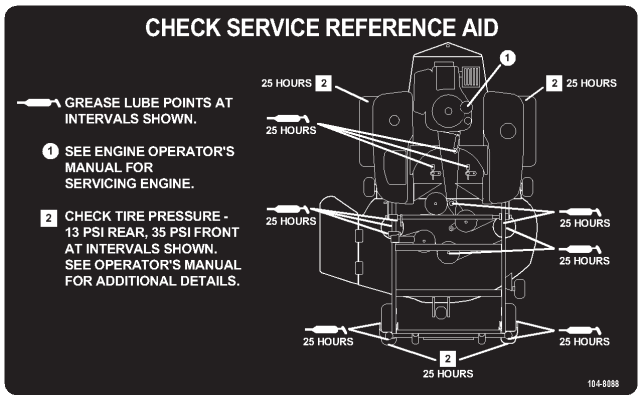

104-8088



104-5091

1. Contains lead; do not discard.
2. Recycle
3. Wear eye protection; explosive gases can cause blindness and other injuries
4. No sparks, flame, or smoking
5. Sulfuric acid can cause blindness or severe burns.
6. Flush eyes immediately with water and get medical help fast.
7. Maximum fill line
8. Minimum fill line
9. Instructions for activating the battery


DISENGAGE
ENGAGE
BRAKE
DANGER
TO AVOID SERIOUS INJURY OR DEATH:
• READ AND UNDERSTAND OPERATOR'S MANUAL.
• USE SAFELY; MACHINE IS NOT A TOY.
• NEVER USE WHEN UNDER THE INFLUENCE OF ALCOHOL OR DRUGS.
• KNOW LOCATION AND FUNCTION OF CONTROLS.
• KEEP SAFETY SHIELDS IN PLACE AND WORKING.
• CHECK PERFORMANCE OF ALL INTERLOCK SWITCHES DAILY.
DO NOT DEFEAT INTERLOCK SYSTEM. IT IS FOR YOUR PROTECTION.
• STOP ENGINE, SET PARKING BRAKE & REMOVE KEY BEFORE LEAVING MACHINE.
• DO NOT ENGAGE PARKING BRAKE WHILE MACHINE IS MOVING.
• NEVER CARRY CHILDREN OR OTHER PASSENGERS EVEN WITH BLADES OFF.
• LOOK DOWN AND BEHIND BEFORE & WHILE BACKING UP.
• GO UP AND DOWN SLOPES, NOT ACROSS.
• NEVER MOW WHEN CHILDREN, PEOPLE OR PETS ARE IN MOWING AREA.
• IF MACHINE STOPS GOING UP HILL, STOP BLADE AND BACK SLOWLY DOWN.
• THROWN OBJECTS OR BLADE CONTACT CAN CAUSE SERIOUS INJURY OR DEATH.
• AVOID SHARP OR SUDDEN TURNS & SLIPPERY OR STEEP AREAS.
• AVOID BLADE UNLESS BLADE AND ENGINE ARE STOPPED.
• REMOVE OBJECTS THAT COULD BE THROWN BY THE BLADE.
FOR REPLACEMENT MANUAL, SEND MODEL & SERIALNUMBER TO:
THE TORO COMPANY, 8111 LYNDALE AVE. S., BLOOMINGTON, MN 55420.
NEVER MOW HILL SIDE
WARNING
• PARKING BRAKE MAY NOT HOLD MACHINE IF PARKED ON SLOPE.
• UNATTENDED UNIT MAY ROLL AWAY & CAUSE PERSONAL INJURY OR PROPERTY DAMAGE.
• DO NOT PARK ON SLOPES UNLESS WHEELS ARE CHOCKED OR BLOCKED.
104-8014

104-8014

Gasoline and Oil

Recommended Gasoline

Use UNLEADED Regular Gasoline suitable for automotive use (87 pump octane minimum). Leaded regular gasoline may be used if unleaded regular is not available.

Important Never use methanol, gasoline containing methanol, or gasohol containing more than 10% ethanol because the fuel system could be damaged. Do not mix oil with gasoline.

Danger

In certain conditions, gasoline is extremely flammable and highly explosive. A fire or explosion from gasoline can burn you and others and can damage property.

- **Fill the fuel tank outdoors, in an open area, when the engine is cold. Wipe up any gasoline that spills.**
- **Never fill the fuel tank inside an enclosed trailer.**
- **Do not fill the fuel tank completely full. Add gasoline to the fuel tank until the level is 1/4 to 1/2 inch (6 to 13 mm) below the bottom of the filler neck. This empty space in the tank allows gasoline to expand.**
- **Never smoke when handling gasoline, and stay away from an open flame or where gasoline fumes may be ignited by a spark.**
- **Store gasoline in an approved container and keep it out of the reach of children. Never buy more than a 30-day supply of gasoline.**
- **Always place gasoline containers on the ground away from your vehicle before filling.**
- **Do not fill gasoline containers inside a vehicle or on a truck or trailer bed because interior carpets or plastic truck bed liners may insulate the container and slow the loss of any static charge.**
- **When practical, remove gas–powered equipment from the truck or trailer and refuel the equipment with its wheels on the ground.**
- **If this is not possible, then refuel such equipment on a truck or trailer from a portable container, rather than from a gasoline dispenser nozzle.**
- **If a gasoline dispenser nozzle must be used, keep the nozzle in contact with the rim of the fuel tank or container opening at all times until fueling is complete.**

Warning

Gasoline is harmful or fatal if swallowed.
Long–term exposure to vapors can cause serious injury and illness.

- **Avoid prolonged breathing of vapors.**
- **Keep face away from nozzle and gas tank or conditioner opening.**
- **Keep gas away from eyes and skin.**

Using Stabilizer/Conditioner

Use a fuel stabilizer/conditioner in the machine to provide the following benefits:

- Keeps gasoline fresh during storage of 90 days or less. For longer storage it is recommended that the fuel tank be drained.
- Cleans the engine while it runs
- Eliminates gum-like varnish buildup in the fuel system, which causes hard starting

Important Do not use fuel additives containing methanol or ethanol.

Add the correct amount of gas stabilizer/conditioner to the gas.

Note: A fuel stabilizer/conditioner is most effective when mixed with fresh gasoline. To minimize the chance of varnish deposits in the fuel system, use fuel stabilizer at all times.

Filling the Fuel Tank

1. Shut the engine off and set the parking brake.
2. Clean around the fuel tank cap and remove the cap. Add unleaded regular gasoline to the fuel tank until the level is 1/4 to 1/2 inch (6 to 13 mm) below the bottom of the filler neck. This space in the tank allows gasoline to expand. Do not fill the fuel tank completely full.
3. Install the fuel tank cap securely. Wipe up any gasoline that may have spilled.

Checking the Engine Oil Level

Before you start the engine and use the machine, check the oil level in the engine crankcase; refer to Checking the Oil Level, page 22.

Operation

Note: Determine the left and right sides of the machine from the normal operating position.

Think Safety First

Please carefully read all of the safety instructions and decals in the safety section. Knowing this information could help you, your family, pets or bystanders avoid injury.

Danger

Mowing on wet grass or steep slopes can cause sliding and loss of control.

Wheels dropping over edges can cause rollovers, which may result in serious injury, death or drowning.

To avoid loss of control and possibility of rollover:

- **Do not mow near drop–offs or near water.**
- **Do not mow slopes greater than 15 degrees.**
- **Reduce speed and use extreme caution on slopes.**
- **Avoid sudden turns or rapid speed changes.**

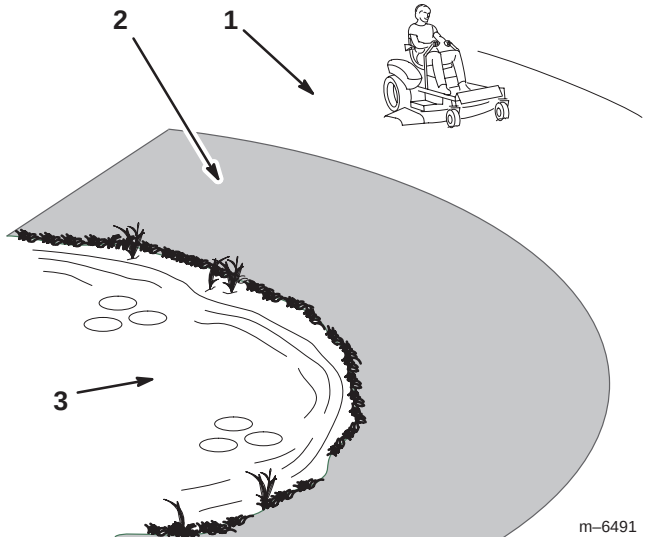

Figure 2

1. Safe Zone—use the Timecutter here
2. Use walk behind mower and/or hand trimmer near drop–offs and water.
3. Water

Controls

Become familiar with all of the controls (Fig. 3 and 4) before you start the engine and operate the machine.

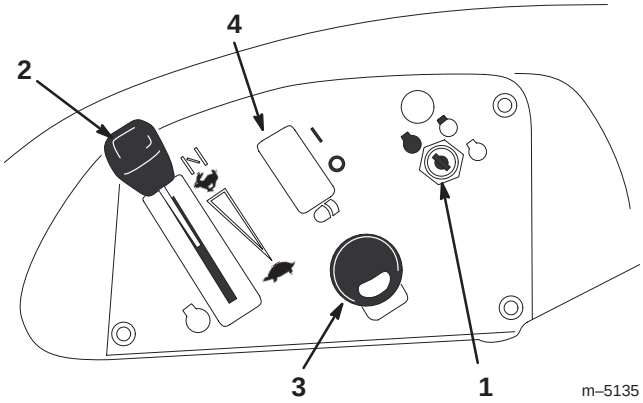

Figure 3

1. Ignition switch
2. Throttle/Choke
3. Power take off (PTO)
4. Headlights—optional

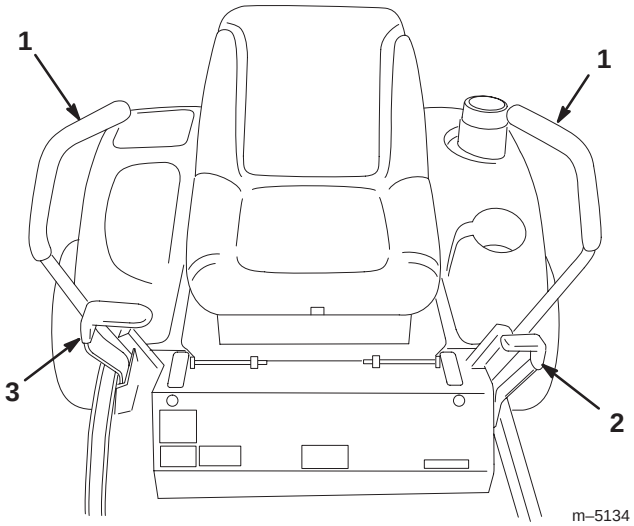

Figure 4

1. Motion control lever
2. Parking brake lever
3. Height-of-cut lever

Parking Brake

Always set the parking brake when you stop the machine or leave it unattended.

Setting the Parking Brake

1. Move the motion control levers (Fig. 4) out to the neutral lock position.
2. Pull back and up on the parking brake lever to set the parking brake (Fig. 5). The parking brake lever should stay firmly in the Engaged position.

Important Do not engage the parking brake while the machine is moving. Damage to the drive system may occur.

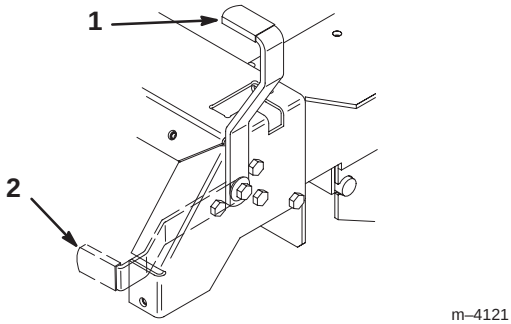

m–4121

Figure 5

1. Parking brake—On
2. Parking brake—Off

Releasing the Parking Brake

Push forward and down on the parking brake lever to release the parking brake (Fig. 5).

Starting and Stopping the Engine

Starting

1. Sit down on the seat and move the motion controls to neutral locked position.
2. Set the parking brake; refer to Setting the Parking Brake, page 15.
3. Move the PTO (power take off) to Off (Fig. 6).

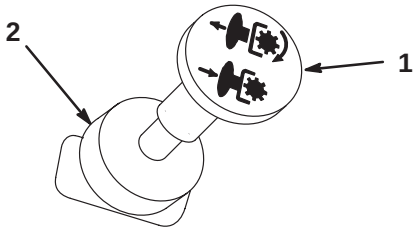

m–4201

Figure 6

1. PTO—On
2. PTO—Off

4. Move the throttle lever to Choke before starting a cold engine.

Note: A warm or hot engine may require choking. After the engine starts, move the throttle lever to Fast.

5. Turn the ignition key to Start to energize the starter. When the engine starts, release the key.

Important Do not engage the starter for more than 10 seconds at a time. If the engine fails to start, allow a 60 second cool-down period between attempts. Failure to follow these instructions can burn out the starter motor.

6. After the engine starts, move the throttle lever to Fast (Fig. 7). If the engine stalls or hesitates, move the throttle lever back to Choke for a few seconds. Then move the throttle lever to the desired setting. Repeat this as required.

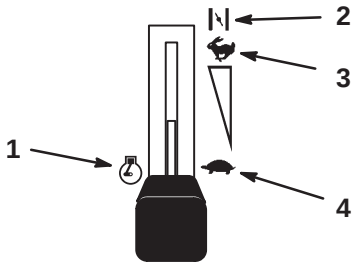

m–5126

Figure 7

1. Engine
2. Choke
3. Fast
4. Slow

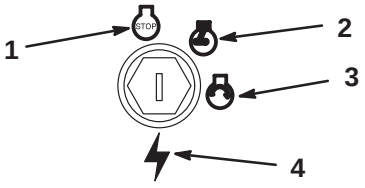

m–4268

Figure 8

1. Off
2. Run
3. Start
4. Ignition

Stopping

1. Move the throttle lever to Fast (Fig. 7).
2. Move the PTO to Off (Fig. 6).
3. Turn the ignition key to Off (Fig. 8).
4. Pull the wire off of the spark plug(s) to prevent the possibility of someone accidentally starting the machine before transporting or storing the machine.
5. Close the fuel shut-off valve under the front of the fuel tank before transporting or storing the machine.

Important Make sure the fuel shut-off valve is closed before transporting or storing machine, as fuel leakage may occur.

Operating the Power Take Off (PTO)

The power take off (PTO) switch engages and disengages power to the electric clutch.

Engaging the PTO

1. Release pressure on the traction control levers and place the machine in neutral.
2. Move the throttle to the Fast position.
3. Pull out on the PTO switch to engage it (Fig. 9).

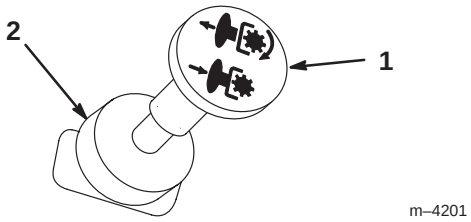

Figure 9

1. PTO—On
2. PTO—Off

Disengaging the PTO

Push the PTO switch to Off (Fig. 9).

The Safety Interlock System

Caution

If safety interlock switches are disconnected or damaged the machine could operate unexpectedly causing personal injury.

- **Do not tamper with the interlock switches.**
- **Check the operation of the interlock switches daily and replace any damaged switches before operating the machine.**

Understanding the Safety Interlock System

The safety interlock system is designed to prevent the engine from starting unless:

- The parking brake is engaged.
- The PTO is disengaged.
- The motion control levers are in the neutral locked position.

The safety interlock system also is designed to stop the engine when the traction controls are moved with the parking brake on or if you rise from the seat when the PTO is engaged.

Testing the Safety Interlock System

Test the safety interlock system before you use the machine each time. If the safety system does not operate as described below, have an Authorized Service Dealer repair the safety system immediately.

1. While sitting on the seat, engage the parking brake and move the PTO to On. Try starting the engine; the engine should not crank.
2. While sitting on the seat, engage the parking brake and move the PTO to Off. Move either motion control lever (forward or reverse). Try starting the engine; the engine should not crank. Repeat with the other motion control lever.
3. While sitting on the seat, engage the parking brake, move the PTO to Off, and lock the motion control levers in neutral. Start the engine. While the engine is running, release the parking brake, engage the PTO, and rise slightly from the seat; the engine should stop.
4. While sitting on the seat, engage the parking brake, move the PTO to Off, and lock the motion control levers in neutral. Start the engine. While the engine is running, center the motion controls and move (forward or reverse); the engine should stop.

Driving Forward or Backward

The throttle control regulates the engine speed as measured in rpm (revolutions per minute). Place the throttle control in the Fast position for best performance. Always operate in the full throttle position.

Caution

The machine can spin very rapidly. The operator may lose control of the machine and cause personal injury or damage to the machine.

- **Use caution when making turns.**
- **Slow the machine down before making sharp turns.**

Forward

1. Release the parking brake; refer to Releasing the Parking Brake, page 15.
2. Move the levers to the center, unlocked position.
3. To go forward, slowly push the motion control levers forward (Fig. 10).

Note: The engine will kill if the traction control levers are moved with the parking brake engaged.

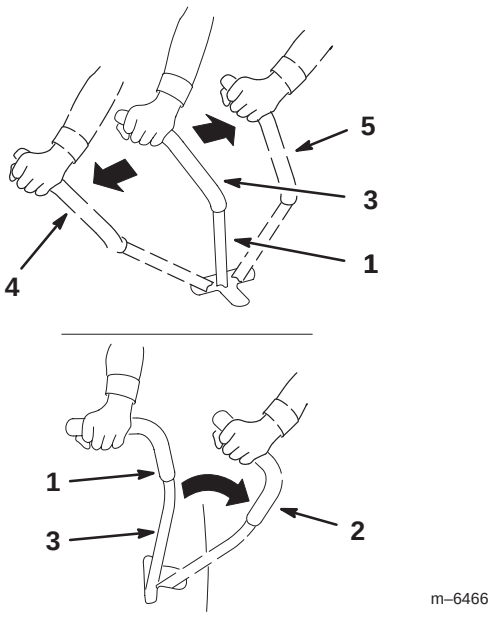

Figure 10

1. Motion control lever
2. Neutral lock position
3. Center unlocked position
4. Forward
5. Backward

To go straight, apply equal pressure to both motion control levers (Fig. 10).

To turn, release pressure on the motion control lever toward the direction you want to turn (Fig. 10).

The farther you move the traction control levers in either direction, the faster the machine will move in that direction.

To stop, pull the motion control levers to neutral.

Backward

1. Move the levers to the center, unlocked position.
2. To go backward, slowly pull the motion control levers rearward (Fig. 10).

To go straight, apply equal pressure to both motion control levers (Fig. 10).

To turn, release the pressure on the motion control lever toward the direction you want to turn (Fig. 10).

To stop, push the motion control levers to neutral.

Stopping the Machine

To stop the machine, move the traction control levers to neutral and separate to lock, disengage the PTO, and turn the ignition key to Off to stop the engine. Also set the parking brake when you leave the machine; refer to Setting the Parking Brake, page 15. Remember to remove the key from the ignition switch.

Important Do not engage the parking brake while the machine is moving. Damage to the drive system may occur.

Caution

Children or bystanders may be injured if they move or attempt to operate the tractor while it is unattended.

Always remove the ignition key and set the parking brake when leaving the machine unattended, even if just for a few minutes.

Adjusting the Height of Cut

The height of cut is adjusted from 1-1/2 to 4-1/2 inch (38 to 114 mm) in 1/2 inch (13 mm) increments by relocating the clevis pin in different hole locations.

1. Raise the height-of-cut lever to the transport position (also the 4-1/2 inch (114 mm) cutting height position) (Fig. 11).
2. To adjust, remove the hairpin cotter and clevis pin from the height-of-cut bracket (Fig. 11).
3. Select the hole in the height-of-cut bracket corresponding to the height-of-cut desired, and insert the clevis pin (Fig. 11).

4. Secure the clevis pin with the hairpin cotter (Fig. 11).

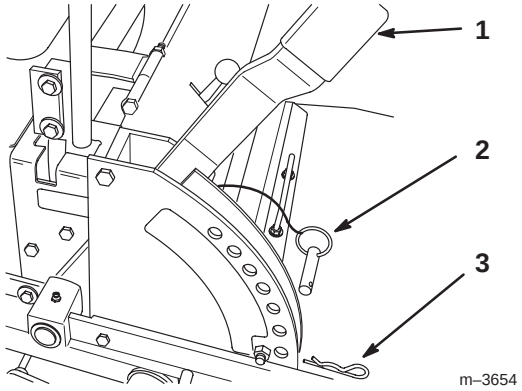

Figure 11

1. Height-of-cut lever
2. Clevis pin
3. Hairpin cotter

5. Lower the height-of-cut lever onto the clevis pin.

Adjusting the Anti-Scalp Rollers

Whenever you change the height-of-cut it is recommended to adjust the height of the anti-scalp rollers.

1. Disengage the PTO and stop the engine. Move the controllers to the neutral locked position and apply the parking brake. Remove the key.

2. After adjusting the height-of-cut, remove the nut and washer while holding the stud with a wrench (Fig. 12).

Note: Do not remove the wheel nut and washer (Fig. 12).

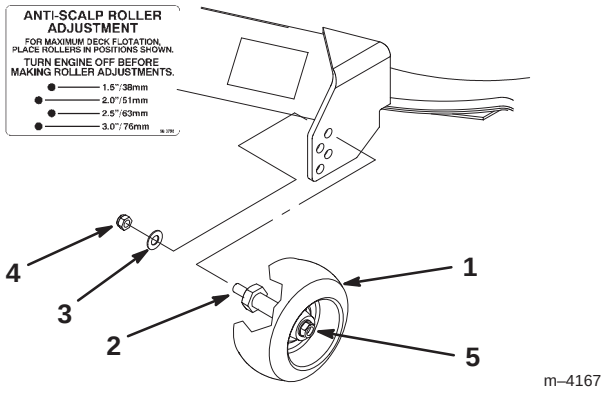

Figure 12

1. Gage wheel
2. Stud
3. Washer
4. Nut
5. Wheel nut and washer. Do not remove.

3. Select a hole so that the gage wheel is positioned to the nearest corresponding height-of-cut desired (Fig. 12).

4. Install the stud nut and washer (Fig. 12).

5. Repeat the adjustment on the other gage wheels.

Positioning the Seat

The seat can move forward and backward. Position the seat where you have the best control of the machine and are most comfortable.

1. Raise the seat and loosen the adjustment knobs (Fig. 13).

2. Move the seat to the desired position and tighten the knobs.

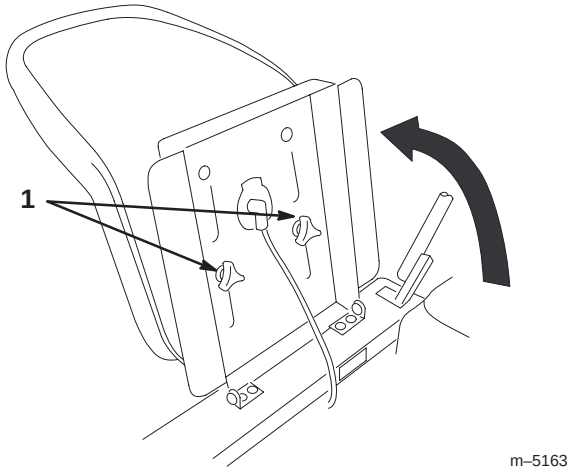

Figure 13

1. Adjustment knobs

Adjusting the Motion Control Levers

The motion control levers can be adjusted higher or lower for maximum operator comfort.

1. Remove the 2 screws and curved washers holding the control lever to the control arm shaft (Fig. 14).
2. Move the control lever to the next set of holes. Secure the lever with the 2 screws and curved washers. The cupped side of the washer should be toward the control arm shaft (Fig. 14).
3. Repeat the adjustment on the other control lever.

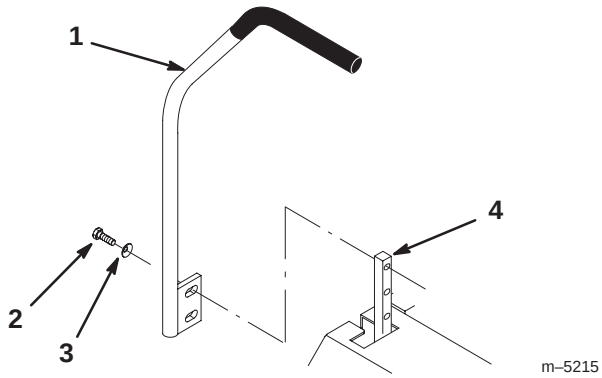

Figure 14

1. Control lever
2. Screw
3. Curved washer
4. Control arm shaft

Pushing the Machine by Hand

Important Always push the machine by hand. Never tow the machine because damage may occur.

To Push the Machine

1. Disengage the PTO, stop the engine, and remove the key.
2. Pull the two bypass levers up and push them until the washer on the rod passes through the slot. Push the levers down to lock them in place (Fig. 15).
3. Disengage the parking brake to push the machine.

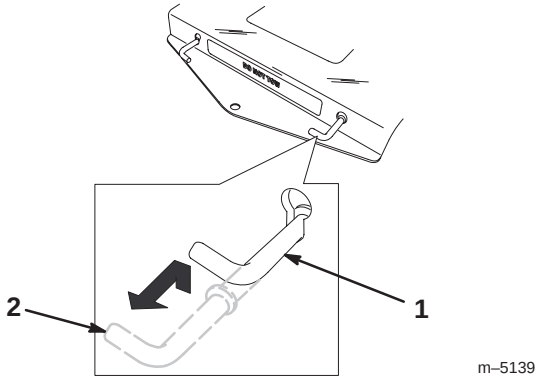

Figure 15

1. Position for pushing the machine
2. Position for operating the machine

To Operate the Machine

Pull each bypass lever up and pull them completely out. Push the levers down (Fig. 15).

Note: The machine will not drive unless the bypass levers are pulled out.

Side Discharge

The mower has a hinged grass deflector that disperses clippings to the side and down toward the turf.

Danger

Without the grass deflector, discharge cover, or complete grass catcher assembly mounted in place, you and others are exposed to blade contact and thrown debris. Contact with rotating mower blade(s) and thrown debris will cause injury or death.

- **Never remove the grass deflector from the mower because the grass deflector routes material down toward the turf. If the grass deflector is ever damaged, replace it immediately.**
- **Never put your hands or feet under the mower.**
- **Never try to clear discharge area or mower blades unless you move the PTO to Off and rotate the ignition key to Off. Also remove the key and pull the wire off the spark plug(s).**

Tips for Mowing Grass

Fast Throttle Setting

For best mowing and maximum air circulation, operate the engine at Fast. Air is required to thoroughly cut grass clippings, so do not set the height-of-cut so low as to totally surround the mower by uncut grass. Always try to have one side of the mower free from uncut grass, which allows air to be drawn into the mower.

Cutting a Lawn for the First Time

Cut grass slightly longer than normal to ensure that the cutting height of the mower does not scalp any uneven ground. However, the cutting height used in the past is generally the best one to use. When cutting grass longer than six inches tall, you may want to cut the lawn twice to ensure an acceptable quality of cut.

Cut 1/3 of the Grass Blade

It is best to cut only about 1/3 of the grass blade. Cutting more than that is not recommended unless grass is sparse, or it is late fall when grass grows more slowly.

Mowing Direction

Alternate mowing direction to keep the grass standing straight. This also helps disperse clippings which enhances decomposition and fertilization.

Mow at Correct Intervals

Normally, mow every four days. But remember, grass grows at different rates at different times. So to maintain the same cutting height, which is a good practice, mow more often in early spring. As the grass growth rate slows in mid summer, mow less frequently. If you cannot mow for an extended period, first mow at a high cutting height; then mow again two days later at a lower height setting.

Cutting Speed

To improve cut quality, use a slower ground speed.

Avoid Cutting Too Low

If the cutting width of the mower is wider than the mower you previously used, raise the cutting height to ensure that uneven turf is not cut too short.

Long Grass

If the grass is ever allowed to grow slightly longer than normal, or if it contains a high degree of moisture, raise the cutting height higher than usual and cut the grass at this setting. Then cut the grass again using the lower, normal setting.

When Stopping

If the machine’s forward motion must be stopped while mowing, a clump of grass clippings may drop onto your lawn. To avoid this, move onto a previously cut area with the blades engaged.

Keep the Underside of the Mower Clean

Clean clippings and dirt from the underside of the mower after each use. If grass and dirt build up inside the mower, cutting quality will eventually become unsatisfactory.

Blade Maintenance

Maintain a sharp blade throughout the cutting season because a sharp blade cuts cleanly without tearing or shredding the grass blades. Tearing and shredding turns grass brown at the edges, which slows growth and increases the chance of disease. Check the cutter blades daily for sharpness, and for any wear or damage. File down any nicks and sharpen the blades as necessary. If a blade is damaged or worn, replace it immediately with a genuine Toro replacement blade.

Maintenance

Note: Determine the left and right sides of the machine from the normal operating position.

Recommended Maintenance Schedule

Maintenance Service Interval	Maintenance Procedure
After first use	• Change the engine oil.
Each use	• Check the engine oil level. • Check the safety system. • Clean the mower housing.
Every 5 hours	• Check the cutting blades.
Every 25 hours	• Grease all lubrication points.[1] • Oil the linkage bushings.[1] • Service the foam air cleaner.[1] • Check the belts for wear/cracks. • Check the battery electrolyte. • Check the tire pressure.
Every 50 hours	• Change the engine oil.[2]
Every 100 hours	• Clean the cooling system.[1] • Service the paper air cleaner.[1] • Change the oil filter.[2] • Replace the fuel filter. • Replace the spark plug.
Before storage	• Perform all maintenance procedures listed above before storage. • Drain the fuel tank. • Charge the battery and disconnect the battery cables. • Paint any chipped surfaces.

[1]More often in dusty, dirty conditions

[2]More often when operating the engine under heavy load or in high temperatures

Important Refer to your engine operator's manual for additional maintenance procedures.

Caution

If you leave the key in the ignition switch, someone could accidently start the engine and seriously injure you or other bystanders.

Remove the key from the ignition and disconnect the wire from the spark plug before you do any maintenance. Set the wire aside so that it does not accidentally contact the spark plug.

Servicing the Engine Oil

Check the oil level daily or after every 8 hours.

Change the oil after the first 5 operating hours and every 50 operating hours thereafter.

Oil Type: Detergent oil (API service SF, SG, SH, SJ, or higher)

Crankcase Capacity: 48 oz. (1400 cc/1.4 l) when the filter is not changed; 56 oz. (1700 cc/1.7 l) when the filter is changed

Viscosity: See the table below.

USE THESE SAE VISCOSITY OILS

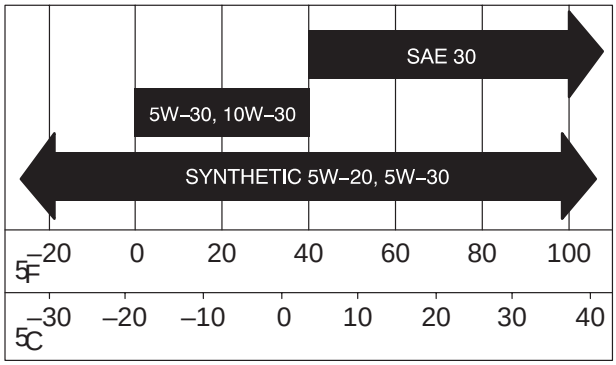

Checking the Oil Level

1. Park the machine on a level surface, disengage the PTO, stop the engine, and remove the key.
2. Clean around the oil dipstick (Fig. 16) so that dirt cannot fall into the fill hole and damage the engine.

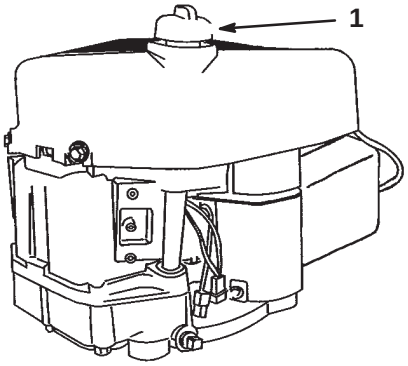

Figure 16

1. Oil dipstick

3. Unscrew the oil dipstick and wipe the metal end clean (Fig. 17).

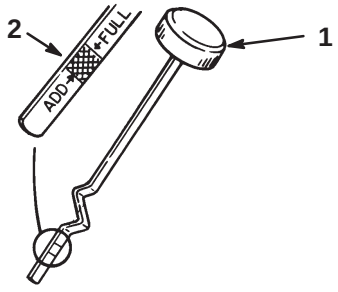

Figure 17

1. Oil dipstick
2. Metal end

4. Screw the oil dipstick fully onto the fill hole. Unscrew the dipstick, pull it out, and look at the metal end. If the oil level is low, slowly pour only enough oil into the fill hole to raise the level to, but not over, the Full mark on the dipstick.

Important Do not overfill the crankcase with oil because the engine may be damaged.

Changing and Draining the Oil

1. Start the engine and let it run five minutes. This warms the oil so it drains better.
2. Park the machine so that the drain side is slightly lower than the opposite side to assure the oil drains completely.
3. Disengage the PTO and set the parking brake.
4. Stop the engine, remove the key, and wait for all moving parts to stop before leaving the operating position.
5. Slide the drain hose over the drain valve.
6. Place a pan below the drain hose. Rotate oil drain valve to allow oil to drain (Fig. 18).
7. When oil has drained completely, close the drain valve.
8. Remove the drain hose (Fig. 18).

Note: Dispose of the used oil at a recycling center.

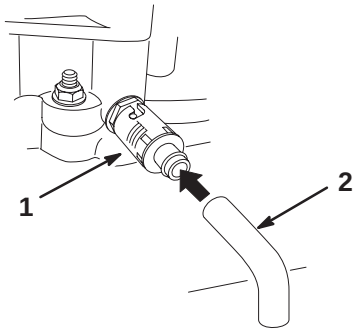

Figure 18

1. Oil drain valve
2. Oil drain tube

9. Change the oil filter, if necessary (Fig. 19).

10. Clean around the oil dipstick and unscrew the cap (Fig. 16).

11. Slowly pour approximately 80% of the specified oil into the filler tube (Fig. 16). Refer to Servicing the Engine Oil, page 22.

12. Check the oil level; refer to Checking the Oil Level, page 22.

13. Slowly add additional oil to bring it to the full mark.

Changing the Oil Filter

Replace the oil filter every 100 hours or every other oil change.

Note: Change the oil filter more frequently when operating conditions are extremely dusty or sandy.

1. Drain the oil from the engine; refer to Changing and Draining the Oil, page 22.

2. Remove the old filter and wipe the filter adapter (Fig. 19) gasket surface.

3. Apply a thin coat of clean oil to the rubber gasket on the replacement filter (Fig. 19).

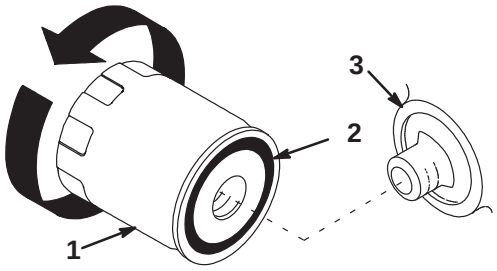

Figure 19

1. Oil filter
2. Gasket
3. Adapter

4. Install the replacement oil filter to the filter adapter. Turn the oil filter clockwise until the rubber gasket contacts the filter adapter; then tighten the filter an additional 1/2 to 3/4 turn (Fig. 19).

5. Fill the crankcase with the proper type of new oil; refer to Changing and Draining the Oil, page 22.

Servicing the Air Cleaner

Foam Element: Clean after every 25 operating hours, or yearly, whichever occurs first.

Paper Element: Replace after every 100 operating hours or yearly, whichever occurs first.

Note: Service the air cleaner more frequently (every few hours) if operating conditions are extremely dusty or sandy.

Removing the Foam and Paper Elements

1. Disengage the PTO, set the parking brake, stop the engine, and remove the ignition key.

2. Clean around the air cleaner to prevent dirt from getting into the engine and causing damage. Pull up on the air cleaner cover handle and rotate it toward the engine (Fig. 20). Remove the air cleaner cover.

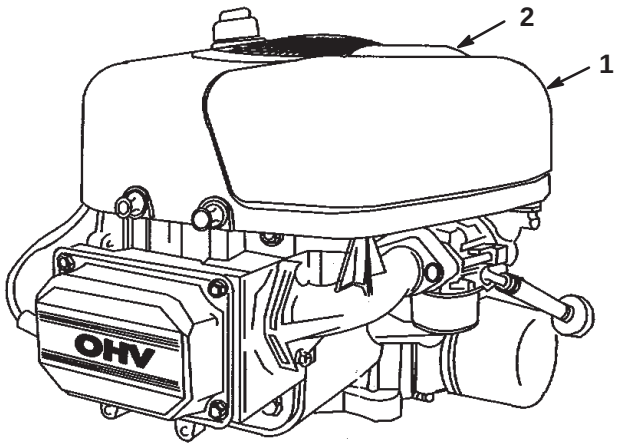

Figure 20

1. Air cleaner cover
2. Air cleaner cover handle

3. Carefully slide the paper element and foam element from the blower housing (Fig. 21).

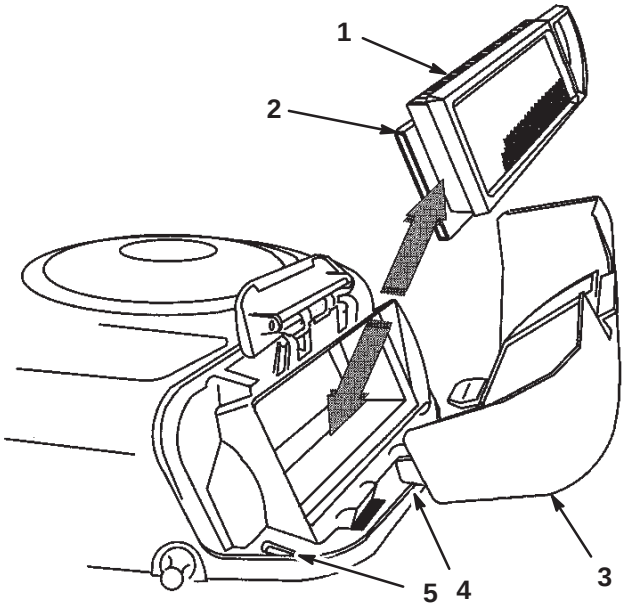

Figure 21

1. Paper element
2. Foam element
3. Air cleaner cover
4. Tab
5. Slot

Cleaning the Foam and Paper Elements

Foam Element:

1. Wash the foam element in liquid soap and warm water. When the element is clean, rinse it thoroughly.

2. Dry the element by squeezing it in a clean cloth. Do **not** oil the element.

Important Replace the foam element if it is torn or worn.

Paper Element:

1. Lightly tap the element on a flat surface to remove dust and dirt.

2. Carefully clean the rubber seal on the paper element to prevent debris from entering the engine.

3. Inspect the element for tears, an oily film, and damage to the rubber seal.

Important Never clean the paper element with pressurized air or liquids, such as solvent, gas, or kerosene. Replace the paper element if it is damaged or cannot be cleaned thoroughly.

Installing the Foam and Paper Elements

Important To prevent engine damage, always operate the engine with the complete foam and paper air cleaner assembly installed.

1. Place the foam element and paper element into the blower housing.

Note: Make sure that the rubber seal is flat against the air cleaner base.

2. Align the tabs on the air cleaner cover with the slots of the blower housing (Fig. 21). Hook the handle onto the cover and press down on the handle to lock the cover in place.

Servicing the Spark Plug

Replace the spark plug after every 100 operating hours. Make sure that the air gap between the center and side electrodes is correct before installing the spark plug. Use a spark plug wrench for removing and installing the spark plug(s) and a gapping tool/feeler gauge to check and adjust the air gap. Install a new spark plug if necessary.

Type: Champion RC12YC (or equivalent)

Air Gap: 0.030 inch (0.76 mm)

Removing the Spark Plug

1. Disengage the PTO, set the parking brake, stop the engine, and remove the key.
2. Pull the wire off of the spark plug (Fig. 22). Clean around the spark plug to prevent dirt from falling into the engine and potentially causing damage.
3. Remove the spark plug and metal washer.

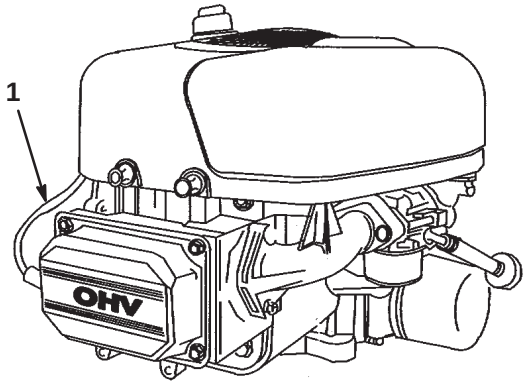

Figure 22

1. Spark plug wire

Checking the Spark Plug

1. Look at the center of the spark plug (Fig. 23). If you see light brown or gray on the insulator, the engine is operating properly. A black coating on the insulator usually means the air cleaner is dirty.

Important Never clean the spark plug. Always replace the spark plug when it has a black coating, worn electrodes, an oily film, or cracks.

2. Check the gap between the center and side electrodes (Fig. 23). Bend the side electrode (Fig. 23) if the gap is not correct.

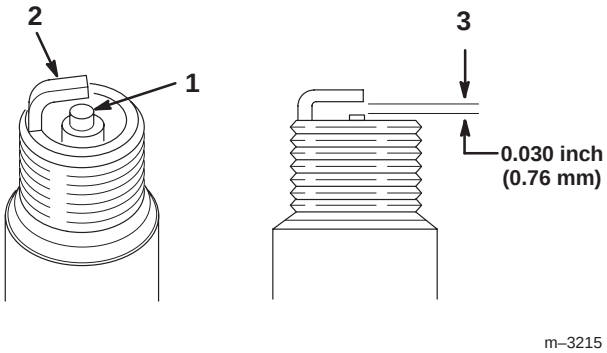

Figure 23

1. Center electrode insulator
2. Side electrode
3. Air gap (not to scale)

Installing the Spark Plug

1. Install the spark plug. Make sure that the air gap is set correctly.
2. Tighten the spark plug to 30 ft.-lb. (41 N·m).
3. Push the wire onto the spark plug (Fig. 22).

Cutting Blades

Maintain sharp blades throughout the cutting season because sharp blades cut cleanly without tearing or shredding the grass blades. Tearing and shredding turns grass brown at the edges, which slows growth and increases the chance of disease.

Check the cutter blades daily for sharpness, and for any wear or damage. File down any nicks and sharpen the blades as necessary. If a blade is damaged or worn, replace it immediately with a genuine Toro replacement blade. For convenient sharpening and replacement, you may want to keep extra blades on hand.

Danger

A worn or damaged blade can break, and a piece of the blade could be thrown into the operator's or bystander's area, resulting in serious personal injury or death.

- **Inspect the blade periodically for wear or damage.**
- **Replace a worn or damaged blade.**

Before Inspecting or Servicing the Blades

Park the machine on a level surface, disengage the PTO, and set the parking brake. Stop the engine, remove the key, and disconnect the spark plug wire(s) from the spark plug(s).

Inspecting the Blades

1. Inspect the cutting edges (Fig. 24). If the edges are not sharp or have nicks, remove and sharpen the blades; refer to Sharpening the Blades, page 26.
2. Inspect the blades, especially the curved area (Fig. 24). If you notice any damage, wear, or a slot forming in this area (item 3 in Fig. 24), immediately install a new blade.

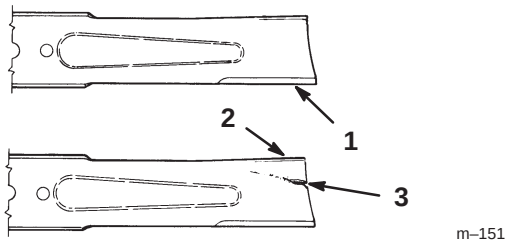

Figure 24

1. Cutting edge
2. Curved area
3. Wear/slot forming

Checking for Bent Blades

1. Stop the engine, set the parking brake, remove the key, and disconnect the spark plug wire(s) from the spark plug(s).

2. Rotate the blades until the ends face forward and backward (Fig. 25). Measure from a level surface to the cutting edge of the blades (Fig. 26). Note this dimension.

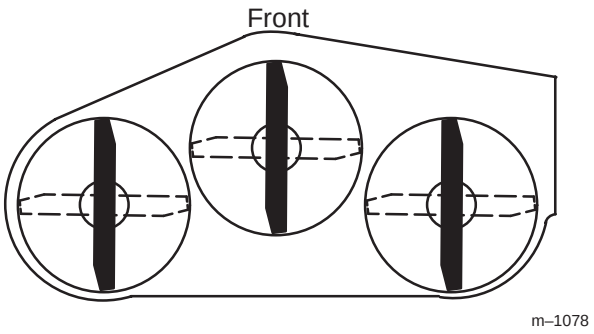

Figure 25

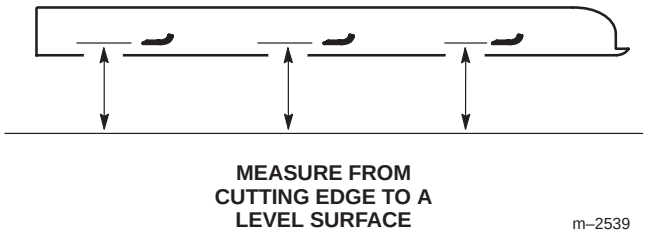

Figure 26

3. Rotate the opposite ends of the blades forward. Measure from a level surface to the cutting edge of the blades at the same position as in step 2 above. The difference between the dimensions obtained in steps 2 and 3 must not exceed 1/8 inch (3 mm). If this dimension exceeds 1/8 inch (3 mm), the blade is bent and must be replaced; refer to Removing the Blades and Installing the Blades, page 27.

Warning

A blade that is bent or damaged could break apart and could seriously injure or kill you or bystanders.

- **Always replace bent or damaged blade with a new blade.**
- **Never file or create sharp notches in the edges or surfaces of blade.**

Removing the Blades

The blades must be replaced if a solid object is hit, if the blade is out of balance, or the blade is bent. To ensure optimum performance and continued safety conformance of the machine, use genuine Toro replacement blades. Replacement blades made by other manufacturers may result in non-conformance with safety standards.

Hold the blade end using a rag or thickly-padded glove. Remove the blade bolt, curved washer, and blade from the spindle shaft (Fig. 27).

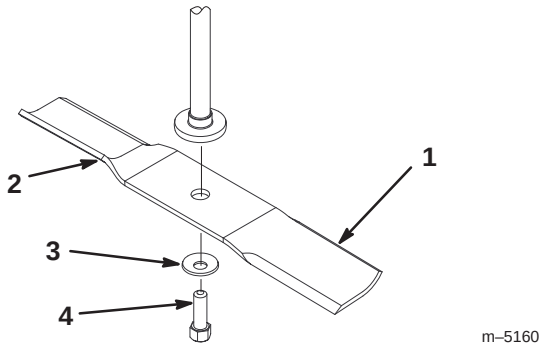

Figure 27

1. Sail area of blade
2. Blade
3. Curved washer
4. Blade bolt

Sharpening the Blades

1. Use a file to sharpen the cutting edge at both ends of the blade (Fig. 28). Maintain the original angle. The blade retains its balance if the same amount of material is removed from both cutting edges.

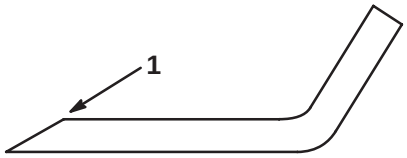

Figure 28

1. Sharpen at original angle

2. Check the balance of the blade by putting it on a blade balancer (Fig. 29). If the blade stays in a horizontal position, the blade is balanced and can be used. If the blade is not balanced, file some metal off the end of the sail area only (Fig. 27). Repeat this procedure until the blade is balanced.

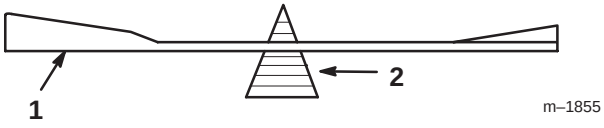

Figure 29

1. Blade 2. Balancer

Installing the Blades

1. Install the blade onto the spindle shaft (Fig. 27).

Important The curved part of the blade must be pointing upward toward the inside of the mower to ensure proper cutting.

2. Install the curved washer (cupped side toward the blade) and blade bolt (Fig. 27). Torque the blade bolt to 35–65 ft.-lb. (47–88 N·m).

Greasing and Lubrication

Lubricate the machine when shown on the Check Service Reference Aid decal (Fig. 30) located beneath the seat. Grease more frequently when operating conditions are extremely dusty or sandy.

Grease with No. 2 general purpose lithium base or molybdenum base grease.

How to Grease

1. Disengage the PTO, stop the engine, and remove the key.
2. Clean the grease fittings with a rag. Make sure to scrape any paint off of the front of the fitting(s).
3. Connect a grease gun to the fitting. Pump grease into the fittings until grease begins to ooze out of the bearings.
4. Wipe up any excess grease.

Where to Add Grease

Lubricate the grease fittings as shown on the Check Service Reference Aid decal (Fig. 30) located beneath the seat.

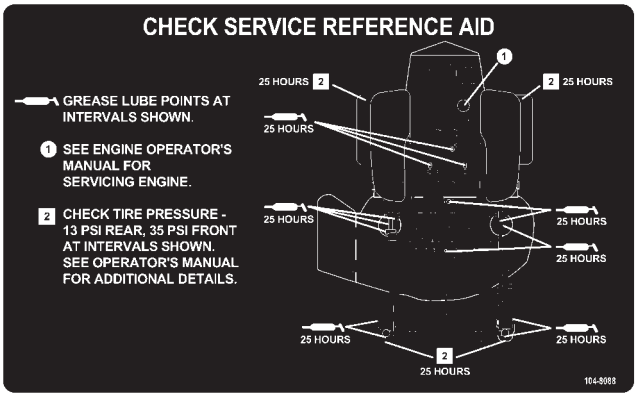

Figure 30

Greasing the Bearings

The cutting unit must be lubricated regularly; refer to the Recommended Maintenance Schedule, page 21. Grease with No. 2 general purpose lithium base or molybdenum base grease.

1. Stop the engine, set the parking brake, remove the key, and disconnect the spark plug wire(s) from the spark plug(s).
2. Grease the fittings on the three spindle bearings (Fig. 31).
3. Grease the idler pulley pivot (Fig. 31).

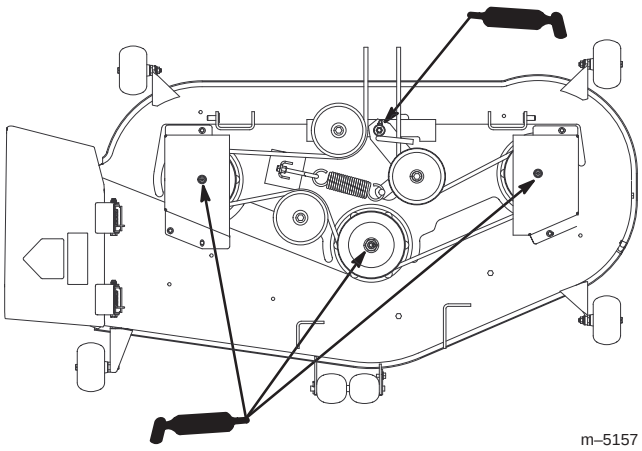

Figure 31

Top View

Servicing the Battery

Warning

CALIFORNIA

Proposition 65 Warning

Battery posts, terminals, and related accessories contain lead and lead compounds, chemicals known to the State of California to cause cancer and reproductive harm. *Wash hands after handling.*

Check the electrolyte level in the battery every 25 hours. Always keep the battery clean and fully charged. Use a paper towel to clean the battery case. If the battery terminals are corroded, clean them with a solution of four parts water and one part baking soda. Apply a light coating of grease to the battery terminals to prevent corrosion.

Voltage: 12 v

Removing the Battery

Warning

Battery terminals or metal tools could short against metal tractor components causing sparks. Sparks can cause the battery gasses to explode, resulting in personal injury.

- **When removing or installing the battery, do not allow the battery terminals to touch any metal parts of the tractor.**
- **Do not allow metal tools to short between the battery terminals and metal parts of the tractor.**

1. Disengage the PTO, set the parking brake, stop the engine, and remove the key.
2. Tip the seat forward to see the battery.
3. Disconnect the negative (black) ground cable from the battery post (Fig. 32).

Warning

Incorrect battery cable routing could damage the tractor and cables causing sparks. Sparks can cause the battery gasses to explode, resulting in personal injury.

- **Always *disconnect* the negative (black) battery cable before disconnecting the positive (red) cable.**
- **Always *connect* the positive (red) battery cable before connecting the negative (black) cable.**

4. Slide the rubber cover up the positive (red) cable. Disconnect the positive (red) cable from the battery post (Fig. 32).
5. Remove the battery hold-down (Fig. 32) and lift the battery from the battery tray.

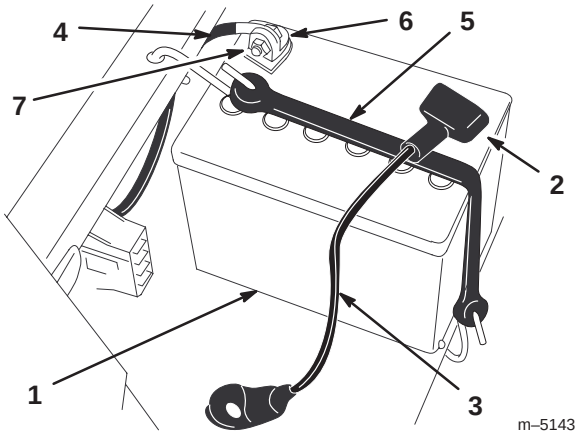

Figure 32

1. Battery
2. Terminal boot
3. Positive battery cable
4. Negative battery cable
5. Battery hold-down
6. Bolt and washer
7. Nut

Installing the Battery

1. Position the battery in the tray with the terminal posts away from the control panel (Fig. 32).
2. Install the positive (red) battery cable to the positive (+) battery terminal.
3. Install the negative battery cable to the negative (–) battery terminal.

4. Secure the cables with 2 bolts (1/4 x 3/4 inch), washers (1/4 inch), and nuts (1/4 inch) (Fig. 32).
5. Slide the red terminal boot onto the positive (red) battery post.
6. Secure the battery with the hold-down (Fig. 32).

Checking the Electrolyte Level

Danger

Battery electrolyte contains sulfuric acid which is a deadly poison and causes severe burns.

- **Do not drink electrolyte and avoid contact with skin, eyes or clothing. Wear safety glasses to shield your eyes and rubber gloves to protect your hands.**
- **Fill the battery where clean water is always available for flushing the skin.**

1. Tip the seat forward to see the battery.
2. Look at the side of the battery. The electrolyte must be up to the Upper line (Fig. 33). Do not allow the electrolyte to fall below the Lower line (Fig. 33).

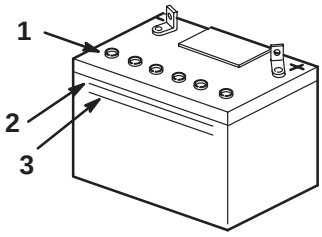

m–5004

Figure 33

1. Vent caps
2. Upper line
3. Lower line

3. If the electrolyte is low, add the required amount of distilled water; refer to Adding Water to the Battery, page 29.

Adding Water to the Battery

The best time to add distilled water to the battery is just before you operate the machine. This lets the water mix thoroughly with the electrolyte solution.

1. Remove the battery from the tractor; refer to Removing the Battery, page 28.

Important Never fill the battery with distilled water while the battery installed in the tractor. Electrolyte could be spilled on other parts and cause corrosion.

2. Clean the top of the battery with a paper towel.
3. Remove the vent caps from the battery (Fig. 33).
4. Slowly pour distilled water into each battery cell until the electrolyte level is up to the Upper line (Fig. 33) on the battery case.

Important Do not overfill the battery because electrolyte (sulfuric acid) can cause severe corrosion and damage to the chassis.

5. Wait five to ten minutes after filling the battery cells. Add distilled water, if necessary, until the electrolyte level is up to the Upper line (Fig. 33) on the battery case.
6. Reinstall the battery vent caps.

Charging the Battery

Important Always keep the battery fully charged (1.260 specific gravity). This is especially important to prevent battery damage when the temperature is below 32°F (0°C).

1. Remove the battery from the chassis; refer to Removing the Battery, page 28.
2. Check the electrolyte level; refer to Checking the Electrolyte Level, page 29.
3. Make sure that the vent caps are installed in the battery. Charge the battery for 1 hour at 25 to 30 amps or 6 hours at 4–6 amps. Do not overcharge the battery.
4. When the battery is fully charged, unplug the charger from the electrical outlet, then disconnect the charger leads from the battery posts (Fig. 34).

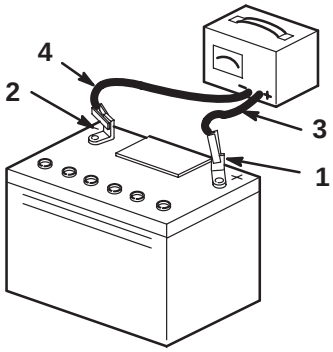

m–4970

Figure 34

1. Positive battery post
2. Negative battery post
3. Red (+) charger lead
4. Black (–) charger lead

5. Install the battery in the tractor and connect the battery cables; refer to Installing the Battery, page 28.

Note: Do not run the tractor with the battery disconnected, electrical damage may occur.

Draining the Fuel Tank

Danger

In certain conditions, gasoline is extremely flammable and highly explosive. A fire or explosion from gasoline can burn you and others and can damage property.

- **Drain gasoline from the fuel tank when the engine is cold. Do this outdoors in an open area. Wipe up any gasoline that spills.**
- **Never smoke when draining gasoline, and stay away from an open flame or where a spark may ignite the gasoline fumes.**

1. Park the machine on a level surface to ensure that the fuel tank drains completely. Then disengage the PTO, set the parking brake, stop the engine, and remove the key.
2. Close the fuel shut-off valve located under the front of the fuel tank.
3. Loosen the hose clamp at the fuel filter and slide it up the fuel line away from the fuel filter (Fig. 35).
4. Pull the fuel line off of the fuel filter (Fig. 35).

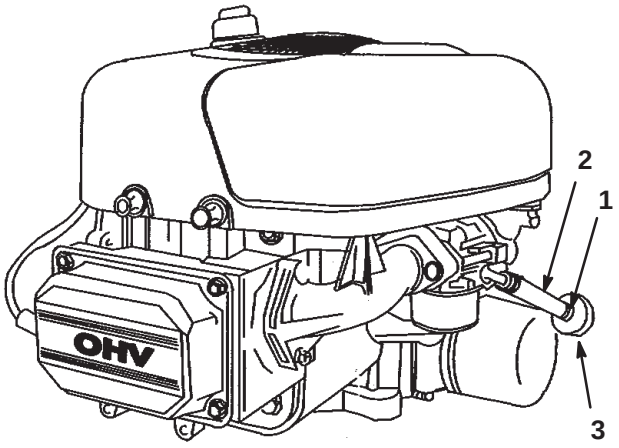

Figure 35

1. Hose clamp
2. Fuel line
3. Filter

5. Open the fuel shut-off valve. Allow gasoline to drain into a gas can or drain pan.

Note: Now is the best time to install a new fuel filter because the fuel tank is empty.

6. Install the fuel line onto the fuel filter. Slide the hose clamp close to the fuel filter to secure the fuel line (Fig. 35).

Replacing the Fuel Filter

Replace the fuel filter after every 100 operating hours or yearly, whichever occurs first.

Never install a dirty filter if it is removed from the fuel line.

1. Disengage the PTO, set the parking brake, stop the engine, and remove the key.
2. Close the fuel shut-off valve located under the front of the fuel tank.
3. Squeeze the ends of the hose clamps together and slide them away from the filter (Fig. 35).
4. Remove the filter from the fuel lines.
5. Install a new filter and move the hose clamps close to the filter (Fig. 35).
6. Open the fuel shut-off valve.

Tire Pressure

Maintain the air pressure in the front and rear tires as specified. Uneven tire pressure can cause uneven cut. Check the pressure at the valve stem after every 50 operating hours or monthly, whichever occurs first (Fig. 36). Check the tires when they are cold to get the most accurate pressure reading.

Rear Tires: 13 psi (90 kPa)

Front Tires (castor wheels): 35 psi (139 kPa)

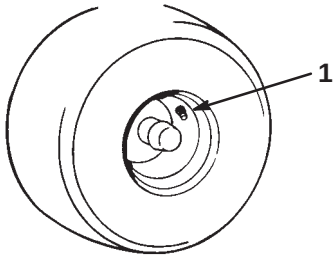

m–1872

Figure 36

1. Valve stem

Leveling the Mower from Side-to-Side

The mower blades must be level from side to side. Check the side-to-side level any time you install the mower or when you see an uneven cut on your lawn.

1. Position the mower on a flat surface. Disengage the PTO, set the parking brake, stop the engine, and remove the key. Disconnect the spark plug wire(s) from the spark plug(s).

2. Check the air pressure of all four tires. If needed, adjust to the recommended inflation; refer to Tire Pressure, page 30.

3. Set the height-of-cut at 3 inch (76 mm).

4. Carefully rotate the blade(s) from side to side (Fig. 37). Measure between the outside cutting edges and the flat surface (Fig. 37). If both measurements are not within 3/16 inch (4.75 mm), an adjustment is required; refer to steps 5 and 6.

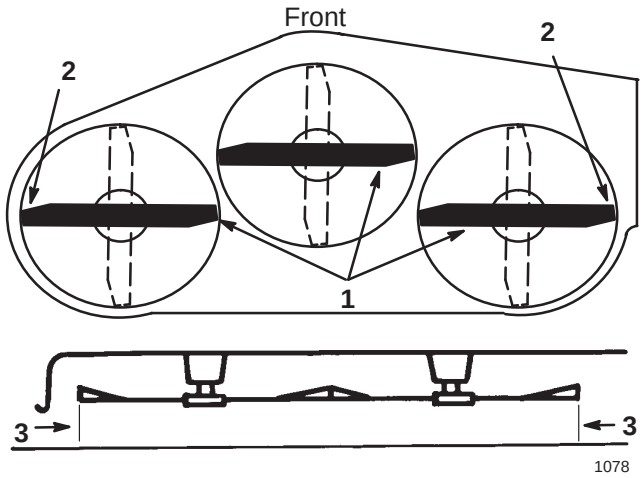

Figure 37

1. Blades side to side
2. Outside cutting edges
3. Measure here

5. Remove the hairpin cotter and washer from the leveling bracket (Fig. 38). To level the blade(s), reposition the leveling bracket(s) in a different hole and install the washer and hairpin cotter. (Fig. 38). A front hole lowers the blade height and a rear hole raises its height. Adjust both sides as required.

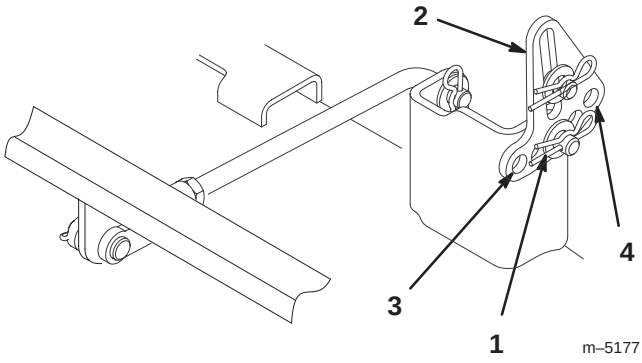

Figure 38

1. Hairpin cotter and washer
2. Leveling bracket
3. Front hole
4. Rear hole

6. Check the front-to-rear blade slope; refer to Adjusting the Front-to-Rear Blade Slope, page 31.

Adjusting the Front-to-Rear Blade Slope

Check the front-to-rear blade level any time you install the mower. If the front of the mower is more than 5/16 inch (7.9 mm) lower than the rear of the mower, adjust the blade level using the following instructions:

1. Position the mower on a flat surface. Disengage the PTO, set the parking brake, stop the engine, and remove the key. Disconnect the spark plug wire(s) from the spark plug(s).

2. Check the air pressure of all four tires. If needed, adjust to the recommended inflation; refer to Tire Pressure, page 30.

3. Check and adjust the side-to-side blade level if you have not checked the setting; refer to Leveling the Mower from Side-to-Side, page 30.

4. Measure the length of the rear trunion rod (Fig. 39). If the rod length is not 11-1/2 inch (29.2 cm), remove the clevis pin and cotter pin from the end of the rod (Fig. 39), loosen the jam nut, and turn the yoke until the 11-1/2 inch (29.3 cm) dimension is obtained. Then secure the yoke with the clevis pin and cotter pin. Repeat this procedure on the opposite side of the mower.

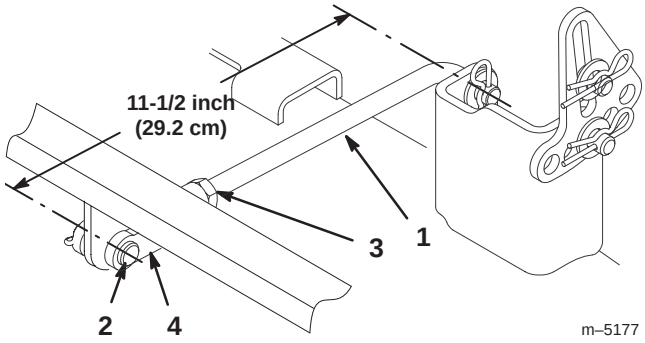

Figure 39

1. Rear trunion rod
2. Clevis pin and cotter pin
3. Jam nut
4. Yoke

5. Set the height-of-cut at 3 inch (76 mm) and carefully rotate the blades so they are facing front to rear (Fig. 40).

6. Measure between the tip of the front blade (Fig. 40) and the tip of the rear blade to the flat surface. If the front blade tip is not 1/16–5/16 inch (1.6–7.9 mm) lower than the rear blade tip, adjust the front trunion rods.

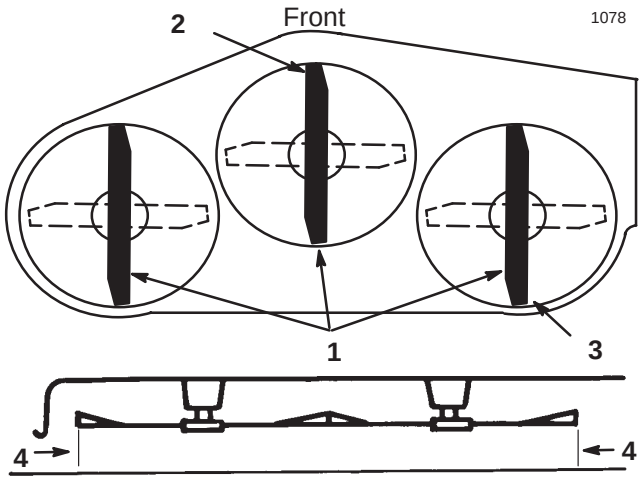

Figure 40

1. Blade front to rear
2. Measure front blade tip
3. Measure rear blade tip
4. Measure here

7. To adjust the front-to-rear blade slope, remove the hairpin cotter from the front trunion yokes and loosen the jam nuts (Fig. 41).

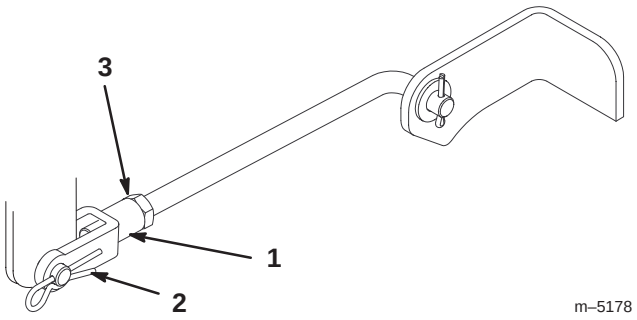

Figure 41

1. Front trunion rod yoke
2. Hairpin cotter
3. Jam nut

8. Rotate the yokes on the rods to change the adjustment (Fig. 41). To raise the front of the mower, tighten the yokes (shorten the rods). To lower the front of the mower, loosen the yokes (lengthen the rods).

9. After adjusting both trunion rod yokes evenly, secure the yokes with the hairpin cotters. Check the front-to-rear level again. Continue adjusting the yokes until the front blade tip is 1/16–5/16 inch (1.6–7.9 mm) lower than the rear blade tip (Fig. 40).

10. When the front-to-rear blade slope is correct, tighten the jam nuts (Fig. 39 and 41).

11. Recheck the side-to-side level of the mower; refer to Leveling the Mower from Side-to-Side, page 30.

12. Check the height of the anti-scalp rollers; refer to Adjusting the Anti-Scalp Rollers, page 18.

Inspecting the Belts

Inspect all belts every 100 hours.

Check the belts for cracks, frayed edges, burn marks, or any other damage. Replace damaged belts.

Replacing the Mower Belt

Squealing when the belt is rotating, blades slipping when cutting grass, frayed belt edges, burn marks, and cracks are signs of a worn mower belt. Replace the mower belt if any of these conditions are evident.

1. Stop the engine, set the parking brake, remove the key, and disconnect the spark plug wire(s) from the spark plug(s).

2. Set the height-of-cut at 1-1/2 inch (38 mm).

3. Remove the belt covers over the outside spindles.

4. Pull the idler pulley in the direction shown in Figure 42 and roll the belt off of the pulleys.

Note: Do not remove the spring.

Caution

The spring is under tension when installed and can cause personal injury.

Do not remove the spring from the spring eye bolt.

5. Route the new belt through the idler arm and around the idler pulley (Fig. 42).

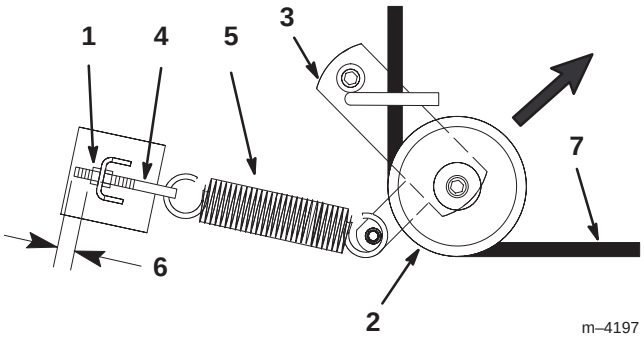

Figure 42

Top View

1. Outer nut
2. Idler pulley
3. Idler arm
4. Spring eye bolt
5. Spring
6. 1/8 inch ⟨3 mm)
7. Mower belt

6. Pull the idler pulley in the direction shown in Figure 42 and route the belt onto the other pulleys (Fig. 43).

Note: Check to ensure that the length of exposed thread on the spring eye bolt is 1/8 inch (3 mm) (Fig. 42).

7. Install the belt covers over the outside spindles.

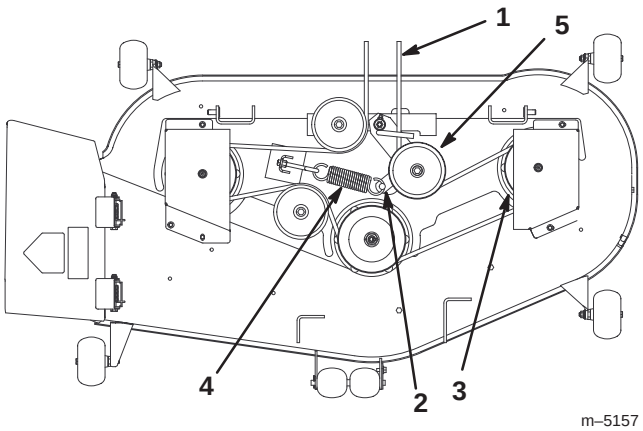

Figure 43

Top View

1. Mower belt
2. Idler arm
3. Outside pulley
4. Spring
5. Idler pulley

Removing the Mower

1. Park the machine on a level surface, disengage the PTO, set the parking brake, stop the engine, and remove the key. Disconnect the spark plug wire(s) from the spark plug(s).

2. Lower the height-of-cut lever to the lowest position.

3. Remove the hairpin cotter and clevis pin from the front trunion yokes (Fig. 44).

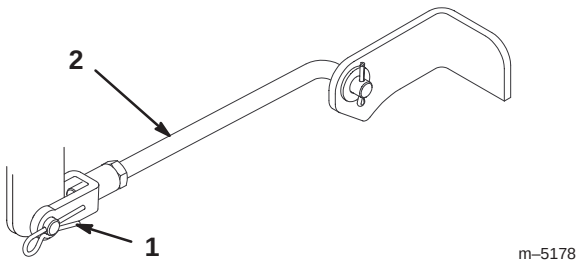

Figure 44

1. Hairpin cotter and clevis pin
2. Front trunion

4. Remove the hairpin cotter and washer from the rear trunion rod (Fig. 45) on each side of the mower.

5. Remove the hairpin cotter and washer at the mower leveling brackets (Fig. 45) on each side of the mower. Note which hole the leveling bracket is mounted in for future installation. Slide the brackets off of the mounting pin.

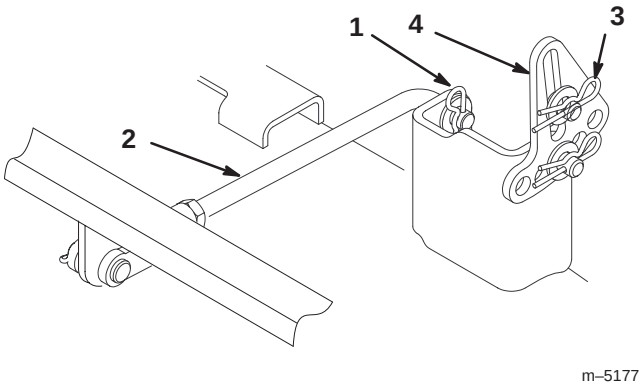

Figure 45

1. Hairpin cotter and washer
2. Rear trunion rod
3. Hairpin cotter and washer
4. Leveling bracket

6. Slide the mower rearward to remove the mower belt from the engine pulley.

7. Slide the mower out from underneath the tractor.

Note: Retain all parts for future installation.

Installing the Mower

1. Park the machine on a level surface, disengage the PTO, set the parking brake, stop the engine, and remove the key. Disconnect the spark plug wire(s) from the spark plug(s).

2. Slide the mower under the tractor.

3. Lower the height-of-cut lever to the lowest position.

4. Attach the rear trunion rod to the tractor with the washer and hairpin cotter (Fig. 45) on each side of the mower.

5. Slide the leveling brackets onto the mounting pins and secure them with the washers and hairpin cotters (Fig. 45).

6. Attach the front trunion rods to the tractor with the clevis pins and hairpin cotters (Fig. 44).

7. Install the mower belt onto the engine pulley; refer to Replacing the Mower Belt, page 32.

Fuse

The electrical system is protected by fuses. It requires no maintenance; however, if a fuse blows, check the component/circuit for a malfunction or short.

Fuse: Main F1—30 amp, blade-type
Charge Circuit F2—25 amp, blade-type
Optional Headlight Kit—10 amp, blade type

1. Raise the seat to gain access to the fuse holder (Fig. 46).
2. To replace a fuse, pull out on the fuse to remove it (Fig. 46).

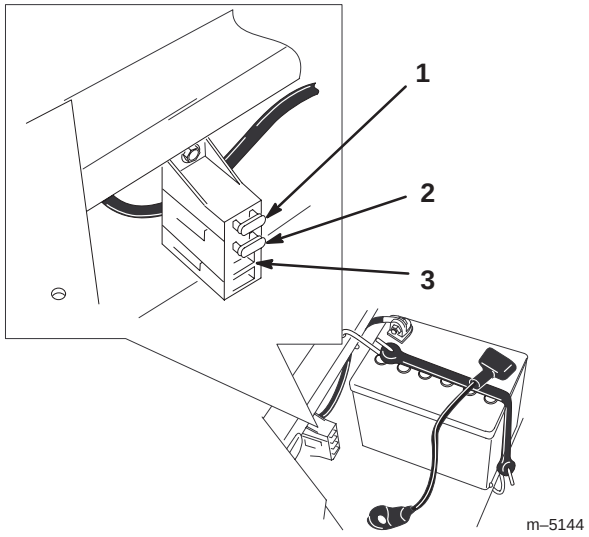

Figure 46

1. Main—30 amp
2. Charge circuit—25 amp
3. For optional Headlight Kit—10 amp

Washing the Underside of the Mower

After each use, wash the underside of the mower to prevent grass buildup for improved mulch action and clipping dispersal.

1. Park the machine on a hard level surface, disengage the PTO, stop the engine, and remove the ignition key.
2. Attach the hose coupling to the end of the mower washout fitting, and turn the water on high (Fig. 47).

Note: Spread petroleum jelly on the washout fitting o-ring to make the coupling slide on easier and protect the o-ring.

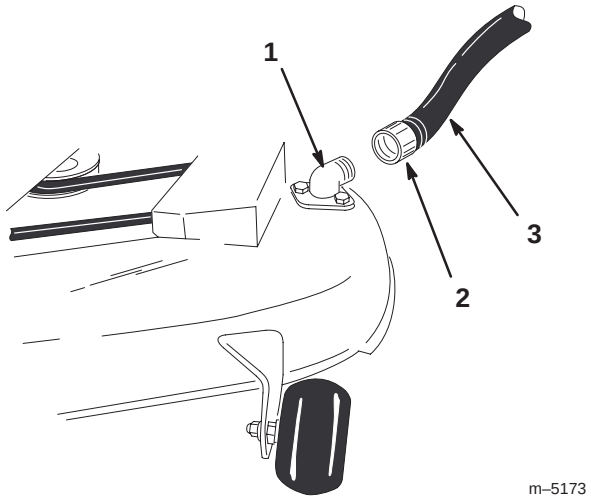

Figure 47

1. Washout fitting
2. Coupling
3. Hose

3. Lower the mower to the lowest height-of-cut.
4. Sit on the seat and start the engine. Engage the PTO and let the mower run for one to three minutes.
5. Disengage the PTO, stop the engine, and remove the ignition key. Wait for all moving parts to stop.
6. Turn the water off and remove the coupling from the washout fitting.

Note: If the mower is not clean after one washing, soak it and let it stand for 30 minutes. Then repeat the process.

7. Run the mower again for one to three minutes to remove excess water.

Warning

A broken or missing washout fitting could expose you and others to thrown objects or blade contact. Contact with blade or thrown debris contact will cause injury or death.

- **Replace broken or missing washout fitting immediately, before using mower again.**
- **Plug any hole(s) in mower with bolts and locknuts.**
- **Never put your hands or feet under the mower or through openings in the mower.**

Replacing the Grass Deflector

Warning

An uncovered discharge opening could allow the lawn mower to throw objects in the operator's or bystander's direction and result in serious injury. Also, contact with the blade could occur.

Never operate the lawn mower unless you install a cover plate, a mulch plate, or a grass chute and catcher.

1. Remove the locknut, bolt, and spring holding the deflector to the mower brackets (Fig. 48). Remove the damaged or worn grass deflector.

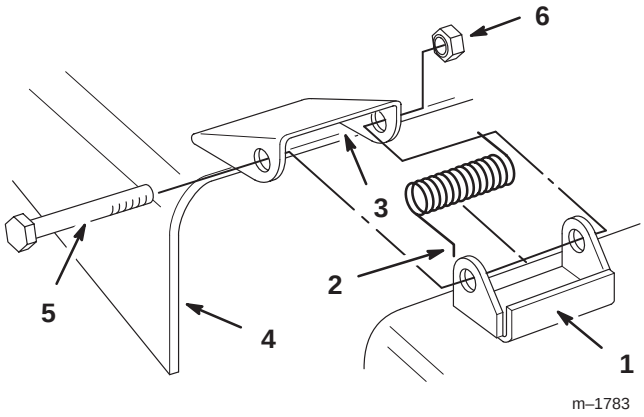

Figure 48

1. Mower bracket
2. Spring hook end
3. Space for spring
4. Grass deflector
5. Bolt
6. Locknut

2. Place the springs into the brackets on the mower with the hooked ends over the raised back (Fig. 48).

3. Align the grass deflector with the holes in the brackets and the spring straight ends in the space under the hinge and above the deflector (Fig. 48).

4. Secure the deflector to the mower bracket with the bolts. The bolts should pass through the grass deflector, springs, and brackets.

Note: It may be helpful to press down near the end of the bolt with a 9/16 inch open end wrench to align the bolts with the second holes on the mower bracket and grass deflector.

5. Lift the grass deflector and check that it is spring loaded and pivots freely to the full down position.

Important The grass deflector must be spring loaded in the down position. Lift the deflector up to test that it snaps to the full down position.

Wiring Diagram

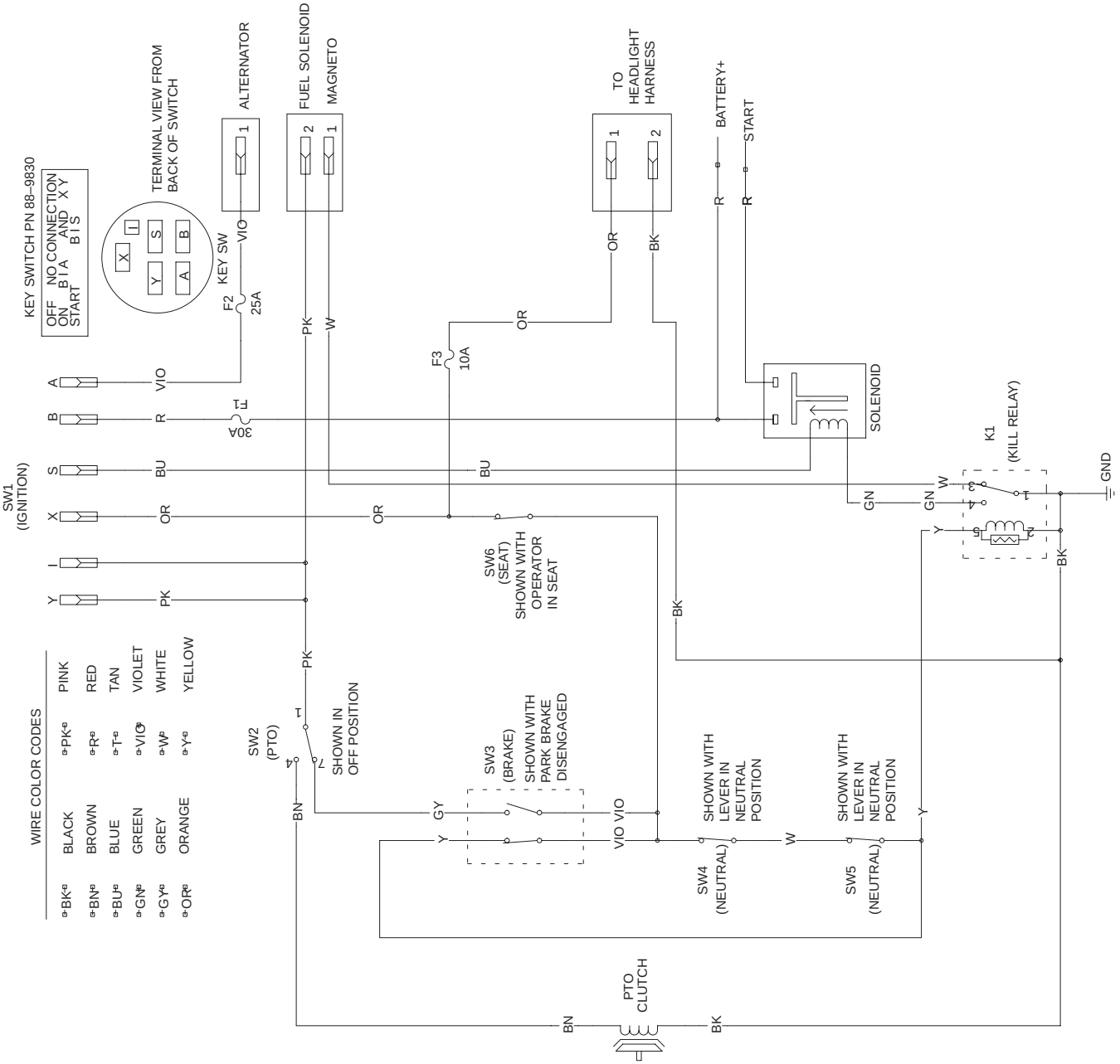

Cleaning and Storage

1. Disengage the PTO, set the parking brake, stop the engine, and remove the key.
2. Remove grass clippings, dirt, and grime from the external parts of the entire machine, especially the engine. Clean dirt and chaff from the outside of the engine cylinder head fins and blower housing.

Important You can wash the machine with mild detergent and water. Do not pressure wash the machine. Avoid excessive use of water, especially near the control panel, engine, hydraulic pumps, and motors.

3. Service the air cleaner; refer to Air Cleaner, page 23.
4. Grease and oil the machine; refer to Greasing and Lubrication, page 27.
5. Change the crankcase oil and filter; refer to Engine Oil, page 22.
6. Check the tire pressure; refer to Tire Pressure, page 30.
7. Charge the battery; refer to Servicing the Battery, page 28.
8. Check the condition of the blades; refer to Cutting Blades, page 25.
9. Prepare the machine for storage when non-use occurs over 30 days. Prepare the machine for storage as follows.
10. Add a petroleum based stabilizer/conditioner to the fuel in the tank. Follow the mixing instructions from the stabilizer manufacturer (1 oz. per gallon or 7.8 ml per liter). **Do not use an alcohol based stabilizer (ethanol or methanol).**

Note: A fuel stabilizer/conditioner is most effective when mixed with fresh gasoline and used at all times.

A. Run the engine to distribute the conditioned fuel through the fuel system (5 minutes).

B. Stop the engine, allow it to cool, and drain the fuel tank; refer to Draining the Fuel Tank, page 30.

C. Restart the engine and run it until it stops.

D. Choke or prime the engine. Start and run the engine until it will not start. Operate the primer, if equipped, several times to ensure no fuel remains in the primer system.

E. Dispose of fuel properly. Recycle as per local codes.

Important Do not store stabilizer/conditioned gasoline over 90 days.

11. Remove the spark plug(s) and check its condition; refer to Spark Plug, page 24. With the spark plug(s) removed from the engine, pour two tablespoons of engine oil into the spark plug hole. Use the starter to crank the engine and distribute the oil inside the cylinder. Install the spark plug(s). Do not install the wire on the spark plug(s).
12. Clean any dirt and chaff from the top of the mower.
13. Scrape any heavy buildup of grass and dirt from the underside of the mower, then wash the mower with a garden hose.
14. Check the condition of the drive and mower belts.
15. Check and tighten all bolts, nuts, and screws. Repair or replace any part that is worn or damaged.
16. Paint all scratched or bare metal surfaces. Paint is available from your Authorized Service Dealer.
17. Store the machine in a clean, dry garage or storage area. Remove the key from the ignition switch and keep it in a memorable place. Cover the machine to protect it and keep it clean.

Troubleshooting

Problem	Possible Causes	Corrective Action
The engine overheats.	1. The engine load is excessive.	1. Reduce ground speed.
	2. The oil level in the crankcase is low.	2. Add oil to the crankcase.
	3. The cooling fins and air passages under the engine blower housing are plugged.	3. Remove the obstruction from the cooling fins and air passages.
	4. The air cleaner is dirty.	4. Clean or replace the air cleaner element.
	5. Dirt, water, or stale fuel is in fuel system.	5. Contact an Authorized Service Dealer.

Problem	Possible Causes	Corrective Action
The starter does not crank.	6. The blade control (PTO) is engaged. 7. The parking brake is not on. 8. The operator is not seated. 9. The battery is dead. 10. The electrical connections are corroded or loose. 11. A fuse is blown. 12. A relay or switch is damaged.	6. Move the PTO to Disengaged. 7. Set the parking brake. 8. Sit on the seat. 9. Charge the battery. 10. Check the electrical connections for good contact. 11. Replace the fuse. 12. Contact an Authorized Service Dealer.
The engine will not start, starts hard, or fails to keep running.	1. The fuel tank is empty. 2. The fuel valve turned off. 3. The choke is not on. 4. The air cleaner is dirty. 5. The spark plug wire(s) is loose or disconnected. 6. The spark plug(s) is pitted, fouled, or the gap is incorrect. 7. There is dirt in fuel filter. 8. Dirt, water, or stale fuel is in fuel system. 9. There is incorrect fuel in the fuel tank. 10. The oil level in the crankcase is low.	1. Fill the fuel tank. 2. Open the fuel valve. 3. Move the choke lever to On. 4. Clean or replace the air cleaner element. 5. Install the wire(s) on the spark plug. 6. Install a new, correctly gapped spark plug(s). 7. Replace the fuel filter. 8. Contact an Authorized Service Dealer. 9. Drain the tank and replace the fuel with the proper type. 10. Add oil to the crankcase.
The engine loses power.	1. The engine load is excessive. 2. The air cleaner is dirty. 3. The oil level in the crankcase is low. 4. The cooling fins and air passages under the engine blower housing are plugged. 5. The spark plug(s) is pitted, fouled, or the gap is incorrect. 6. The vent in the fuel cap is closed. 7. There is dirt in the fuel filter. 8. Dirt, water, or stale fuel is in the fuel system. 9. There is incorrect fuel in the fuel tank.	1. Reduce ground speed. 2. Clean the air cleaner element. 3. Add oil to the crankcase. 4. Remove the obstruction from the cooling fins and air passages. 5. Install a new, correctly gapped spark plug(s). 6. Open the vent in the fuel cap. 7. Replace the fuel filter. 8. Contact an Authorized Service Dealer. 9. Drain the tank and replace the fuel with the proper type.

Problem	Possible Causes	Corrective Action
The machine does not drive.	1. The traction belt is worn, loose, or broken. 2. The traction belt is off of the pulley.	1. Contact an Authorized Service Dealer. 2. Contact an Authorized Service Dealer.
There is abnormal vibration.	1. The engine mounting bolts are loose. 2. The engine pulley, idler pulley, or blade pulley is loose. 3. The engine pulley is damaged. 4. The cutting blade(s) is/are bent or unbalanced. 5. A blade mounting bolt is loose. 6. A blade spindle is bent.	1. Tighten the engine mounting bolts. 2. Tighten the appropriate pulley. 3. Contact an Authorized Service Dealer. 4. Install a new cutting blade(s). 5. Tighten the blade mounting bolt. 6. Contact an Authorized Service Dealer.
Uneven cutting height.	1. The blade(s) is not sharp. 2. A cutting blade(s) is/are bent. 3. The mower is not level. 4. An anti-scalp wheel is not set correctly. 5. The underside of the mower is dirty. 6. The tire pressure is incorrect. 7. A blade spindle is bent.	1. Sharpen the blade(s). 2. Install a new cutting blade(s). 3. Level the mower from side-to-side and front-to-rear. 4. Adjust the anti-scalp wheel height. 5. Clean the underside of the mower. 6. Adjust the tire pressure. 7. Contact an Authorized Service Dealer.
The blades do not rotate.	1. The drive belt is worn, loose or broken. 2. The drive belt is off of the pulley. 3. The mower belt is worn, loose, or broken.	1. Install a new drive belt. 2. Install the drive belt and check the adjusting shafts and belt guides for the correct position. 3. Install a new mower belt.

Consumer
TimeCutter

The Toro Total Coverage Guarantee

A Two-Year Full Warranty
(Limited Warranty for Commercial Use)

Conditions and Products Covered

The Toro Company and its affiliate, Toro Warranty Company, pursuant to an agreement between them, jointly promise to repair any Toro Product used for normal residential purposes* if defective in materials or workmanship. The following time periods apply from the date of purchase:

Products	Warranty Period
• All TimeCutter Mowers and Attachments	2 year full warranty
• All Batteries	1 year full warranty

This warranty covers both the cost of parts and labor, and transportation within a fifteen mile radius of the servicing dealer.

This warranty applies to all consumer TimeCutter Mowers and their attachments.

* Normal residential purposes means use of the product on the same lot as your home. Use at more than one location is considered commercial use, and the commercial use warranty would apply.

Limited Warranty for Commercial Use

Toro Consumer Products and attachments used for commercial, institutional, or rental use are warranted against defects in materials or workmanship for the following time periods from the date of purchase:

Products	Warranty Period
• Air Cooled Gas Engines	90 day limited warranty
• All other items	30 day limited warranty

Instructions for Obtaining Warranty Service

If you think that your Toro Product contains a defect in materials or workmanship, follow this procedure:

1. Contact any Toro Authorized or Master Service Dealer to arrange service at their dealership. To locate a dealer convenient to you, refer to the Yellow Pages of your telephone directory (look under “Lawn Mowers”) or access our website at www.Toro.com. U.S. Customers may also call toll free: 866–854–9035 to use our 24-hour Toro dealer locator system.
2. Bring the product and your proof of purchase (sales receipt) to the Service Dealer.

If for any reason you are dissatisfied with the Service Dealer’s analysis or with the assistance provided, contact us at:

Customer Care Department, Consumer Division
Toro Warranty Company
8111 Lyndale Avenue South
Bloomington, MN 55420-1196
Toll Free: 866–216–6029 (U.S. customers)
Toll Free: 866–216–6030 (Canada customers)

Owner Responsibilities

You must maintain your Toro Product by following the maintenance procedures described in the operator’s manual. Such routine maintenance, whether performed by a dealer or by you, is at your expense.

Items and Conditions Not Covered

There is no other express warranty except for special emission system coverage on some products. This express warranty does not cover:

- Cost of regular maintenance service or parts, such as filters, fuel, lubricants, tune-up parts, blade sharpening, brake and clutch adjustments.
- Any product or part which has been altered or misused or required replacement or repair due to normal wear, accidents, or lack of proper maintenance.
- Repairs necessary due to improper fuel, contaminants in the fuel system, or failure to properly prepare the fuel system prior to any period of non-use over three months.
- Pickup and delivery charges for distances beyond a fifteen mile radius from an Authorized Toro Service Dealer.

All repairs covered by this warranty must be performed by an Authorized Toro Service Dealer using Toro approved replacement parts.

General Conditions

Repair by an Authorized Toro Service Dealer is your sole remedy under this warranty.

Neither The Toro Company nor Toro Warranty Company is liable for indirect, incidental or consequential damages in connection with the use of the Toro Products covered by this warranty, including any cost or expense of providing substitute equipment or service during reasonable periods of malfunction or non-use pending completion of repairs under this warranty.

Some states do not allow exclusions of incidental or consequential damages, or limitations on how long an implied warranty lasts, so the above exclusions and limitations may not apply to you.

This warranty gives you specific legal rights, and you may also have other rights which vary from state to state.

Countries Other than the United States or Canada

Customers who have purchased Toro products exported from the United States or Canada should contact their Toro Distributor (Dealer) to obtain guarantee policies for your country, province, or state. If for any reason you are dissatisfied with your Distributor’s service or have difficulty obtaining guarantee information, contact the Toro importer. If all other remedies fail, you may contact us at Toro Warranty Company.

Part No. 374-0061