FORM NO. 3311-652

TORO®

MODEL NO. 38310-1050101 & UP

PARTS CATALOG

TORO POWER SHOVEL

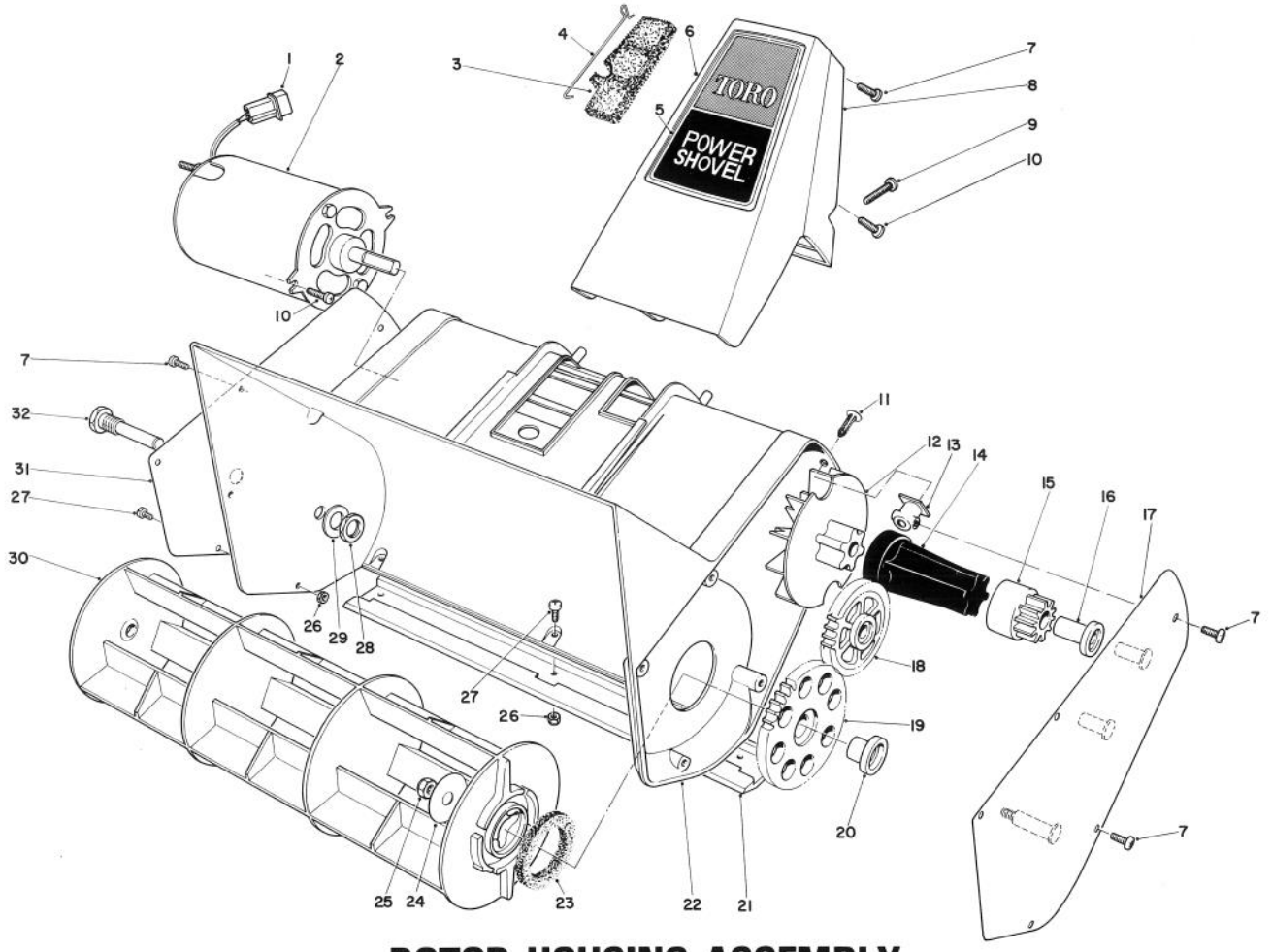

ROTOR HOUSING ASSEMBLY

Ref. No.	Part No.	Description	No. Used
1	218-517	Pin Housing	1
2	41-9920	Motor	1
3	42-0050	Filter – Foam	1
4	42-2910	Retainer – Filters	1
5	41-9840	Decal – Handle Support	1
6	42-2850	Handle Support -- Front	1
7	32104-118	Screw – Pan Head	11
8	42-2860	Handle Support – Back	1
9	3250-20	Screw – Pan Head	2
10	32144-36	Screw – Pan Head	4
11	42-0250	Fastener	2
12	41-9820	Fan	1
13	42-0060	Block – Mounting	2
14	38-8570	Coupling – Drive	1
15	42-0240	Drive Gear (Incl. Ref. #16)	1
16	42-0010	Bushing – Drive Gear	1
17	41-9910	Gear Carrier	1

Ref. No.	Part No.	Description	No. Used
18	41-9940	Idler Gear Assembly	1
19	42-0230	Rotor Gear Assembly (Incl. Ref. #20)	1
20	41-9890	Bushing – Rotor	1
21	41-9830	Scraper	1
22	40-9410	Housing	1
23	38-8580	Washer – Felt	1
24	42-0070	Washer – Rotor	1
25	3296-13	Locknut – Thin	1
26	3296-54	Locknut – Thin	5
27	3250-19	Screw – Pan Head	5
28	32146-21	Nut – Jam	1
29	3256-24	Flat Washer	1
30	38-8170	Rotor	1
31	41-9960	Cover, Right Side	1
32	38-8210	Pin – Rotor	1
*	3290-378	Cable Tie	1

COPYRIGHT © ALL RIGHTS RESERVED
The Toro Company – 1980
MINNEAPOLIS, MN 55420 – U.S.A.

PRICE $1.00

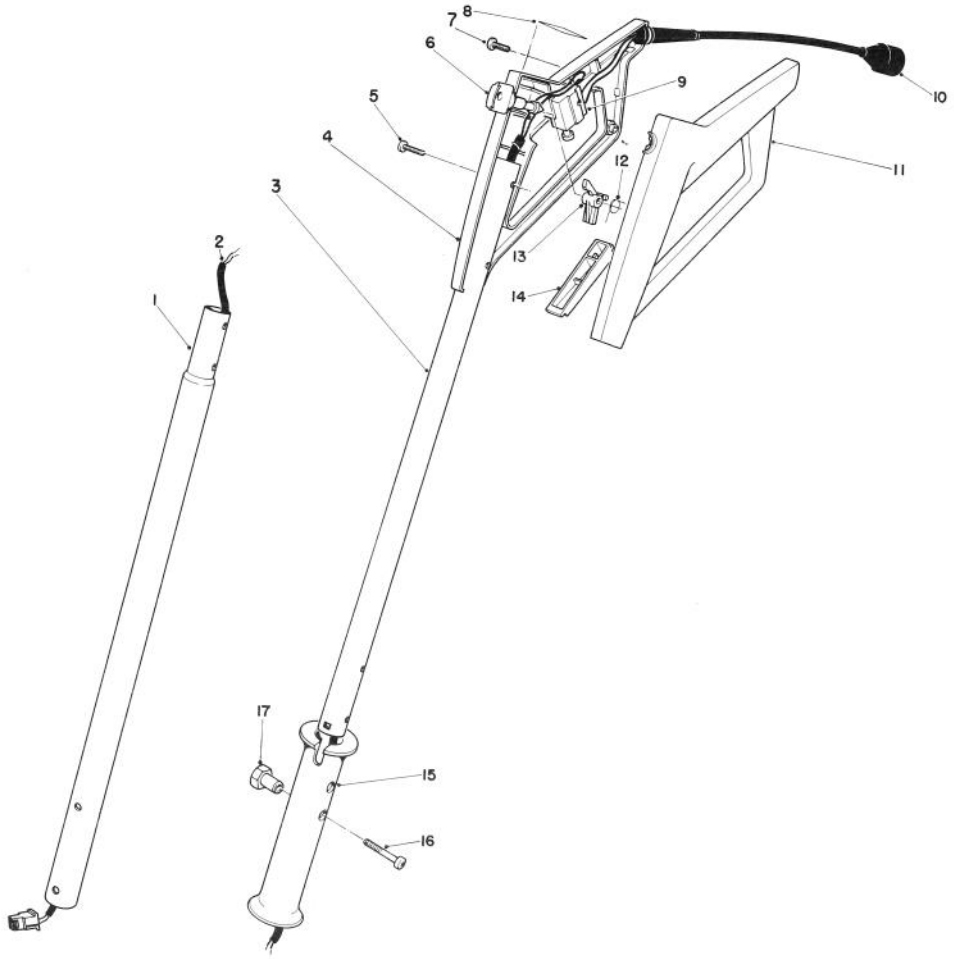

HANDLE ASSEMBLY

Ref. No.	Part No.	Description	No. Used
1	41-9850	Tube – Lower Handle	1
2	42-0020	Wire Harness	1
3	41-9860	Tube – Upper Handle	1
4	42-2830	Grip – Control R.H.	1
5	32104-121	Screw, Pan Head	3
6	38-8310	Key	2
7	32104-118	Screw, Pan Head	2
8	38-8340	Decal – Control Grip	1
9	36-8340	Switch	1

Ref. No.	Part No.	Description	No. Used
10	42-0770	Cord – Supply	1
11	42-2840	Grip – Control, L.H.	1
12	38-8330	Spring	1
13	41-9870	Lockout	1
14	42-2870	Switch Bar	1
15	41-9880	Grip – Handle	1
16	39-3720	Screw – Pan Head Special	2
17	39-3710	Nut – Hex Special	2

The Toro Promise

TORO POWER SHOVEL
A FULL ONE YEAR WARRANTY

The Toro Company promises to repair any TORO Power Shovel if defective in materials or workmanship. The following time periods from the date of purchase apply:

Residential	1 Year
Residential Products Used Commercially . . .	45 Days

The cost of parts and labor are included, but the customer pays the transportation costs. Just return any residential product to an Authorized TORO Service Dealer.

Should you feel your TORO Power Shovel is defective and wish to rely on The Toro Promise, the following procedure is recommended:

1. Contact any Authorized TORO Service Dealer, TORO Master Service Dealer, or TORO Distributor (the Yellow Pages of your telephone directory is a good reference source).

2. He will instruct you to either return the product to him or recommend another Authorized TORO Service outlet which might be more convenient.

3. Bring the product along with your original sales slip, or other evidence of purchase date, to the service dealer.

4. The servicing dealer will inspect the unit, advise you whether the product is defective and, if so, make all repairs necessary to correct the defect without extra charge to you.

If for any reason you are dissatisfied with the dealer's analysis of the defect or the service performed, you may contact us.

Write:

TORO Consumer Service Department
8111 Lyndale Avenue South
Minneapolis, Minnesota 55420

THERE IS NO OTHER EXPRESS WARRANTY.

THE TORO COMPANY IS NOT LIABLE FOR INDIRECT OR CONSEQUENTIAL DAMAGES IN CONNECTION WITH THE USE OF THE PRODUCT.

Some states do not allow the exclusion or limitation of incidental or consequential damages, so the above limitation or exclusion may not apply to you.

This Warranty applies only to parts or components which are defective and does not cover repairs necessary due to normal wear, misuse, accidents, or lack of proper maintenance. Regular, routine maintenance of the unit to keep it in proper operating condition is the responsibility of the owner.

All warranty repairs reimbursable under The Toro Promise must be performed by an Authorized TORO Service Dealer using Toro approved replacement parts.

Repairs or attempted repairs by anyone other than an Authorized TORO Service Account are not reimbursable under The Toro Promise. In addition, these unauthorized repair attempts may result in additional malfunctions, the correction of which is not covered by warranty.

This warranty gives you specific legal rights, and you may also have other rights which vary from state to state.

PRODUCT CHANGES

In an effort to make improvements available to TORO owners as quickly as possible, minor changes are incorporated into Toro's products from time to time that do not become immediately shown in the Parts Catalog. If such a change apparently has been made in your unit, which is not reflected in your manual, see your TORO Distributor or his Authorized TORO Service Dealer for information and part numbers.

IDENTIFICATION AND ORDERING

Model and Serial Numbers

The Power Shovel has two identification numbers: a model number and a serial number. The two numbers are stamped on a decal which is located on bottom side of the lower handle. In any correspondence concerning the Power Shovel, supply model and serial numbers to assure that correct information and replacement parts are obtained.

To order replacement parts from an Authorized TORO Service Dealer, supply the following information:

1. Model and serial numbers of the Power Shovel.

2. Part number, description, and quantity of part(s) desired.

Note: Do not order by reference number if a parts catalog is being used, use the PART NUMBER.

Keep Your TORO All Toro Genuine TORO PARTS & ACCESSORIES ***Insist on Genuine Toro Parts***

MAINTENANCE RECORD

Litho in U.S.A.