Form No. 3463-664 Rev A

TORO®

Count on it.

Parts Catalog

Workman® HDX-D

Utility Vehicle with Bed

Model No. 07385—Serial No. 414959250 and Up

Register at www.Toro.com.
Original Instructions (EN)

3463-664 A

Ordering Replacement Parts

To order replacement parts, please supply the part number, the quantity, and the description of each part desired.

Understanding Reference Numbers

Each identified part in an illustration has a reference number. The reference number for a part also appears in the parts list, along with other information about the part.

This catalog uses two special reference number formats, one to indicate parts in a service assembly and another to indicate the quantity of a given part in an illustration.

Service Assembly Reference Numbers

Parts in service assemblies have reference numbers in the form a:b. The a represents the reference number of the entire service assembly and the b represents a sequential number unique to each part within the service assembly.

For example, a wheel assembly might be identified by reference number 6, the tire by 6:1, the valve by 6:2, and the wheel by 6:3. When you order the assembly identified by reference number 6, you receive all parts identified by reference numbers 6:1,6:2, and 6:3. However, you may also order any part individually. Reference numbers of this type appear in illustration and in parts lists.

Reference Numbers Indicating Quantity

In an illustration, if a reference number indicates more than one part, the reference number has the form nX y. The n represents the quantity of the part, the X is the multiplication symbol, and the y represents the reference number.

For example, in an illustration, the reference number 2X 37 means that two of the parts identified by reference number 37 are indicated.

Contents

Front Frame Assembly . . . 5
Rear Frame and Suspension Assembly . . . 6
Rear Axle Assembly . . . 7
Brake Caliper Assembly No. 127-7424 . . . 8
Front and Rear Brake Line Assembly . . . 9
Front Suspension Assembly . . . 10
Steering and Front Wheel Assembly . . . 11
Steering Linkage Assembly . . . 12
Hydraulic Cylinder Assembly No. 112-3217 . . . 13
Front Control Arm Assembly . . . 14
Brake and Clutch Pedal Assembly . . . 15
Master Cylinder Assembly No. 104-6782 . . . 16
Accelerator Pedal Assembly . . . 17
Console Assembly . . . 18
Shift Assembly No. 106-7887 . . . 20
Bumper, Hood and Seat Base Assembly . . . 21
Dash Assembly . . . 22
Steering Hydraulic Assembly . . . 23
Steering Valve Assembly No. 120-4813 . . . 24
Seat Assembly . . . 25
Roll-Over Protection System Assembly . . . 26
Full Bed and Side Panel Assembly . . . 27
Engine Sub Frame Assembly . . . 28
Engine Assembly . . . 29
Cooling System Assembly . . . 30
Radiator Assembly . . . 31
Clutch Linkage Assembly . . . 32
Transaxle Assembly . . . 33
Case Assembly Transaxle Assembly No. 115-7783 . . . 34
Center Plate Assembly Transaxle Assembly No. 115-7783 . . . 35
Main Shaft Assembly Transaxle Assembly No. 115-7783 . . . 36
Reduction Shaft Assembly Transaxle Assembly No. 115-7783 . . . 37
Reverse Shaft Assembly Transaxle Assembly No. 115-7783 . . . 38
Main Shift Assembly Transaxle Assembly No. 115-7783 . . . 39
Hi-Lo Shift Assembly Transaxle Assembly No. 115-7783 . . . 40
Countershaft Assembly Transaxle Assembly No. 115-7783 . . . 41
Differential Gear Assembly Transaxle Assembly No. 115-7783 . . . 42
Differential Carrier Assembly Transaxle Assembly No. 115-7783 . . . 43
Differential Lock Assembly Transaxle Assembly No. 115-7783 . . . 44
Axle Shaft Assembly Transaxle Assembly No. 115-7783 . . . 45
Battery Assembly . . . 46
Tail Light and Fender Assembly . . . 47
Fuel System Assembly . . . 48
Hydraulic Lift Cylinder Assembly . . . 49
Hydraulic Cylinder Assembly No. 133-0620 . . . 51
Main Hydraulic Pump and Lift Valve Assembly . . . 52
Control Valve Assembly No. 43-1950 . . . 54
Hydraulic Gear Pump Assembly No. 114-8302 . . . 55
Air Cleaner Assembly . . . 56
Air Cleaner Assembly No. 138-5650 . . . 57
Front and Rear Wire Harness Assembly . . . 58
Crankcase Assembly . . . 59
Oil Pan Assembly . . . 60
Cylinder Head Assembly . . . 61

© 2023—The Toro® Company

8111 Lyndale Avenue South
Bloomington, MN 55420

Contact us at www.Toro.com.
Printed in the USA.

All Rights Reserved

Contents (continued)

Gear Case and Oil Filter Cartridge Assembly . . . 62
Cylinder Head Cover Assembly . . . 63
Oil Pump and Dipstick Assembly . . . 64
Main Bearing Case Assembly . . . 65
Camshaft and Idle Gear Shaft Assembly . . . 66
Piston and Crankshaft Assembly . . . 67
Flywheel Assembly . . . 68
Fuel Camshaft Assembly . . . 69
Idle Apparatus Assembly . . . 70
Stop Solenoid and Fuel Pump Cover Assembly . . . 71
Injection Pump Assembly . . . 72
Governor Assembly . . . 73
Speed Control Plate Assembly . . . 74
Nozzle Holder and Glow Plug Assembly . . . 75
Nozzle Holder Assembly . . . 76
Alternator and Pulley Assembly . . . 79
Alternator Components Assembly . . . 80
Starter Installation Assembly . . . 81
Starter Component Assembly . . . 82
Water Flange and Thermostat Assembly . . . 83
Water Pump and Water Pipe Assembly . . . 84
Valve and Rocker Arm Assembly . . . 85
Inlet and Exhaust Manifold Assembly . . . 86
Miscellaneous Engine Parts . . . 87
Attachments and Accessories . . . 88

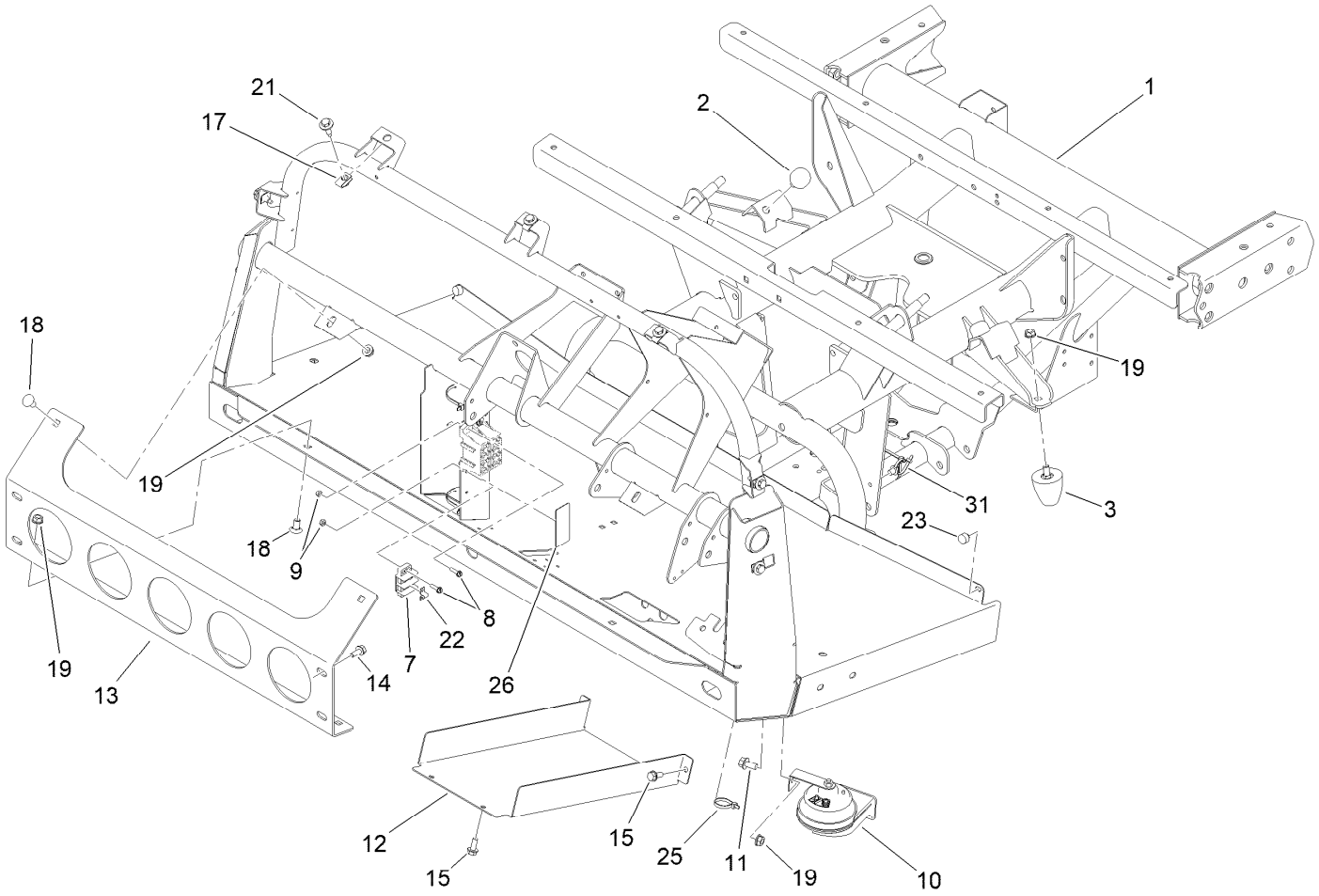

Front Frame Assembly

Ref.	Part Number	Qty.	Description
1	138-9251	1	Frame-Front
2	87-2440	2	Bumper-Rubber
3	26-0071	2	Snubber-Rubber
7	42862	1	Block-Terminal, Ground
8	32105-13	6	Screw-HWH
9	3296-2	6	Nut-Lock, NI
10	110-2594	1	Horn
11	3234-1	1	Screw-HHF
12	106-2427-03	1	Cover
13	114-8272-03	1	Bracket-Bumper
14	3234-5	4	Screw-HHF
15	32144-70	4	Screw-HWHTF
17	94-2413	7	Nut-U
18	3231-21	4	Screw-CARR
19	3290-357	7	Nut-HSF
21	114-8418	7	Screw-HWH, Sems
22	42863	1	Strip-Jumper
23	107-8042	2	Bumper-Rubber
25	3290-379	9	Tie-Cable
26	145-2286	1	Decal-Fuse Block
31	32180-030	2	Clip-Tie

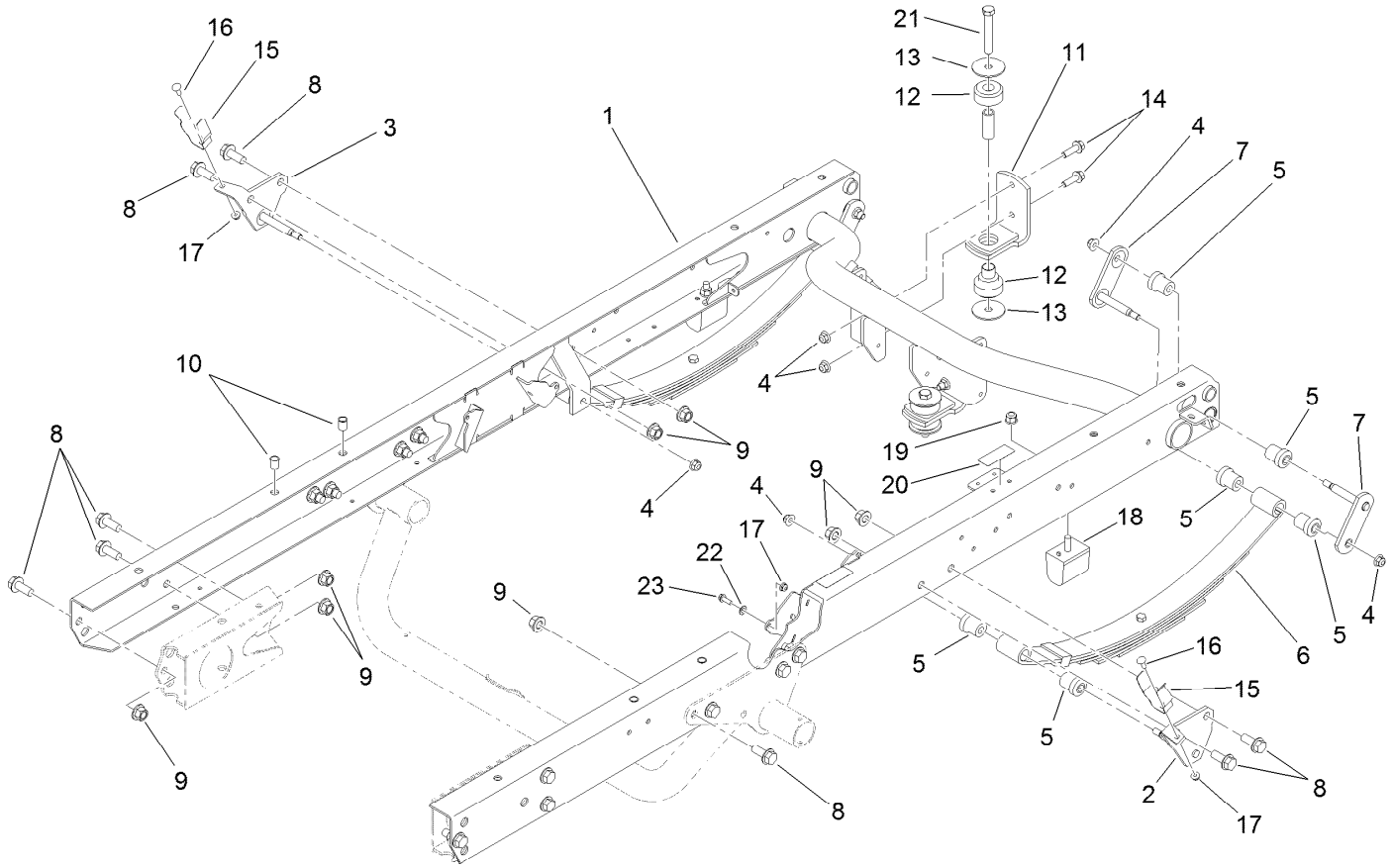

Rear Frame and Suspension Assembly

Ref.	Part Number	Qty.	Description
1	115-2255-03	1	Frame-Rear
2	131-3474	1	Mount-Spring, LH
3	131-3472	1	Mount-Spring, RH
4	104-8301	10	Nut-HF, NI
5	87-4760	12	Bushing-Rubber
6	87-1490	2	Spring-Leaf, Rear
7	131-3476	4	Shackle
8	3234-38	18	Screw-HHF
9	99-5107	18	Nut-Lock
10	32148-9	4	Nut-Clinch
11	87-5800-03	2	Mount-Transaxle
12	106-7865	2	Mount-Engine

Ref.	Part Number	Qty.	Description
13	87-5100	4	Washer-Snubbing
14	3234-24	4	Screw-HHF
15	108-3109	2	Retainer-Cylinder
16	3229-1	2	Screw-CARR
17	104-7201	3	Nut-HF, NI
18	87-3470	2	Bumper
19	103-9511	2	Nut-Lock, NI
20	115-2047	2	Decal-Surface, Hot
21	33116-080	2	Screw-HH
22	119-8952	1	Washer
23	321-3	1	Screw-HH

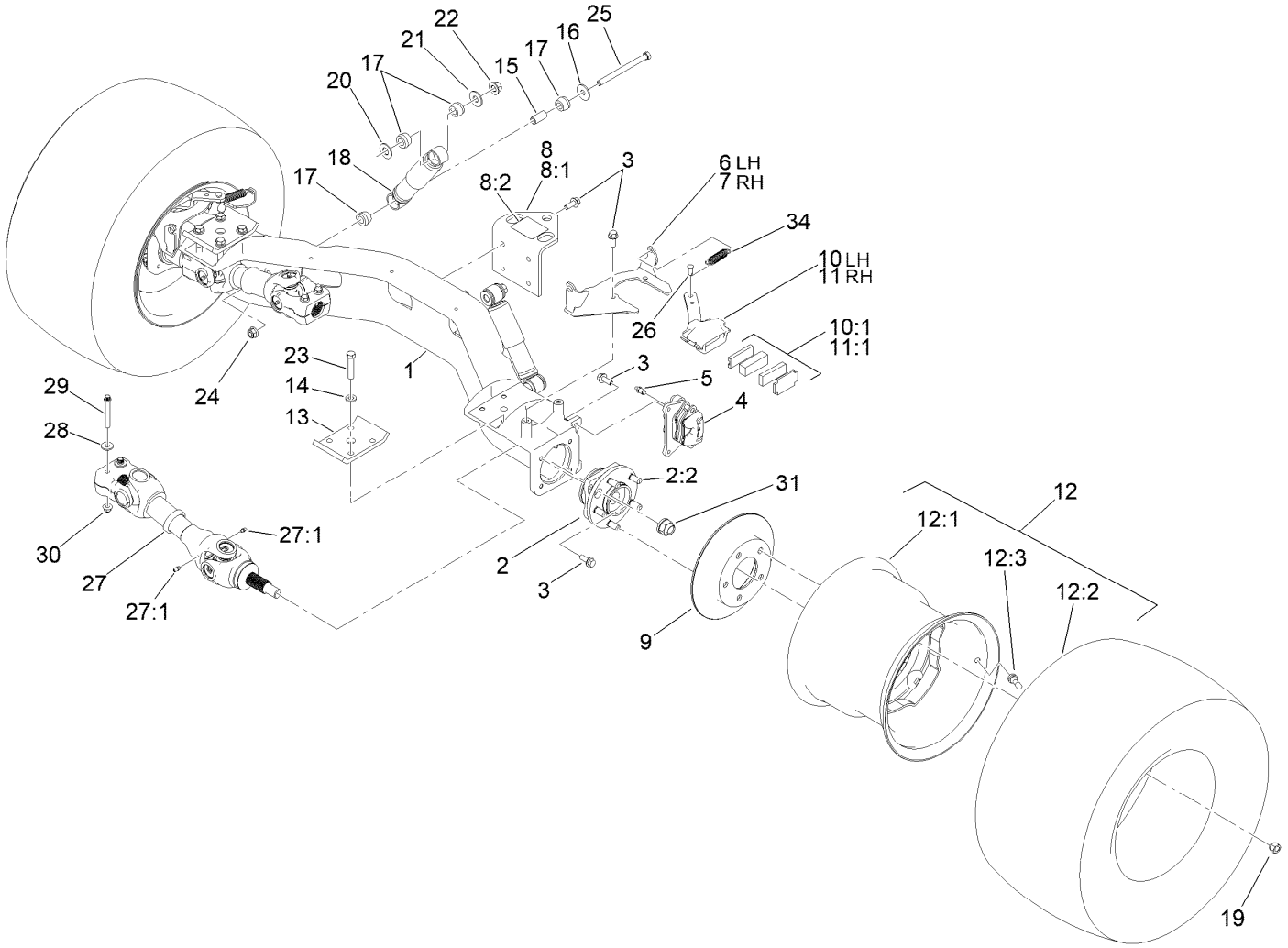

Rear Axle Assembly

Ref.	Part Number	Qty.	Description
1	144-2176	1	Axle-Rear
2	121-9751	2	Hub-Bearing, Wheel
2:2	121-9752	5	Stud-Wheel
3	3234-11	20	Screw-HHF
4	127-7424	2	Brake Caliper ASM
5	119-9509	2	Screw-Bleed
6	115-2362-0P	1	Bracket ASM-Caliper, LH
7	115-2359-0P	1	Bracket ASM-Caliper, RH
8	115-7742	1	Hitch ASM
8:1	92-5951-03	1	Angle-Hitch
8:2	136-1163	1	Decal-Load, Towing
9	114-8351	2	Rotor-Brake
10	114-8365	1	Caliper-Mechanical, LH
10:1	115-7847	1	Parking Brake Pad Kit
11	114-8366	1	Caliper-Mechanical, RH
11:1	115-7847	1	Parking Brake Pad Kit
12	147-2771	2	Wheel And Tire ASM
12:1	147-2772	1	Wheel
12:2	131-6673	1	Tire-Rear
12:3	232-27	1	Stem-Valve
13	87-7470-0P	2	Plate - Sprg Clamp *b

Ref.	Part Number	Qty.	Description
14	87-7480	8	Washer
15	87-3600	2	Spacer-Absorber, Shock
16	87-5330	2	Washer
17	87-3920	8	Bushing
18	121-9774	2	Absorber-Shock
19	242-50	10	Nut-Lug
20	3256-27	2	Washer-Flat
21	3256-6	2	Washer-Flat
22	99-5107	2	Nut-Lock
23	115-2398	8	Bolt-HH
24	114-8417	2	Nut-HF, NI
25	114-8424	2	Screw-HH
26	283-85	2	Pin-Clevis
27	138-5600	2	Driveshaft ASM
27:1	302-5	2	Fitting-Grease
28	80-6990	4	Washer-Hardened
29	98-2939	4	Screw-Cap
30	104-8301	4	Nut-HF, NI
31	115-2164	2	Nut-Spindle
34	104-6415	2	Spring-Return, Pedal

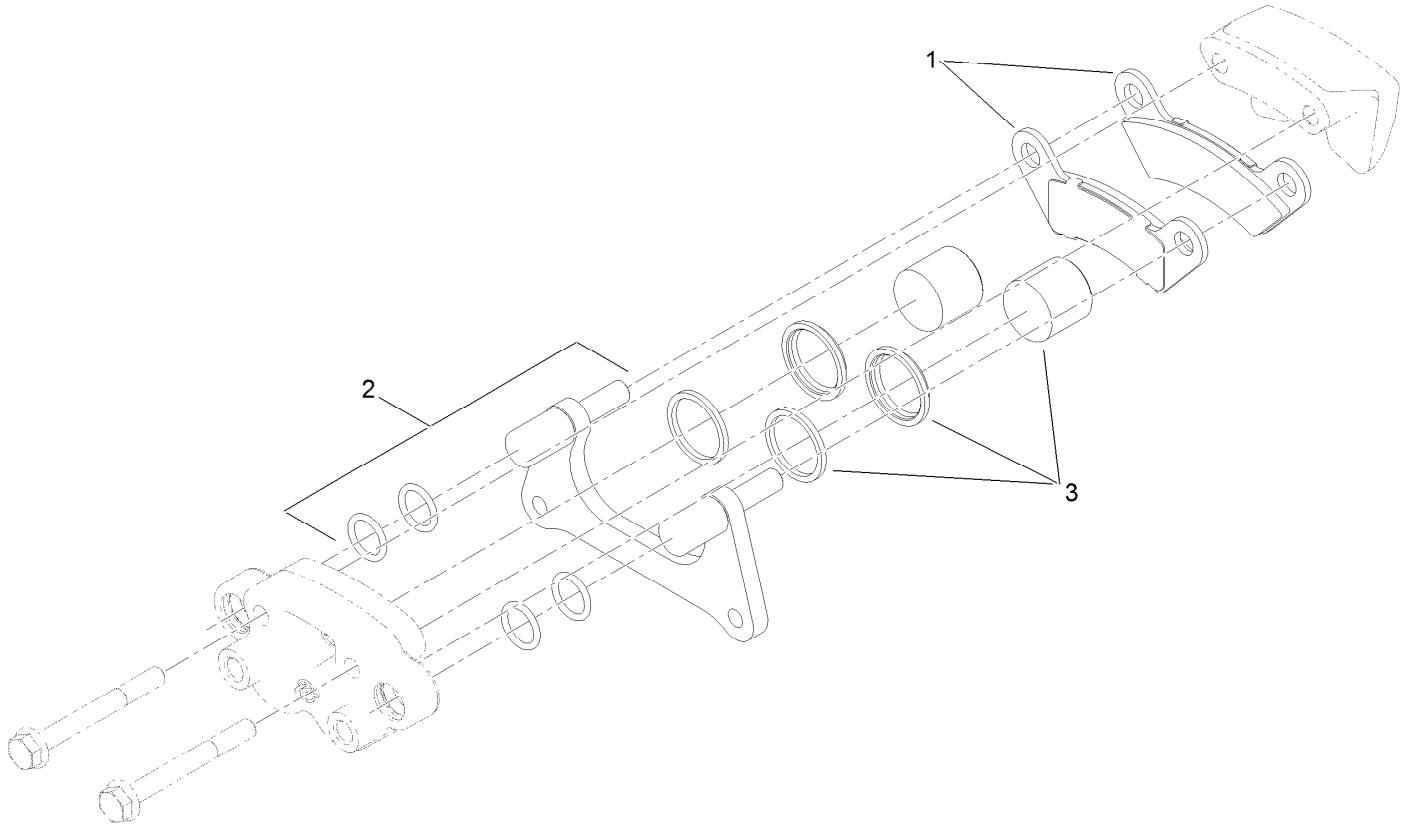

Brake Caliper Assembly No. 127-7424

Ref.	*Part Number*	*Qty.*	*Description*
1	133-0628	1	Brake Pad Kit
2	119-9511	1	Bracket Kit
3	133-0614	1	Piston Kit

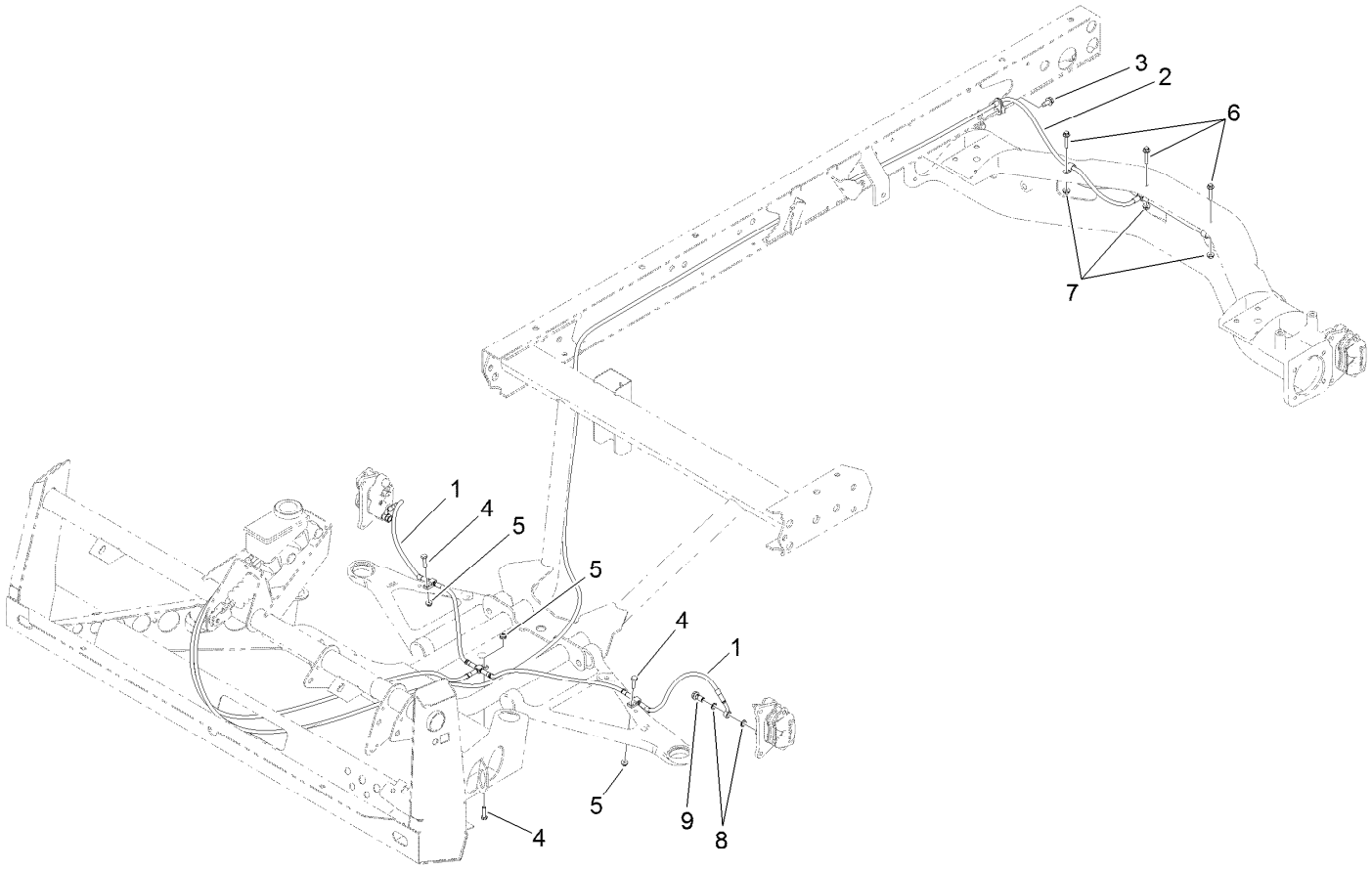

Front and Rear Brake Line Assembly

Ref.	*Part Number*	*Qty.*	*Description*
1	119-9682	1	Front Brake Line ASM
2	119-9681	1	Rear Brake Line ASM
3	32144-70	1	Screw-HWHTF
4	321-6	3	Screw-HH
5	104-7201	3	Nut-HF, NI
6	3234-21	3	Screw-HHF
7	32128-33	3	Nut-HF
8	115-2341	8	Washer-Banjo
9	120-4875	4	Bolt-Flange, Banjo

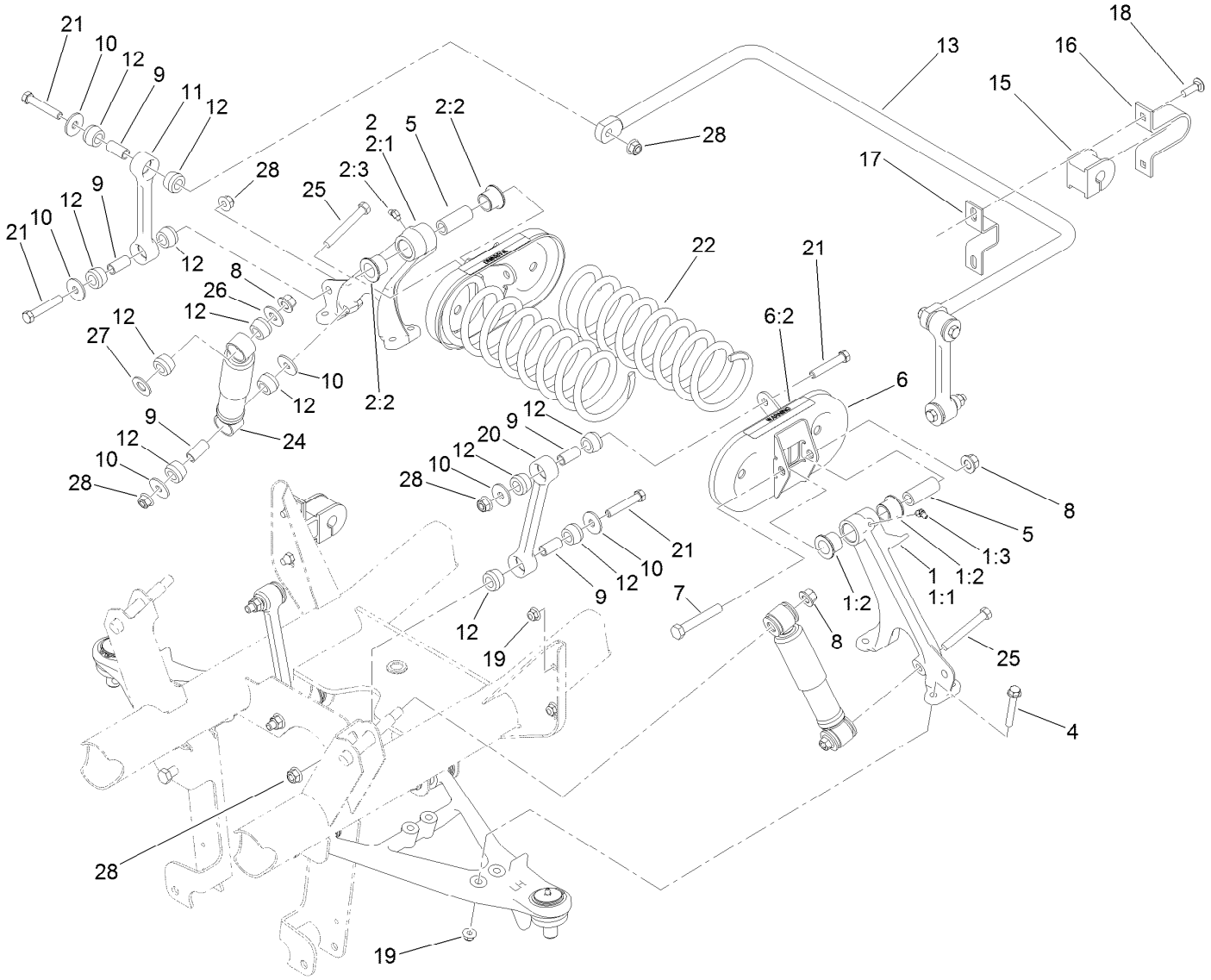

Front Suspension Assembly

Ref.	Part Number	Qty.	Description
1	137-1693	1	Control Arm-LH
1:1	87-0160-03	1	Tower-Control Arm, LH
1:2	33-3090	2	Bushing
1:3	302-11	1	Fitting-Lube, 45 DEG
2	137-1692	1	Control Arm-RH
2:1	87-0150-03	1	Tower-Control Arm, RH
2:2	33-3090	2	Bushing
2:3	302-11	1	Fitting-Lube, 45 DEG
4	3234-39	8	Screw-HHF
5	87-2500	2	Sleeve-Spring, Pivot
6	105-7958	2	Spring Cradle ASM
6:2	93-9879	1	Decal-Warning
7	325-13	2	Screw-HH
8	99-5107	4	Nut-Lock
9	87-3600	10	Spacer-Absorber, Shock
10	87-5330	12	Washer

Ref.	Part Number	Qty.	Description
11	119-6725	2	Link, Anti-Sway Bar
12	87-3920	24	Bushing
13	133-0633-0P	1	Bar-Anti-Sway, HD
15	87-3910	2	Bushing-Rubber
16	87-4010	2	Clamp, Anti-Sway Bar
17	87-3890	2	Bracket, Anti-Sway Bar
18	3231-25	4	Bolt-CARR
19	104-8301	12	Nut-HF, NI
20	119-6724	2	Link-Stabilizer
21	324-10	8	Screw-HH
22	140-2566	2	Spring-Compression
24	121-9774	2	Absorber-Shock
25	324-13	2	Screw-HH
26	3256-6	2	Washer-Flat
27	3256-27	2	Washer-Flat
28	114-8417	10	Nut-HF, NI

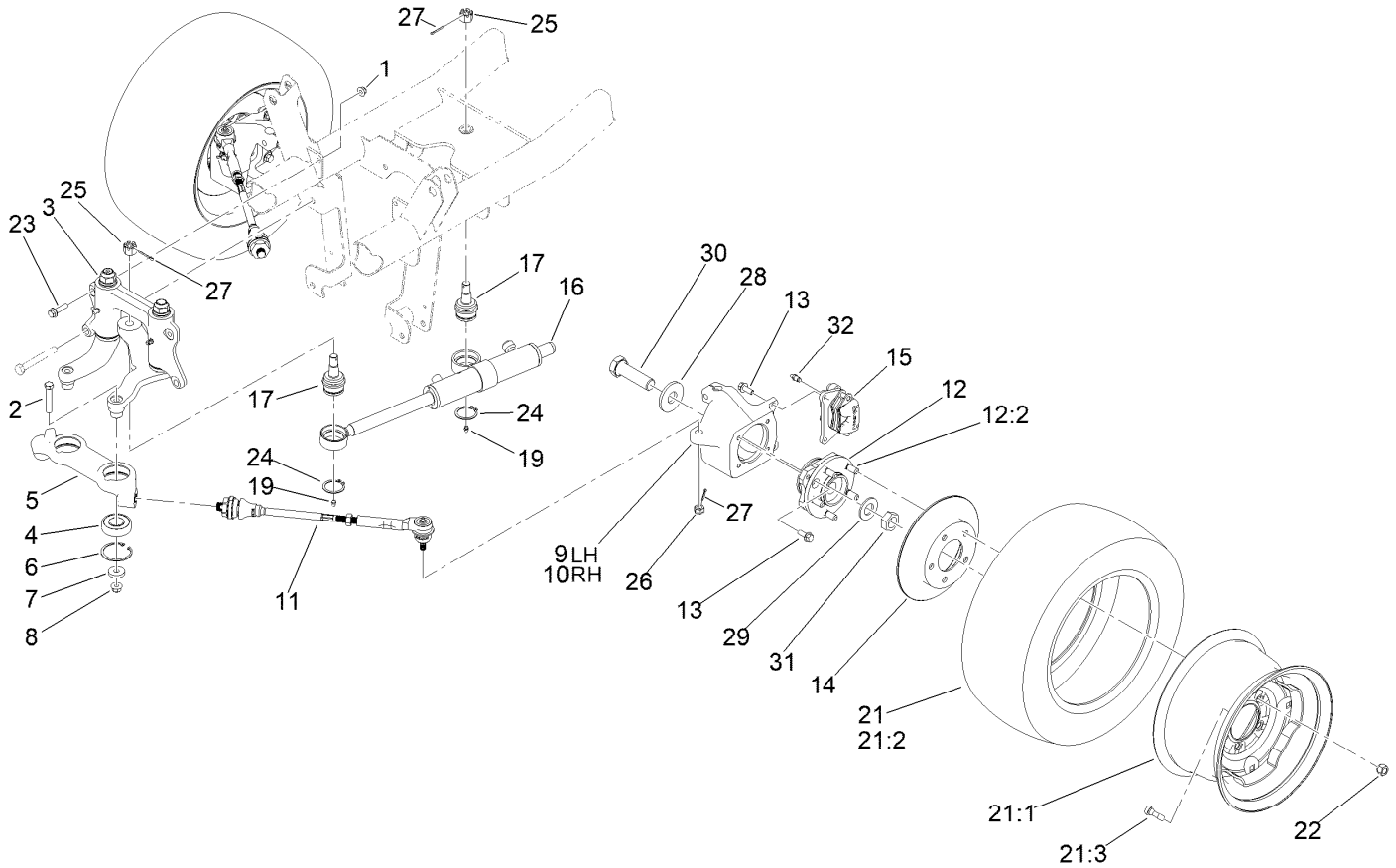

Steering and Front Wheel Assembly

Ref.	Part Number	Qty.	Description
1	104-8301	2	Nut-HF, NI
2	324-10	2	Screw-HH
3		1	Steering Linkage ASM ●
4	119-9548	2	Bearing-Ball
5	114-8296	1	Link-Center
6	32120-22	2	Ring-Snap, Internal
7	112843	2	Washer
8	114-8417	2	Nut-HF, NI
9	119-9513	1	Knuckle-LH
10	119-9514	1	Knuckle-RH
11	114-8356	2	Tie Rod ASM
12	121-9751	2	Hub-Bearing, Wheel
12:2	121-9752	5	Stud-Wheel
13	3234-11	12	Screw-HHF
14	114-8351	2	Rotor-Brake
15	127-7424	2	Brake Caliper ASM
16	112-3217	1	HYD Cylinder ASM

Ref.	Part Number	Qty.	Description
17	106-6774	2	Joint-Ball
19	302-5	2	Fitting-Grease
21	147-2769	2	Wheel And Tire ASM
21:1	147-2770	1	Wheel
21:2	131-6670	1	Tire
21:3	232-27	1	Stem-Valve
22	242-50	10	Nut-Lug
23	114-4681	2	Screw-HHF
24	32151-104	2	Ring-Retaining, External
25	32136-14	2	Nut-Hst
26	32136-3	2	Nut-SHH
27	3272-11	4	Pin-Cotter
28	104-0719	2	Washer-Hardened
29	3256-62	2	Washer-Flat
30	115-2173	2	Screw-HH
31	3296-49	2	Nut-Lock, NI
32	119-9509	2	Screw-Bleed

● Not serviced separately

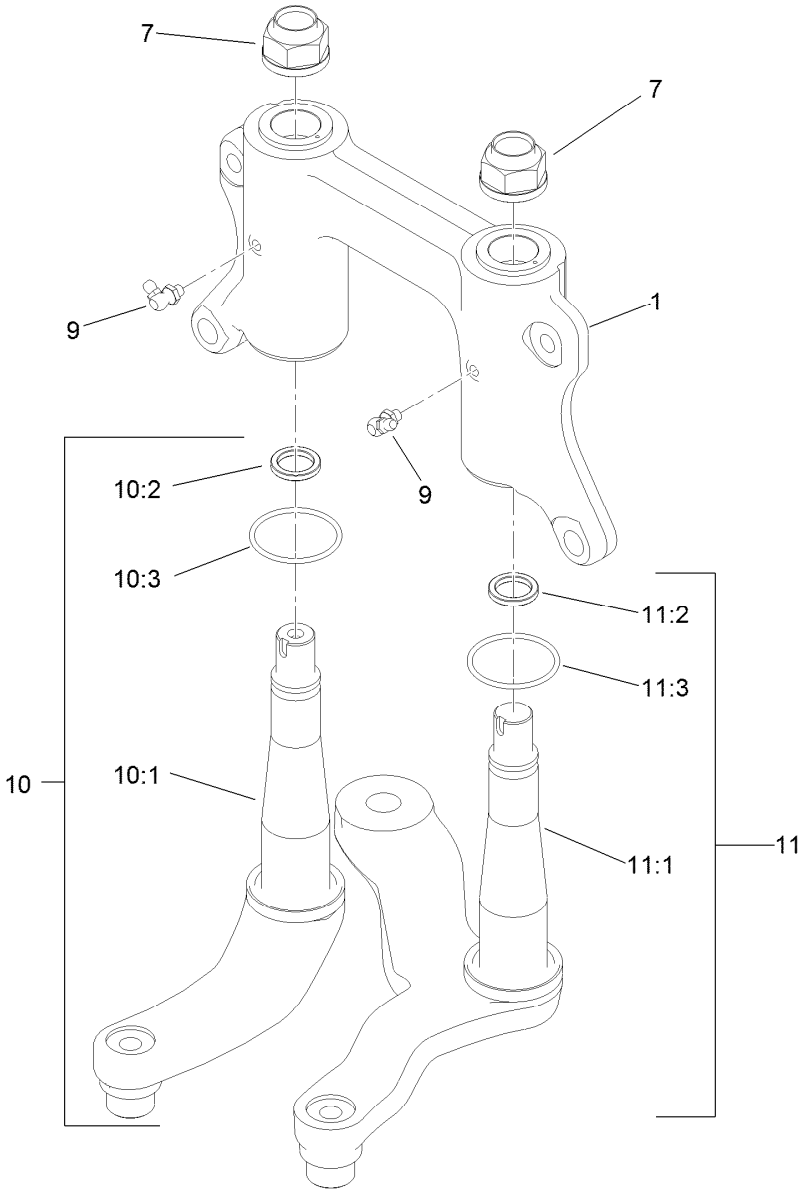

Steering Linkage Assembly

Ref.	*Part Number*	*Qty.*	*Description*
1	132-6767	1	Mount-Pivot, W/Bushings
7	115-2164	2	Nut-Spindle
9	302-60	2	Fitting-Grease
10	132-0794	1	Idler Arm ASM
10:1	132-0792	1	Idler Arm And Thrust Washer ASM
10:2	93-7510	1	Ring-Quad
10:3	131-3499	1	O-Ring
11	132-0795	1	Pitman Arm ASM
11:1	132-0793	1	Pitman Arm And Thrust Washer ASM
11:2	93-7510	1	Ring-Quad
11:3	131-3499	1	O-Ring

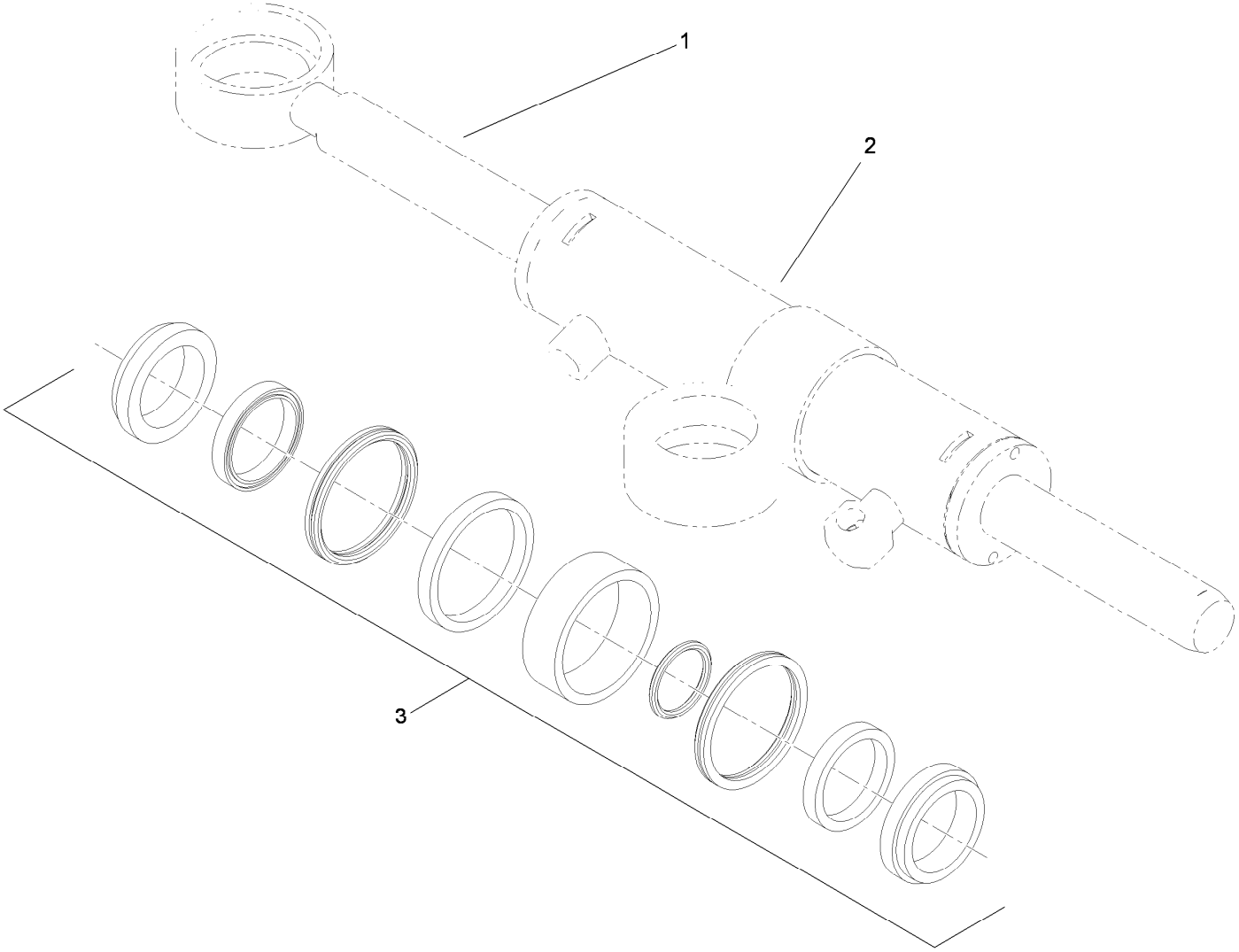

Hydraulic Cylinder Assembly No. 112-3217

Ref.	Part Number	Qty.	Description
1		1	Rod-Cylinder ●
2		1	Body-Cylinder ●
3	115-2160	1	Cylinder Repair Kit

● Not serviced separately

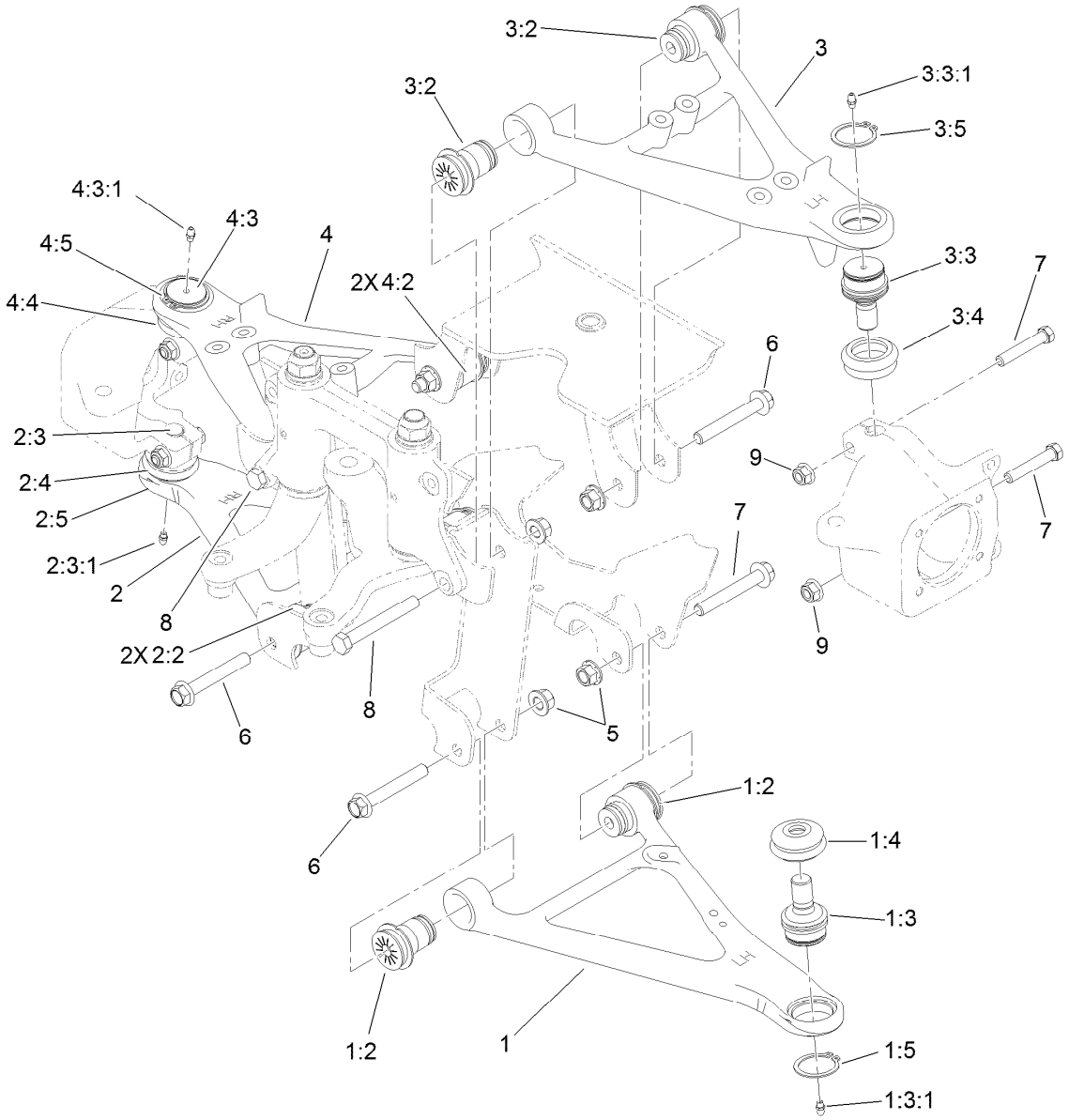

Front Control Arm Assembly

Ref.	Part Number	Qty.	Description
1	115-2405	1	Lower LH Control Arm ASM
1:2	87-1450	2	Bushing-Flange
1:3	115-2165	1	Ball Joint
1:3:1	302-5	1	Fitting-Grease
1:4	87-2420	1	Seal-Joint, Ball
1:5	32151-104	1	Ring-Retaining, External
2	115-2407	1	Lower RH Control Arm ASM
2:2	87-1450	2	Bushing-Flange
2:3	115-2165	1	Ball Joint
2:3:1	302-5	1	Fitting-Grease
2:4	87-2420	1	Seal-Joint, Ball
2:5	32151-104	1	Ring-Retaining, External
3	115-2404	1	Upper LH Control Arm ASM
3:2	87-1450	2	Bushing-Flange
3:3	115-2165	1	Ball Joint

Ref.	Part Number	Qty.	Description
3:3:1	302-5	1	Fitting-Grease
3:4	87-2420	1	Seal-Joint, Ball
3:5	32151-104	1	Ring-Retaining, External
4	115-2406	1	Upper RH Control Arm ASM
4:2	87-1450	2	Bushing-Flange
4:3	115-2165	1	Ball Joint
4:3:1	302-5	1	Fitting-Grease
4:4	87-2420	1	Seal-Joint, Ball
4:5	32151-104	1	Ring-Retaining, External
5	99-5107	8	Nut-Lock
6	114-8419	6	Screw-HHF
7	324-10	4	Screw-HH
8	325-17	2	Screw-HH
9	114-8417	4	Nut-HF, NI

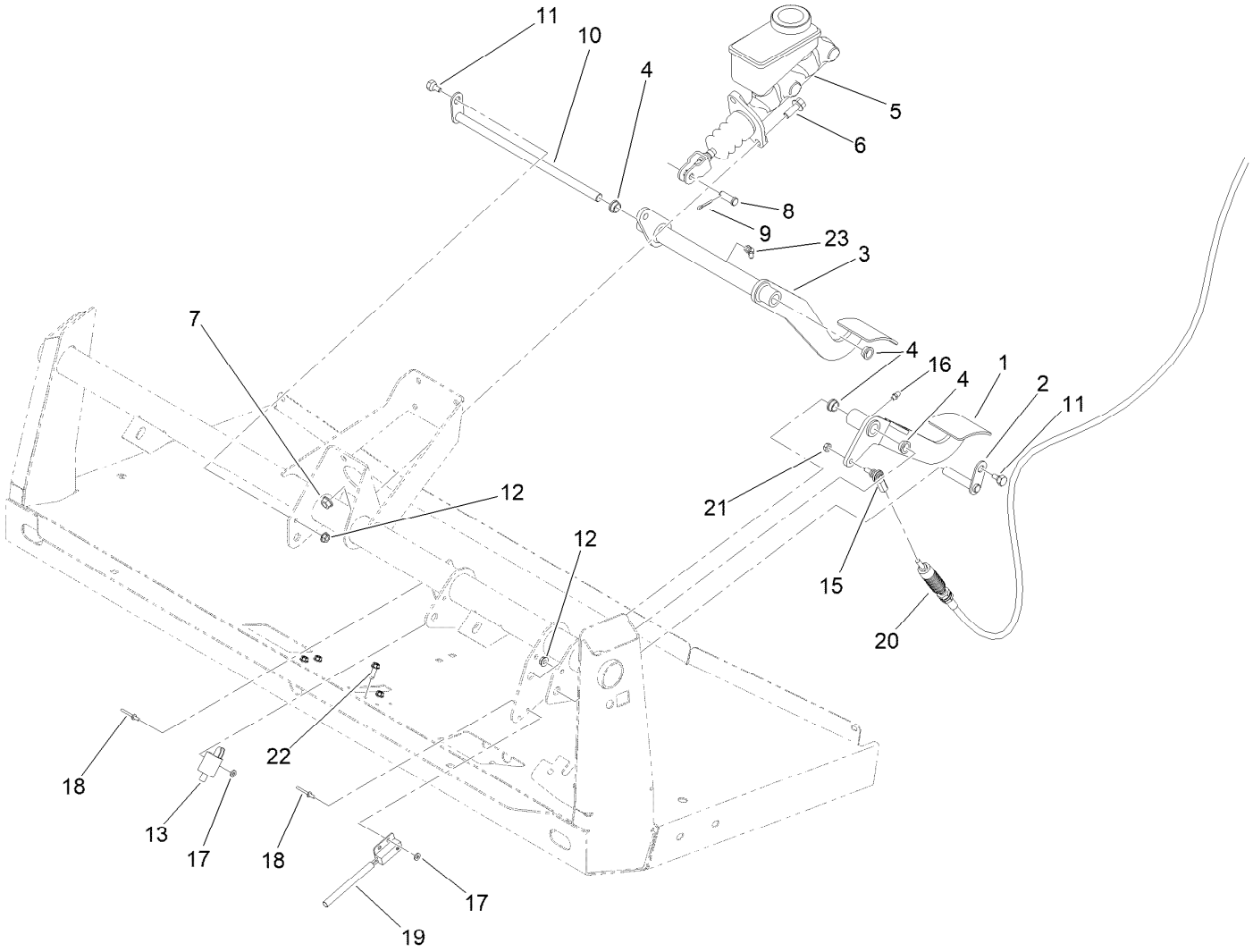

Brake and Clutch Pedal Assembly

Ref.	Part Number	Qty.	Description
1	127-7357-03	1	Pedal-Clutch
2	115-2269	1	Pin-Pivot
3	120-5023-03	1	Pedal-Brake
4	256-156	4	Bushing-Flange
5	104-6782	1	Master Cylinder ASM
6	3234-11	2	Screw-HHF
7	104-8301	2	Nut-HF, NI
8	283-2	1	Pin-Clevis
9	3272-10	1	Pin-Cotter
10	137-6729	1	Shaft-Brake
11	63-3410	2	Screw-Shoulder

Ref.	Part Number	Qty.	Description
12	32128-33	2	Nut-HF
13	95-1653	1	Switch-Pole, Single
15	110-2554	1	Rod End-Spherical
16	302-5	1	Fitting-Grease
17	3256-21	4	Washer-Flat
18	3269-25	4	Rivet-Pop
19	105-0023	1	Switch-Proximity
20	115-2284	1	Cable-Clutch
21	3296-13	1	Nut-Lock, NI
22	49-2040	4	Screw-HWHTF
23	302-60	1	Fitting-Grease

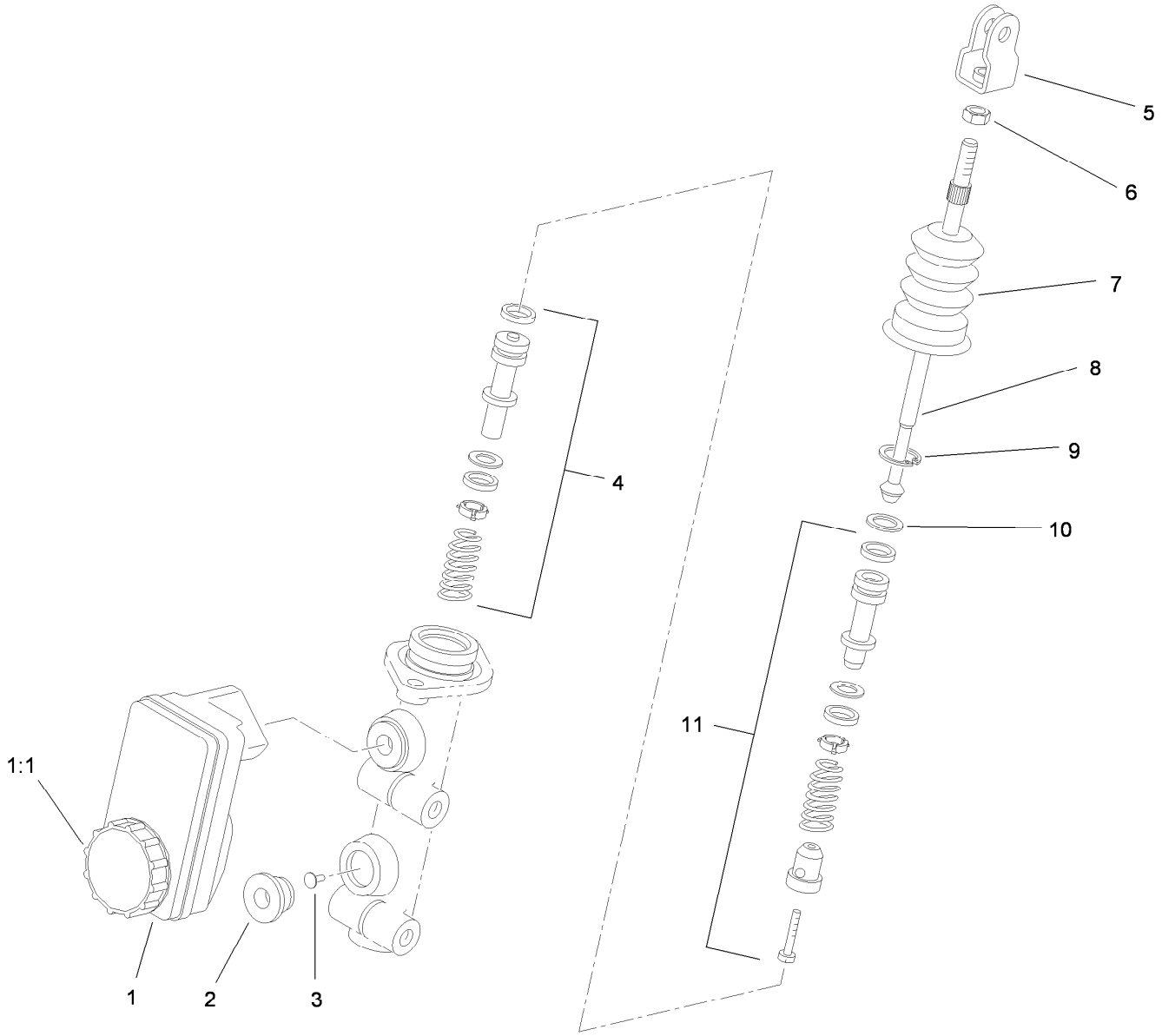

Master Cylinder Assembly No. 104-6782

Ref.	*Part Number*	*Qty.*	*Description*
1	104-6845	1	Reservoir ASM
1:1	92-4112	1	Cap ASM
2	93-8971	2	Seal-Port, Flange
3	92-4103	1	Pin-Stop
4	92-4102	1	Secondary Piston ASM
5	92-4110	1	Clevis
6	21-0360	1	Nut-Hex
7	94-5209	1	Cover-Dust
8	94-5210	1	Rod-Push
9	92-4109	1	Ring-Snap
10	92-4108	1	Retainer-Washer
11	92-4101	1	Primary Piston ASM

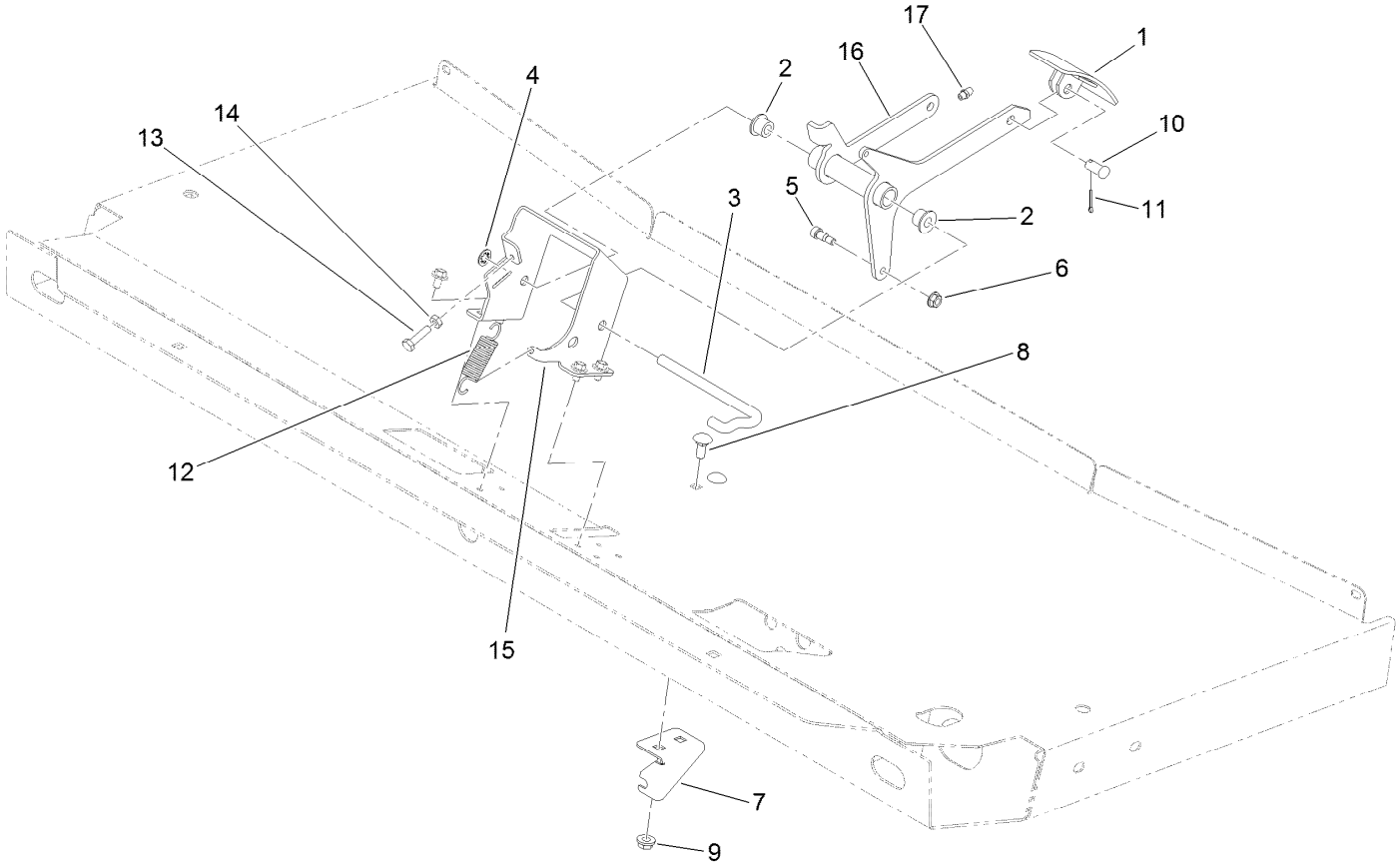

Accelerator Pedal Assembly

Ref.	Part Number	Qty.	Description
1	93-8969-03	1	Pedal
2	256-259	2	Bushing-Flange
3	87-2880	1	Shaft-Pedal, Accelerator
4	32151-56	1	Ring-Retaining, External
5	119-4881	1	Bolt-Shoulder
6	32128-33	1	Nut-HF
7	120-4982	1	Bracket-Mount, Cable
8	3230-1	2	Bolt-CARR
9	32128-20	2	Nut-HF
10	283-85	1	Pin-Clevis
11	3272-6	1	Pin-Cotter
12	67-1450	1	Spring-Idler
13	321-6	1	Screw-HH
14	3218-1	1	Nut-Jam
15	127-8625-03	1	Bracket-Mount, Pedal
16	120-4983-03	1	Pedal-Accelerator
17	302-5	1	Fitting-Grease

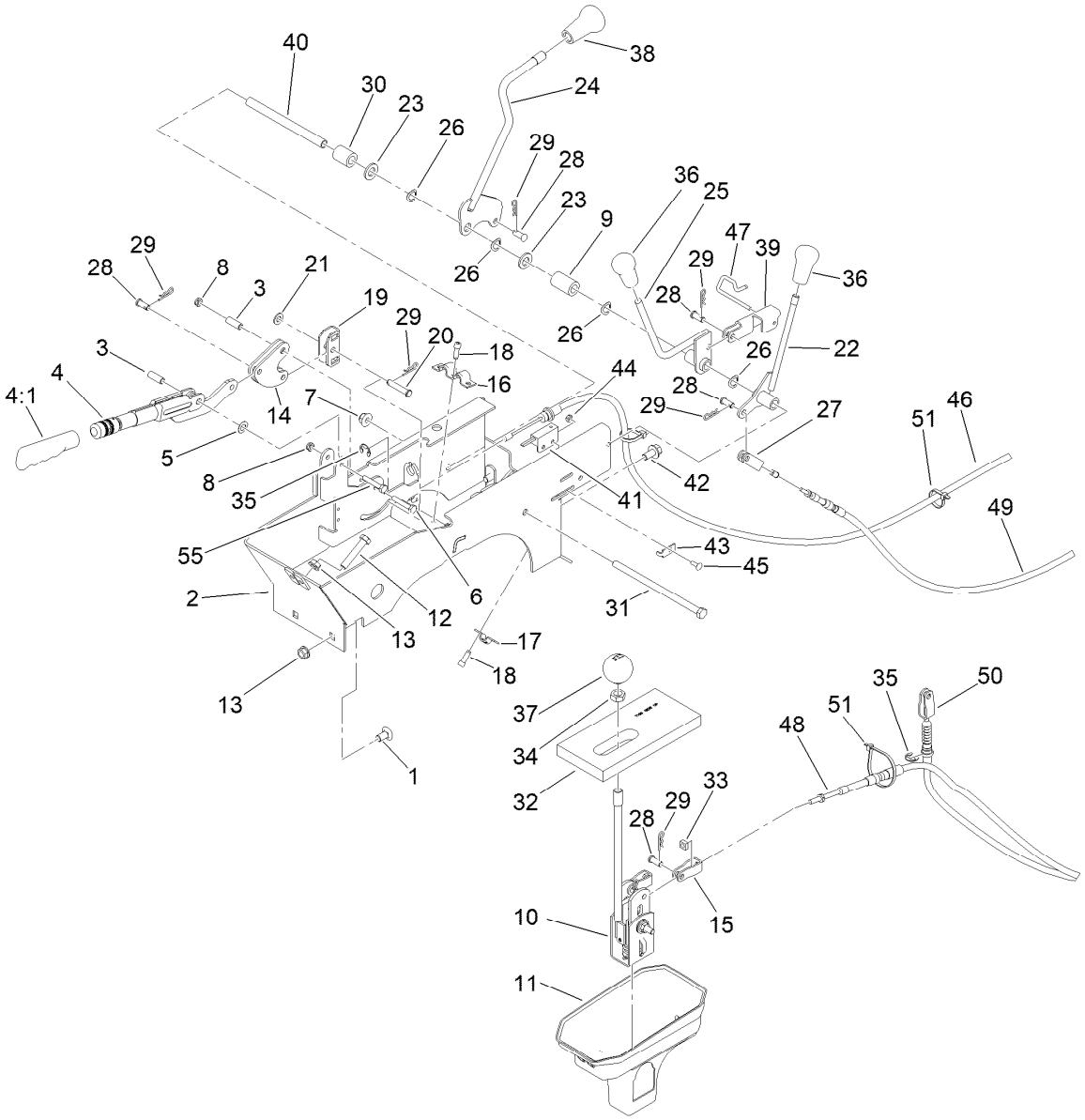

Console Assembly

Ref.	Part Number	Qty.	Description
1	3231-21	2	Screw-CARR
2	108-6914-03	1	Support-Lever
3	114402	2	Spacer
4	127-8863	1	Lever-Brake, Park
4:1	127-8864	1	Grip-Handle
5	3290-477	1	Washer-Curved
6	321-37	1	Screw-HH
7	104-8301	1	Nut-HF, NI
8	3296-56	2	Nut-Lock, NI
9	120-5037	1	Spacer
10	106-7887	1	Shift ASM
11	106-2376	1	Boot-Shift, Lower
12	323-10	2	Screw-HH
13	3290-357	4	Nut-HSF
14	106-7814	2	Bellcrank
15	87-2310	2	Clevis-Cable
16	87-4960	1	Clamp-Cable
17	87-4340	1	Clamp-Cable
18	65-5221	5	Screw-Hshtf
19	87-3480	1	Bracket-Equalizer, Cable
20	94-3829	1	Pin-Clevis

Ref.	Part Number	Qty.	Description
21	3256-23	1	Washer-Plain
22	106-7828	1	Lever
23	33096-00	2	Washer-Flat
24	131-3479	1	Lever-Lock, Differential
25	106-7960	1	Lever-HYD
26	3290-221	4	Washer-Spring
27	87-7160	1	Clevis-Cable
28	283-62	6	Pin-Clevis
29	3290-307	7	Pin-Cotter
30	66-6501	1	Spacer-Wheel
31	323-36	1	Screw-HH
32	87-6570	1	Seal-Boot, Lower
33	140-4804	2	Nut-Square
34	3218-18	1	Nut-Jam
35	32120-47	3	Ring-Retaining, External
36	106-7903	2	Knob-Control
37	87-6720	1	Knob-Shift
38	106-7952	1	Knob
39	115-2250	1	Link
40	106-7833	1	Spacer
41	100-1270	1	Switch-Proximity

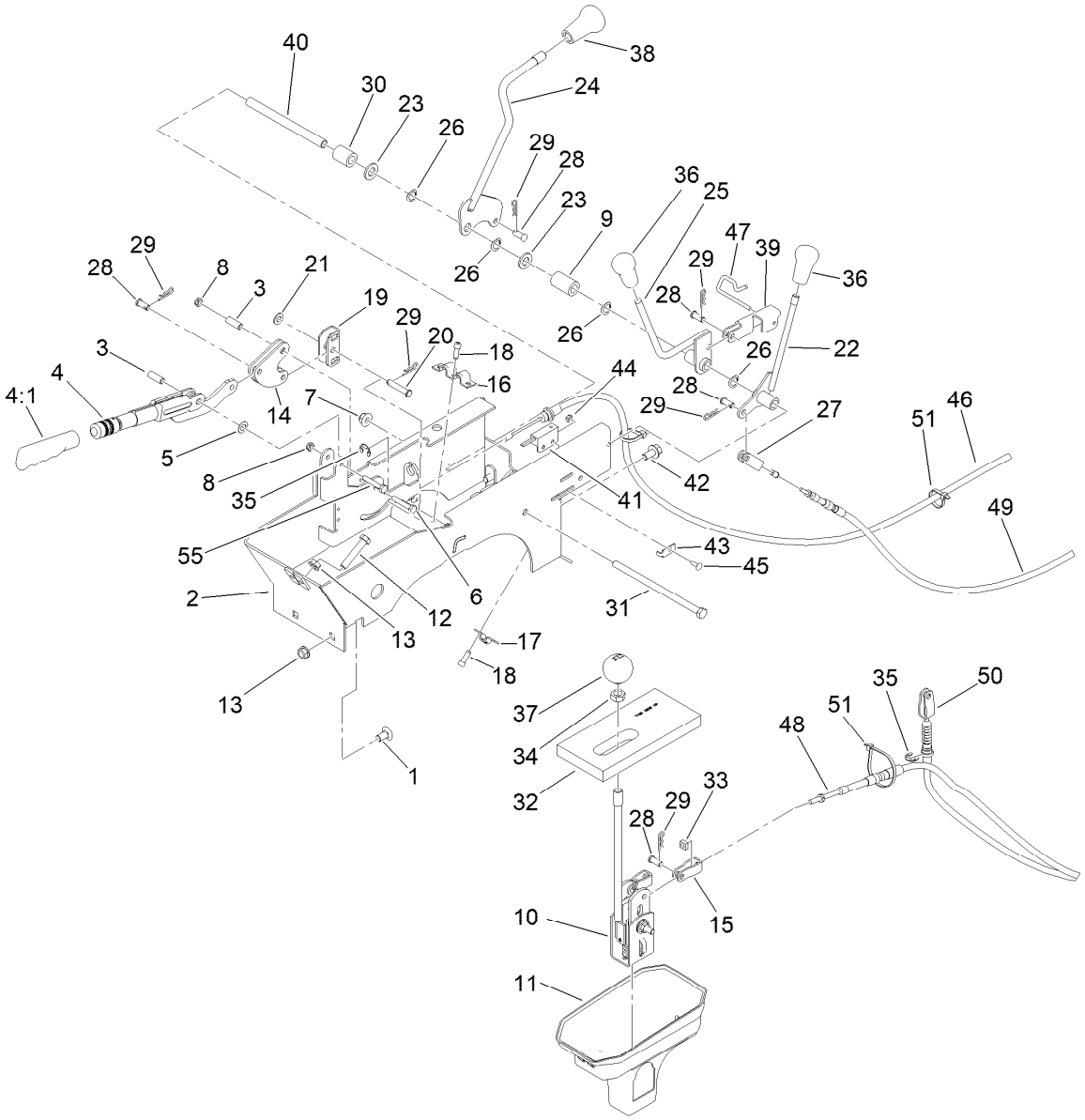

Console Assembly (continued)

Ref.	Part Number	Qty.	Description
42	3234-12	2	Screw-HHF
43	100-4872	1	Plate-Switch, Neutral
44	3296-2	1	Nut-Lock, NI
45	3229-34	1	Screw-CARR
46	115-2283	2	Cable-Brake, Park
47	115-2350	1	Pin-Retainer

Ref.	Part Number	Qty.	Description
48	115-7811	2	Cable-Selector, Gear
49	115-7812	1	Cable-Hi Low
50	115-2287	1	Cable-Lock, Differential
51	3290-379	5	Tie-Cable
55	321-9	1	Screw-HH

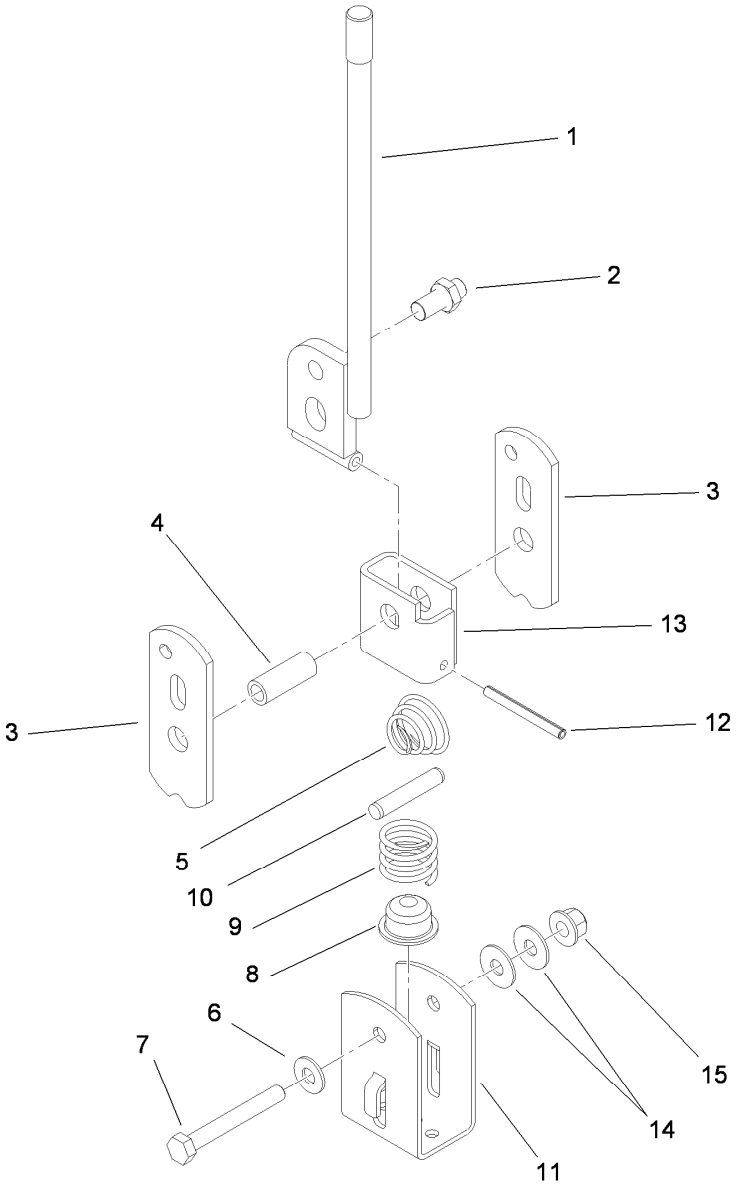

Shift Assembly No. 106-7887

Ref.	Part Number	Qty.	Description
1	131-3469	1	Lever-Shift
2	87-3650	1	Pin-Shift
3	87-3540	2	Link-Shift
4	87-2520	1	Tube-Pivot
5	87-2900	1	Spring-Compression
6	87-8640	1	Washer-Flat
7	322-12	1	Screw-HH
8	87-3530	1	Button-Shifter
9	87-3660	1	Spring-Compression
10	3290-507	1	Pin-Dowel
11	87-3520	1	Clevis
12	32121-48	1	Pin-Spring
13	87-6040	1	Bracket-Shifter
14	3290-456	2	Washer-Belleville
15	104-8300	1	Nut-HF, NI

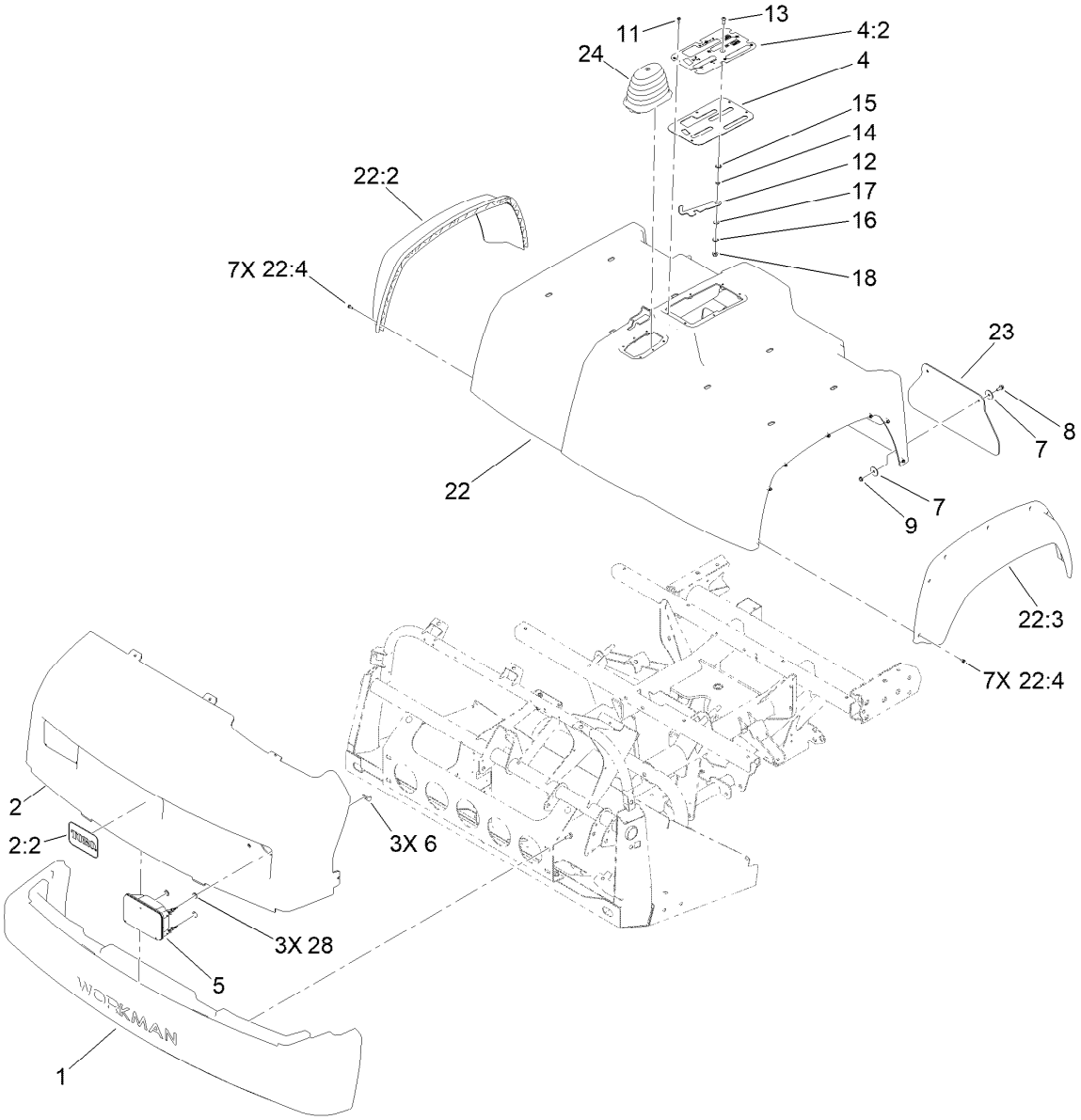

Bumper, Hood and Seat Base Assembly

Ref.	Part Number	Qty.	Description
1	112-3185	1	Bumper
2	145-2284	1	Hood ASM
2:2	117-4950	1	Decal
4	106-7886	1	Control Plate ASM
4:2	106-2377	1	Decal-Console
5	138-9260	2	Headlight ASM
6	114-8341	6	Clip-Speed
7	3256-55	8	Washer-Flat
8	3234-4	4	Screw-HHF
9	104-7201	4	Nut-HF, NI
11	98-1375	6	Screw-HWH
12	106-7984	1	Lever-Detent
13	3274-55	1	Screw-HSBH

Ref.	Part Number	Qty.	Description
14	82-4240	1	Spacer-Bearing
15	94-8196	1	Washer-Nylon
16	3290-221	1	Washer-Spring
17	3256-23	1	Washer-Plain
18	104-8300	1	Nut-HF, NI
22	133-0566	1	Seatbase ASM
22:2	114-8407	1	Fender-Front, RH
22:3	114-8408	1	Fender-Front, LH
22:4	117-5036	14	Screw-Plastic, HWH
23	106-2378	2	Mudflap
24	117-8063	1	Boot-Shift
28	112-6957	6	Washer-Hardened

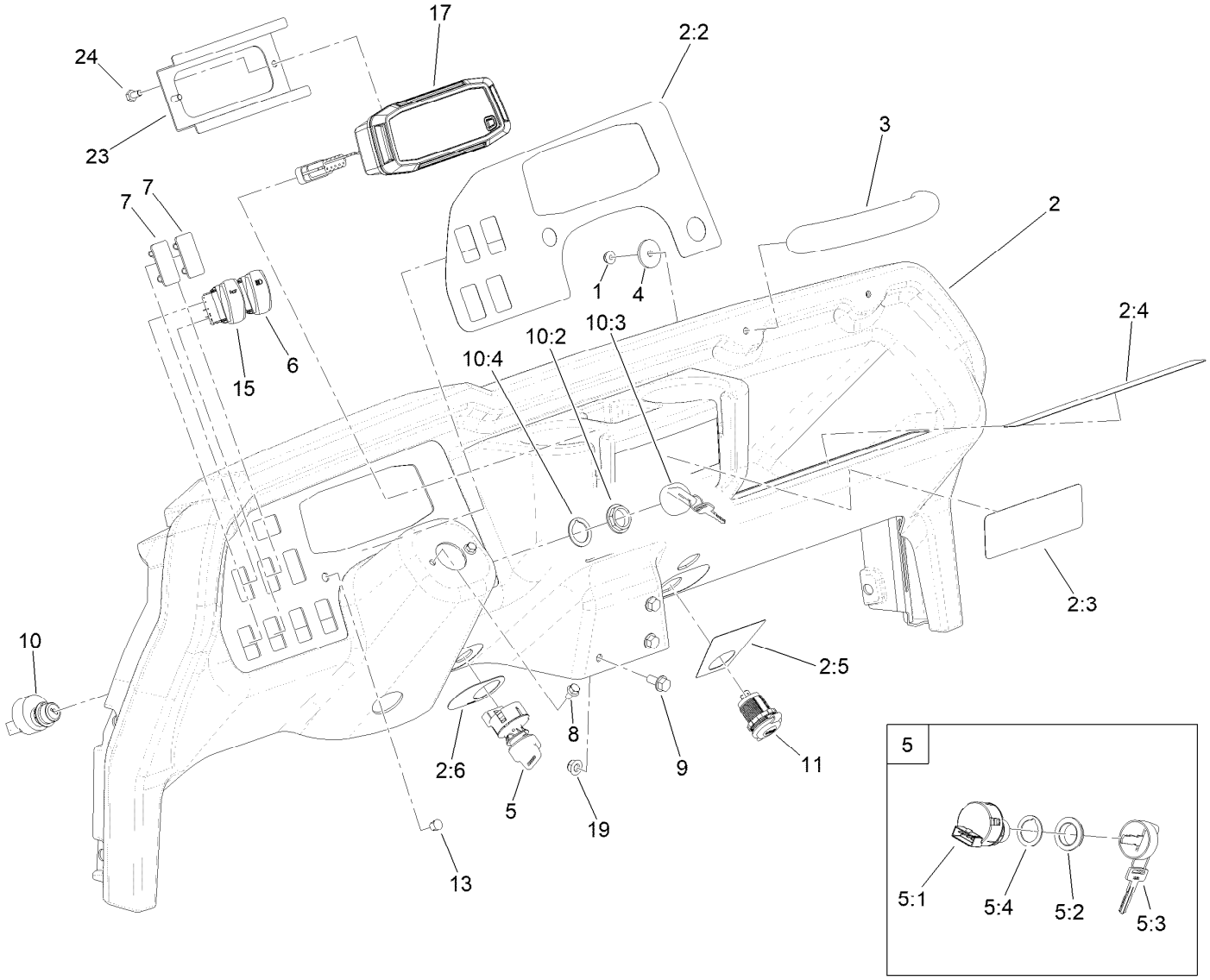

Dash Assembly

Ref.	Part Number	Qty.	Description
1	104-7201	2	Nut-HF, NI
2	145-2283	1	Dash ASM
2:2	145-2276	1	Decal-Control Panel, HD
2:3	121-9776	1	Decal-Danger, Vehicle (CE)
2:4	115-2282	1	Decal-Warning, Dash
2:5	145-2282	1	Decal-USB
2:6	106-2355	1	Decal-Switch, Supervisor
3	117-4948	1	Handle-Grab
4	103995	2	Washer
5	110-2580	1	Switch-Key, Supervisor
5:1		1	Switch-Key ●
5:2	108-8660	1	Nut-Mounting
5:3	110-5221	1	Set-Key, Supervisor
5:4	108-8659	1	Washer-Backup
6	144-2405	1	Switch-Rocker, On-None-On

Ref.	Part Number	Qty.	Description
7	99-7420	2	Plug-Hole
8	33103-012	2	Screw-HHF
9	3234-5	3	Screw-HHF
10	106-5269	1	Ignition Switch ASM
10:2	108-8660	1	Nut-Mounting
10:3	106-5270	1	Ignition Key Set
10:4	108-8659	1	Washer-Backup
11	131-8388	1	Socket-USB
13	104-9368	1	Plug-Dome
15	144-2415	1	Switch-Rocker, (On)-None-Off
17	145-2080	1	Cluster-Instrument
19	104-8300	3	Nut-HF, NI
23	140-4556-0P	1	Retainer-Display
24	321-2	2	Screw-HH

● Not serviced separately

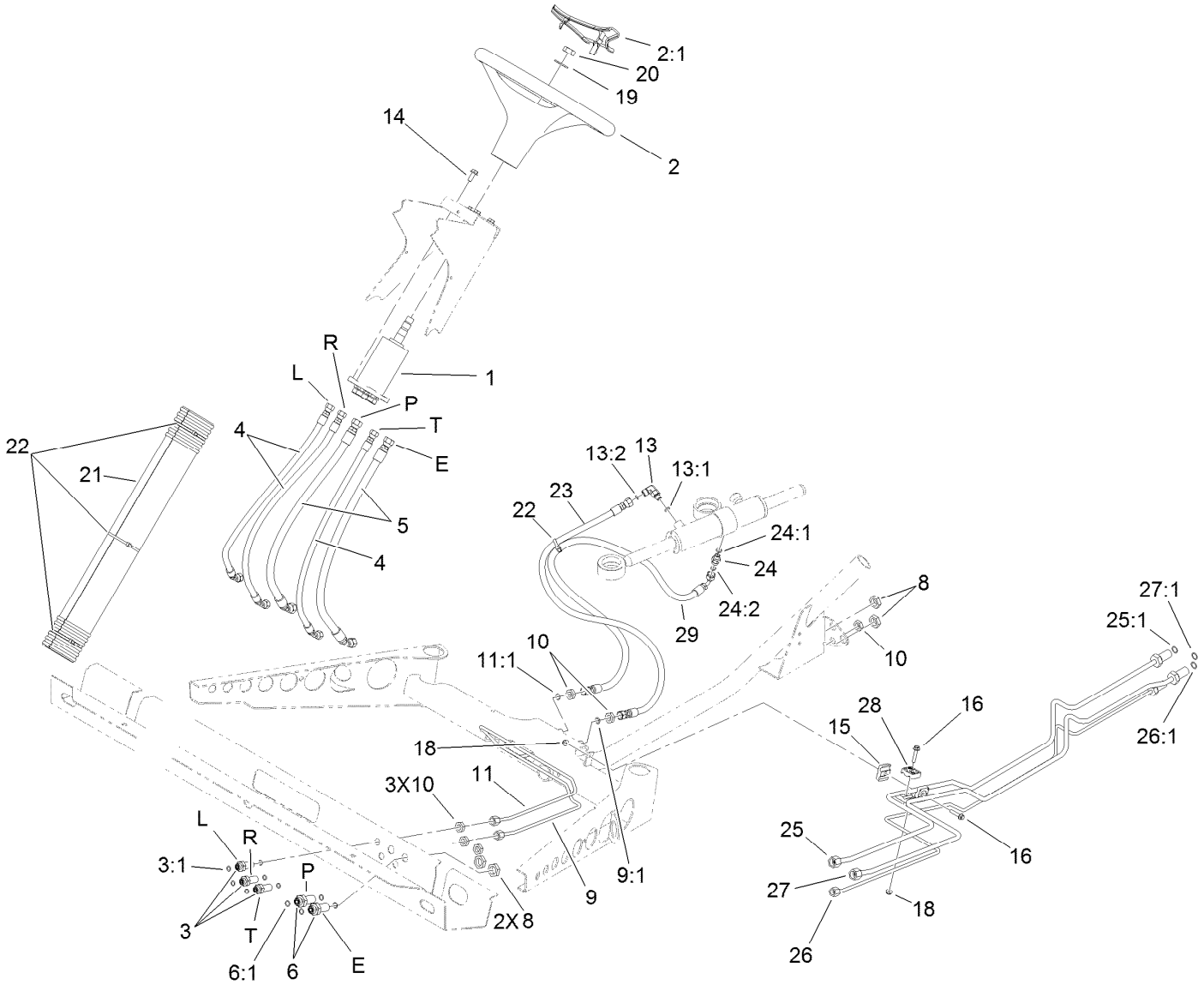

Steering Hydraulic Assembly

Ref.	Part Number	Qty.	Description
1	120-4813	1	Pump-Steering
2	98-1471	1	Wheel-Steering
2:1	98-1468	1	Cover-Wheel, Steering
3	94-1444	3	Union-Bulkhead
3:1	237-21	2	O-Ring
4	106-7974	3	Hose-HYD
5	106-7975	2	Hose-HYD
6	340-71	2	Fitting-Straight, Bulkhead
6:1	237-22	2	O-Ring
8	340-70	4	Nut-Lock
9	106-7804	1	Tube-HYD
9:1	237-21	1	O-Ring
10	3219-10	6	Nut-Hex
11	106-7806	1	Tube-HYD
11:1	237-21	1	O-Ring
13	340-132	1	Fitting-Elbow, 90 DEG
13:1	237-78	1	O-Ring
13:2	237-21	1	O-Ring
14	98-7977	4	Screw-HHF

Ref.	Part Number	Qty.	Description
15	106-7839	2	Clamp-Tube
16	3234-21	2	Screw-HHF
18	104-7201	2	Nut-HF, NI
19	3256-27	1	Washer-Flat
20	3296-33	1	Nut-Lock, NI
21	106-6713	1	Cover-Lines, Steering
22	3290-379	4	Tie-Cable
23	108-6505	1	Hose-HYD
24	340-92	1	Fitting-Straight
24:1	237-78	1	O-Ring
24:2	237-21	1	O-Ring
25	115-7701	1	Tube-HYD
25:1	237-22	1	O-Ring
26	115-7702	1	Tube-HYD
26:1	237-22	1	O-Ring
27	115-7703	1	Tube-HYD
27:1	237-21	1	O-Ring
28	56-7973	2	Clamp-Tube
29	117-4861	1	Hose-HYD

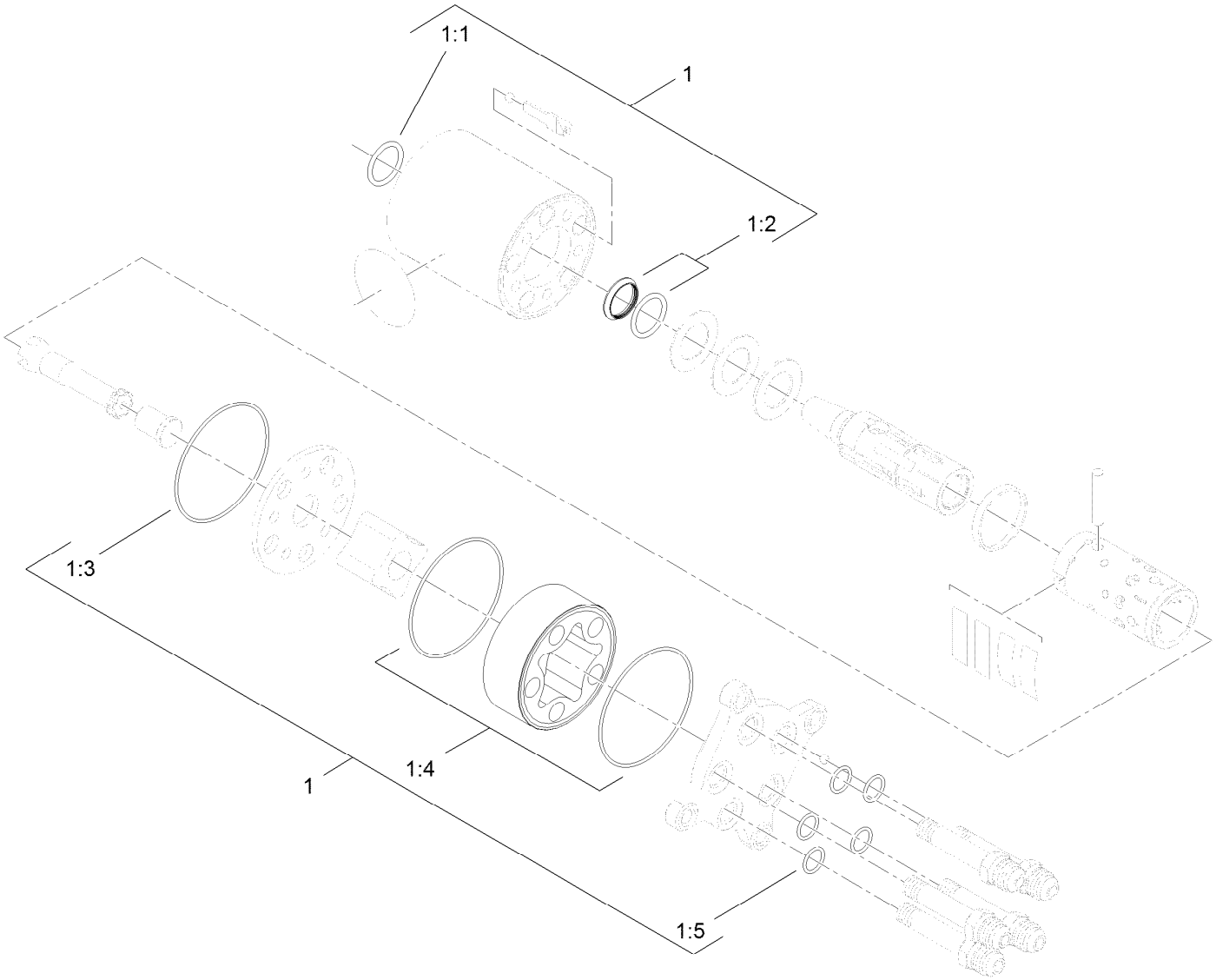

Steering Valve Assembly No. 120-4813

Ref.	*Part Number*	*Qty.*	*Description*
1	106-6716	1	Seal Kit
1:1		1	Ring-Seal, Dust ●
1:2		1	Seal-Shaft ●
1:3		1	O-Ring ●
1:4		2	O-Ring ●
1:5		5	O-Ring ●

● Not serviced separately

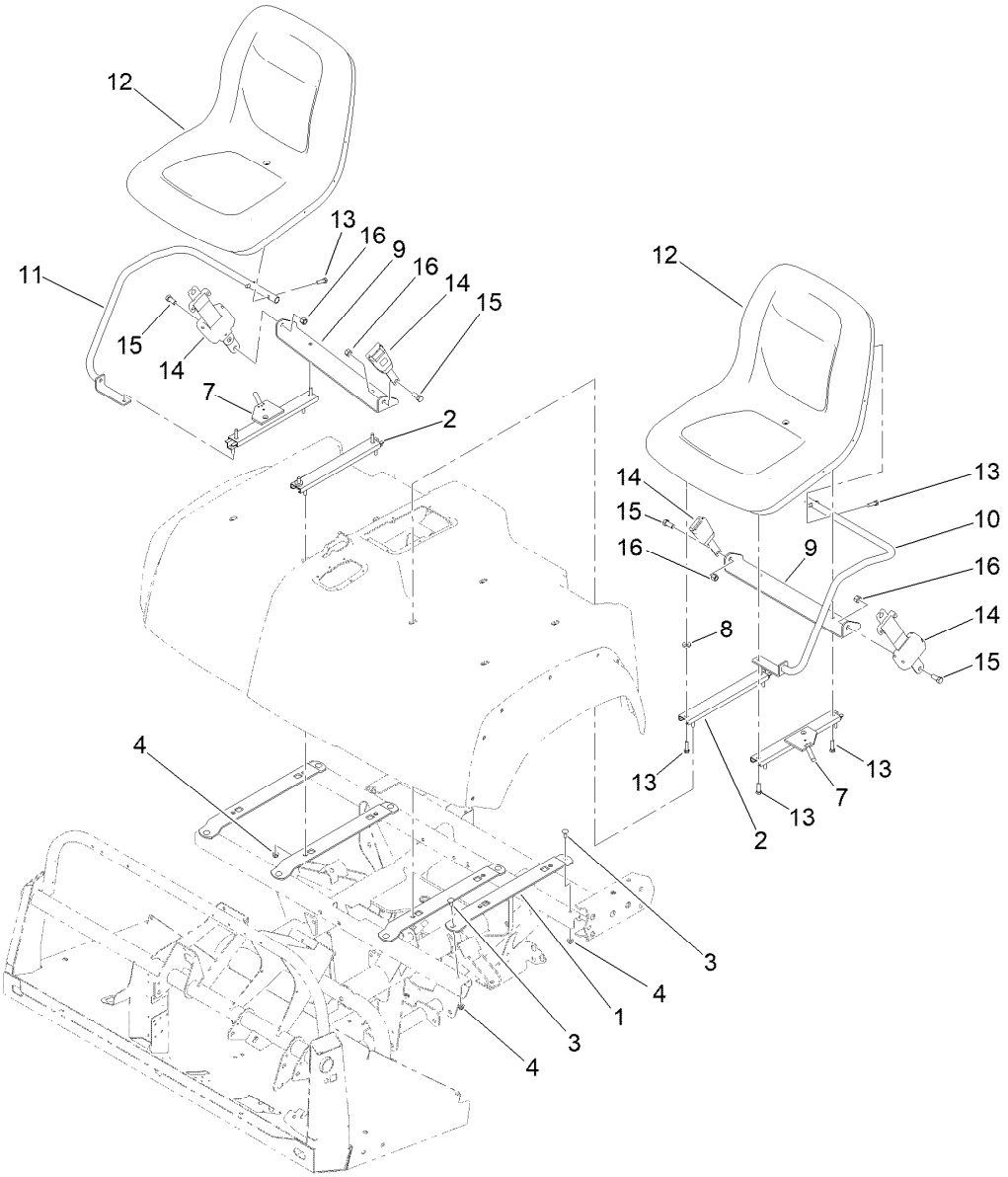

Seat Assembly

Ref.	Part Number	Qty.	Description
1	115-2435-0P	4	Bracket-Seat
2	92-8990	2	Adjuster-Seat, Non-Locking
3	3230-1	8	Bolt-CARR
4	104-8300	16	Nut-HF, NI
7	92-8991	2	Adjuster (W/Latch)
8	104-7658	2	Spacer
9	119-0727-03	2	Bracket-Belt, Seat
10	140-6359	1	Armrest LH
11	140-6360	1	Armrest-RH
12	133-0577	2	Seat ASM
13	33114-030	12	Screw-HH
14	110-0413	2	Seatbelt-Retractable
15	3212-4	4	Screw-HH
16	3296-7	4	Nut-Lock

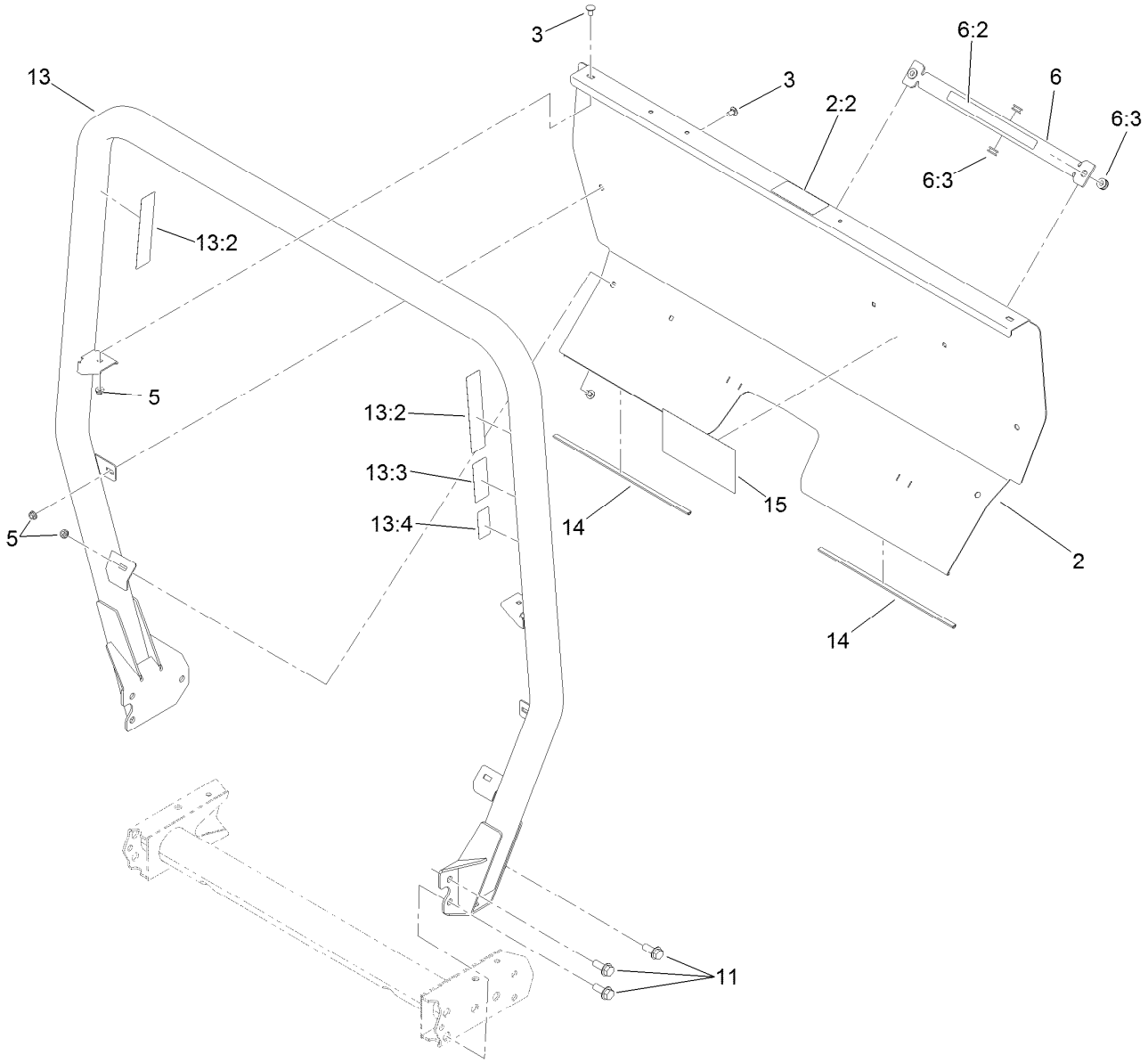

Roll-Over Protection System Assembly

Ref.	Part Number	Qty.	Description
2	115-2213	1	ROPS Cover ASM
2:2	105-4215	1	Decal-Caution
3	3230-18	6	Screw-CARR
5	32128-20	6	Nut-HF
6	105-7960	1	Bed Support ASM
6:2	93-9852	1	Decal-Warning
6:3	92-5972	4	Grommet-Rubber
11	3234-38	6	Screw-HHF
13	115-7910	1	ROPS ASM
13:2	106-7767	2	Decal-ROPS
13:3	93-9850	1	Decal-ROPS, CE
13:4	117-4969	1	Decal-ROPS, ISO
14	127-7382	2	Seal-ROPS
15	115-7814	1	Decal-Reference, Quick

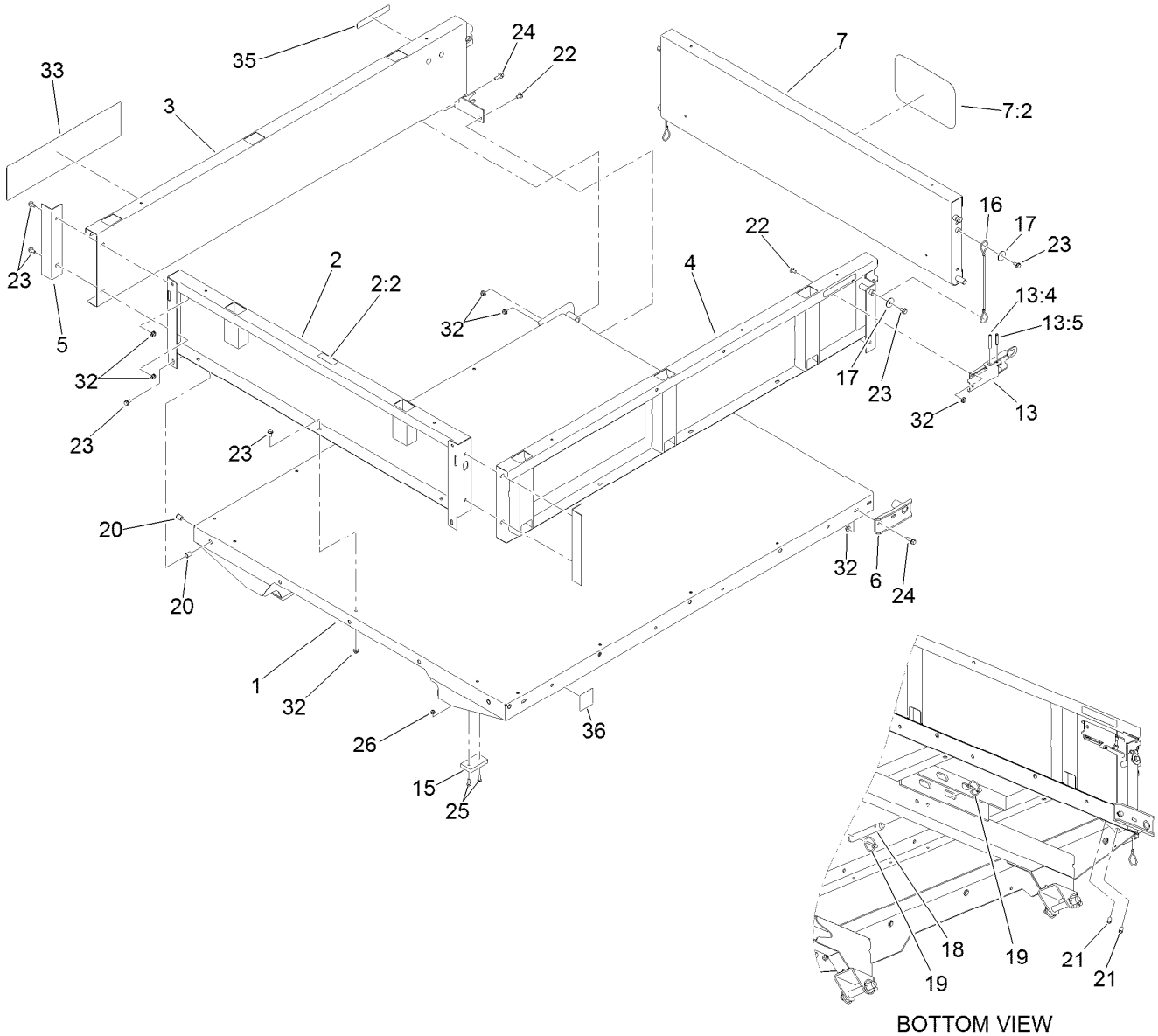

Full Bed and Side Panel Assembly

Ref.	Part Number	Qty.	Description
1	138-5675	1	Flatbed ASM
2	133-0645	1	Front Panel ASM
2:2	115-7739	1	Decal-No Riders
3	133-0617	1	Panel-Side, RH
4	133-0616	1	Panel-Side, LH
5	92-1320-03	2	Angle-Side
6	92-1265-03	2	Bracket-Pivot
7	133-0644	1	Tailgate
7:2	105-4222	1	Decal
13	140-4795	2	Latch ASM
13:4	32121-78	1	Pin-Roll
13:5	32121-25	1	Pin-Roll
15	93-9719	2	Block-Wear
16	93-9595	2	Lanyard

Ref.	Part Number	Qty.	Description
17	3256-57	4	Washer-Flat
18	92-1233	4	Pin-Clevis
19	92-1298	8	Pin-Lynch
20	32148-7	4	Nut-Clinch
21	32148-6	4	Nut-Clinch
22	3230-18	6	Screw-CARR
23	3234-7	21	Screw-HHF
24	3234-29	6	Screw-HHF
25	3250-45	4	Screw-SPH
26	3296-42	4	Nut-Lock, NI
32	32128-20	27	Nut-HF
33	115-7915	2	Decal
35	93-9868	2	Decal-Caution
36	93-9899	2	Decal-Warning

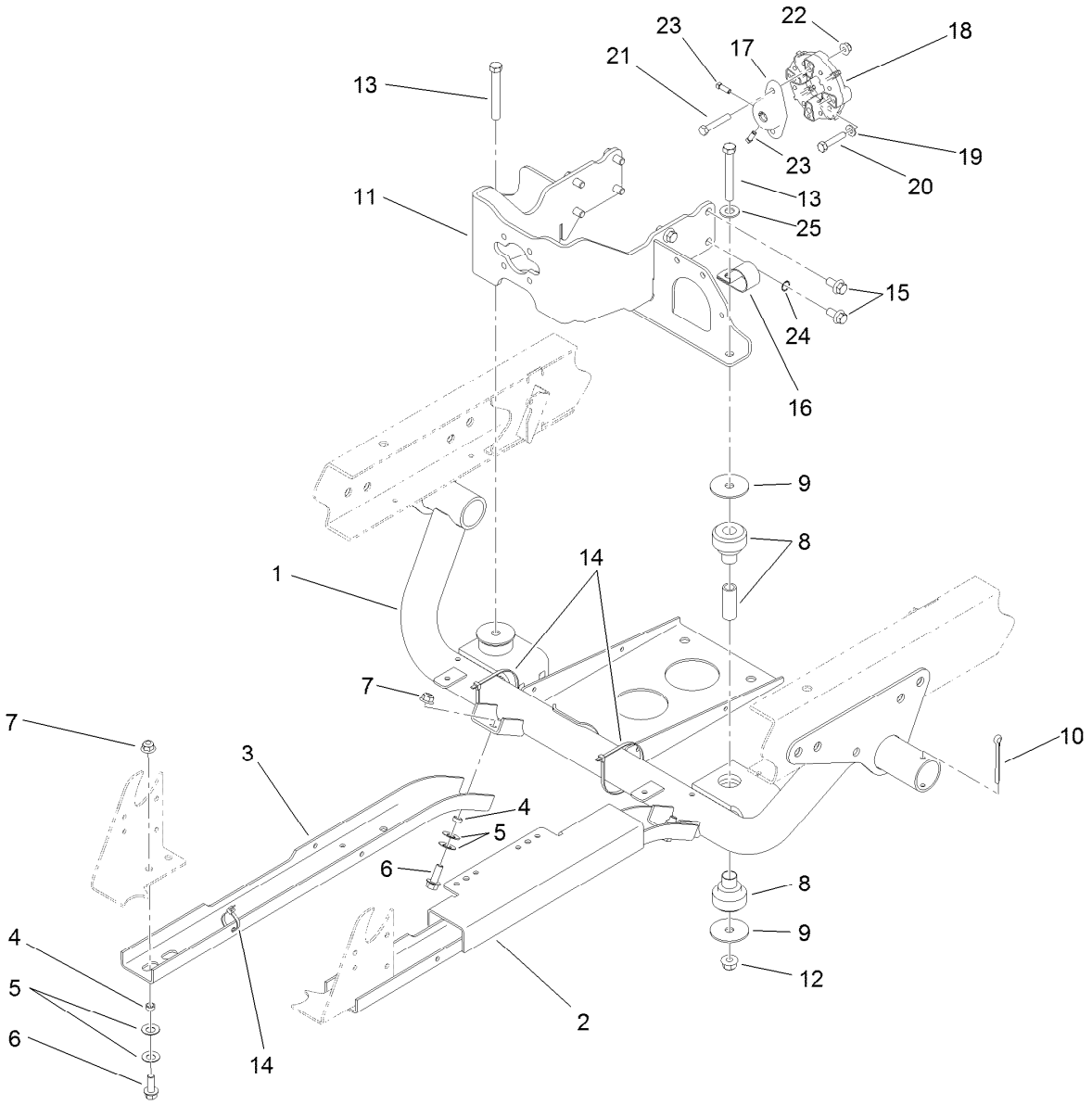

Engine Sub Frame Assembly

Ref.	Part Number	Qty.	Description
1	119-9679-03	1	Support-Engine
2	115-2215-03	1	Guard-LH
3	87-4730-03	1	Guard-Belly
4	76-9100	6	Spacer
5	3290-413	12	Washer-Belleville
6	3234-11	6	Screw-HHF
7	104-8301	6	Nut-HF, NI
8	106-7865	2	Mount-Engine
9	87-5100	4	Washer-Snubbing
10	3272-37	2	Pin-Cotter
11	121-6259-0P	1	Engine Pump Mount ASM [primed]
12	114-8417	2	Nut-HF, NI

Ref.	Part Number	Qty.	Description
13	324-13	2	Screw-HH
14	3290-379	4	Tie-Cable
15	120-4839	8	Screw-HHF
16	2412-82	1	Clamp-R
17	115-2169	1	Hub-Pump
18	119-0652	1	Coupler-Rubber
19	3256-23	2	Washer-Plain
20	33114-040	2	Screw-HH
21	322-21	2	Screw-HH
22	104-8300	2	Nut-HF, NI
23	3241-6	2	Screw-SQH
24	3254-20	1	Washer-Lock, Int
25	3256-26	1	Washer-Flat

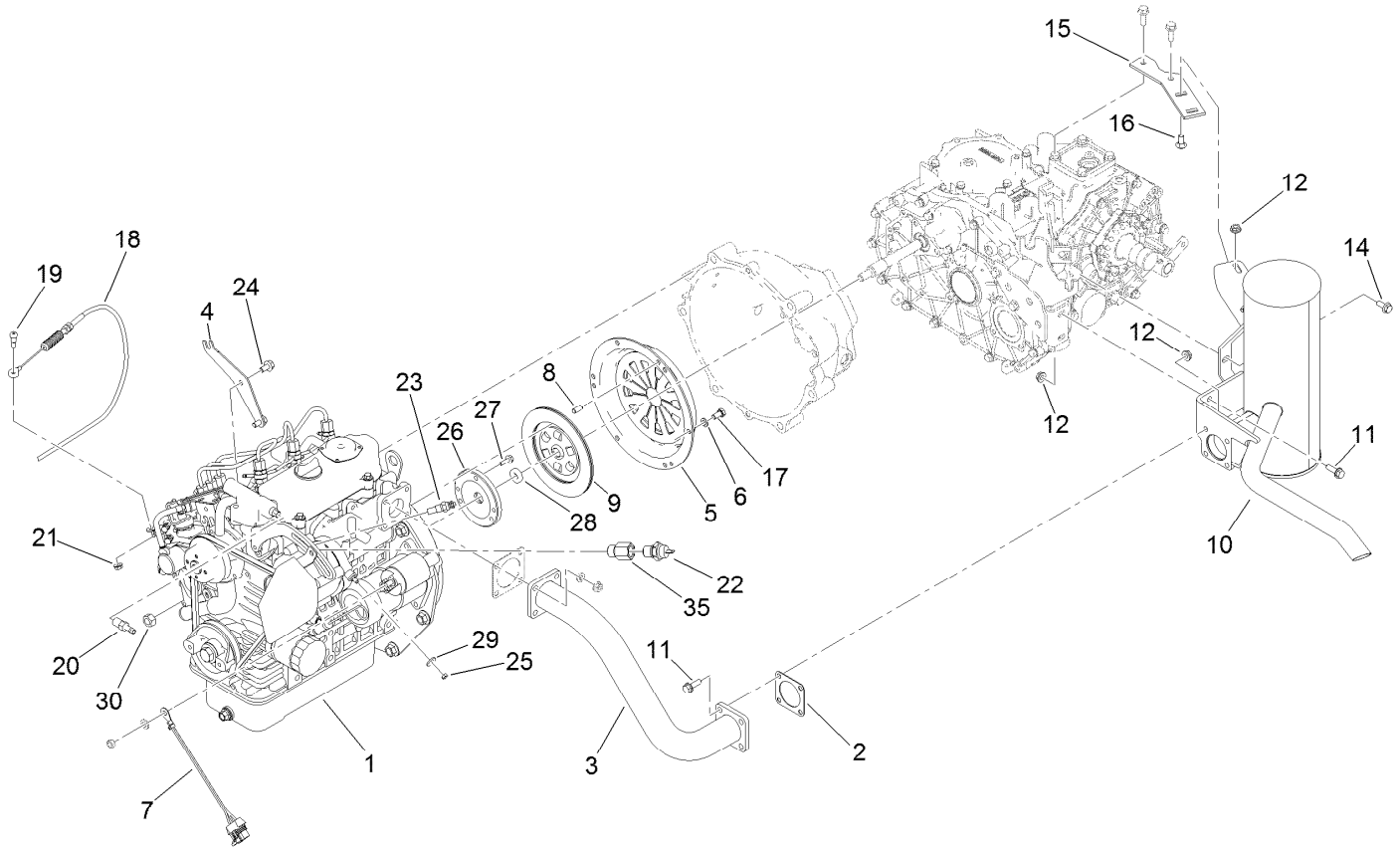

Engine Assembly

Ref.	Part Number	Qty.	Description
1	138-6904	1	Engine-Kubota, D902
2	105-4209	1	Gasket-Muffler
3	119-0860	1	Tube-Exhaust
4	120-4981-0P	1	Mount-Throttle Cable
5	87-4690	1	Cover-Clutch
6	3253-4	6	Washer-Lock
7	99-3441	1	Harness-Wire, Fusible Link
8	42-7160	3	Pin
9	87-4700	1	Disc-Clutch
10	133-0613	1	Muffler
11	3234-17	6	Screw-HHF
12	32128-20	8	Nut-HF
14	98-7977	1	Screw-HHF
15	105-9472	1	Plate-Mount, Muffler
16	3230-2	2	Bolt-CARR

Ref.	Part Number	Qty.	Description
17	33114-016	6	Screw-HH
18	120-4980	1	Cable-Throttle
19	119-4881	1	Bolt-Shoulder
20	115-1448	1	Fitting-Straight
21	32128-33	1	Nut-HF
22	117-4923	1	Switch-Temperature, Water
23	120-5075	1	Sender-Temperature
24	33104-016	2	Screw-HHF
25	33013-00	1	Nut-Hex
26	120-5006	1	Holder-Bearing, Pilot
27	33103-020	3	Screw-HHF
28	115-6870	1	Bearing-Ball, Sealed
29	3256-2	1	Washer-Flat
30	110-8815	1	Nut-Hex
35	138-9273	1	Adapter-Straight

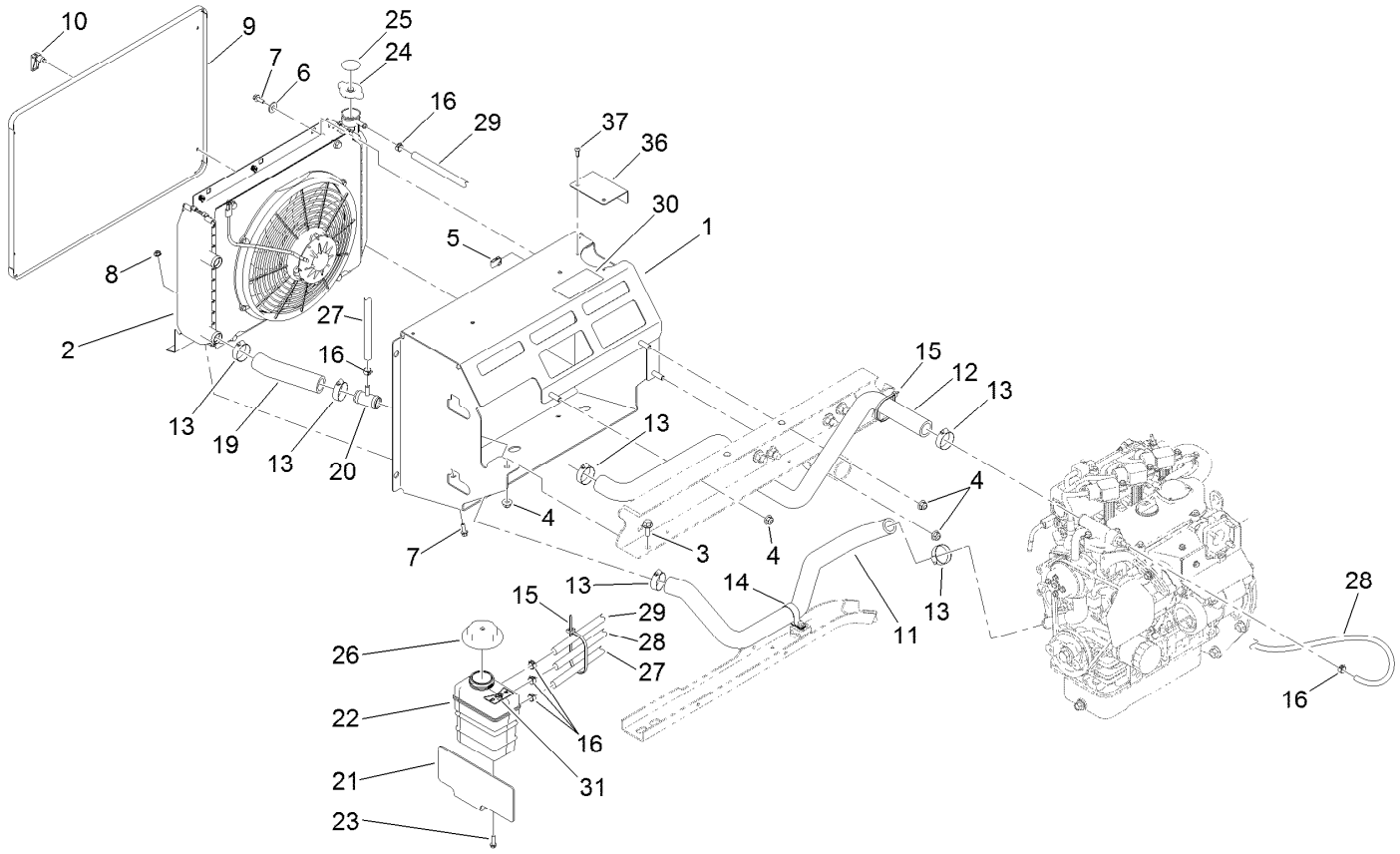

Cooling System Assembly

Ref.	Part Number	Qty.	Description
1	115-2434	1	Mount-Radiator
2		1	Radiator ASM ●
3	3234-11	1	Screw-HHF
4	104-8301	4	Nut-HF, NI
5	107069	2	Clip
6	3256-3	2	Washer-Flat
7	3234-4	4	Screw-HHF
8	32128-33	2	Nut-HF
9	115-2428-03	1	Screen-Radiator
10	74-5950	4	Latch-Swell
11	119-9487	1	Hose-Coolant, Lower
12	119-9486	1	Hose-Coolant, Upper
13	2412-34	6	Clamp-Hose
14	2412-74	1	R-Clamp
15	3290-379	4	Tie-Cable
16	92-2379	6	Clamp-Hose

Ref.	Part Number	Qty.	Description
19	120-4905	1	Hose-Coolant, Lower
20	120-4851	1	Tee
21	120-4906-0P	1	Plate-Mount, Tank
22	120-4856	1	Tank-Surge
23	46-8091	2	Screw-HWH
24	120-4866	1	Cap-System, Cooling
25	106-6755	1	Decal-Cap, Radiator
26	120-4867	1	Cap-Coolant, Threaded (15 PSI)
27	120-5019	1	Hose-Coolant
28	120-5020	1	Hose-Coolant
29	120-5021	1	Hose-Coolant
30	121-6286	1	Decal-Fill, Radiator
31	121-6287	1	Decal-Tank, Overflow
36	136-6288	1	Cover-Cap, Radiator
37	63-8590	2	Screw

● Not serviced separately

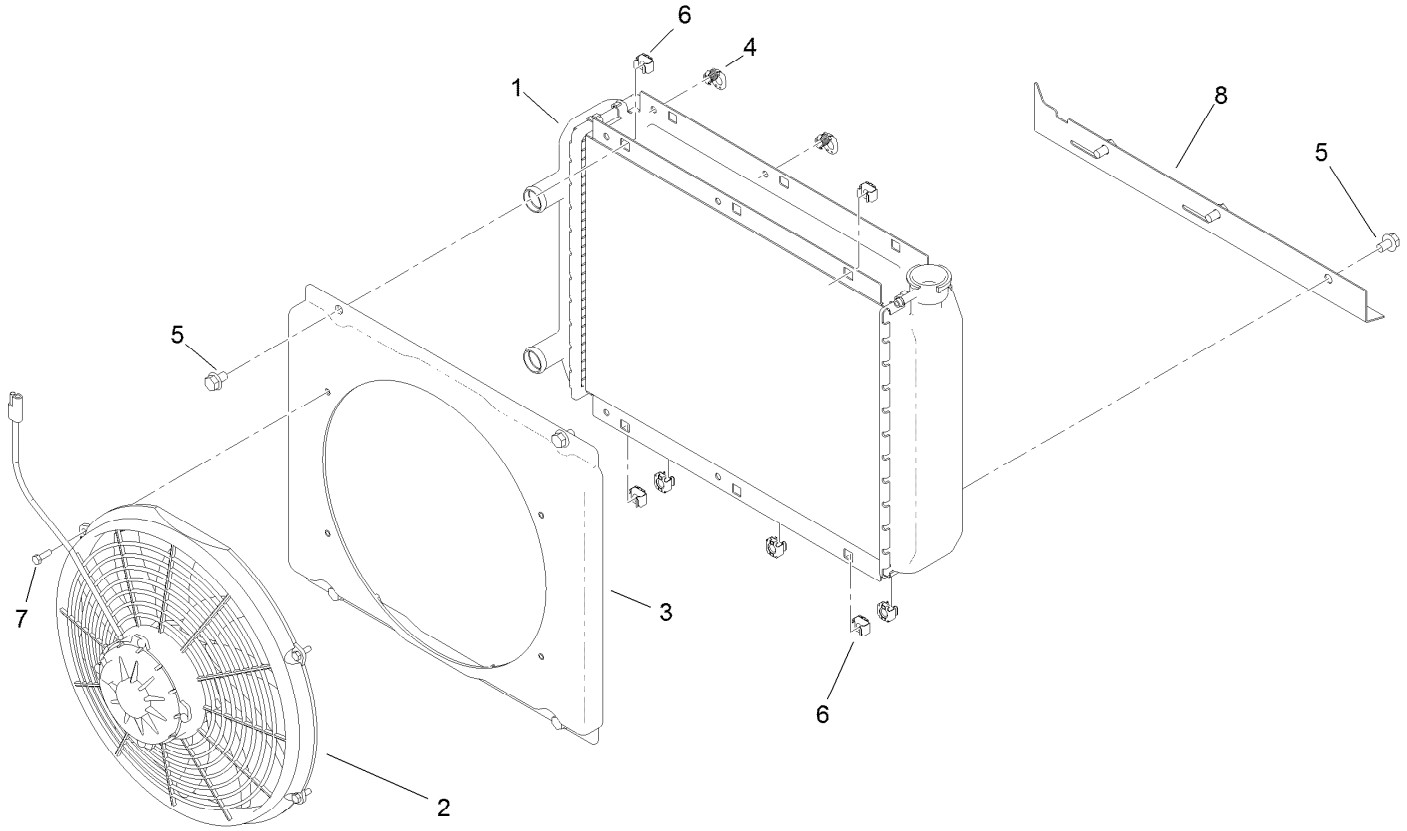

Radiator Assembly

Ref.	*Part Number*	*Qty.*	*Description*
1	114-8384	1	Radiator
2	114-8385	1	Fan-Electric
3	114-8386	1	Shroud
4	114-8387	2	Latch-Spring
5	3234-30	7	Screw-HHF
6	703856	7	Nut-Sq, Caged
7	60-6910	4	Screw-HH
8	115-7765	1	Plate-Mount, Lower

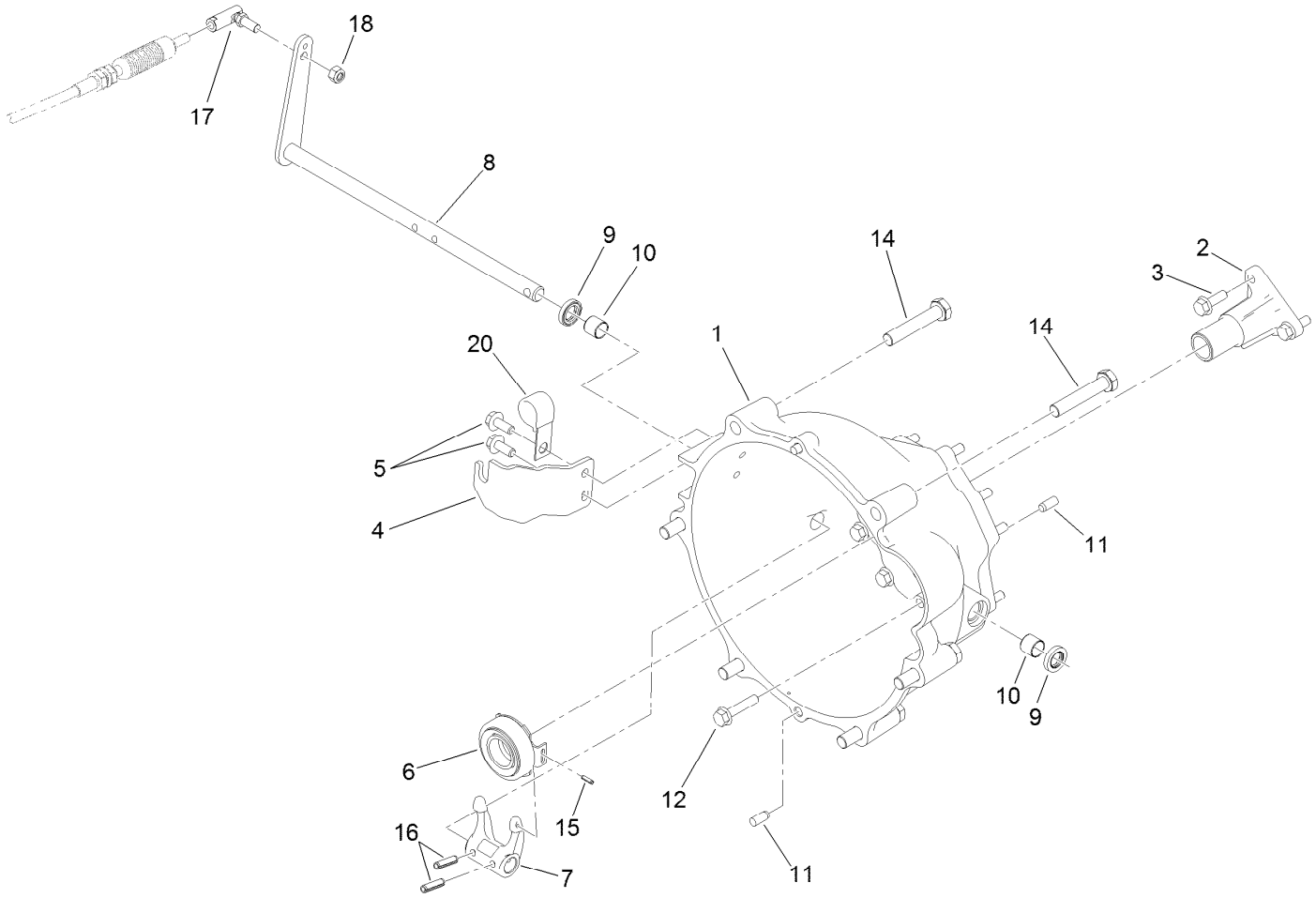

Clutch Linkage Assembly

Ref.	Part Number	Qty.	Description
1	119-9498	1	Bell Housing
2	120-4886	1	Guide-Release
3	33104-025	3	Screw-HHF
4	115-2313	1	Bracket-Cable, Clutch
5	98-7977	2	Screw-HHF
6	110-2538	1	Bearing-Release, Clutch
7	87-5300	1	Fork-Clutch
8	115-2311	1	Lever-Clutch
9	87-1920	2	Seal-Oil

Ref.	Part Number	Qty.	Description
10	87-3770	2	Bushing-Housing, Bell
11	87-1910	4	Pin-Dowel
12	33104-040	9	Screw-HHF
14	107-7983	6	Screw-HH
15	32121-7	1	Pin-Roll, Slotted
16	32121-24	2	Pin-Spring
17	2411-33	1	Balljoint-RH (W/Grommet)
18	3296-4	1	Nut-Lock
20	120-5018	1	Clip-Open J, Coated

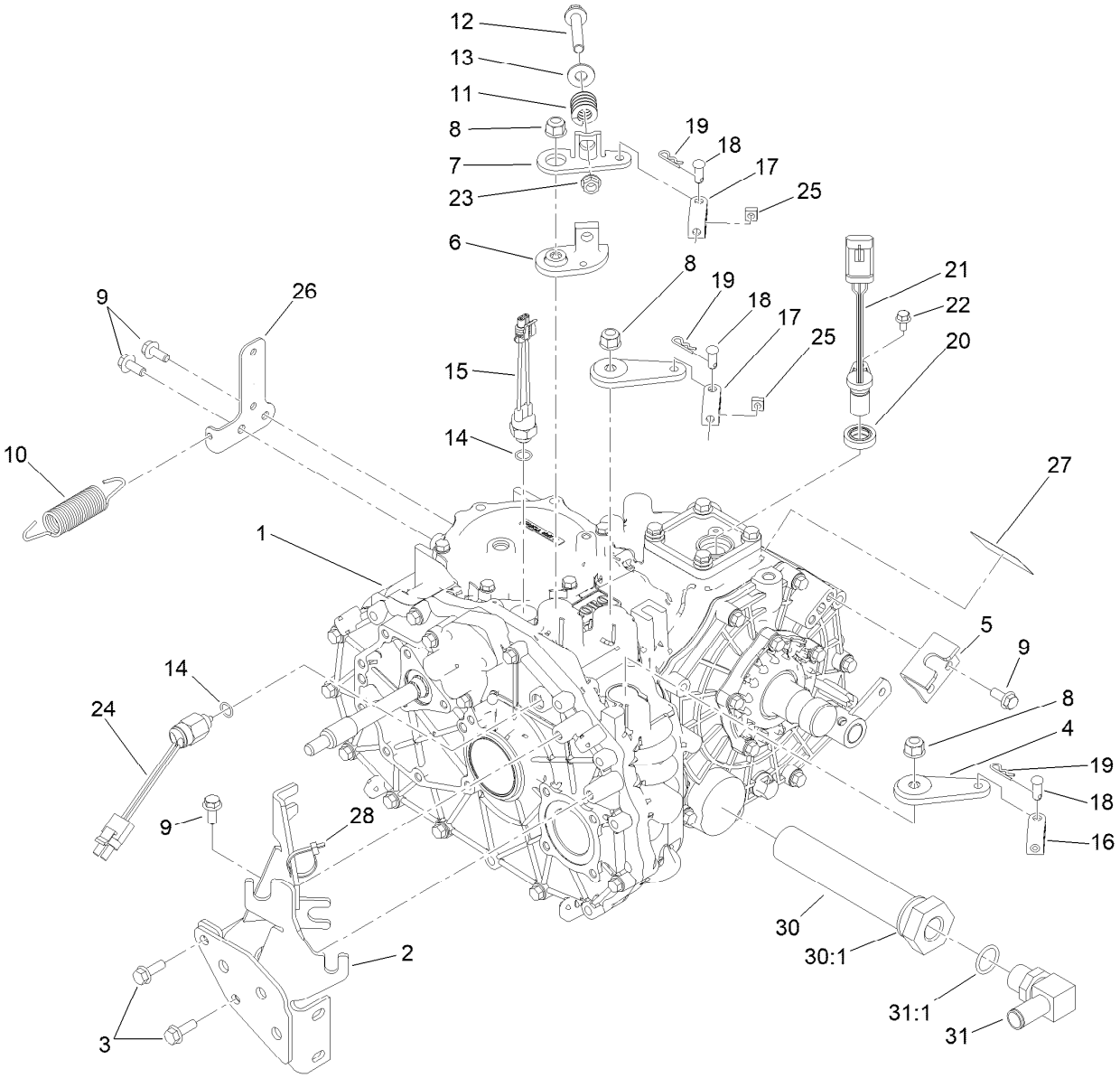

Transaxle Assembly

Ref.	Part Number	Qty.	Description
1	115-7783	1	2 Wheel Drive Transaxle ASM
2	105-4207-0P	1	Cable Mount ASM,Welded
3	33104-025	2	Screw-HHF
4	132-6764	2	Lever-Shift
5	87-4470	1	Bracket-Lock, Differential
6	87-7970	1	Arm-Shift
7	87-8250	1	Plate-Arm, Shift
8	103-9511	3	Nut-Lock, NI
9	98-7977	5	Screw-HHF
10	68-9950	1	Spring-Traction
11	87-6910	1	Spring-Compression
12	66-9302	1	Screw-HHF Lock
13	3256-4	1	Washer-Flat
14	237-30	2	O-Ring
15	72-4310	1	Switch-Ball
16	87-7160	1	Clevis-Cable

Ref.	Part Number	Qty.	Description
17	87-2310	2	Clevis-Cable
18	283-62	3	Pin-Clevis
19	3290-307	3	Pin-Cotter
20	92-3735	1	Seal-Sensor, Oil
21	120-4800	1	Sensor-Geartooth
22	33103-012	1	Screw-HHF
23	3290-357	1	Nut-HSF
24	87-6710	1	Switch-Transmission
25	140-4804	2	Nut-Square
26	145-2083	1	Bracket-Pump, Fuel
27	115-7741	1	Decal-Oil, Transmission
28	3290-379	1	Tie-Cable
30	87-3990	1	Strainer-Transaxle
30:1	237-101	1	O-Ring
31	353-987	1	Fitting-Elbow, 90
31:1	237-81	1	O-Ring

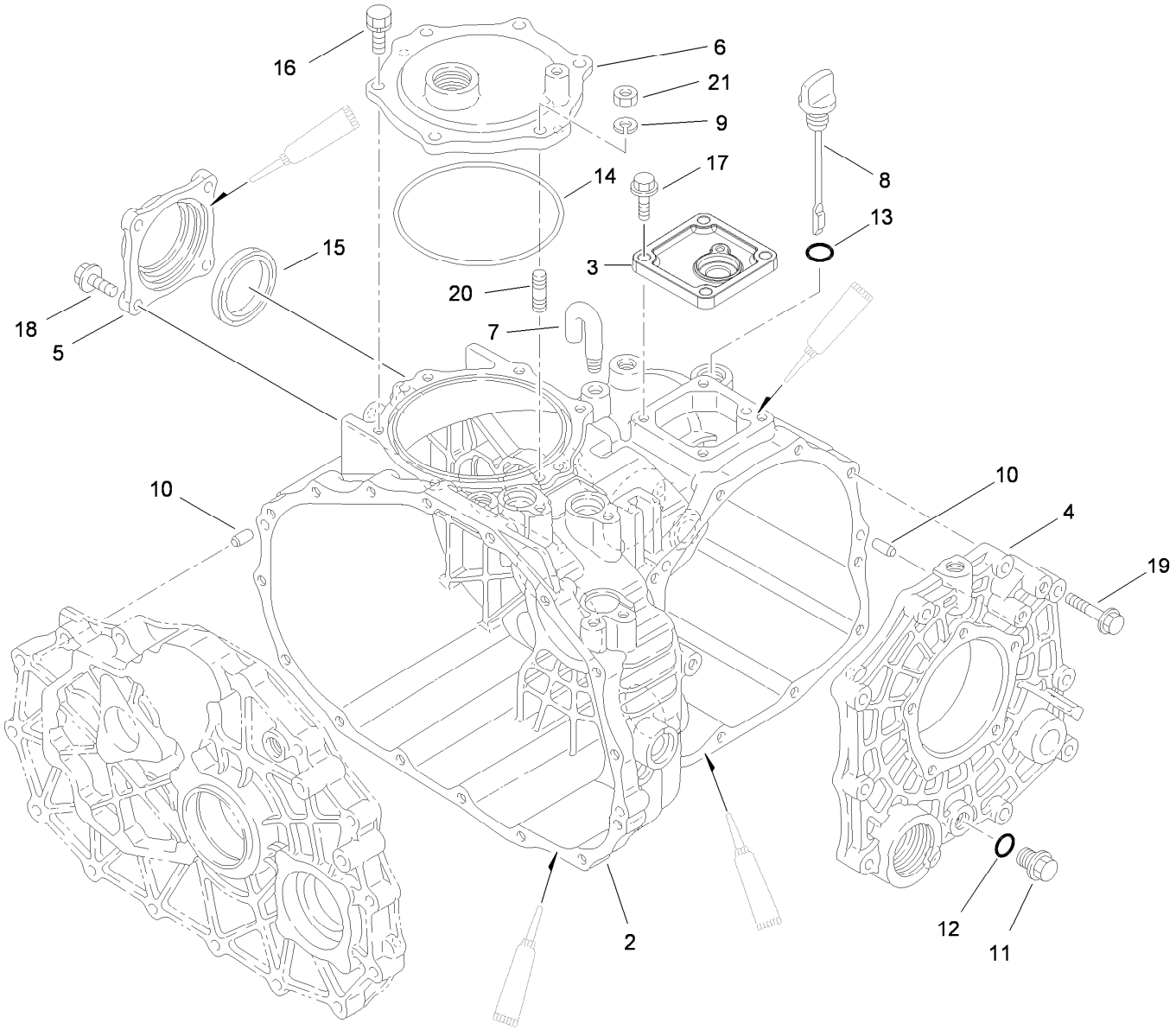

Case Assembly
Transaxle Assembly No. 115-7783

Ref.	Part Number	Qty.	Description
2	92-0651	1	Case-Transmission
3	92-0810	1	Cover-Upper, Sensor
4	92-0653	1	Cover-Side
5	92-0655	1	Cover-Seal, Axle
6	92-0656	1	Cover-Upper, PTO
7	92-0743	1	Breather-Air
8	92-0662	1	Cap-Oil
9	92-0762	1	Washer-Spring
10	92-0765	4	Pin-Parallel
11	92-0773	1	Plug-Drain

Ref.	Part Number	Qty.	Description
12	92-0787	1	O-Ring
13	92-0788	1	O-Ring
14	92-0790	1	O-Ring
15	92-0793	1	Seal-Oil
16	92-0796	5	Bolt
17	33104-025	4	Screw-HHF
18	33104-025	4	Screw-HHF
19	33104-040	10	Screw-HHF
20	92-0805	1	Bolt 8X20
21	68-9400	1	Nut-Flange

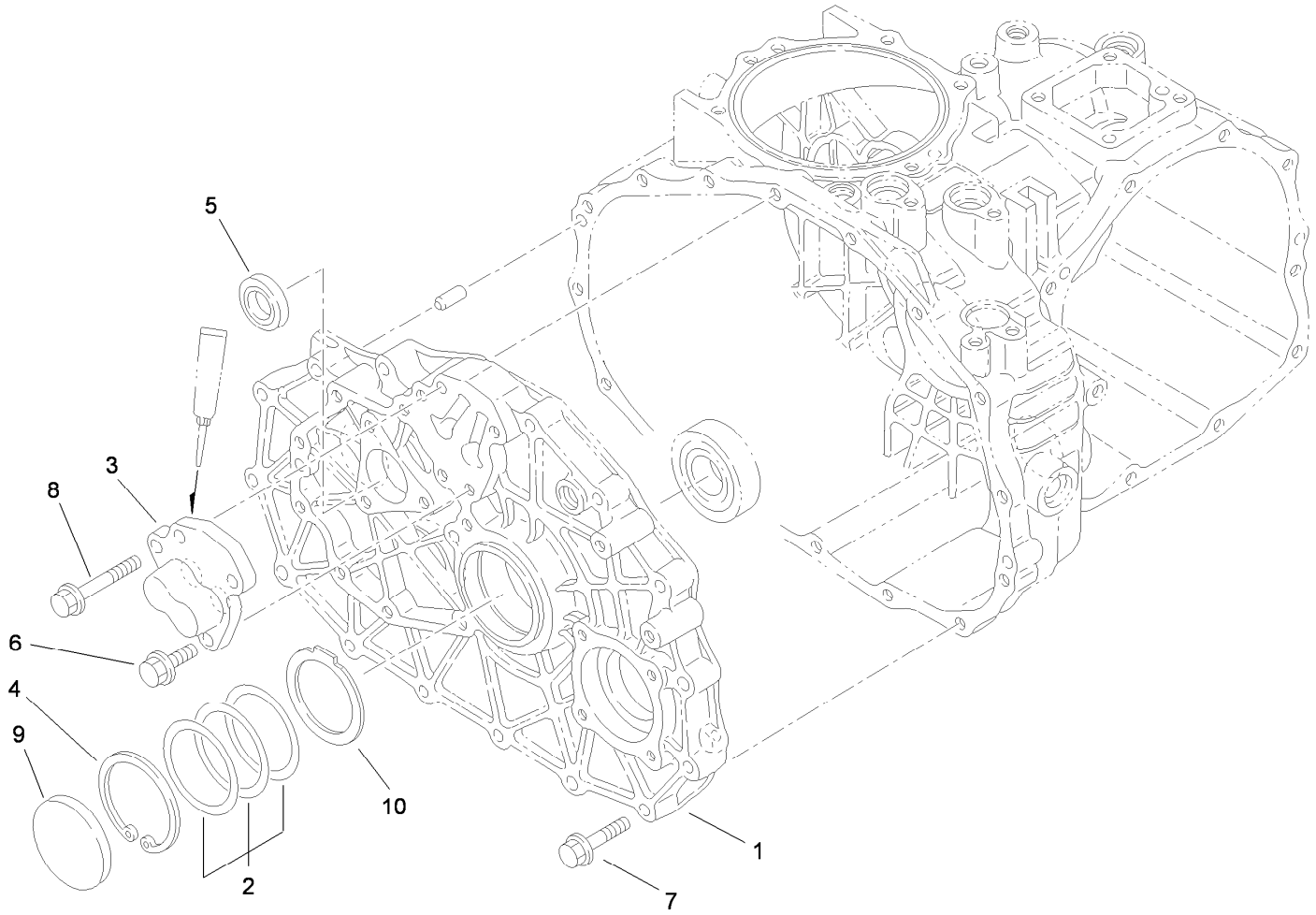

Center Plate Assembly
Transaxle Assembly No. 115-7783

Ref.	*Part Number*	*Qty.*	*Description*
1	100-4461	1	Plate-Center
2	100-4460	1	Shim-Set
3	92-0706	1	Shaft-Fork
4	92-0759	1	Ring-Snap
5	92-0791	1	Seal-Oil
6	33104-025	3	Screw-HHF
7	33104-040	15	Screw-HHF
8	33104-050	1	Screw-HHF
9	92-0807	1	Cap-Sealing
10	100-4465	1	Shim (W/Tab)

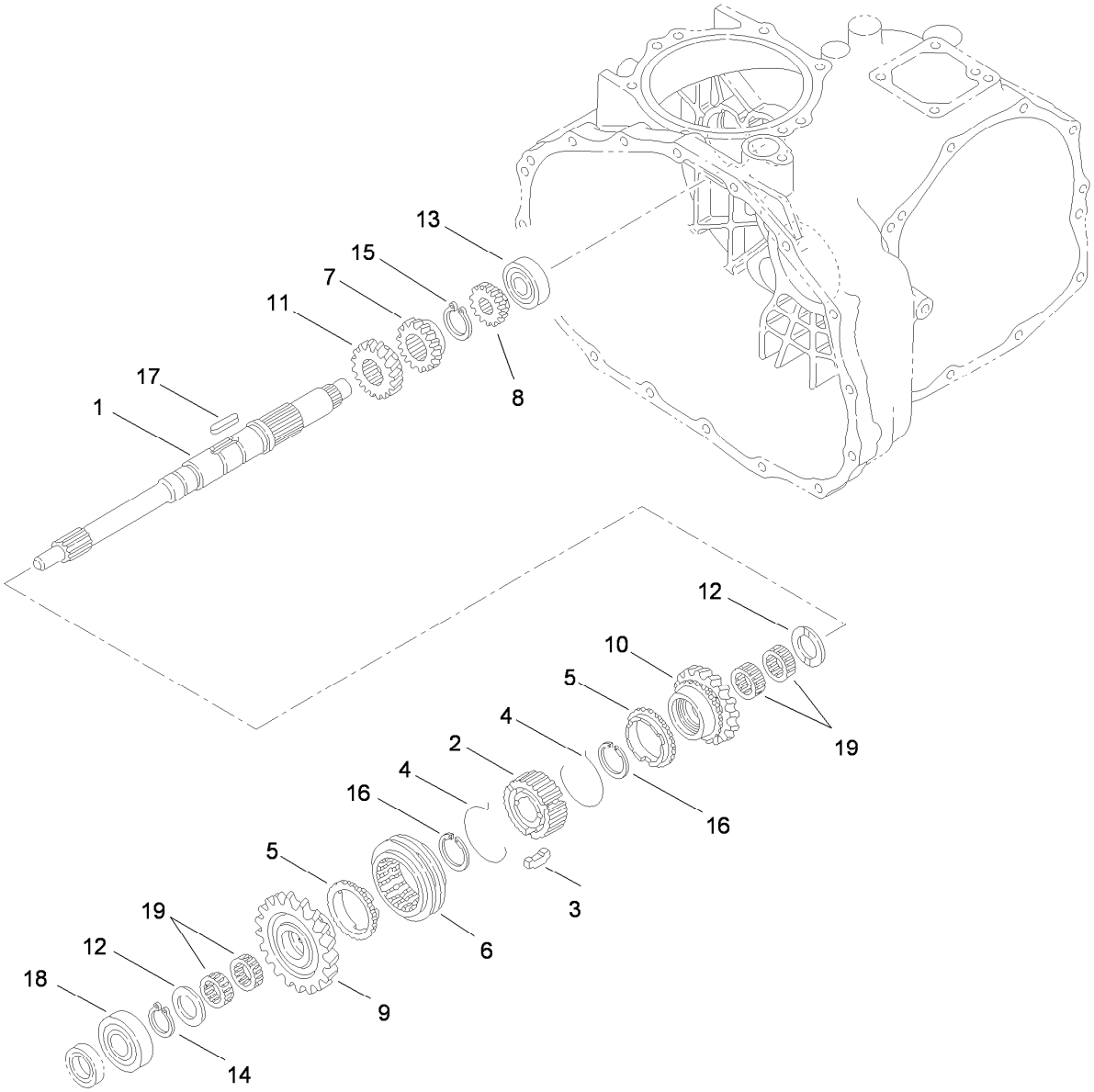

Main Shaft Assembly
Transaxle Assembly No. 115-7783

Ref.	Part Number	Qty.	Description
1	92-0663	1	Shaft-Main
2	92-0664	1	Hub-Synchro
3	92-0665	3	Key-Synchro
4	92-0666	2	Spring-Synchro
5	92-0667	2	Ring-Synchro
6	92-0668	1	Shifter-Synchro
7	92-0672	1	Gear-Main, 18 Tooth
8	92-0673	1	Gear-Main, 14 Tooth
9	110-2521	1	Gear-Main, 27 Tooth
10	110-2522	1	Gear- Main, 24 Tooth

Ref.	Part Number	Qty.	Description
11	92-0687	1	Gear-Main, 16 Tooth
12	92-0740	2	Washer-Thrust
13	92-0650	1	Bearing
14	92-0753	1	Ring-Snap
15	92-0754	1	Ring-Snap
16	92-0763	2	Ring-Snap
17	92-0772	1	Key
18	251-8	1	Bearing-Ball
19	92-0781	4	Bearing-Needle

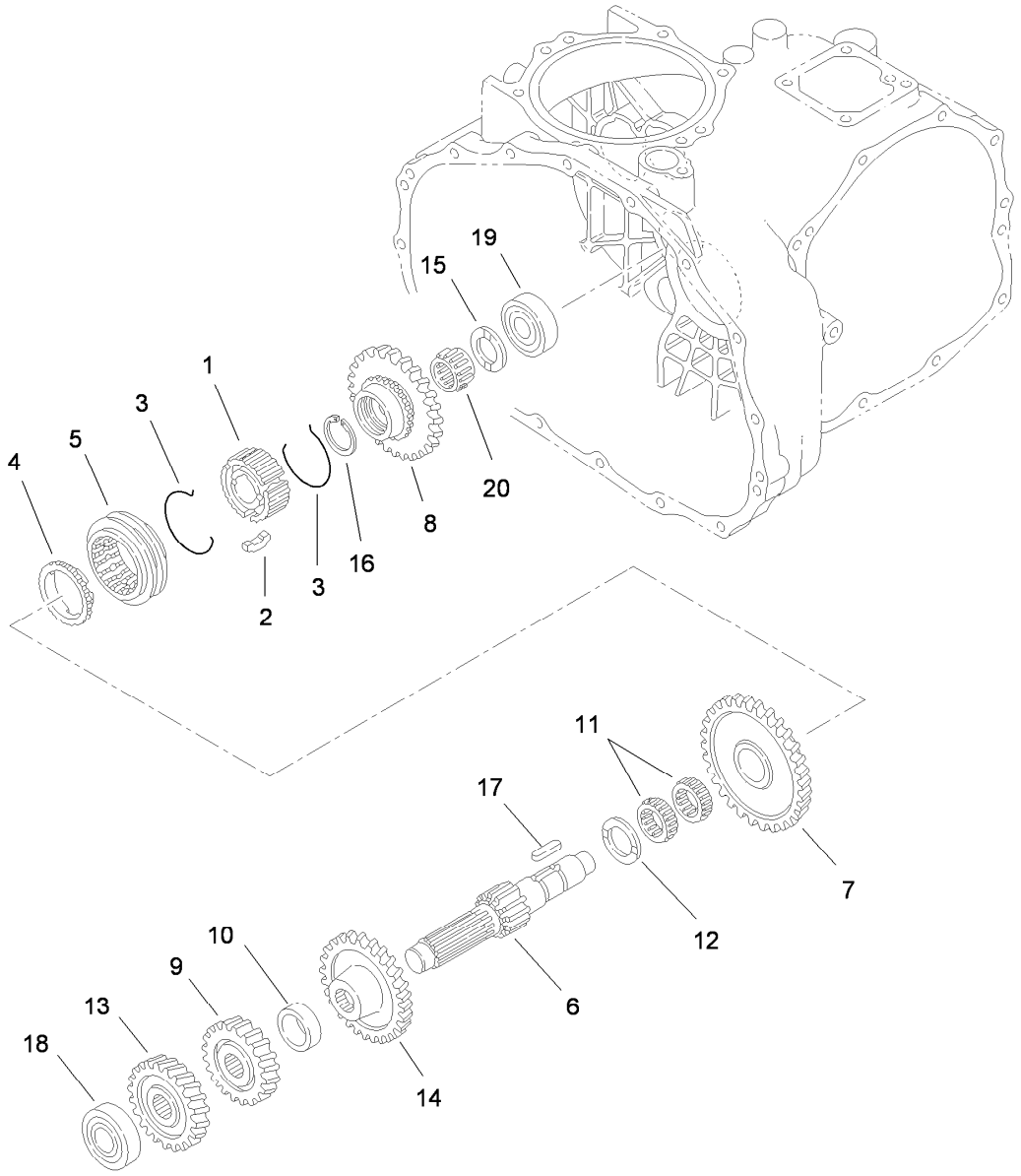

Reduction Shaft Assembly
Transaxle Assembly No. 115-7783

Ref.	Part Number	Qty.	Description
1	92-0664	1	Hub-Synchro
2	92-0665	3	Key-Synchro
3	92-0666	2	Spring-Synchro
4	92-0667	1	Ring-Synchro
5	92-0668	1	Shifter-Synchro
6	92-0674	1	Shaft-Reduction
7	110-2524	1	Gear- Reduction, 49 Tooth
8	92-0819	1	Gear-Reduction, 40 Tooth
9	92-0679	1	Gear-Reduction, H23 Tooth
10	92-0680	1	Collar

Ref.	Part Number	Qty.	Description
11	92-0681	2	Bearing-Needle
12	92-0682	1	Washer-Thrust
13	92-0822	1	Gear-Reduction, 28 Tooth
14	92-0823	1	Gear-Reduction, 43 Tooth
15	92-0740	1	Washer-Thrust
16	92-0763	1	Ring-Snap
17	92-0772	1	Key
18	105-7985	1	Bearing
19	92-0778	1	Bearing
20	92-0782	1	Bearing-Needle

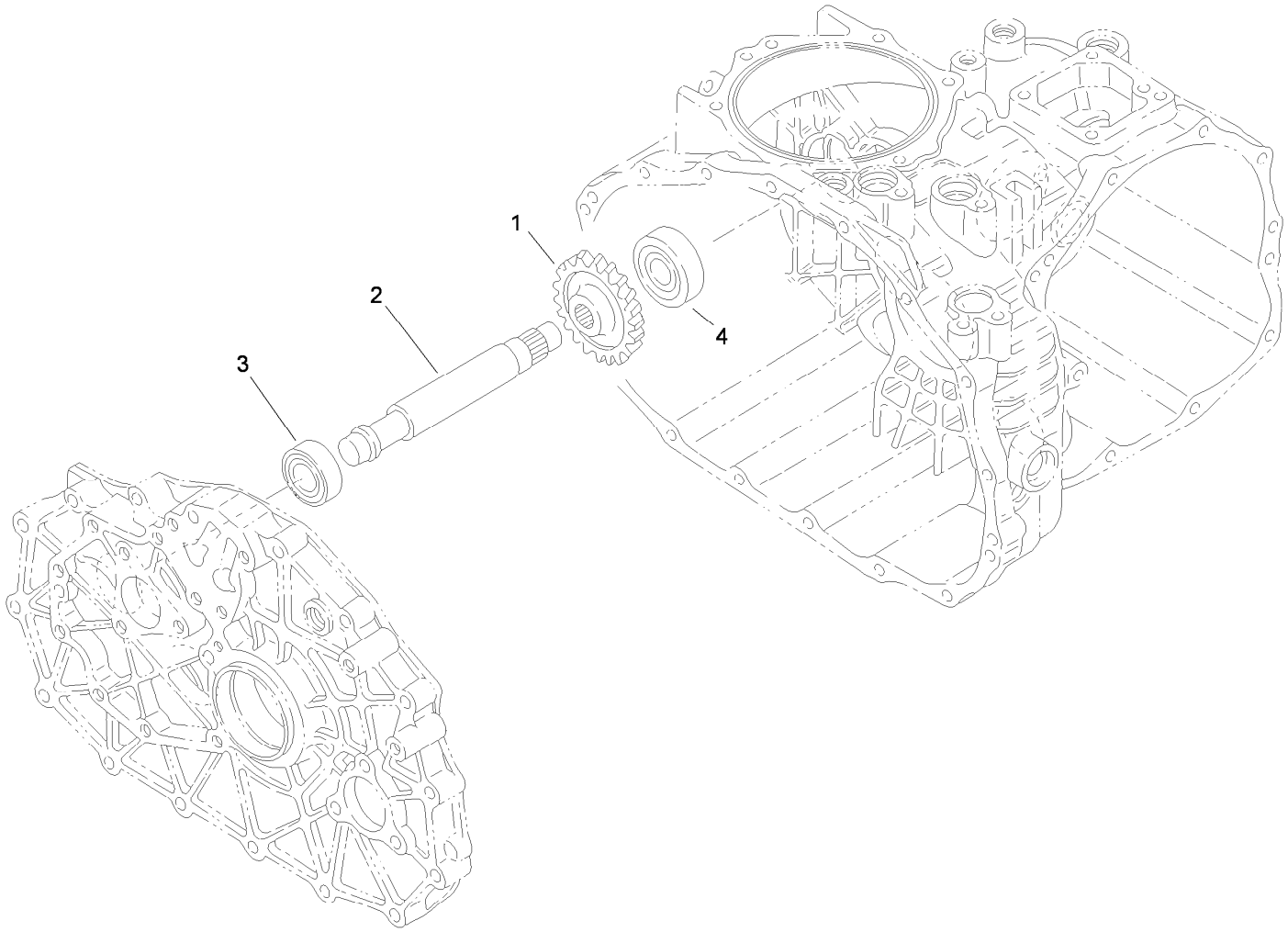

Reverse Shaft Assembly
Transaxle Assembly No. 115-7783

Ref.	*Part Number*	*Qty.*	*Description*
1	92-0684	1	Gear-Reverse, 33 Tooth
2	92-0824	1	Shaft-Idler, Reverse
3	251-346	1	Bearing-Ball
4	92-0778	1	Bearing

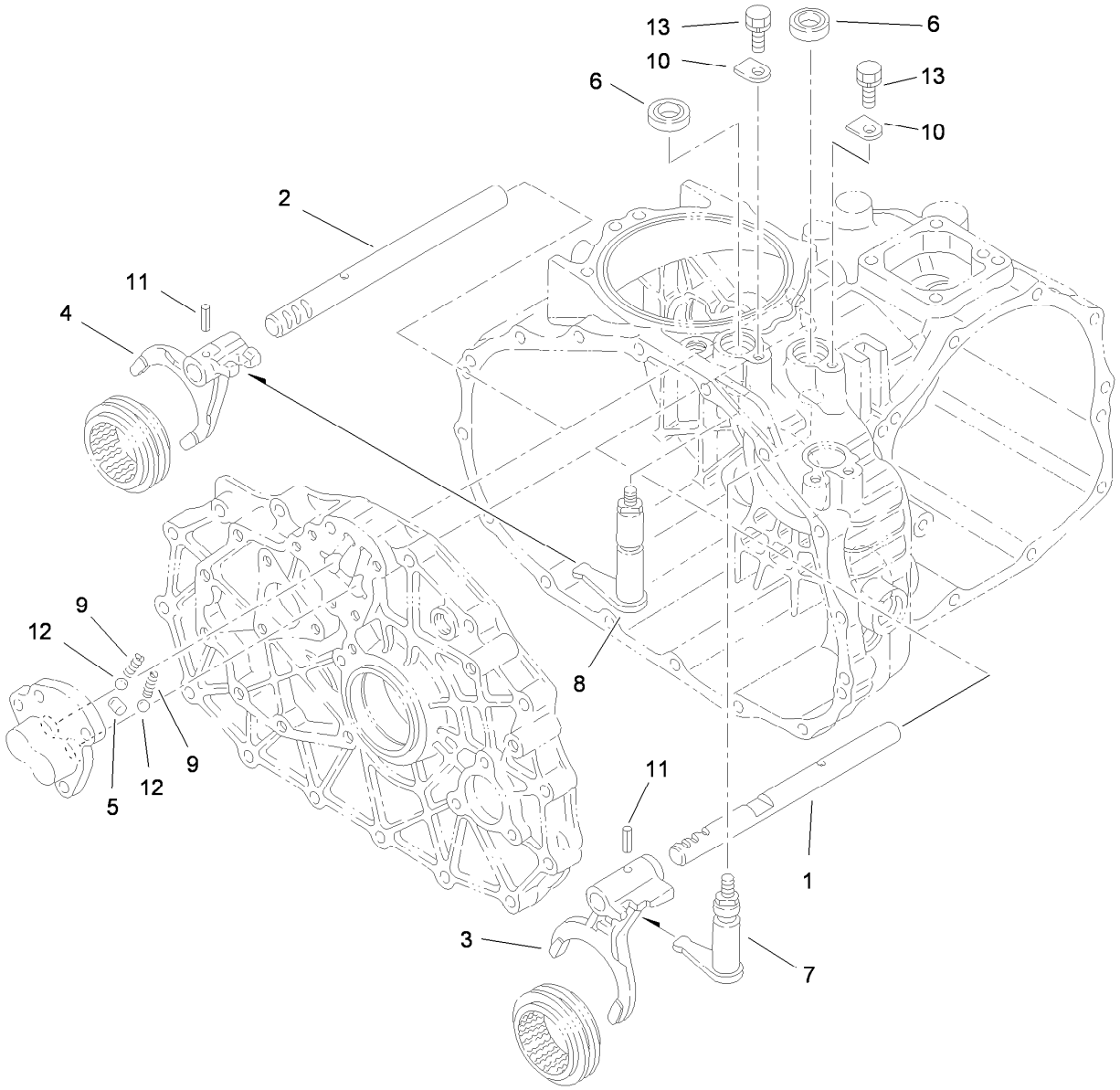

Main Shift Assembly
Transaxle Assembly No. 115-7783

Ref.	*Part Number*	*Qty.*	*Description*
1	92-0698	1	Shaft-Fork
2	92-0699	1	Shaft-Fork
3	92-0700	1	Fork-Shift
4	92-0701	1	Fork-Shift
5	92-0705	1	Lock-Spindle
6	92-0729	2	Seal-Oil
7	92-0816	1	Arm-Shift
8	92-0817	1	Arm-Shift
9	92-0731	2	Spring
10	92-0732	2	Plate-Keeper
11	92-0769	2	Pin-Roll
12	92-0785	2	Ball-Steel
13	33104-016	2	Screw-HHF

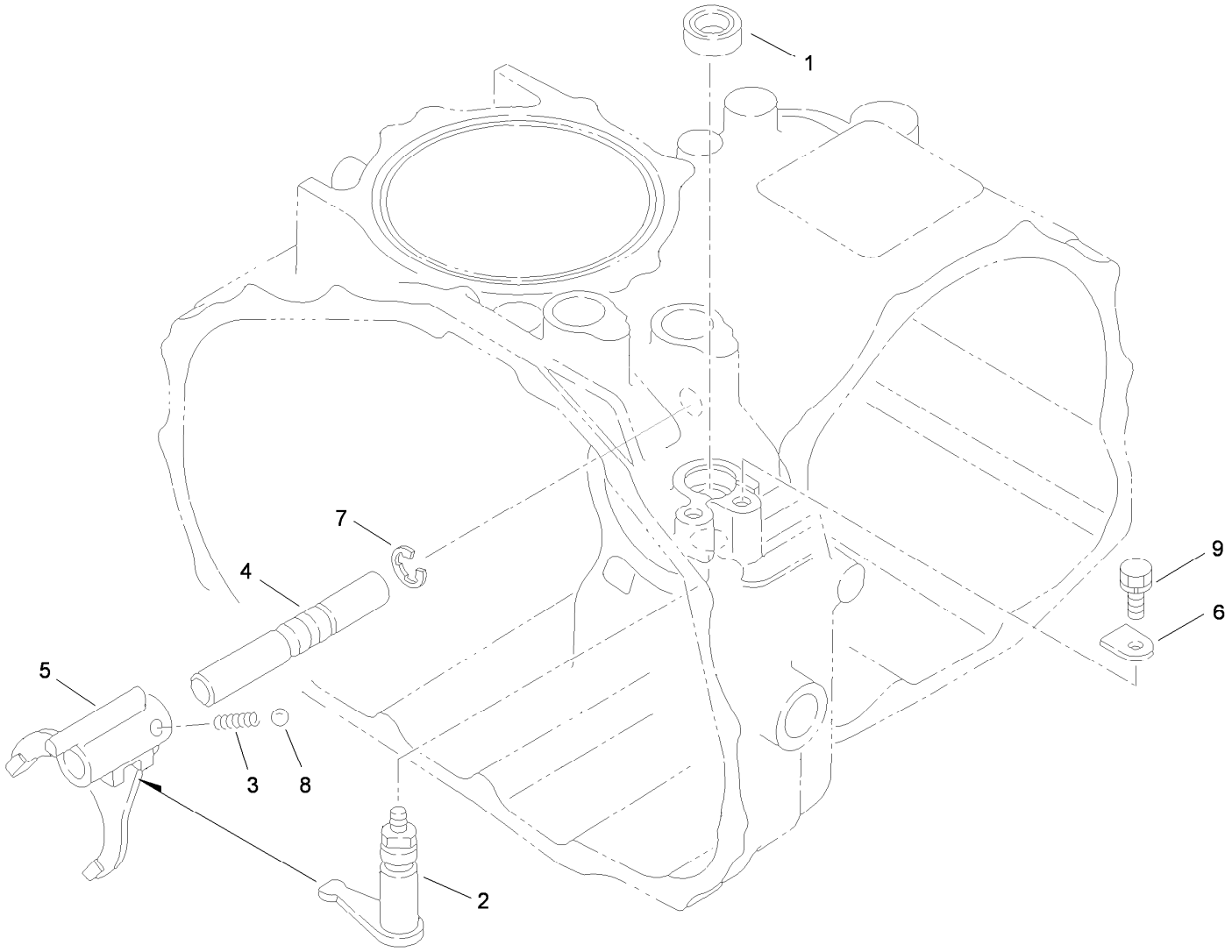

Hi-Lo Shift Assembly
Transaxle Assembly No. 115-7783

Ref.	*Part Number*	*Qty.*	*Description*
1	92-0729	1	Seal-Oil
2	92-0818	1	Arm-Shift
3	92-0731	1	Spring
4	92-0708	1	Shaft-Fork
5	92-0709	1	Fork-Shift
6	92-0732	1	Plate-Keeper
7	92-0761	1	Ring-E
8	92-0785	1	Ball-Steel
9	33104-016	1	Screw-HHF

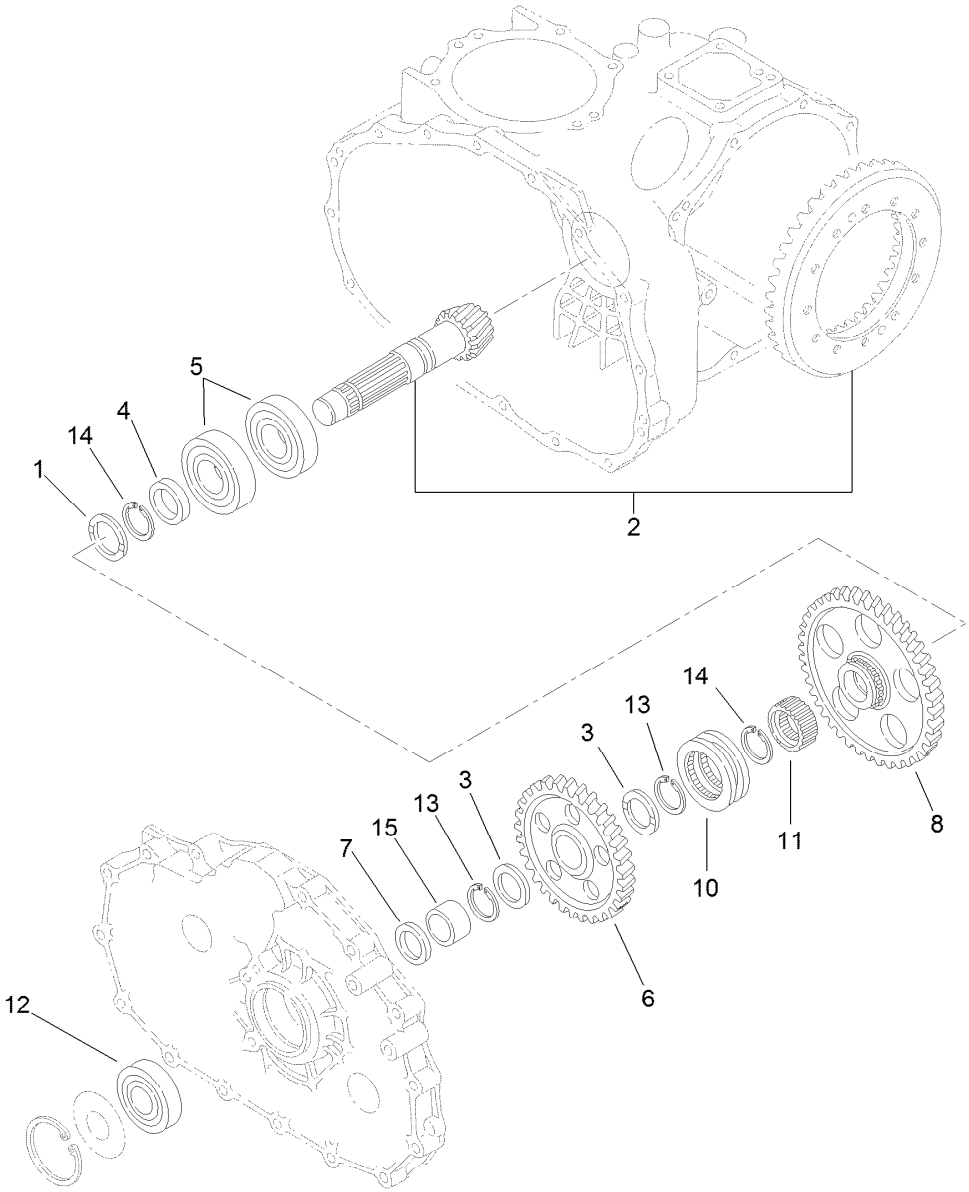

Countershaft Assembly
Transaxle Assembly No. 115-7783

Ref.	*Part Number*	*Qty.*	*Description*
1	92-0741	1	Washer-Thrust
2	105-7983	1	Countershaft And Ring Gear ASM
3	92-0711	2	Washer-Thrust
4	92-0713	1	Collar
5	92-0714	2	Bearing
6	92-0715	1	Gear-Countershaft
7	92-0716	1	Collar
8	92-0717	1	Gear-Countershaft
10	92-0718	1	Shifter
11	105-7986	1	Collar-Spline
12	92-0712	1	Bearing-Ball
13	105-7987	2	Ring-Snap
14	92-0755	2	Ring-Snap
15	92-0783	1	Race-Inner

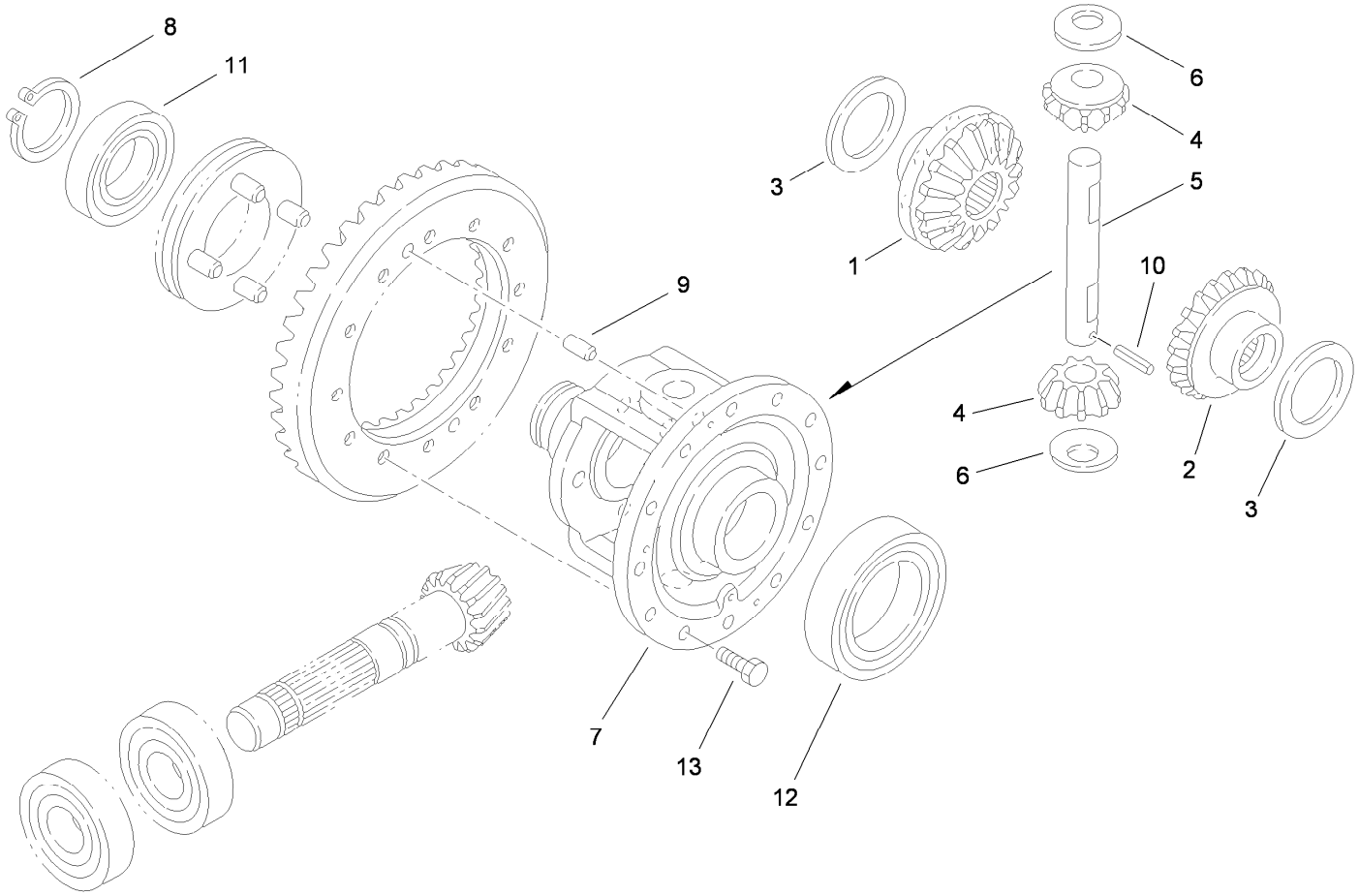

Differential Gear Assembly
Transaxle Assembly No. 115-7783

Ref.	*Part Number*	*Qty.*	*Description*
1	92-0745	1	Gear-Side, LH
2	92-0746	1	Gear-Side, RH
3	92-0747	2	Side-Gear, Left Inner
4	92-0748	2	Pinion-Differential
5	92-0749	1	Shaft-Pinion
6	92-0750	2	Washer
7	92-0720	1	Case-Differential
8	92-0756	1	Ring-Snap
9	92-0765	2	Pin-Parallel
10	92-0768	1	Pin-Roll, Spring
11	92-0775	1	Bearing
12	92-0776	1	Bearing
13	92-0803	12	Bolt

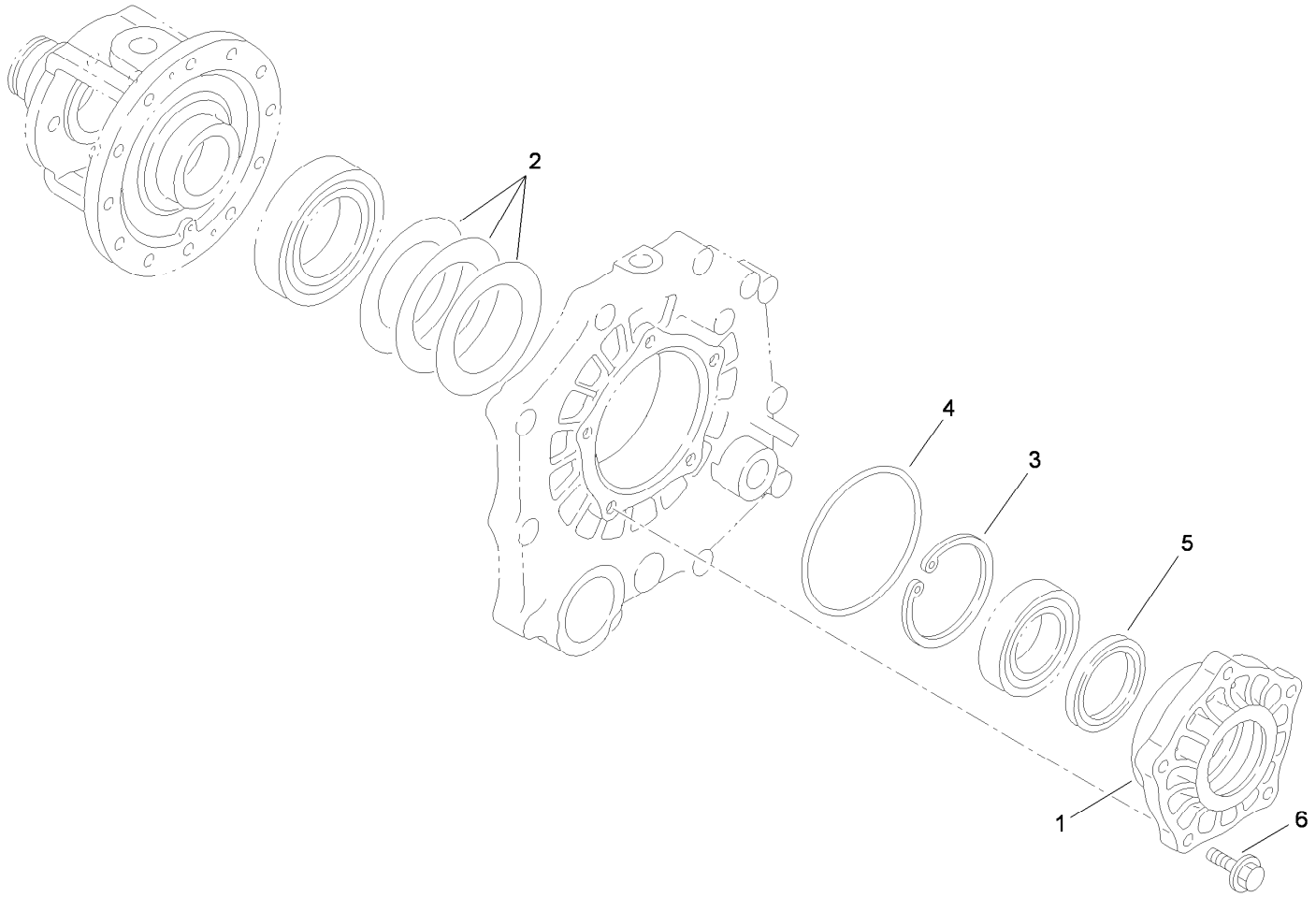

Differential Carrier Assembly
Transaxle Assembly No. 115-7783

Ref.	*Part Number*	*Qty.*	*Description*
1	92-0654	1	Carrier-Differential
2	92-0809	1	Set-Shim
3	92-0760	1	Ring-Snap
4	92-0789	1	O-Ring
5	92-0793	1	Seal-Oil
6	33104-030	5	Screw-HHF

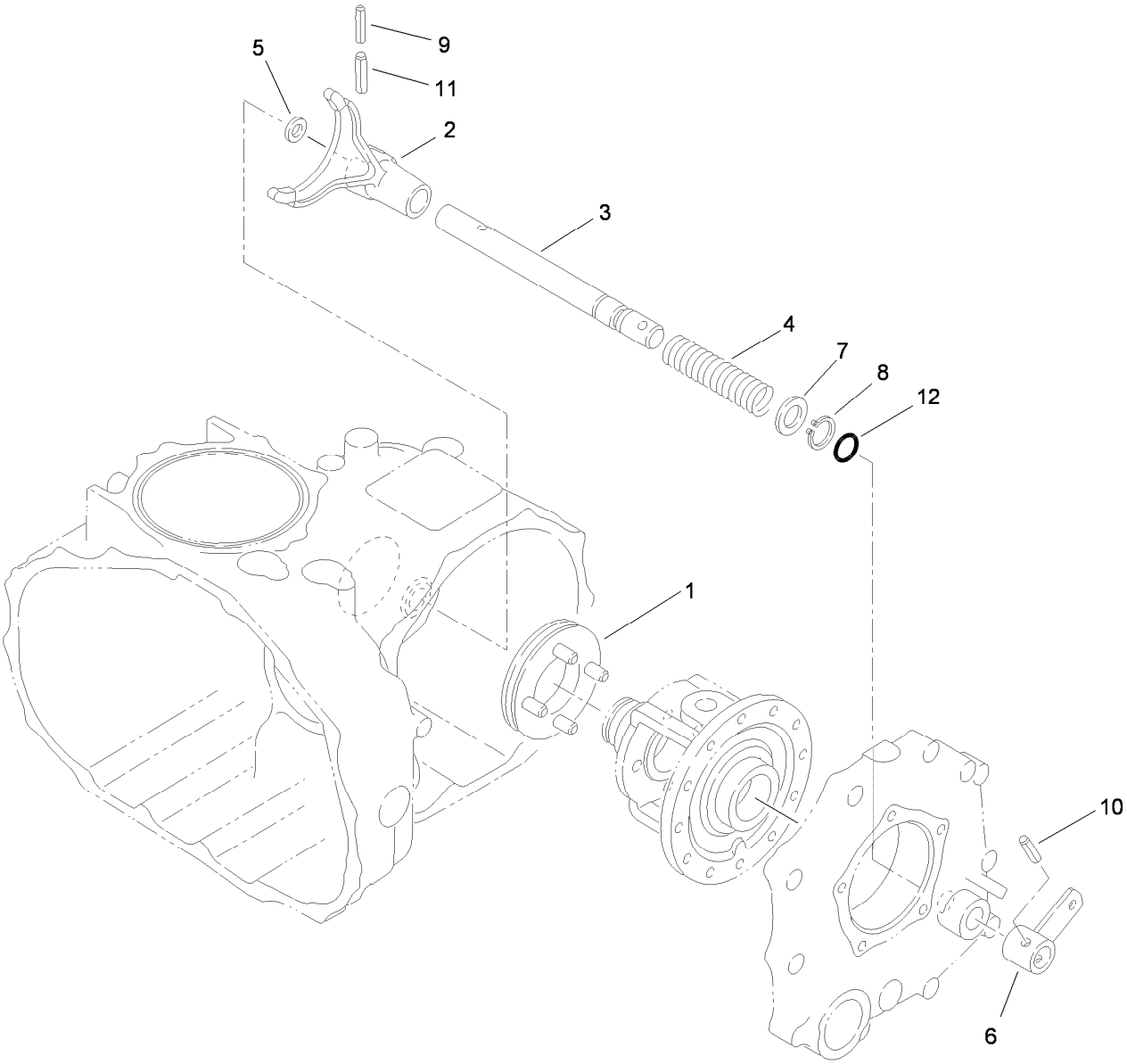

Differential Lock Assembly
Transaxle Assembly No. 115-7783

Ref.	*Part Number*	*Qty.*	*Description*
1	92-0730	1	Slider-Differential, Lock
2	92-0721	1	Fork-Lock, Differential
3	92-0722	1	Shaft-Fork, Lock Differential
4	92-0723	1	Spring-Lock, Differential
5	92-0744	1	Washer
6	92-0724	1	Arm-Lock, Differential
7	92-0733	1	Washer
8	92-0753	1	Ring-Snap
9	92-0768	1	Pin-Roll, Spring
10	92-0770	1	Pin-Roll, Spring
11	92-0771	1	Pin-Roll, Spring
12	92-0787	1	O-Ring

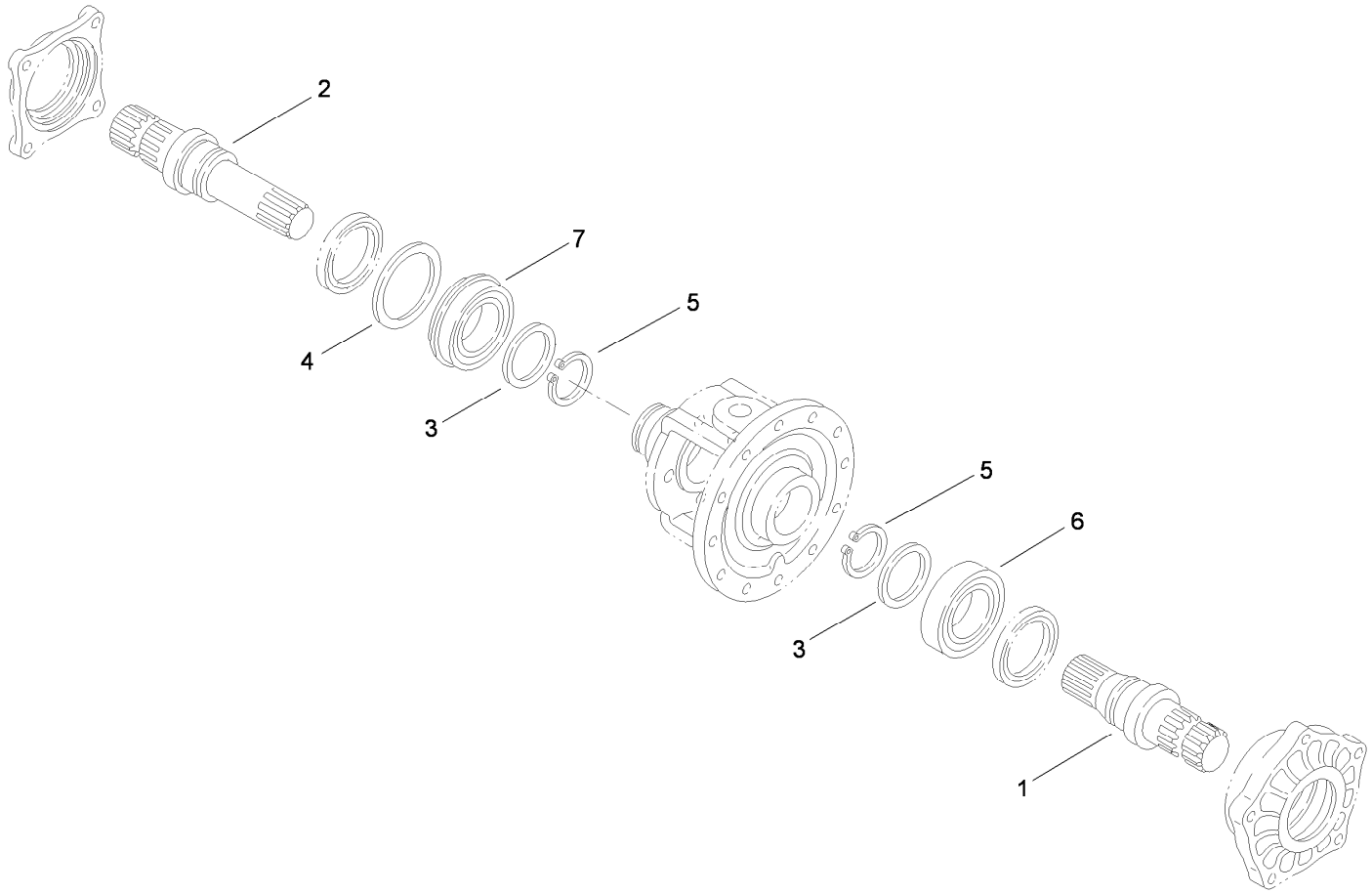

Axle Shaft Assembly
Transaxle Assembly No. 115-7783

Ref.	*Part Number*	*Qty.*	*Description*
1	92-0725	1	Shaft-Axle, Left
2	92-0726	1	Shaft-Axle, Right
3	92-0727	2	Washer
4	92-0728	1	Washer
5	92-0756	2	Ring-Snap
6	92-0775	1	Bearing
7	92-0780	1	Bearing

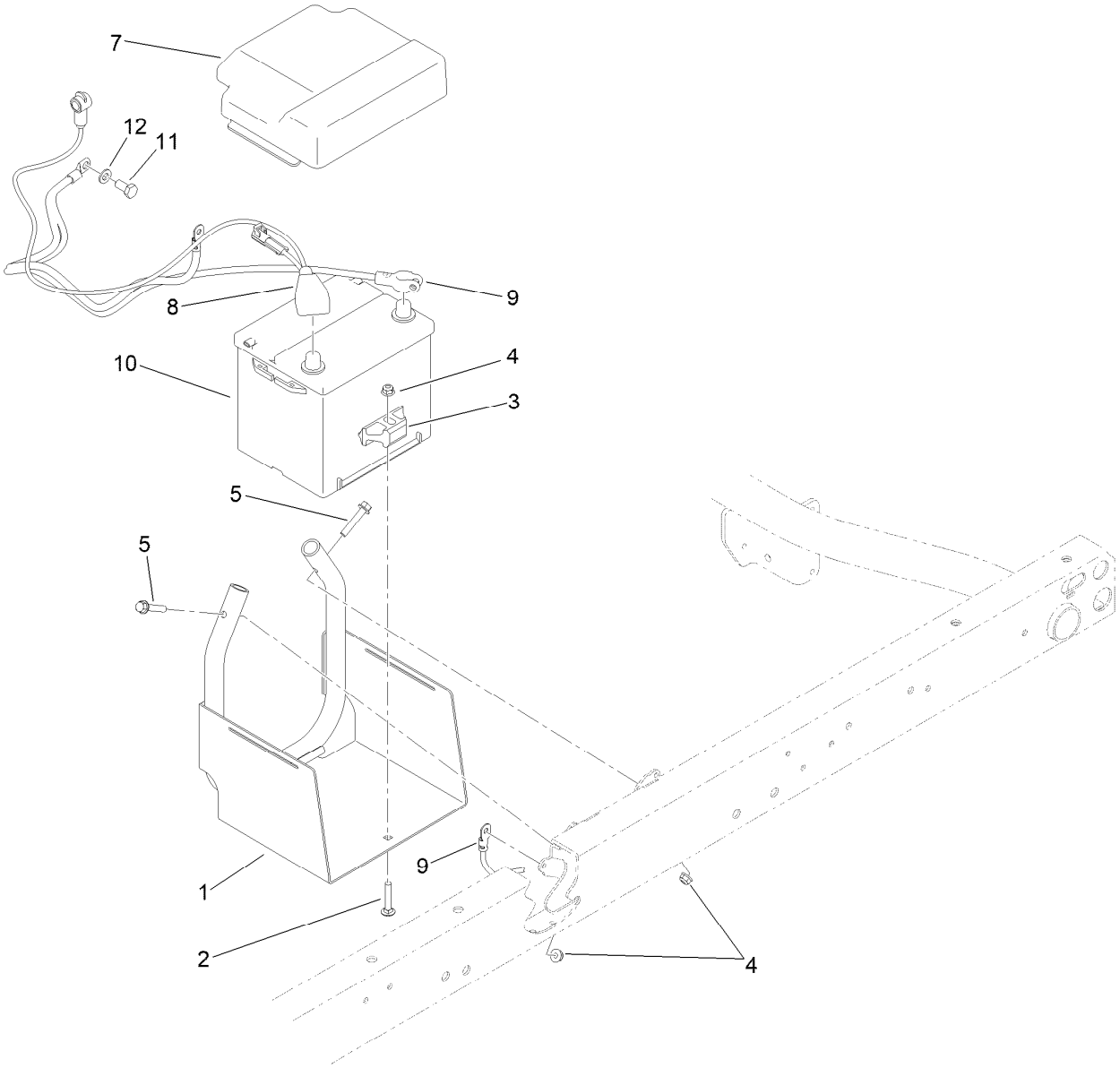

Battery Assembly

Ref.	Part Number	Qty.	Description
1	115-2237-03	1	Tray-Battery
2	3230-5	1	Bolt-CARR
3	138-6335	1	Retainer-Battery
4	104-8300	3	Nut-HF, NI
5	94-5780	2	Screw-HWH
7	119-9496	1	Cover-Battery
8	122-0204	1	Cable-Battery, Positive
9	122-1024	1	Cable-Battery, Negative
10	106-5187	1	Battery, 525 CCA W/O Electrolyte
11	63-7790	1	Screw-Cap
12	33095-00	1	Washer-Flat

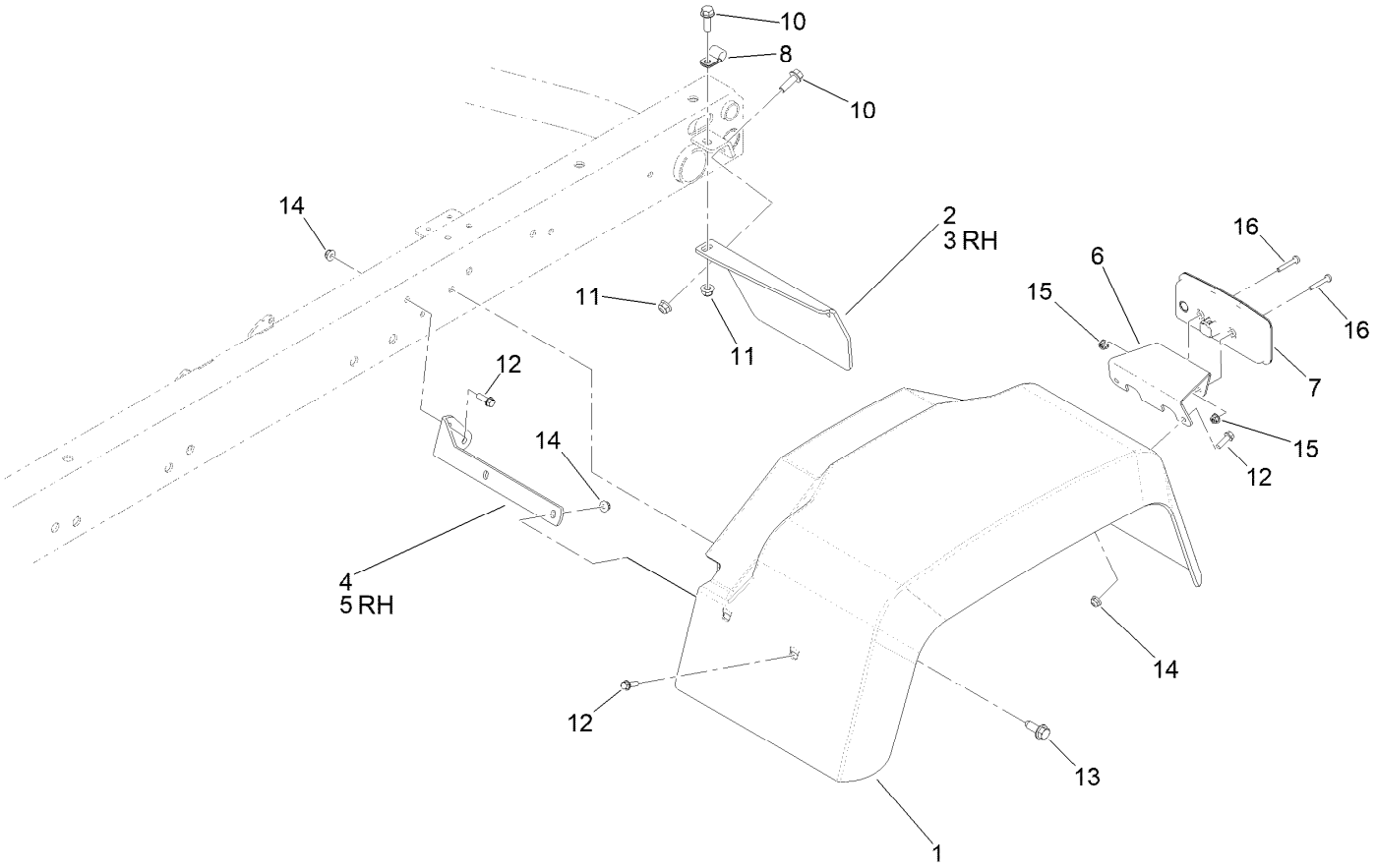

Tail Light and Fender Assembly

Ref.	Part Number	Qty.	Description
1	132-6701	2	Fender-Rear
2	93-8943-03	1	Bracket-Fender, Rear (LH)
3	93-8944-03	1	Bracket-Fender, Rear (RH)
4	93-8941-03	1	Bracket-Fender, Front (LH)
5	93-8942-03	1	Bracket-Fender, Front (RH)
6	144-2190-03	2	Bracket-Tail Light, LED
7	139-2071	2	Light-Rear Tail/Stop/Turn
8	2412-93	2	Clamp-R
10	3234-17	4	Screw-HHF
11	104-8300	4	Nut-HF, NI
12	32105-15	12	Screw-HWH
13	126-1696	6	Screw-HWHTF
14	104-7201	12	Nut-HF, NI
15	120-4578	4	Nut-HF
16	3250-52	4	Screw-PPH

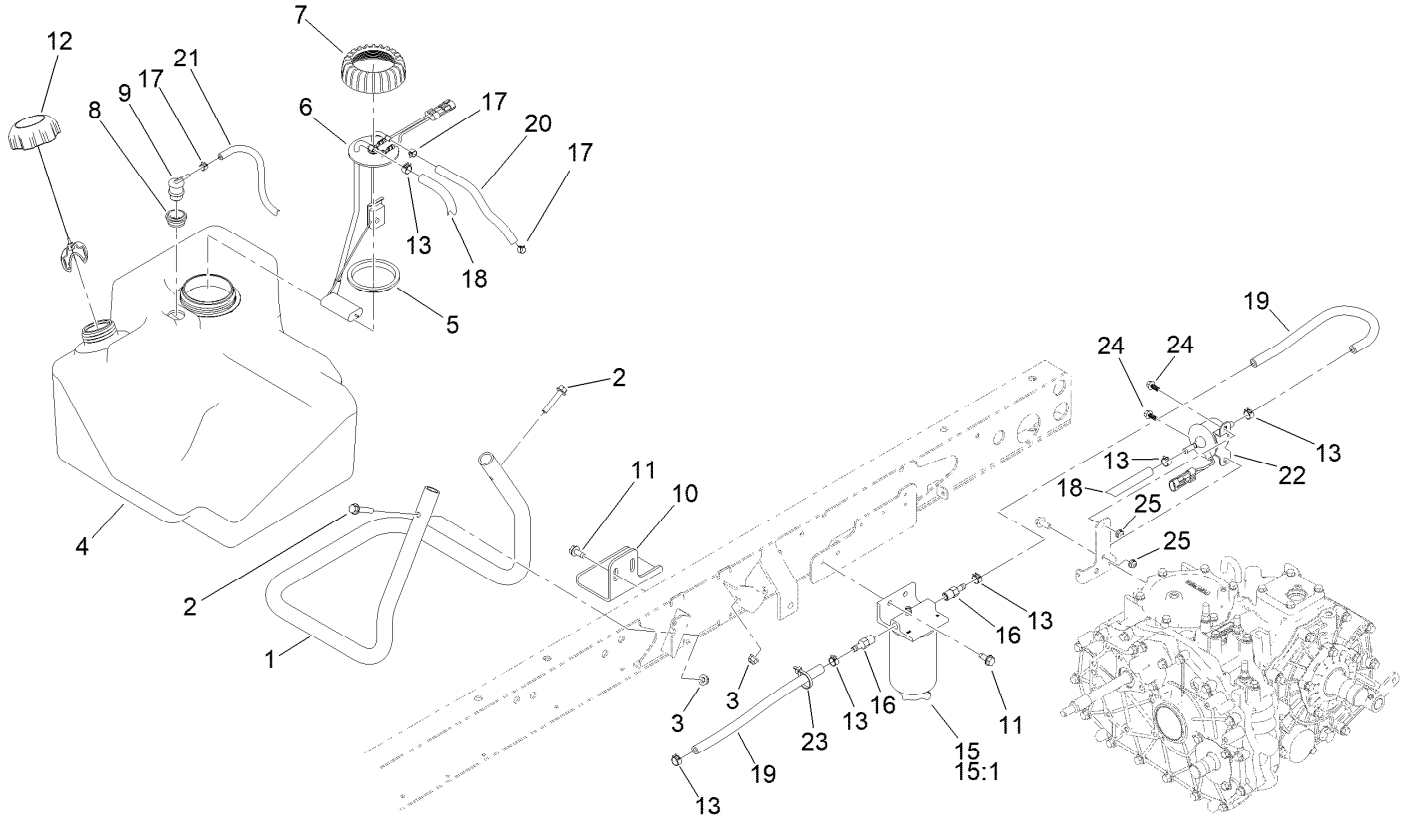

Fuel System Assembly

Ref.	Part Number	Qty.	Description
1	115-7767-0P	1	Tube-Support
2	94-5780	2	Screw-HWH
3	104-8300	2	Nut-HF, NI
4	119-0735	1	Tank-Fuel
5	115-2163	1	Gasket-Pump, Fuel
6	114-8348	1	Sender-Fuel
7	115-2162	1	Cap-Pump, Fuel
8	114-0284	1	Grommet
9	114-0285	1	Valve-Rollover
10	114-8404	1	Plate-Retainer
11	32144-70	4	Screw-HWHTF
12	115-7789	1	Cap-Fuel, Diesel
13	92-2379	6	Clamp-Hose

Ref.	Part Number	Qty.	Description
15	110-9044	1	Separator-Filter
15:1	110-9049	1	Filter-Spin On, Fuel/Water
16	353-783	2	Fitting-STR
17	2412-80	3	Clamp-Hose
18	114-8206	1	Hose-Fuel
19	110-4101	2	Hose-Fuel
20	120-5022	1	Hose-Fuel
21	110-8255	1	Hose-Fuel
22	145-3154	1	Pump-Fuel, Electric
23	3290-379	1	Tie-Cable
24	99-6810	2	Screw-HHF
25	104-7201	2	Nut-HF, NI

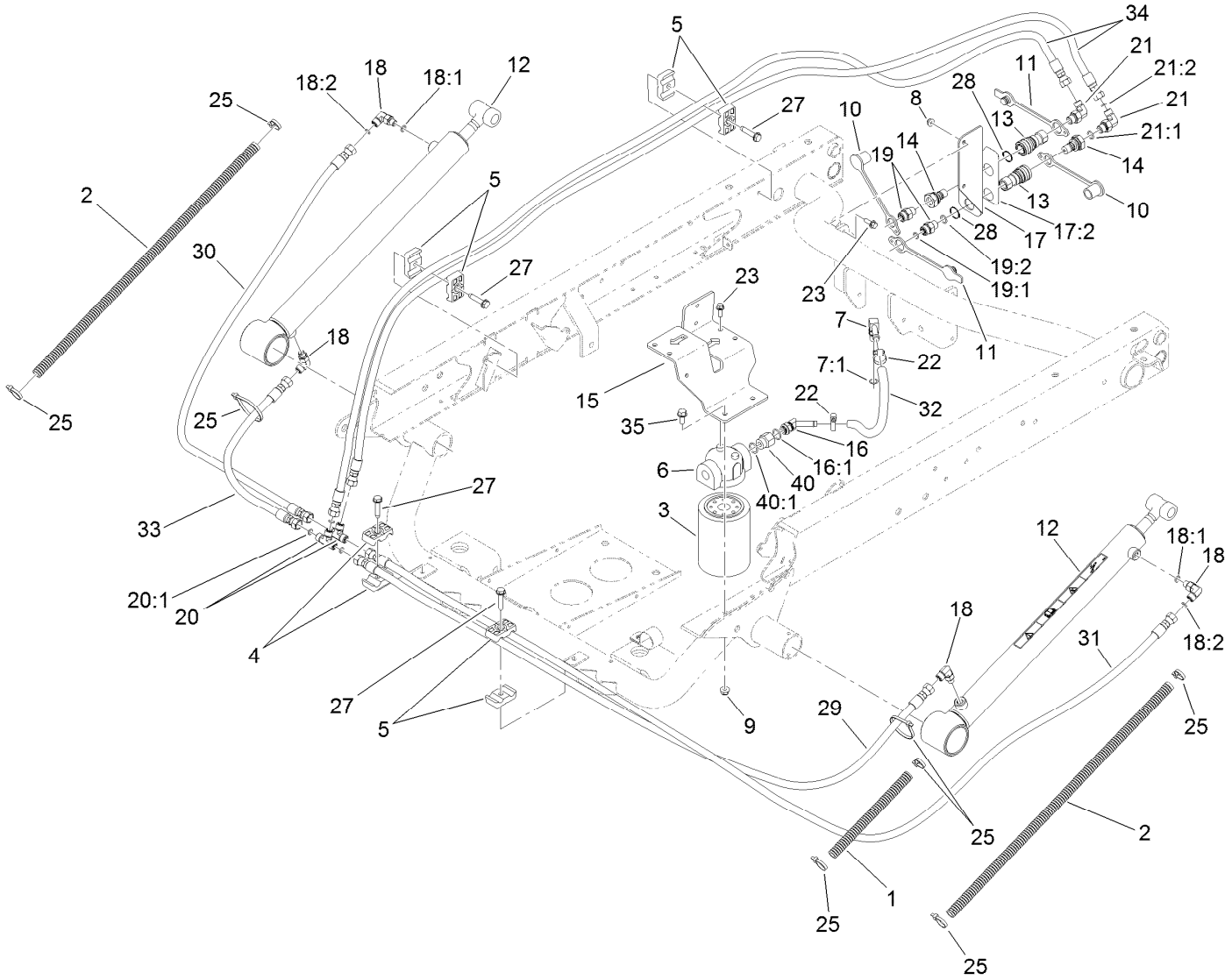

Hydraulic Lift Cylinder Assembly

Ref.	Part Number	Qty.	Description
1	24-7922	1	Conduit-Convoluted, Split
2	24-7923	2	Conduit-Convoluted, Split
3	54-0110	1	Filter-Oil, Transmission
4	56-7971	2	Clamp-Tube
5	56-7976	6	Clamp-Tube
6	87-8780	1	Head-Filter
7	100-4887	1	Fitting-Elbow, 90
7:1	237-42	1	O-Ring
8	104-7201	2	Nut-HF, NI
9	104-8300	2	Nut-HF, NI
10	106-7881	2	Cap-Dust, HYD
11	106-7882	2	Plug-Dust, HYD
12	133-0620	2	HYD Cylinder ASM
13	106-7968	2	Coupler-Quick, Female
14	106-7969	2	Coupler-Quick, Male
15	115-2168-0P	1	Bracket-Mount-Filter
16	103-1807	1	Fitting-Barbed, 45 DEG
16:1	237-42	1	O-Ring
17	139-4530	1	Coupler Bracket ASM
17:2	115-7723	1	Decal-Disconnect, Quick
18	340-132	4	Fitting-Elbow, 90 DEG

Ref.	Part Number	Qty.	Description
18:1	237-78	1	O-Ring
18:2	237-21	1	O-Ring
19	340-2	2	Fitting-Straight
19:1	237-22	1	O-Ring
19:2	237-42	1	O-Ring
20	340-21	2	Fitting
20:1	237-21	3	O-Ring
21	340-82	2	Fitting-Elbow, 90 DEG
21:1	237-42	1	O-Ring
21:2	237-21	1	O-Ring
22	2412-36	2	Clamp-Hose
23	3234-4	4	Screw-HHF
25	3290-379	6	Tie-Cable
27	32144-57	4	Screw
28	32151-83	2	Ring-Snap
29	115-7711	1	Hose-HYD
30	108-6508	1	Hose-HYD
31	104-3716	1	Hose-HYD
32	115-2228	1	Hose-HYD
33	110-0931	1	Hose-HYD
34	106-3680	2	Hose-HYD

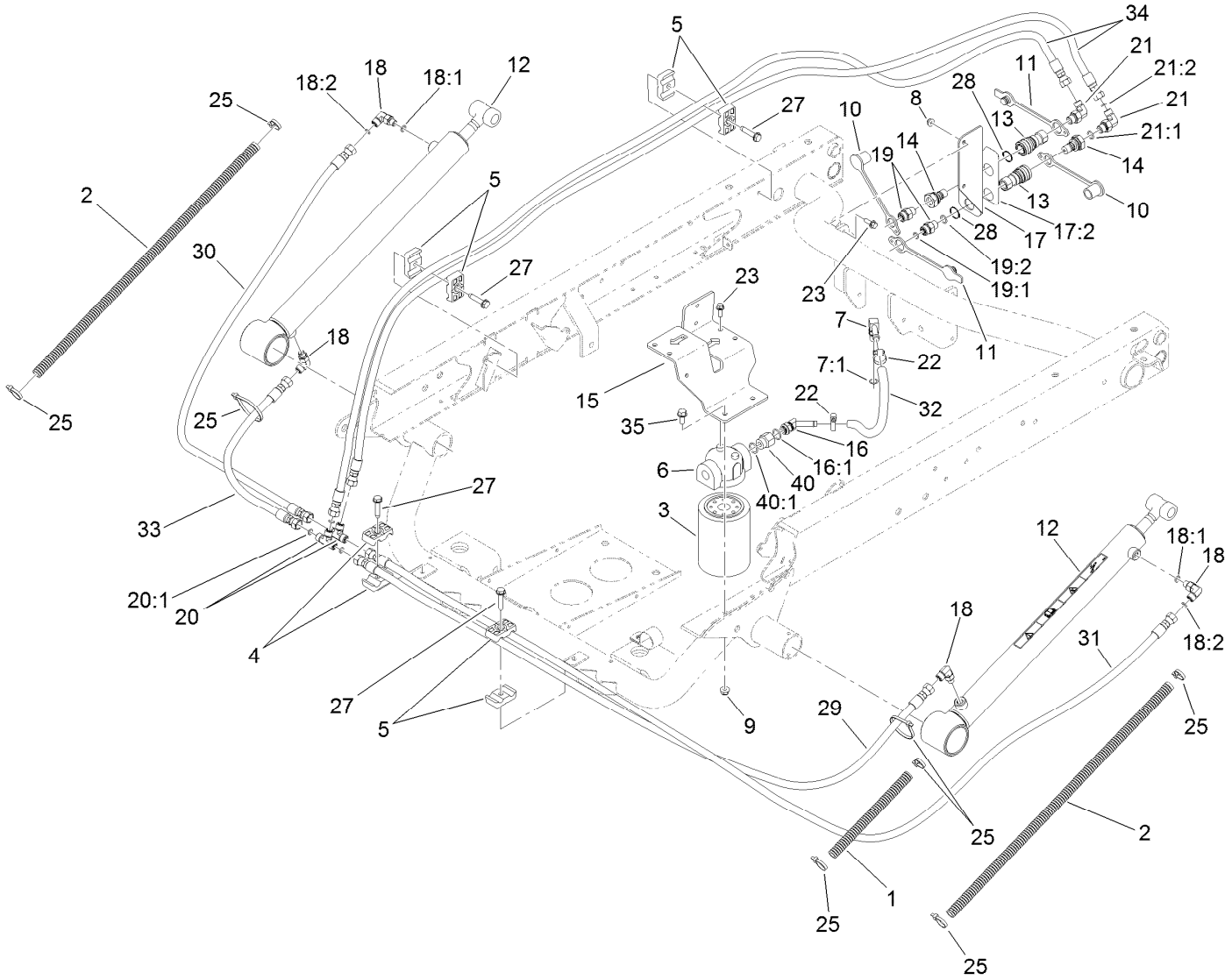

Hydraulic Lift Cylinder Assembly (continued)

Ref.	Part Number	Qty.	Description
35	3234-5	2	Screw-HHF

Ref.	Part Number	Qty.	Description
40	353-397	1	Reducer-Adapter
40:1	237-79	1	O-Ring

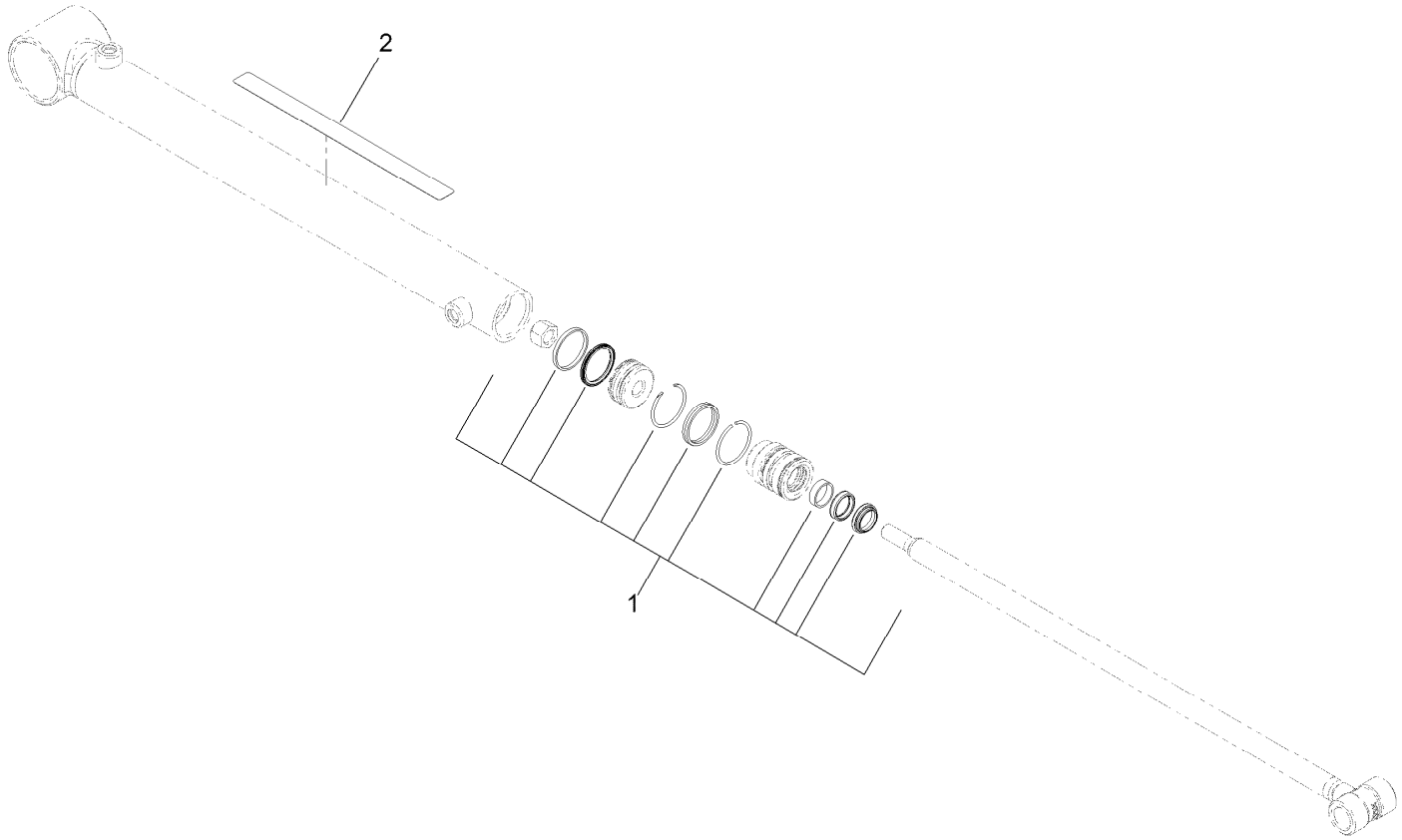

Hydraulic Cylinder Assembly No. 133-0620

Ref.	*Part Number*	*Qty.*	*Description*
1	133-0618	1	Cylinder Seal Kit
2	93-9852	1	Decal-Warning

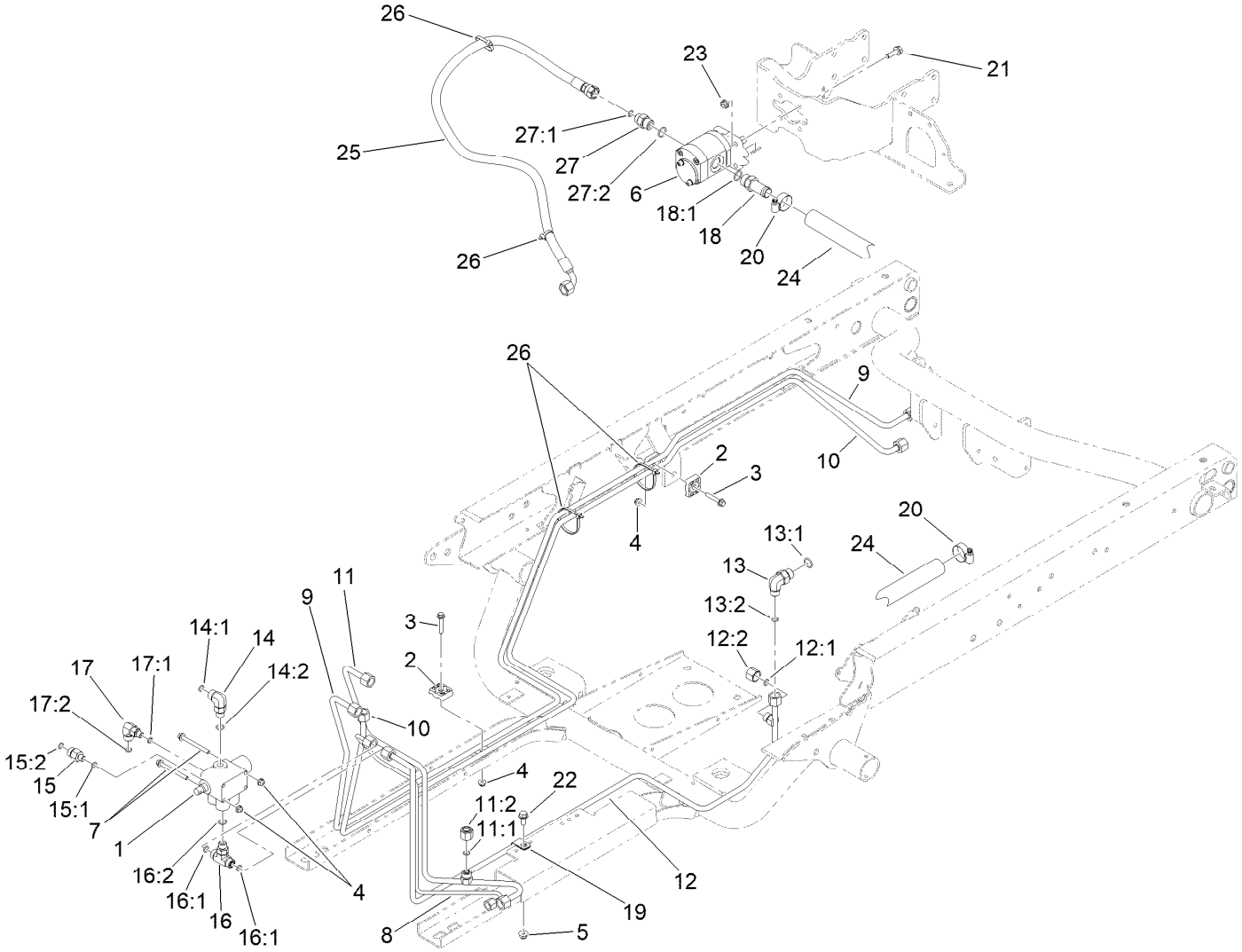

Main Hydraulic Pump and Lift Valve Assembly

Ref.	Part Number	Qty.	Description
1	43-1950	1	HYD Control Valve ASM
2	56-7973	4	Clamp-Tube
3	94-5781	2	Screw-HHF
4	104-7201	4	Nut-HF, NI
5	104-8300	1	Nut-HF, NI
6	114-8302	1	HYD Pump ASM
7	114-8410	2	Screw-HHF
8	127-8605	1	Tube-HYD
9	115-2217	1	Tube-HYD
10	115-2218	1	Tube-HYD
11	127-8604	1	Tube-HYD
11:1	237-22	1	O-Ring
11:2	340-117	1	Cap
12	127-8752	1	Tube-HYD
12:1	237-22	1	O-Ring
12:2	340-117	1	Cap
13	340-18	1	Fitting-HYD, 90 DEG
13:1	237-79	1	O-Ring
13:2	237-22	1	O-Ring
14	340-77	1	Fitting-Elbow, 90 DEG
14:1	237-22	1	O-Ring

Ref.	Part Number	Qty.	Description
14:2	237-42	1	O-Ring
15	340-88	1	Fitting-Straight
15:1	237-22	1	O-Ring
15:2	237-78	1	O-Ring
16	340-94	1	Adapter
16:1	237-22	2	O-Ring
16:2	237-42	1	O-Ring
17	340-97	1	Fitting-Elbow, 90 DEG
17:1	237-22	1	O-Ring
17:2	237-78	1	O-Ring
18	354-136	1	Fitting-STR
18:1	237-80	1	O-Ring
19	2412-113	1	Clamp-R
20	2412-129	2	Clamp-Hose
21	3234-17	4	Screw-HHF
22	3234-5	1	Screw-HHF
23	32128-20	4	Nut-HF
24	87-3670	1	Hose-Suction
25	145-2295	1	Hydraulic Hose ASM
26	3290-379	4	Tie-Cable
27	340-3	1	Fitting-Straight

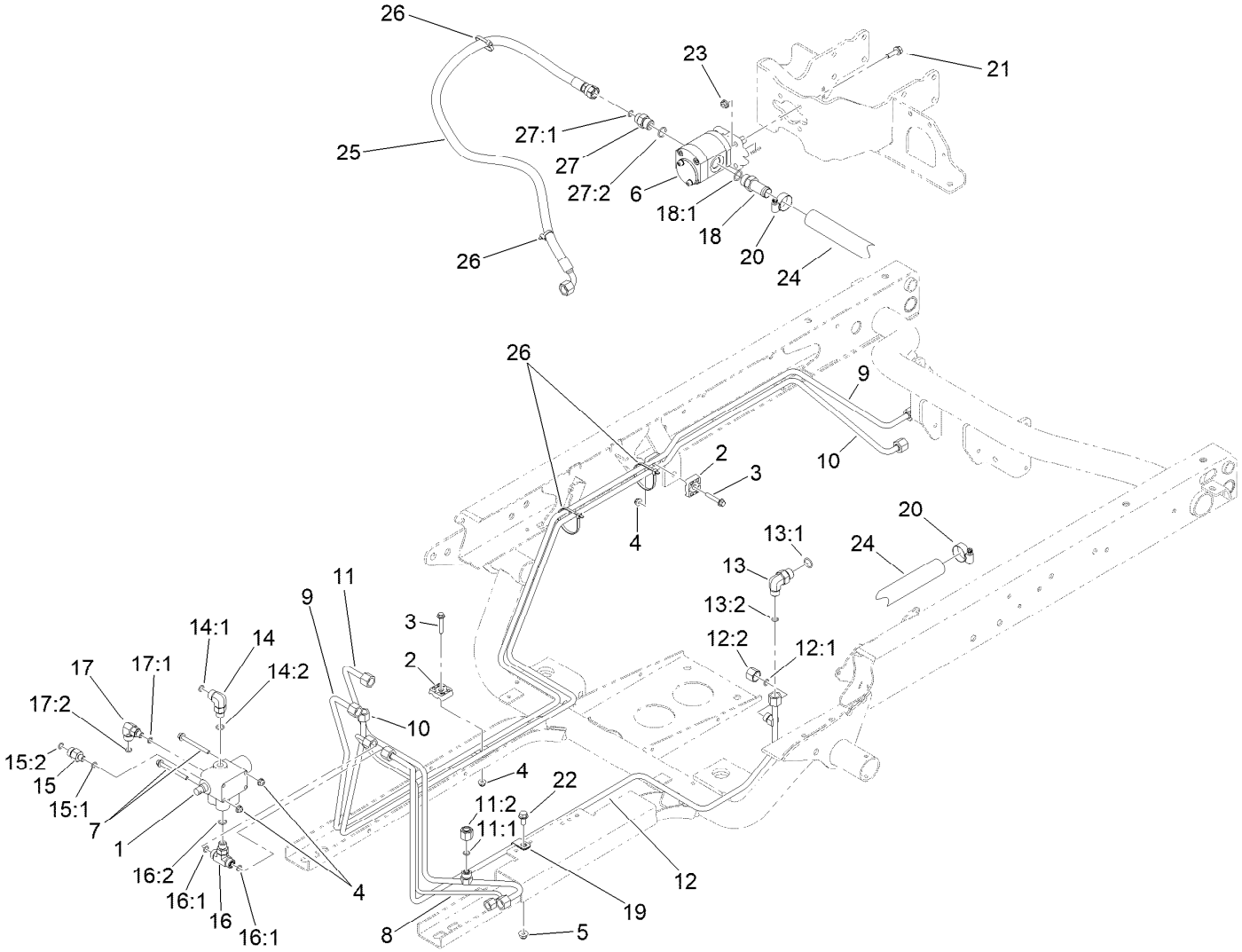

Main Hydraulic Pump and Lift Valve Assembly (continued)

Ref.	*Part Number*	*Qty.*	*Description*
27:1	237-22	1	O-Ring
27:2	237-79	1	O-Ring

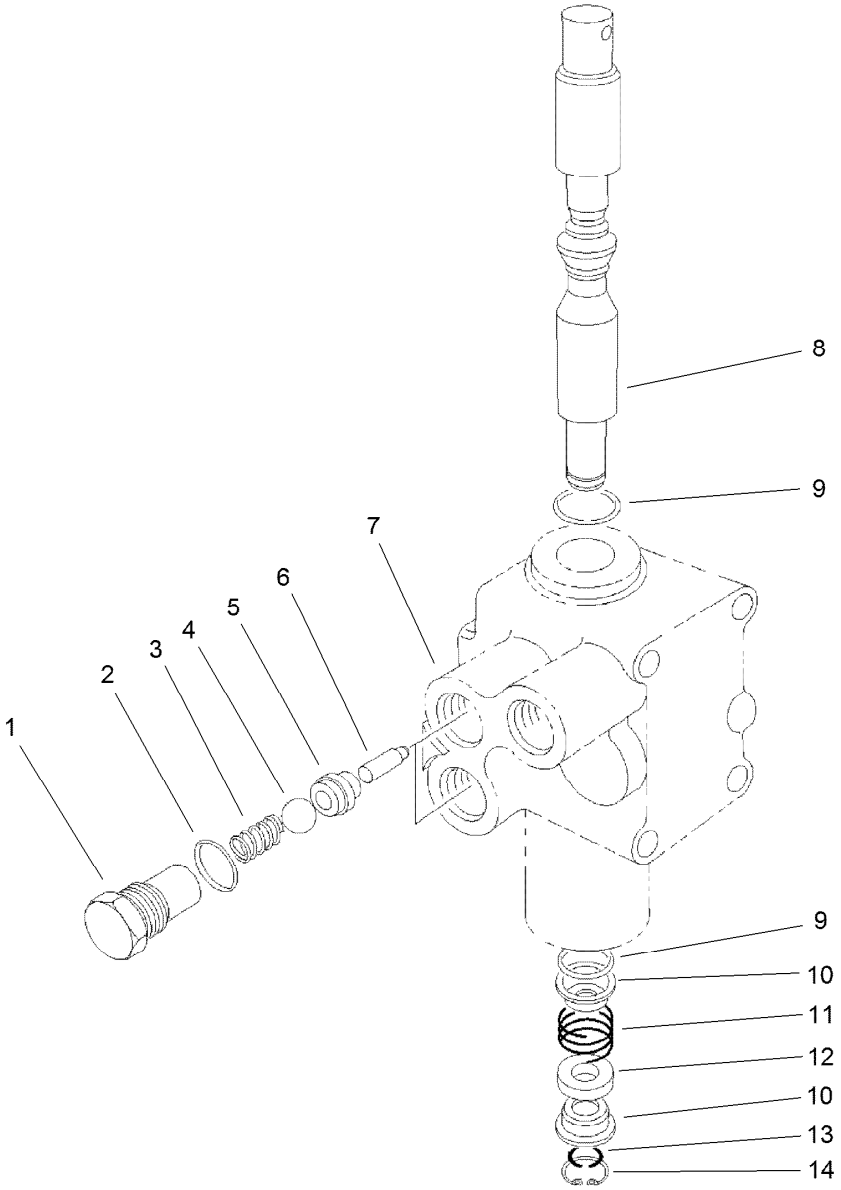

Control Valve Assembly No. 43-1950

Ref.	Part Number	Qty.	Description
1	22-8330	2	Plug
2	237-42	2	O-Ring
3	22-8340	2	Spring
4	22-8350	2	Ball
5	22-8370	2	Seat-Valve
6	22-8360	2	Pin
7		1	Body ●
8	22-8420	1	Spool
9	22-8500	2	O-Ring
10	22-8380	2	Retainer
11	22-8410	1	Spring
12	23-3030	1	Spacer
13	22-8480	1	Ring-Snap
14	22-8490	1	Ring-Snap

● Not serviced separately

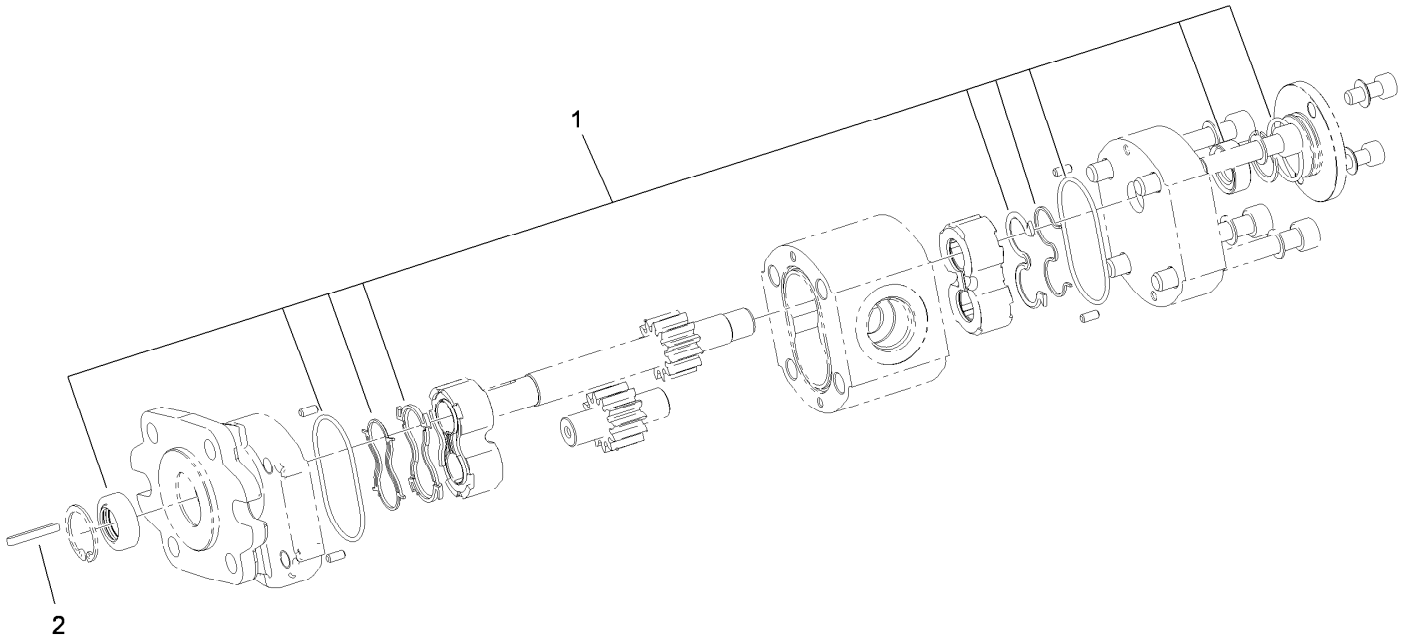

Hydraulic Gear Pump Assembly No. 114-8302

Ref.	*Part Number*	*Qty.*	*Description*
1	115-8696	1	Seal Kit
2	115-7855	1	Key-Square

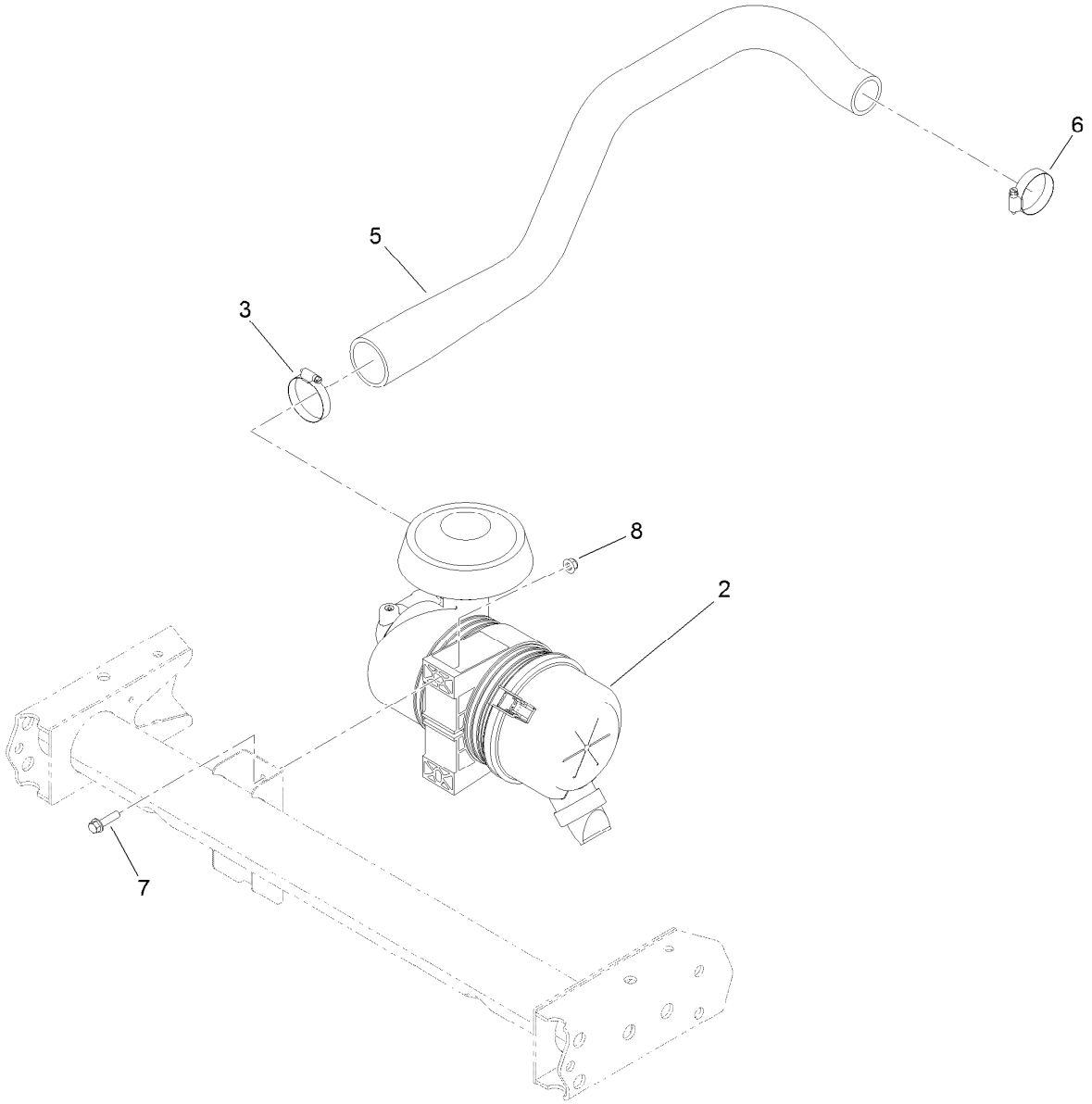

Air Cleaner Assembly

Ref.	Part Number	Qty.	Description
2	138-5650	1	Air Cleaner ASM
3	2412-130	1	Clamp-Hose
5	120-5097	1	Hose-Intake, Air (Diesel)
6	2412-3	1	Clamp-Hose
7	3234-29	2	Screw-HHF
8	104-8300	2	Nut-HF, NI

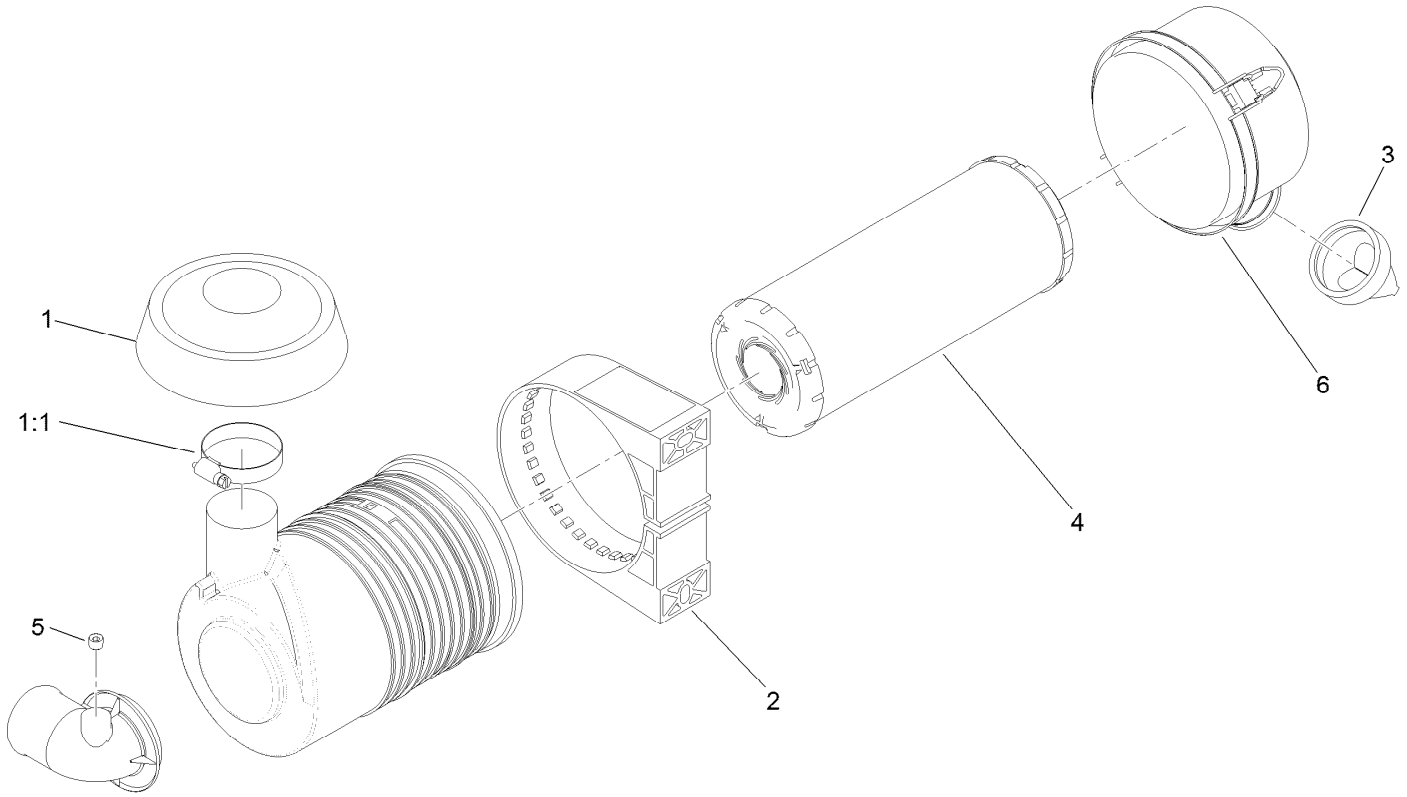

Air Cleaner Assembly No. 138-5650

Ref.	*Part Number*	*Qty.*	*Description*
1	139-0686	1	Rain Cap ASM
1:1	2412-130	1	Clamp-Hose
2	98-4525	1	Bracket-Cleaner, Air
3	87-9400	1	Valve-Vacuator
4	108-3810	1	Filter-Air
5	285-17	1	Plug-Pipe
6	98-9771	1	Cover ASM

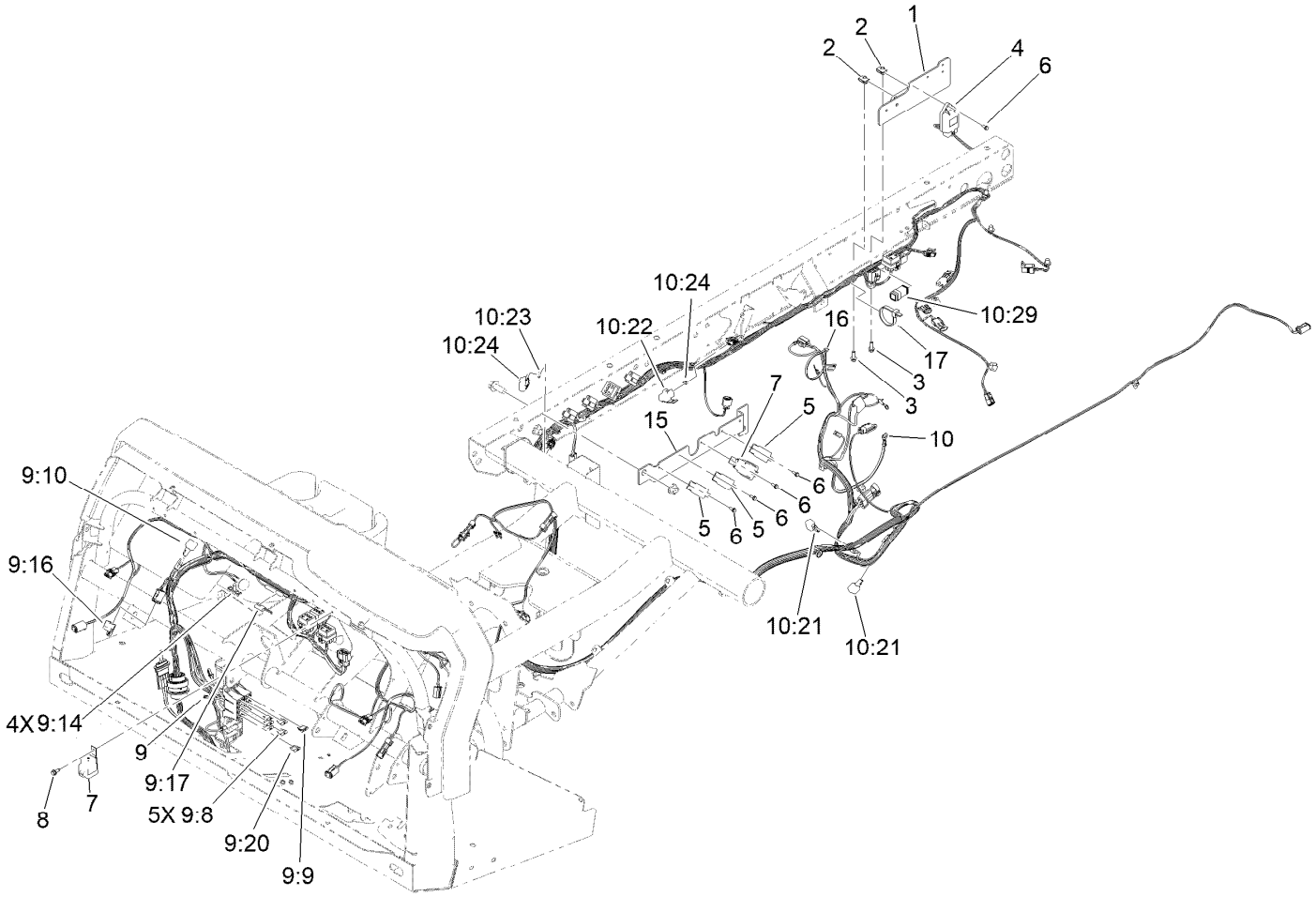

Front and Rear Wire Harness Assembly

Ref.	Part Number	Qty.	Description
1	132-6714-0P	1	Bracket-Mount, Filter
2	107069	2	Clip
3	3234-4	2	Screw-HHF
4	98-7611	1	Controller-Glow
5	99-7435	3	Relay
6	32144-112	5	Screw-HWH
7	99-7430	2	Relay-Mini
8	32144-10	1	Screw-HWH
9	122-2359	1	Harness-Wire, HDX, Diesel, Front
9:8	218-578	5	Fuse-Blade, 10 Amp
9:9	109355	1	Fuse-Blade, 15 Amp
9:10	100-4918	1	Diode
9:14	32180-012	4	Clip-Harness
9:16	32180-156	1	Cap-Plug, 6 Way
9:17	32180-416	1	Cap-Tethered
9:20	109101	1	Fuse-Blade, 20 Amp
10	122-2360	1	Harness-Wire, HDX, Diesel, Rear
10:21	100-4918	2	Diode
10:22	121-8867	1	Fuse-Mini Blade, 15 Amp
10:23	121-8870	1	Fuse-Mini Blade, 30 Amp
10:24	32180-101	2	Cover-Fuse, Single
10:29	122-1131	1	Capacitor-Sealed
15	132-6713-0P	1	Bracket-Mount, Relay
16	3290-379	1	Tie-Cable
17	3290-378	1	Tie-Cable

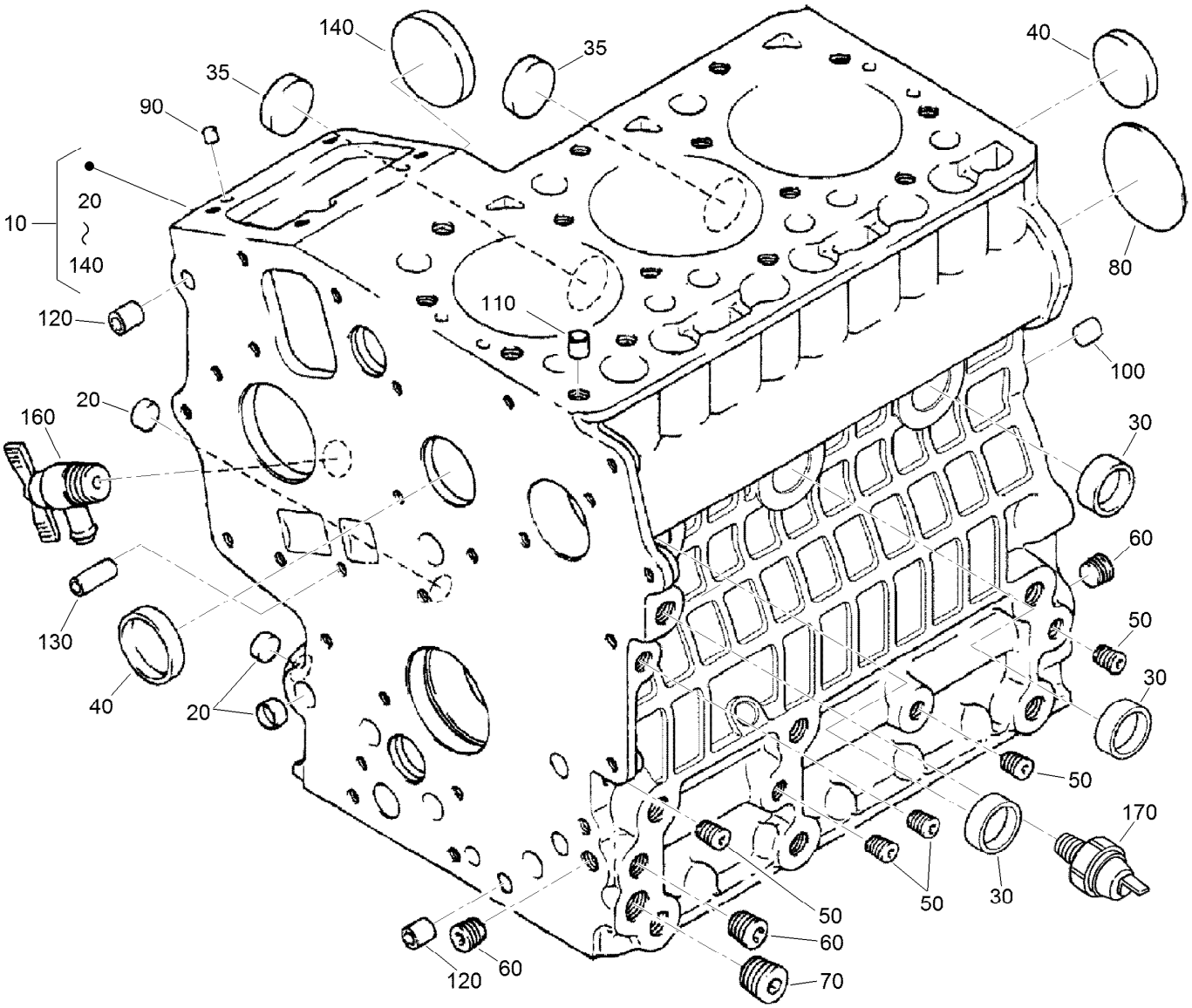

Crankcase Assembly

Ref.	Part Number	Qty.	Description
10	120-3120	1	Crankcase ASM
20	100-2019	3	Cap-Sealing
30	100-2020	3	Cap-Sealing
35	110-3702	2	Cap-Sealing
40	98-9398	2	Cap-Sealing
50	98-9687	5	Plug
60	98-7487	3	Plug
70	98-7488	1	Plug
80	100-1851	1	Plug-Expansion

Ref.	Part Number	Qty.	Description
90	98-9375	2	Pin-Straight
100	98-9377	2	Pin-Straight
110	98-7506	1	Pin-Pipe
120	100-2051	2	Pin-Pipe
130	100-2051	2	Pin-Pipe
140	100-1991	1	Cover-Fuel, Camshaft
160	120-3121	1	Draincock ASM
170	98-9416	1	Switch-Oil

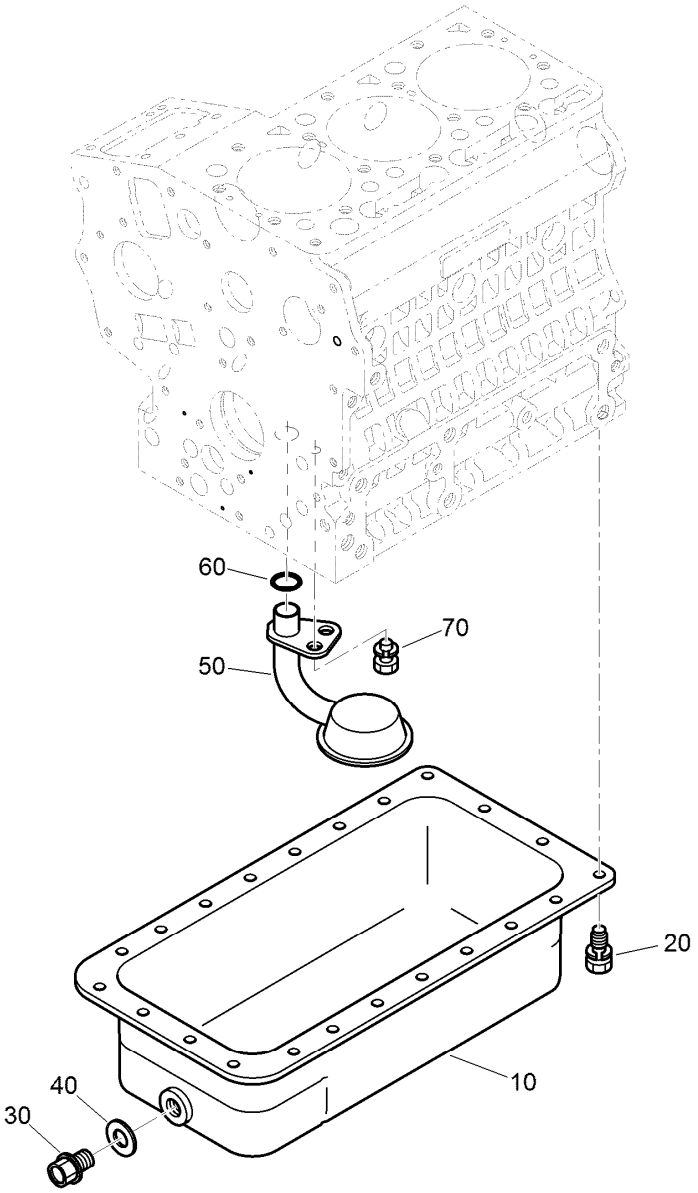

Oil Pan Assembly

Ref.	Part Number	Qty.	Description
10	125-9056	1	Oil Pan ASM
20	98-9350	22	Bolt
30	114-8151	1	Plug-Drain
40	98-7524	1	Gasket
50	125-9052	1	Tube-Pick Up, Oil
60	105-3776	1	O-Ring
70	100-9195	1	Bolt

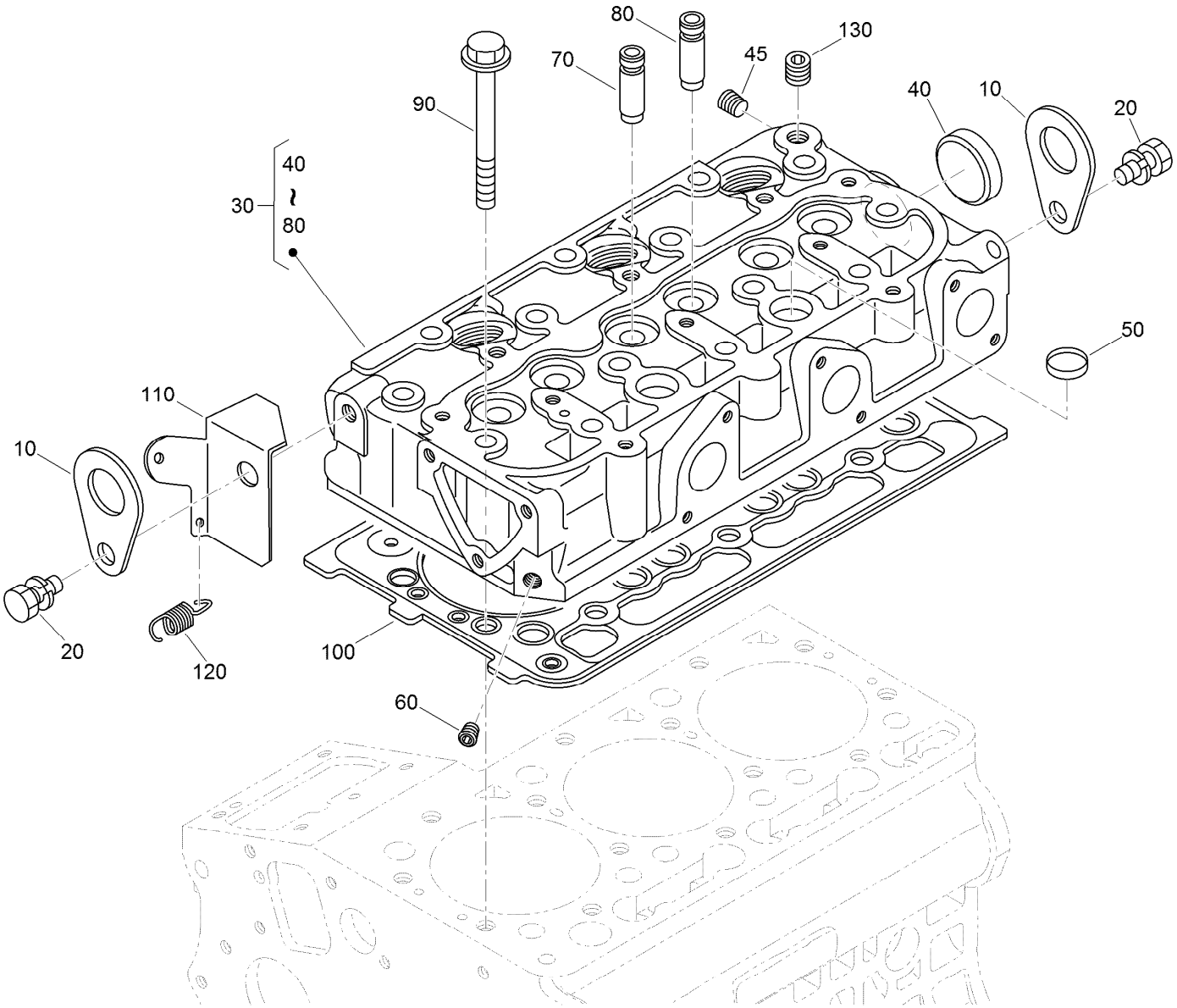

Cylinder Head Assembly

Ref.	Part Number	Qty.	Description
10	98-7531	2	Hook-Engine
20	98-7526	2	Bolt
30	130-1533	1	Cylinder Head ASM
40	105-3705	1	Cap-Sealing
45	125-9062	1	Plug
50	98-9389	2	Cap-Sealing
60	98-9687	1	Plug
70	100-1882	3	Guide-Valve, Inlet
80	100-1883	3	Guide-Valve, Exhaust
90	100-1820	14	Bolt-Head, Cylinder
100	112-2520	1	Gasket-Head, Cylinder
110	121-3810	1	Stay
120	121-3820	1	Spring-Return
130	98-9444	1	Plug

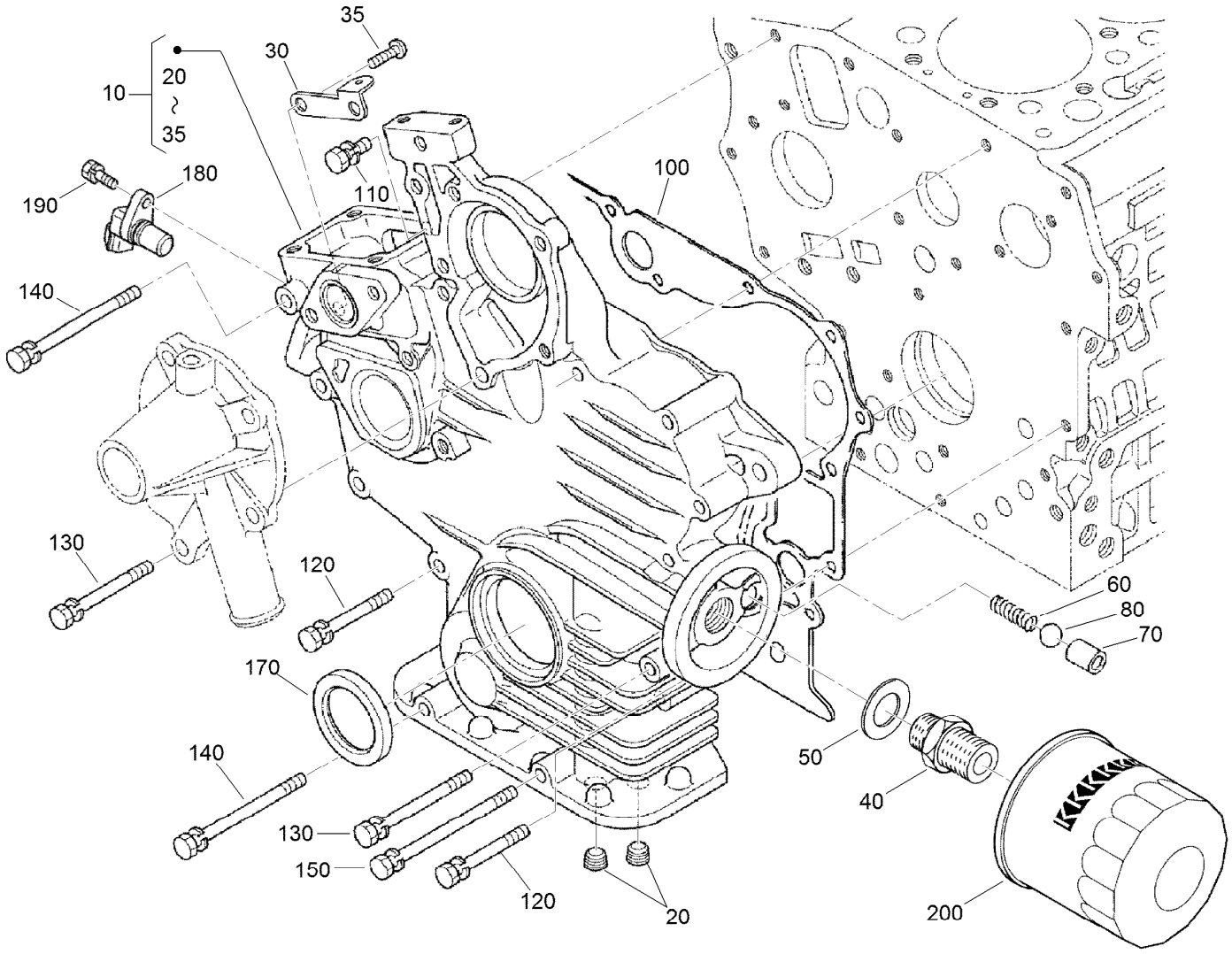

Gear Case and Oil Filter Cartridge Assembly

Ref.	Part Number	Qty.	Description
10	125-9057	1	Gear Case ASM
20	98-7488	2	Plug
30	110-3708	1	Stay-Spring, Start
35	100-2040	2	Screw
40	98-9388	1	Joint-Pipe
50	100-1926	1	Washer-Plain
60	100-2004	1	Spring
70	100-1894	1	Seat-Valve
80	100-1792	1	Ball
100	117-0327	1	Gasket-Case, Gear

Ref.	Part Number	Qty.	Description
110	127-0403	1	Bolt-Flange
120	125-9063	9	Bolt-Sems
130	100-1922	2	Bolt
140	98-9357	2	Bolt
150	110-3710	1	Bolt
170	120-7852	1	Seal-Oil
180	125-9058	1	Sensor-Revolution
190	98-7692	1	Bolt
200	115-8189	1	Filter-Oil, Engine

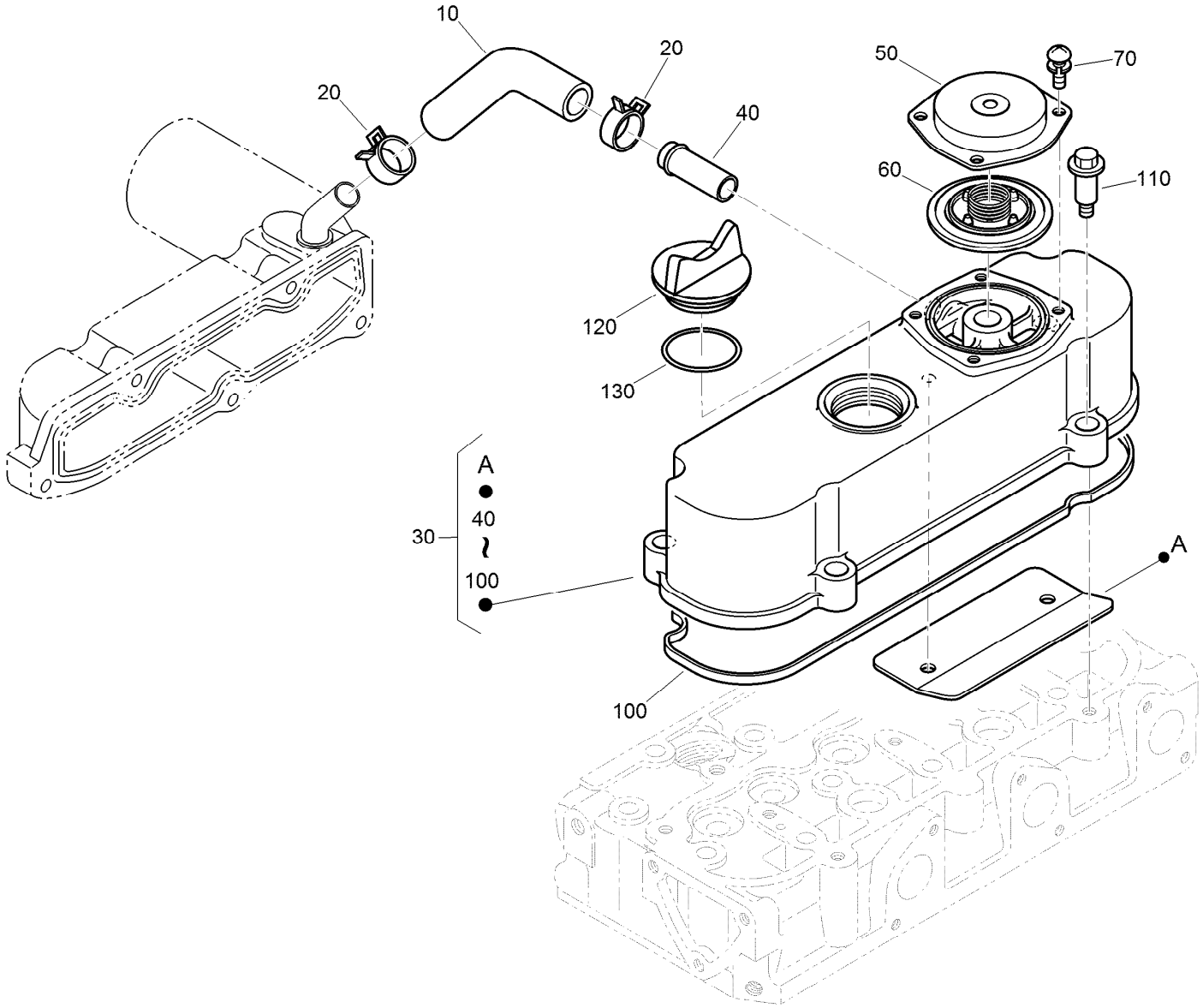

Cylinder Head Cover Assembly

Ref.	Part Number	Qty.	Description
10	120-3139	1	Tube-Breather
20	110-3712	2	Clamp-Hose
30	112-8332	1	Cylinder Head Cover ASM
40	98-9580	1	Pipe-Return, Water
50	110-3714	1	Cover-Breather
60	110-3715	1	Valve-Breather
70	98-9364	4	Screw (With Washer)
100	112-2521	1	Gasket-Cover, Head
110	108-7063	4	Bolt
120	107-9075	1	Plug-Filler, Oil
130	99-3446	1	O-Ring

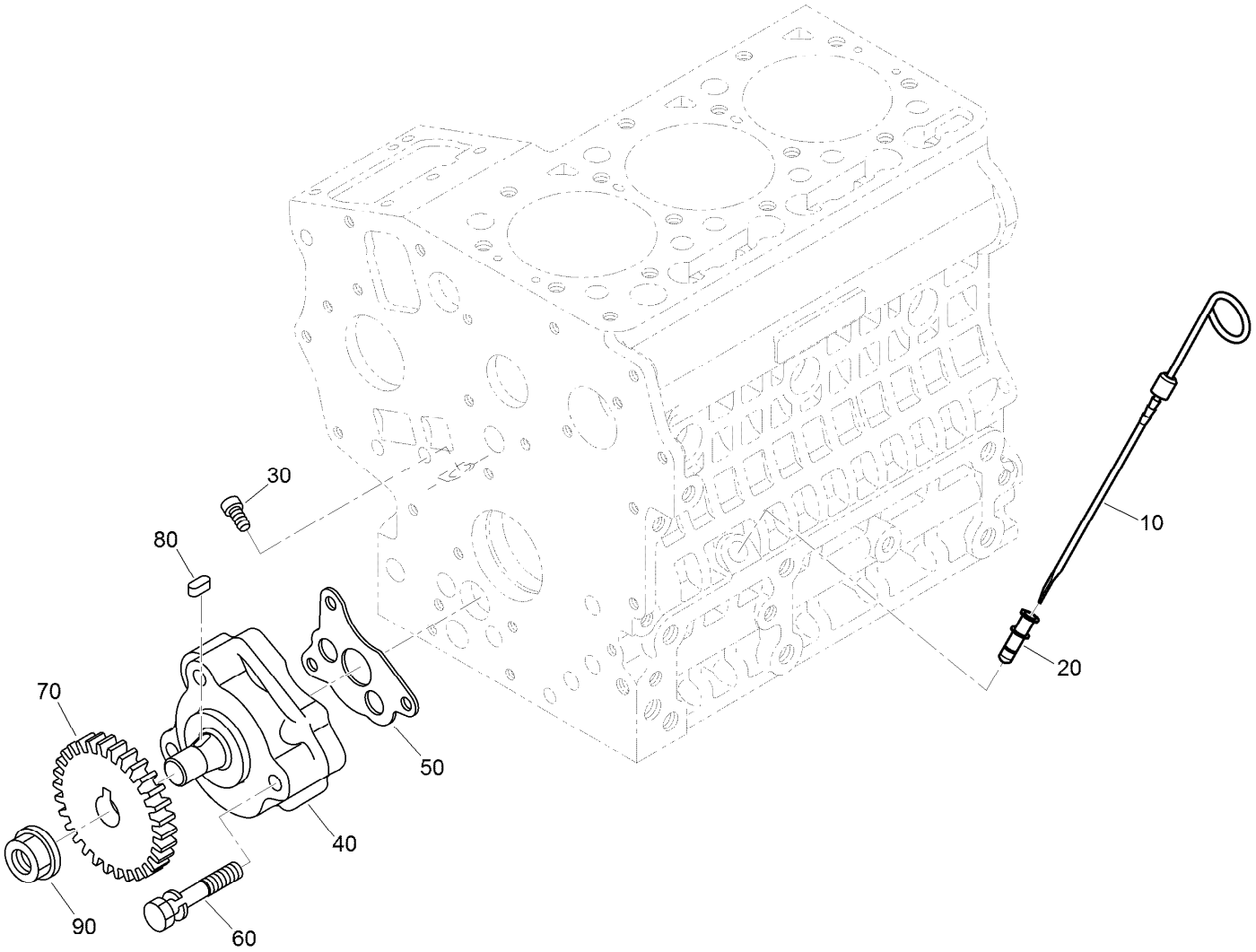

Oil Pump and Dipstick Assembly

Ref.	*Part Number*	*Qty.*	*Description*
10	110-3719	1	Gauge-Oil
20	105-4580	1	Guide-Gauge, Oil
30	110-3720	1	Plug-Gauge, Oil
40	100-2002	1	Oil Pump ASM
50	100-2003	1	Gasket-Pump, Oil
60	100-1923	3	Bolt
70	130-1419	1	Gear-Drive, Oil Pump
80	98-7658	1	Key-Feather
90	100-1779	1	Nut-Flange

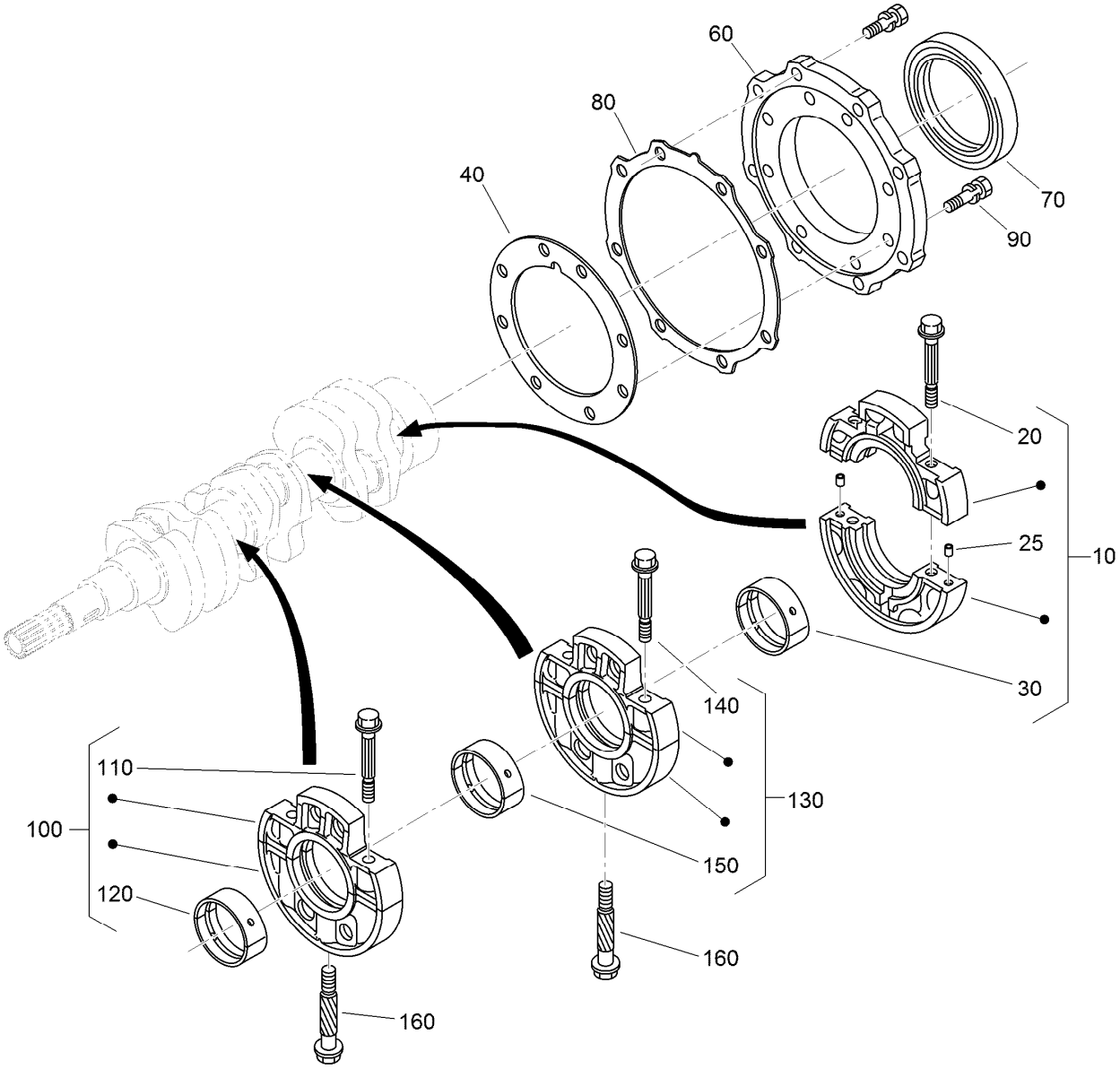

Main Bearing Case Assembly

Ref.	Part Number	Qty.	Description
10	125-9064	1	Wheel Bearing Case ASM
20	125-9065	2	Bolt-Flange
25	125-9082	2	Pin-Straight
30	125-9066	1	Crankshaft Metal ASM (STD)
30	125-9067	1	Crankshaft Metal ASM (-0.20Mm)
30	125-9068	1	Crankshaft Metal ASM (-0.40Mm)
40	117-0304	1	Gasket-Case, Bearing
60	112-8334	1	Cover-Case, Bearing
70	110-3724	1	Seal-Oil
80	100-1876	1	Gasket-Cover, Case
90	100-1750	16	Bolt
100	110-3725	1	Main Bearing Case ASM
110	110-3723	2	Bolt-Case, Bearing

Ref.	Part Number	Qty.	Description
120	110-3741	1	Crankshaft Metal ASM (STD)
120	125-9083	1	Crankshaft Metal ASM (-0.20Mm)
120	110-3743	1	Crankshaft Metal ASM (-0.40Mm)
130	125-9069	1	Main Case Bearing ASM
140	110-3723	2	Bolt-Case, Bearing
150	110-3741	1	Crankshaft Metal ASM (STD)
150	125-9083	1	Crankshaft Metal ASM (-0.20Mm)
150	110-3743	1	Crankshaft Metal ASM (-0.40Mm)
160	100-1874	2	Bolt-Case, Bearing

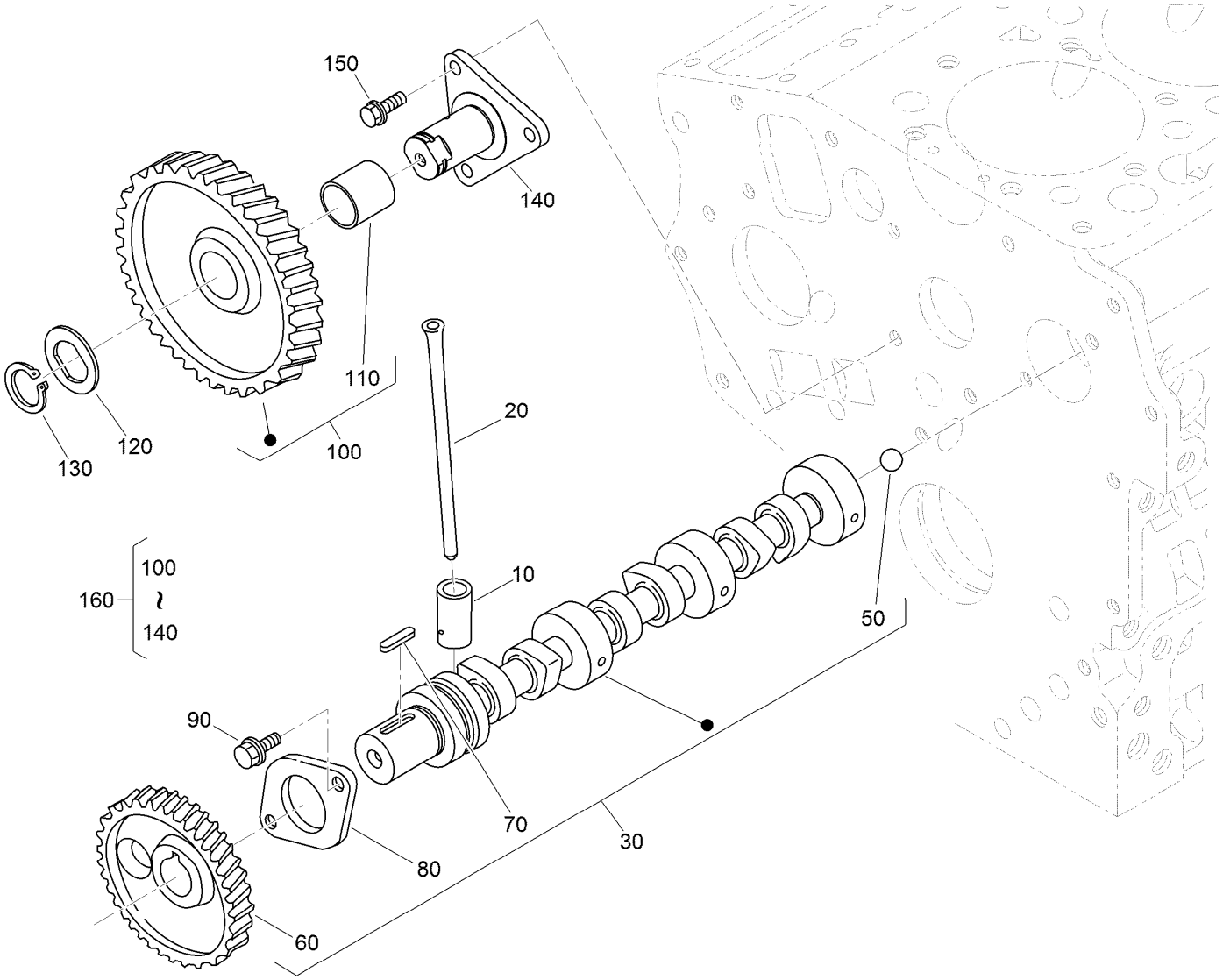

Camshaft and Idle Gear Shaft Assembly

Ref.	Part Number	Qty.	Description
10	110-3727	6	Tappet
20	100-1989	6	Rod-Push
30	117-0305	1	Camshaft ASM
50	110-3729	1	Ball
60	130-1534	1	Gear-Cam
70	98-9378	1	Key-Feather
80	100-1887	1	Stopper-Camshaft
90	98-9350	2	Bolt
100	121-2421	1	Idle Gear ASM
110	121-2422	1	Bushing
120	100-1970	1	Collar-Gear, Idle
130	100-1969	1	Ring-Snap
140	100-1967	1	Shaft-Gear, Idle
150	100-1774	3	Bolt-Flange
160	100-2240	1	Idle Gear ASM

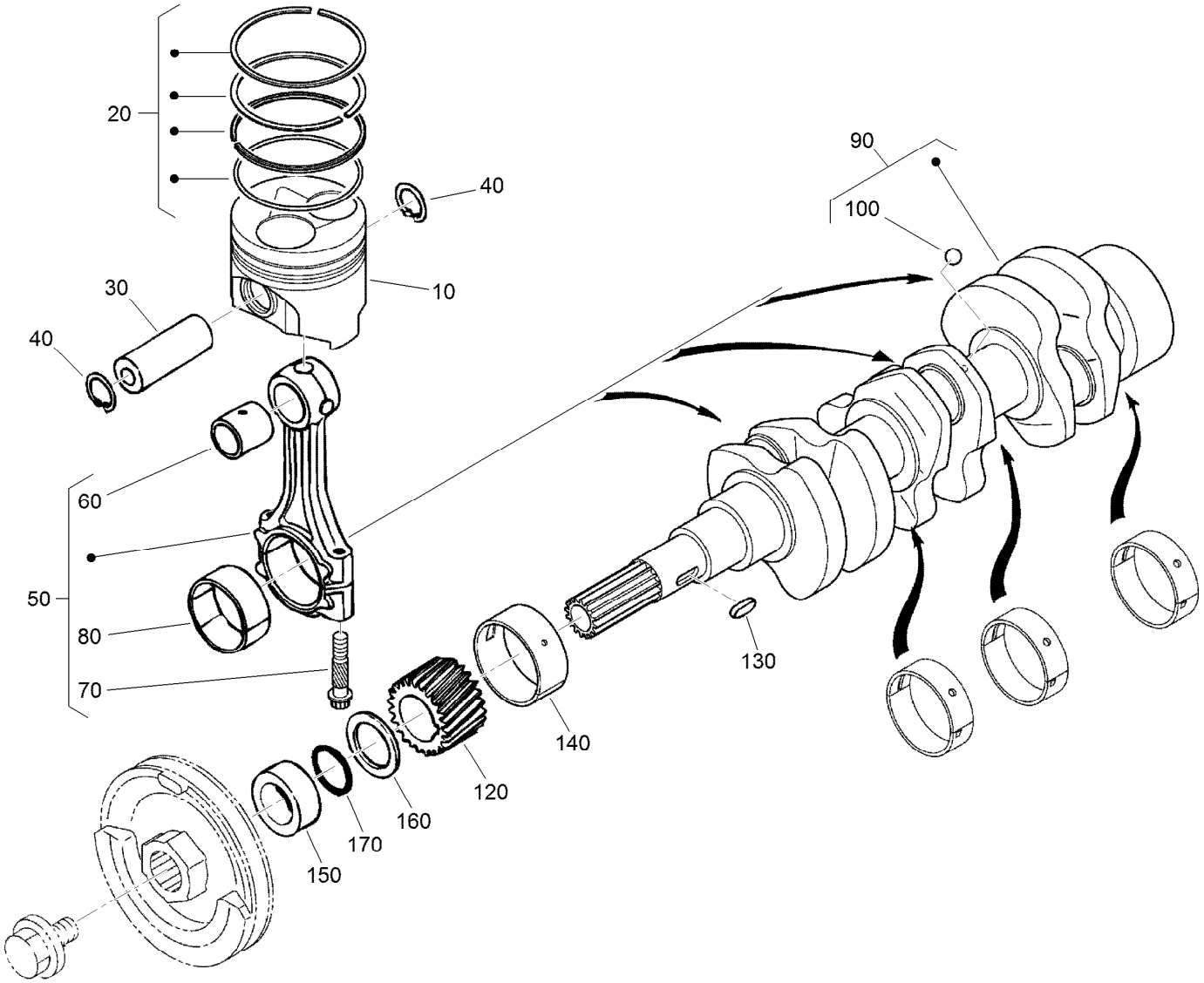

Piston and Crankshaft Assembly

Ref.	Part Number	Qty.	Description
10	130-1537	3	Piston
10	130-1540	3	Piston
20	130-1535	3	Piston Ring ASM
20	130-1536	3	Piston Ring ASM
30	110-3734	3	Pin-Piston
40	100-1835	6	Circlip-Internal
50	125-9070	3	Connecting Rod ASM
60	110-3736	3	Bushing-Pin, Piston
70	100-1999	6	Bolt-Rod, Connecting
80	100-2000	6	Metal-Crankpin (STD)
80	121-3849	3	Metal-Crankpin (-.20MM)

Ref.	Part Number	Qty.	Description
80	121-2420	3	Metal-Crankpin (-.40MM)
90	117-0308	1	Crankshaft
100	100-1791	3	Ball
120	100-1891	1	Gear-Crankshaft
130	100-1752	1	Key-Feather
140	110-3738	1	Metal-Crankshaft (STD)
140	121-2424	1	Metal-Crankshaft (-.20MM)
140	121-2425	1	Metal-Crankshaft (-.40MM)
150	100-1890	1	Collar-Crankshaft
160	100-1974	1	Slinger-Oil
170	100-2209	1	O-Ring

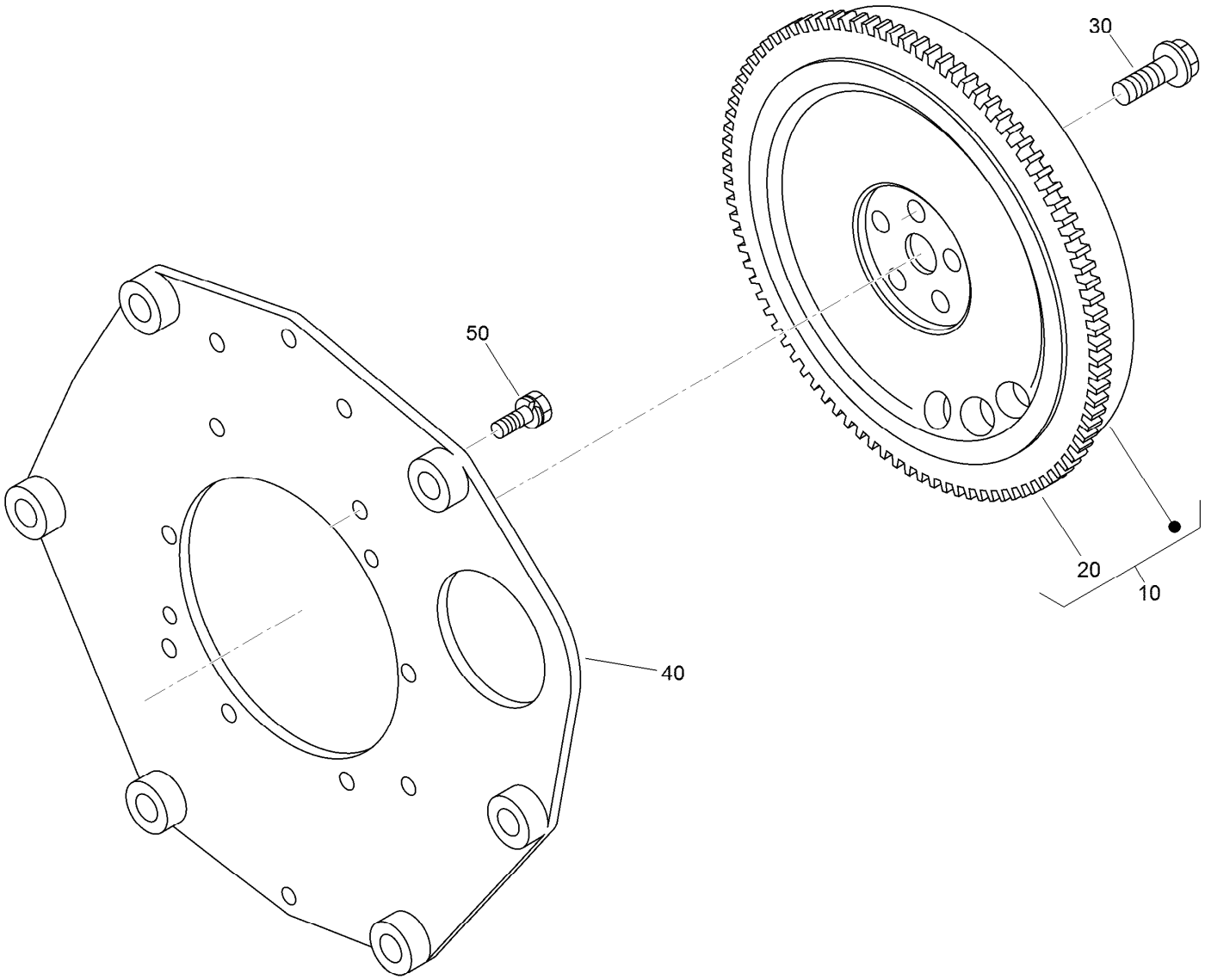

Flywheel Assembly

Ref.	Part Number	Qty.	Description
10	125-9054	1	Flywheel ASM
20	105-3722	1	Gear-Ring
30	125-9051	5	Bolt-Flywheel
40	125-9053	1	Plate-Rear End
50	110-3754	10	Bolt

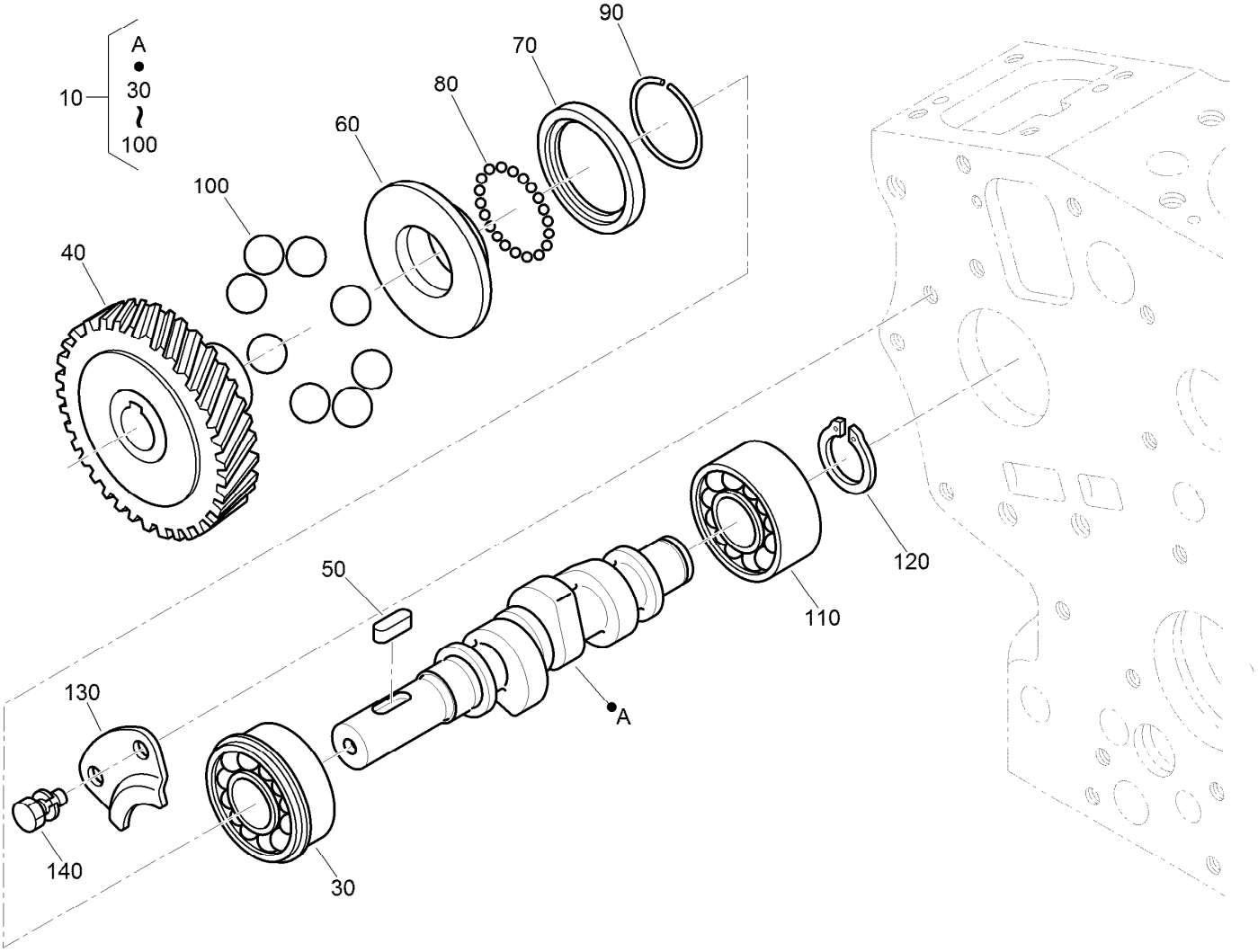

Fuel Camshaft Assembly

Ref.	Part Number	Qty.	Description
10	125-9075	1	Fuel Camshaft ASM
30	100-1795	1	Bearing-Ball
40	100-2006	1	Gear-Pump, Injection
50	100-1752	1	Key-Feather
60	112-8336	1	Sleeve-Governor
70	100-1904	1	Case-Ball, Governor
80	100-1790	32	Ball
90	100-1843	1	Circ-Clip
100	100-1793	8	Ball
110	110-3757	1	Bearing-Ball
120	100-1784	1	Circ-Clip, External
130	100-1888	1	Stopper-Fuel, Camshaft
140	98-9350	2	Bolt

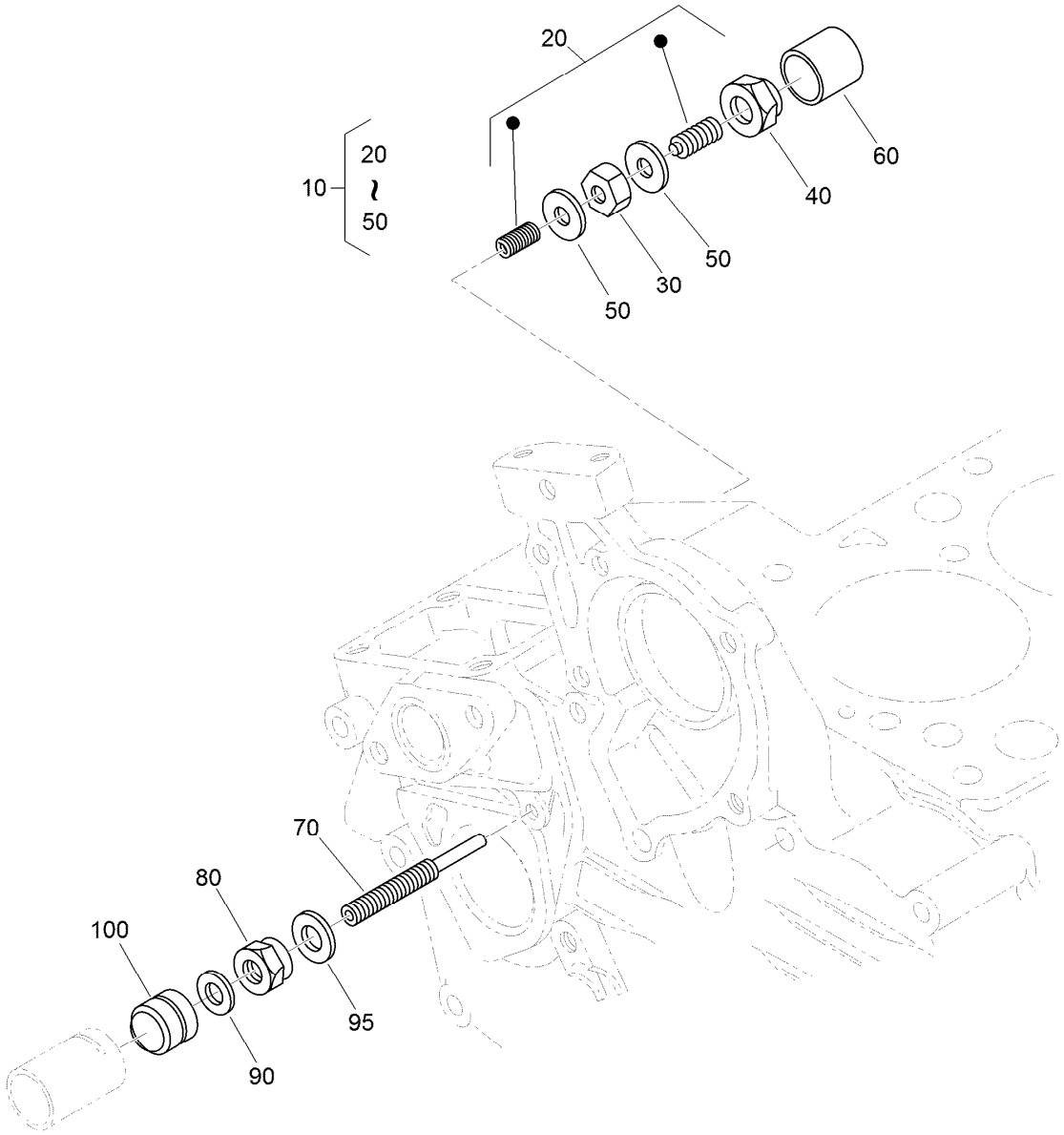

Idle Apparatus Assembly

Ref.	Part Number	Qty.	Description
10	100-1898	1	Idle Apparatus ASM
20	100-1899	1	Adjusting Bolt ASM
30	100-1846	1	Nut
40	100-1901	1	Nut-Cap
50	98-7428	2	Gasket
60	100-1902	1	Cap
70	110-3758	1	Bolt-Adjusting
80	100-2175	1	Nut-Lock
90	98-7654	1	Gasket
95	107-9081	1	Gasket
100	99-8387	1	Nut-Cap

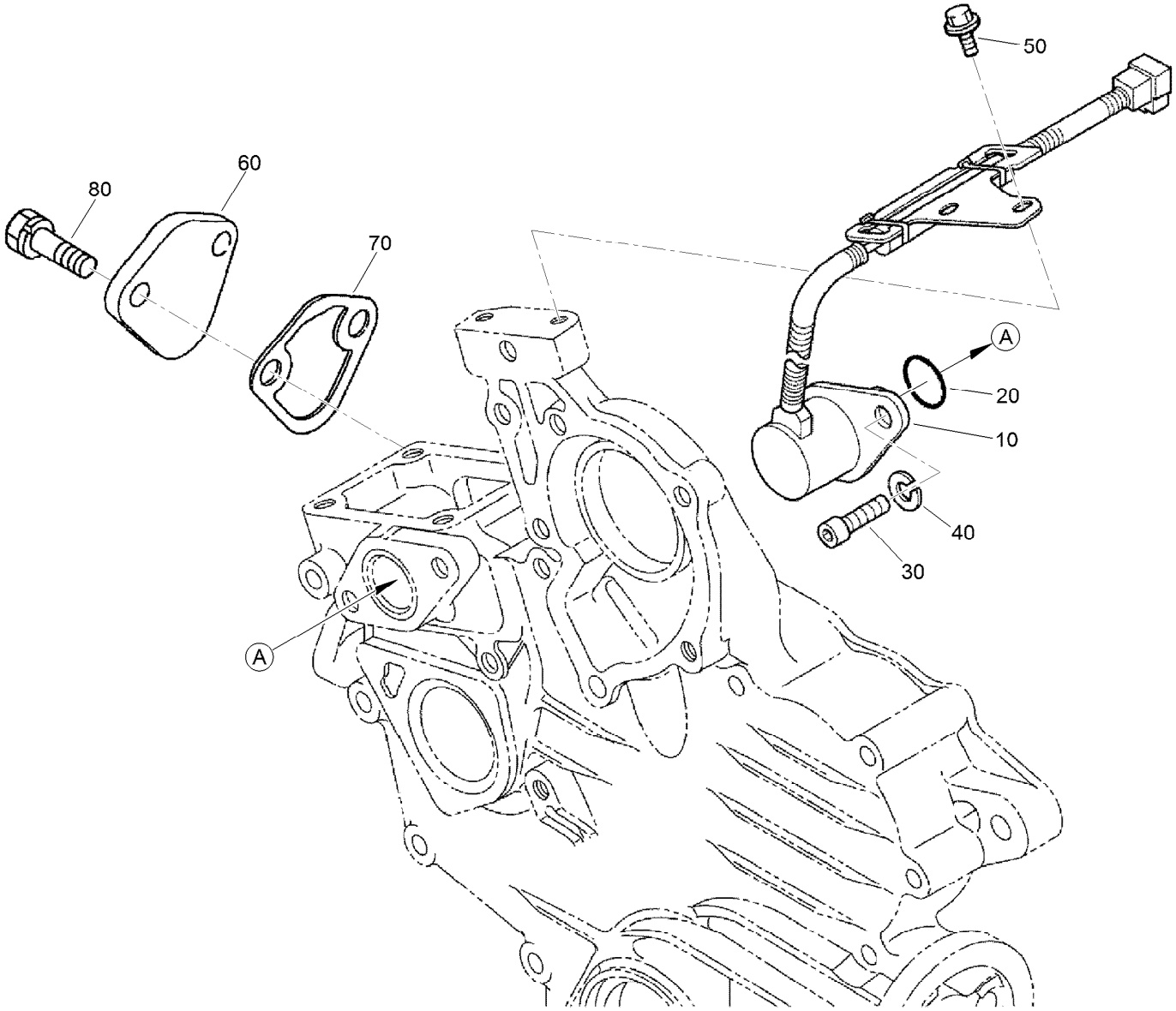

Stop Solenoid and Fuel Pump Cover Assembly

Ref.	*Part Number*	*Qty.*	*Description*
10	117-2719	1	Solenoid Stop ASM
20	110-3762	1	O-Ring
30	110-3763	2	Bolt-HSH
40	98-7699	1	Washer-Spring
50	100-1774	2	Bolt-Flange
60	99-3514	1	Cover
70	98-9636	1	Gasket-Pump, Fuel
80	98-7692	2	Bolt

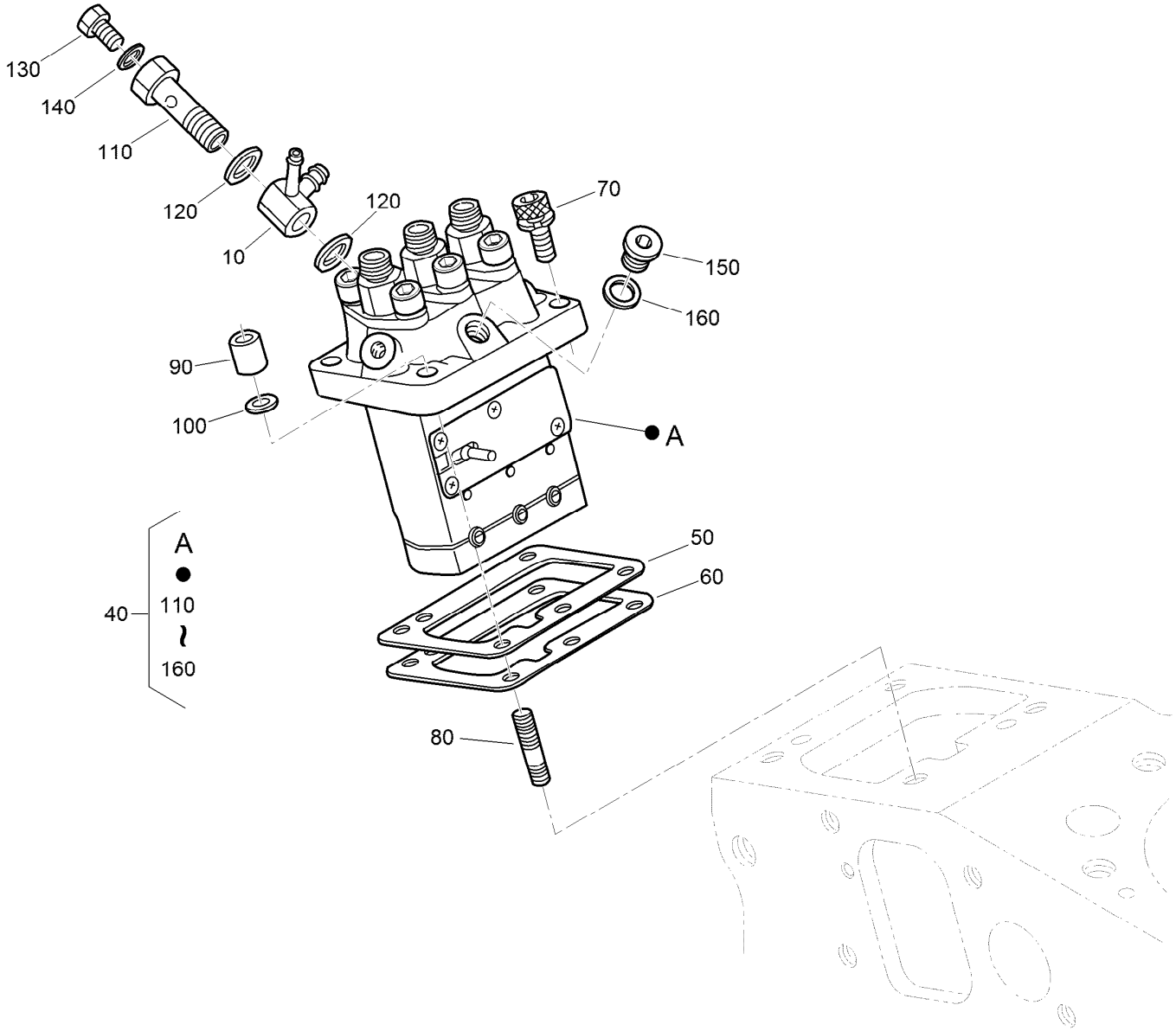

Injection Pump Assembly

Ref.	Part Number	Qty.	Description
10	110-3764	1	Joint
40	110-3765	1	Injection Pump ASM
50	115-3045	1	Shim-Injection (0.175MM)
50	98-9456	1	Shim-Injection (0.20MM)
50	98-9457	1	Shim-Injection (0.25MM)
60	98-9458	1	Shim-Injection (0.30MM)
60	115-3046	1	Shim-Injection (0.35MM)
70	117-7564	2	Bolt-Hex Soc HD
80	98-9438	2	Stud

Ref.	Part Number	Qty.	Description
90	98-9440	2	Nut-Cap
100	98-7699	2	Washer-Spring
110	100-1896	1	Screw-Hollow
120	98-9445	2	Gasket
130	98-9430	1	Screw
140	98-9446	1	Gasket
150	98-9466	1	Plug
160	98-9451	1	Gasket

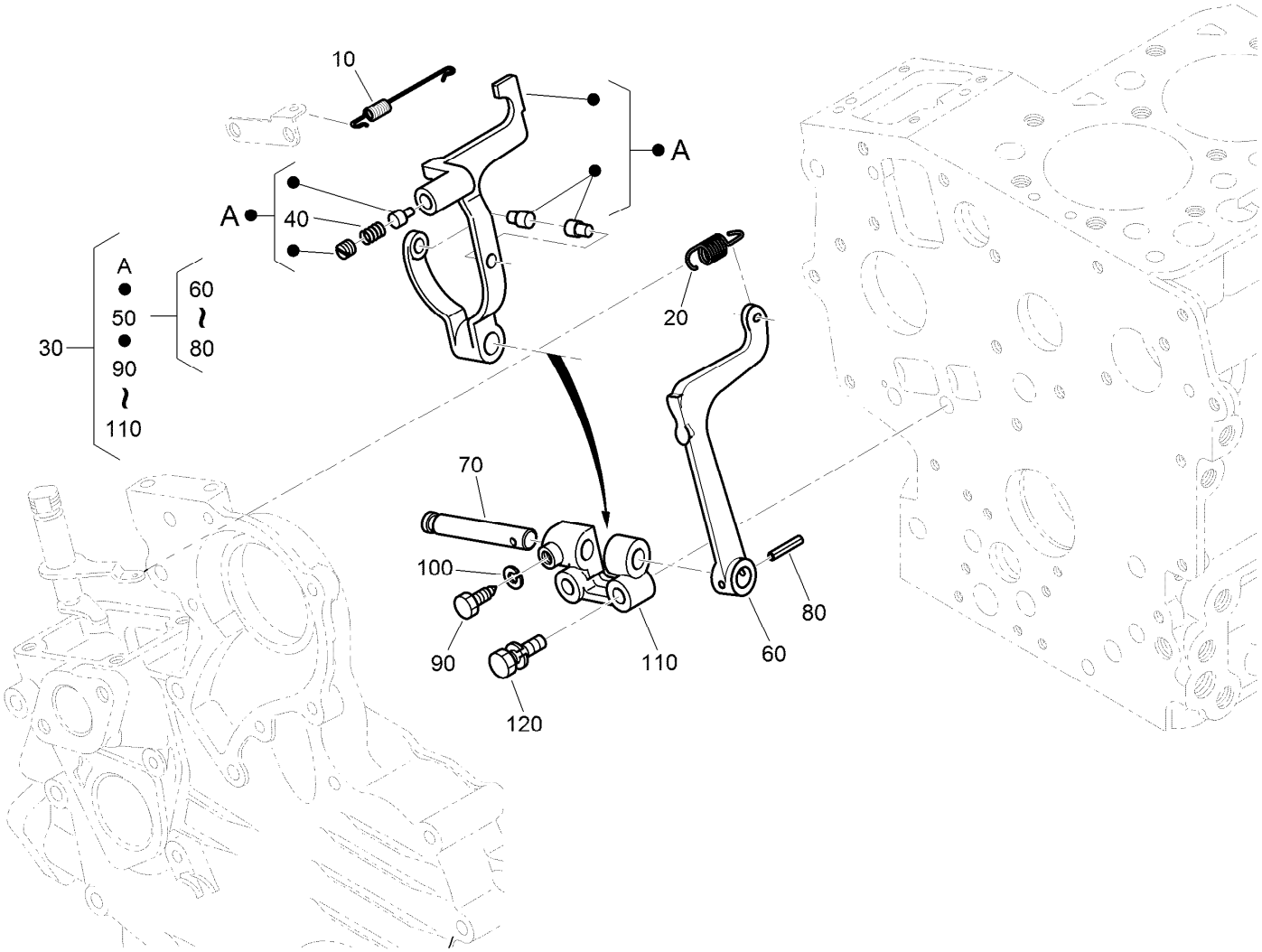

Governor Assembly

Ref.	Part Number	Qty.	Description
10	110-3766	1	Spring-Start
20	110-3767	1	Spring-Governor
30	130-1368	1	Fork Lever ASM
40	117-0313	1	Spring
50	100-1905	1	Fork Lever ASM
60	100-1907	1	Lever-Fork
70	100-1908	1	Shaft-Lever, Fork
80	100-1751	1	Pin-Spring
90	100-1845	1	Bolt
100	127-0408	1	Washer-Lock, Spring
110	100-1909	1	Holder-Lever, Fork
120	100-1763	2	Bolt

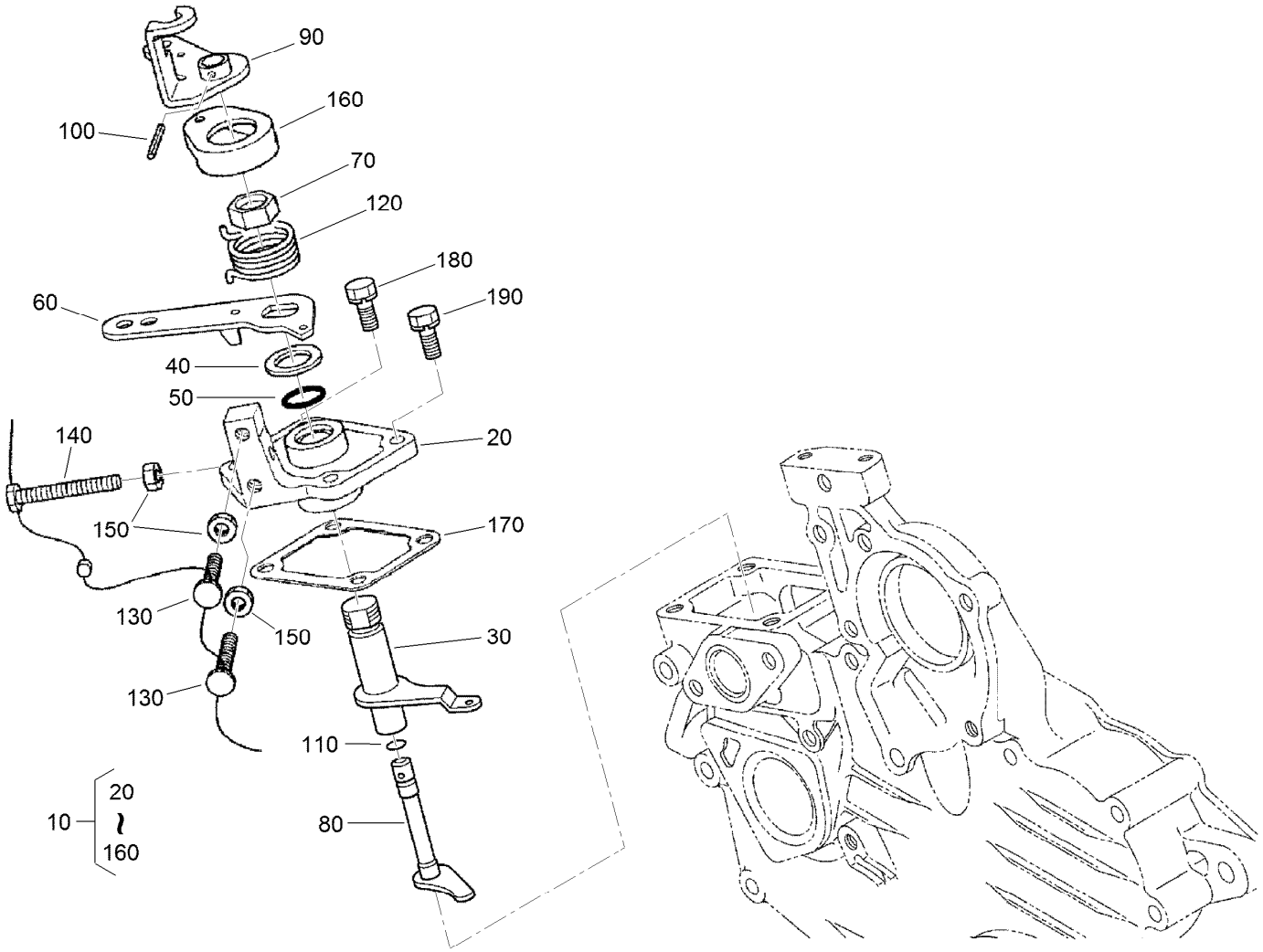

Speed Control Plate Assembly

Ref.	Part Number	Qty.	Description
10	110-3769	1	Speed Control Plate ASM
20	110-3770	1	Plate-Control, Speed
30	110-3771	1	Lever-Governor
40	110-3772	1	Collar
50	100-2208	1	O-Ring
60	110-3773	1	Lever-Control, Speed
70	110-3774	1	Nut-Control, Speed
80	110-3775	1	Shaft-Lever
90	110-3776	1	Lever-Stop, Engine
100	110-3777	1	Pin-Spring

Ref.	Part Number	Qty.	Description
110	100-2207	1	O-Ring
120	110-3778	1	Spring-Return
130	120-3133	2	Screw-Stopper
140	120-3134	1	Bolt
150	98-7572	3	Nut
160	110-3779	1	Cap
170	100-1962	1	Gasket-Plate, Control
180	127-0403	2	Bolt-Flange
190	112-2507	2	Bolt

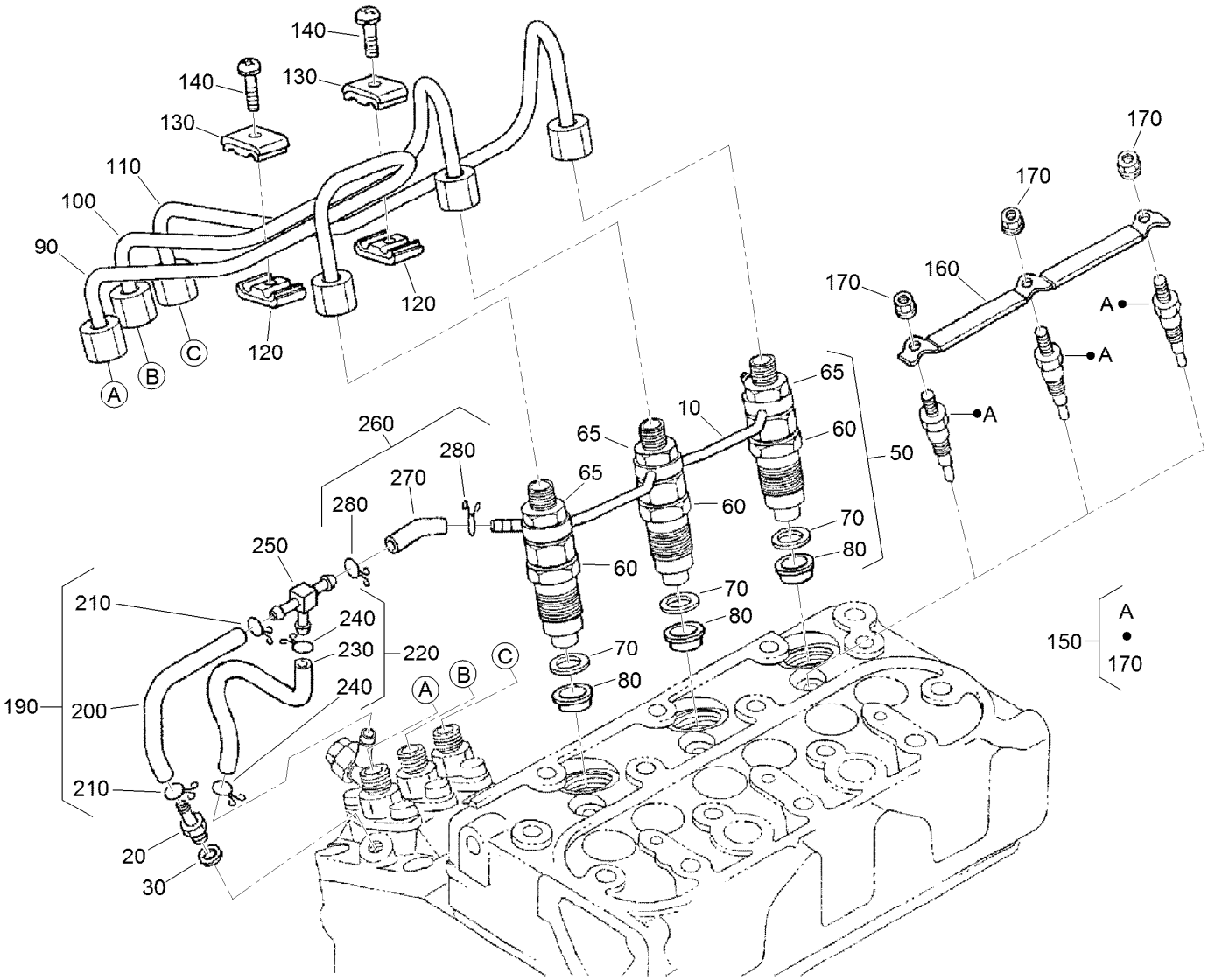

Nozzle Holder and Glow Plug Assembly

Ref.	Part Number	Qty.	Description
10	110-3780	1	Over Flow Pipe ASM
20	98-9431	1	Screw-Bleeder, Air
30	98-7654	1	Gasket
50	130-1305	3	Nozzle Holder Kit
60	130-1303	3	Nozzle Holder ASM
65	121-2411	3	Nut
70	98-7676	3	Gasket
80	98-7677	3	Seal-Heat
90	130-1522	1	Pipe-Injection
100	130-1523	1	Pipe-Injection
110	130-1541	1	Pipe-Injection
120	98-7682	2	Clamp-Pipe
130	98-7683	2	Clamp-Pipe
140	98-7684	2	Screw (W/Washer)

Ref.	Part Number	Qty.	Description
150	130-1411	3	Plug-Glow
160	110-3784	1	Cord-Plug, Glow
170	99-8377	3	Nut-Flange
190	110-3785	1	Fuel Tube ASM
200	110-3786	1	Tube-Fuel
210	98-7671	2	Clip-Pipe
220	110-3787	1	Fuel Tube ASM
230	110-3788	1	Tube-Fuel
240	98-7671	2	Clip-Pipe
250	112-8338	1	Pipe-Joint, T
260	110-3790	1	Fuel Tube ASM
270	110-3791	1	Tube-Fuel
280	98-7671	2	Clip-Pipe

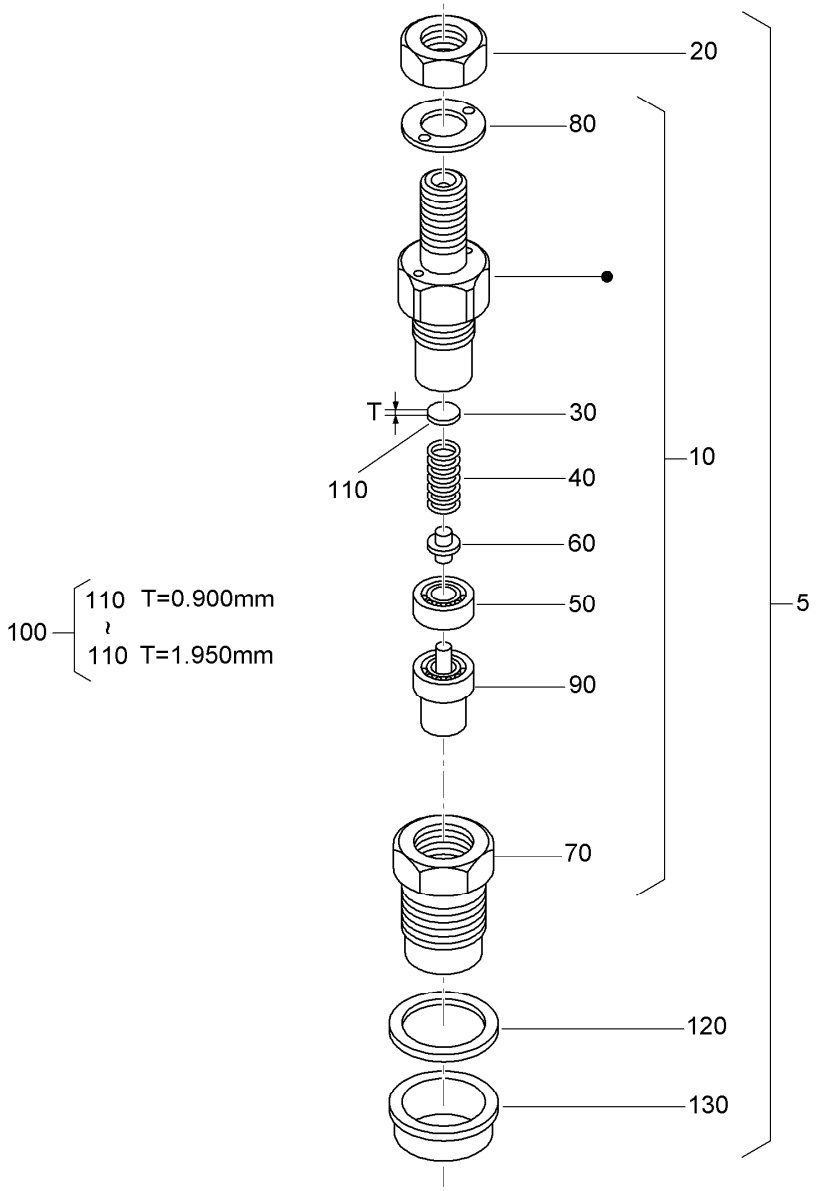

Nozzle Holder Assembly

Ref.	Part Number	Qty.	Description
5	130-1305	3	Nozzle Holder Kit
10	130-1303	3	Nozzle Holder ASM
20	121-2411	3	Nut
30	99-8302	3	Washer-Adjusting
40	99-8303	3	Spring-Nozzle
50	99-8304	3	Spacer-Distance
60	99-8305	3	Rod-Push
70	130-1304	3	Nut-Nozzle
80	99-8307	3	Washer-Plain
90	130-1497	3	Nozzle-Piece
100	98-9448	3	Adjusting Washer ASM
110	98-7642	3	Washer-Adjusting (0.900Mm)
110	98-7841	3	Washer-Adjusting (0.925Mm)
110	98-7842	3	Washer-Adjusting (0.950Mm)
110	98-7843	3	Washer-Adjusting (0.975Mm)
110	98-7844	3	Washer-Adjusting (1.000Mm)
110	98-7845	3	Washer-Adjusting (1.025Mm)
110	98-7846	3	Washer-Adjusting (1.050Mm)
110	98-7847	3	Washer-Adjusting (1.075MM)
110	98-7848	3	Washer-Adjusting (1.100MM)
110	98-7849	3	Washer-Adjusting (1.125MM)
110	98-7850	3	Washer-Adjusting (1.150MM)
110	98-7851	3	Washer-Adjusting (1.175MM)
110	98-7852	3	Washer-Adjusting (1.200MM)
110	98-7853	3	Washer-Adjusting (1.225MM)
110	98-7854	3	Washer-Adjusting (1.250MM)

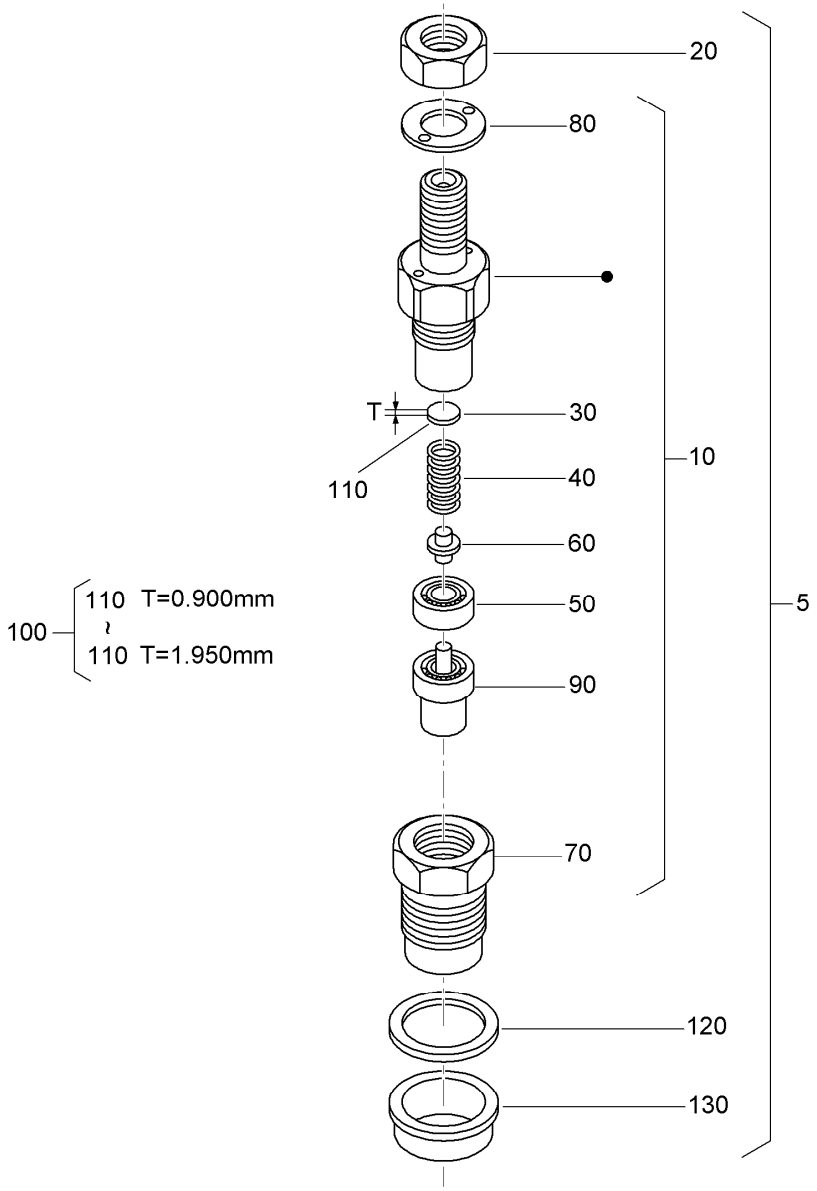

Nozzle Holder Assembly (continued)

Ref.	Part Number	Qty.	Description
110	98-7855	3	Washer-Adjusting (1.275MM)
110	98-7856	3	Washer-Adjusting 1.300MM)
110	98-7857	3	Washer-Adjusting (1.325MM)
110	98-7858	3	Washer-Adjusting (1.350MM)
110	98-7859	3	Washer-Adjusting (1.375MM)
110	98-7860	3	Washer-Adjusting (1.400MM)
110	98-7861	3	Washer-Adjusting (1.425MM)
110	98-7862	3	Washer-Adjusting (1.450MM)
110	98-7863	3	Washer-Adjusting (1.475MM)
110	98-7864	3	Washer-Adjusting (1.500MM)

Ref.	Part Number	Qty.	Description
110	98-7865	3	Washer-Adjusting (1.525MM)
110	98-7866	3	Washer-Adjusting (1.550MM)
110	98-7867	3	Washer-Adjusting (1.575MM)
110	98-7868	3	Washer-Adjusting (1.600MM)
110	98-7869	3	Washer-Adjusting (1.625MM)
110	98-7870	3	Washer-Adjusting (1.650MM)
110	98-7871	3	Washer-Adjusting (1.675MM)
110	98-7872	3	Washer-Adjusting (1.700MM)
110	98-7873	3	Washer-Adjusting (1.725MM)
110	98-7874	3	Washer-Adjusting (1.750MM)

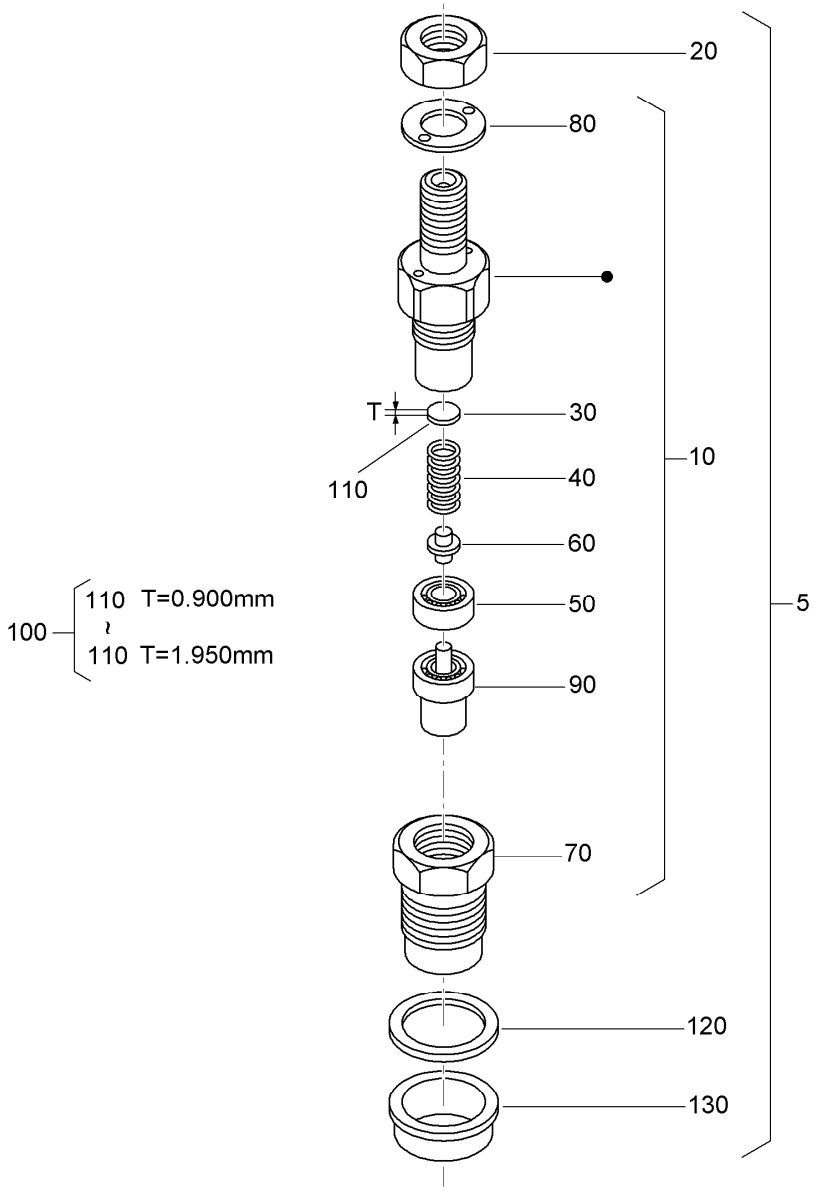

Nozzle Holder Assembly (continued)

Ref.	Part Number	Qty.	Description
110	98-7875	3	Washer-Adjusting (1.775MM)
110	98-7876	3	Washer-Adjusting (1.800MM)
110	98-7877	3	Washer-Adjusting (1.825MM)
110	98-7878	3	Washer-Adjusting (1.850MM)
110	98-7879	3	Washer-Adjusting (1.875MM)

Ref.	Part Number	Qty.	Description
110	98-7880	3	Washer-Adjusting (1.900MM)
110	98-7881	3	Washer-Adjusting (1.925MM)
110	98-7882	3	Washer-Adjusting (1.950MM)
120	98-7676	3	Gasket
130	98-7677	3	Seal-Heat

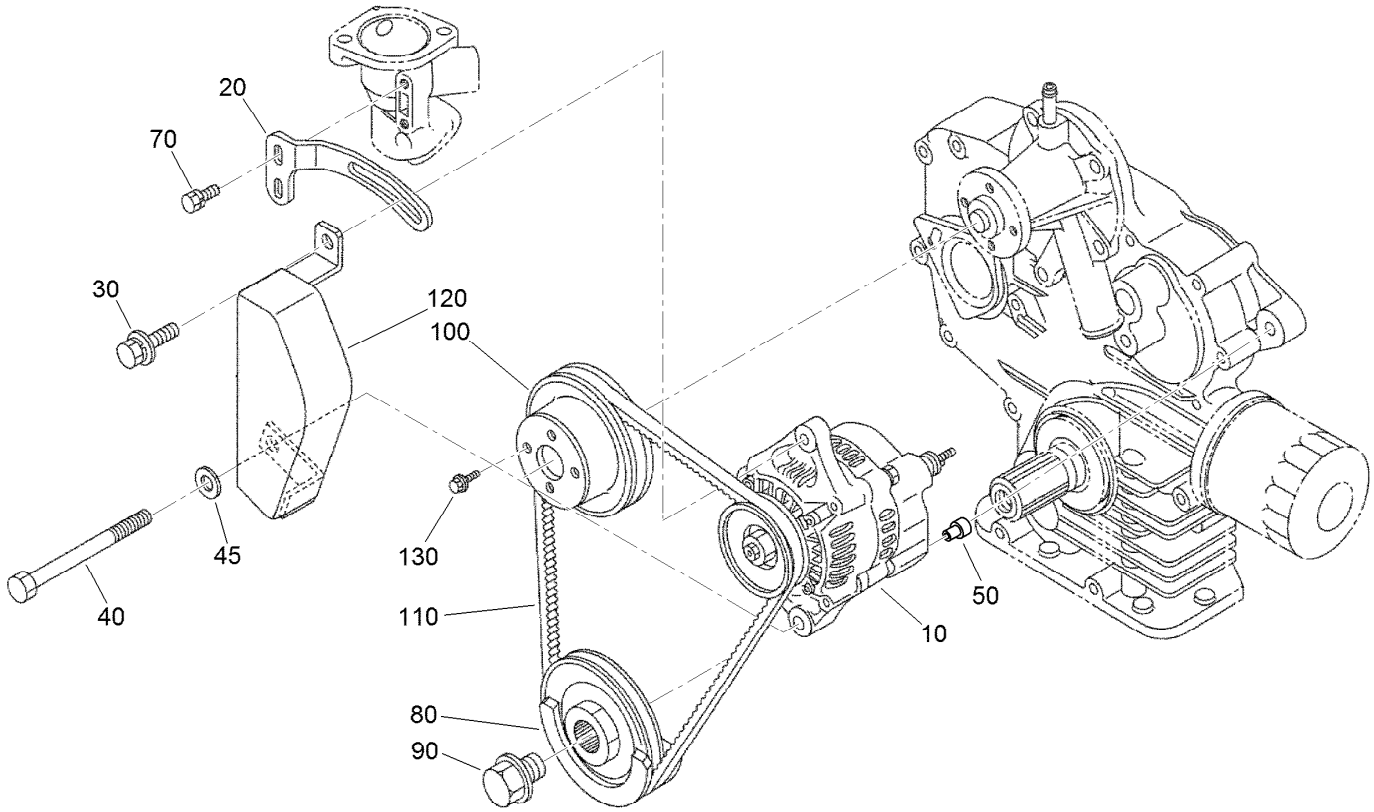

Alternator and Pulley Assembly

Ref.	*Part Number*	*Qty.*	*Description*
10	117-5541	1	60 Amp Alternator ASM
20	117-0314	1	Stay-Alternator
30	121-3800	1	Bolt-Sems
40	110-3793	1	Bolt
45	120-5832	1	Washer-Plain
50	110-3794	1	Collar
70	98-7692	2	Bolt
80	125-9055	1	Pulley-Drive, Fan
90	100-1978	1	Bolt
100	100-1921	1	Pulley-Fan
110	110-3796	1	Belt-V
120	117-0315	1	Cover-Alternator
130	99-8363	4	Bolt-Flange

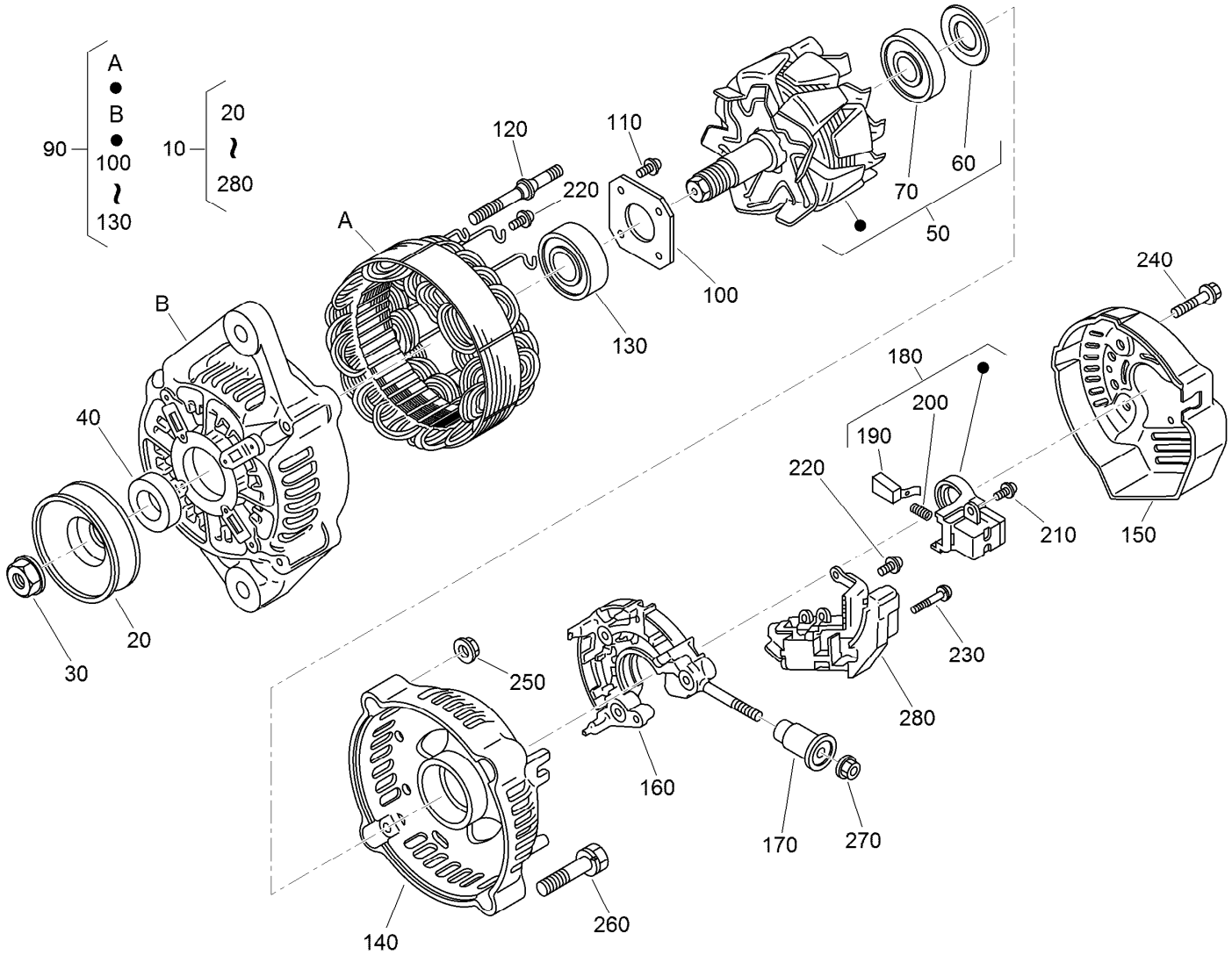

Alternator Components Assembly

Ref.	Part Number	Qty.	Description
10	117-5541	1	60 Amp Alternator ASM
20	98-9453	1	Pulley-Dynamo
30	98-7708	1	Nut
40	98-7709	1	Collar
50	117-0317	1	Rotor ASM
60	98-7711	1	Cover-Bearing
70	107-0138	1	Bearing-Ball
90	117-0316	1	Drive End Frame ASM
100	98-7715	1	Plate-Retainer
110	98-7716	4	Screw-Head, Round
120	98-7717	2	Bolt-Through
130	133-2811	1	Bearing
140	133-2813	1	Frame-End
150	117-0320	1	Cover-End

Ref.	Part Number	Qty.	Description
160	117-0322	1	Holder
170	117-0321	1	Insulation-Brush
180	107-0141	1	Brush Holder ASM
190	98-7724	2	Brush
200	98-7725	2	Spring-Brush
210	98-7727	6	Screw-Head, Round
220	98-7728	1	Screw-Head, Round
230	98-7726	2	Screw-Head, Round
240	98-7729	3	Bolt
250	98-7730	2	Nut
260	98-7731	2	Bolt
270	98-7732	1	Nut
280	117-0319	1	Regulator ASM

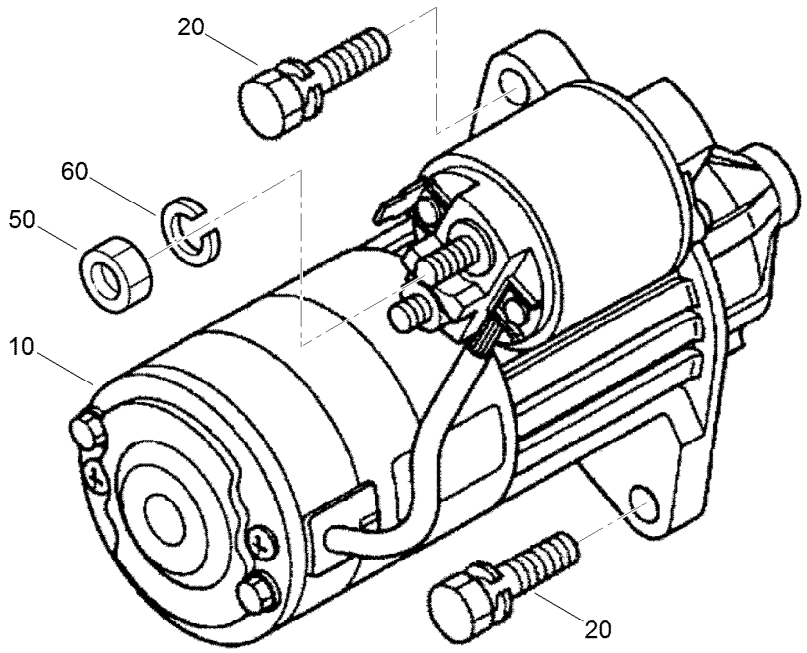

Starter Installation Assembly

Ref.	*Part Number*	*Qty.*	*Description*
10	110-3800	1	Starter ASM
20	98-7697	2	Bolt
50	98-7534	1	Nut
60	105-2893	1	Washer-Spring

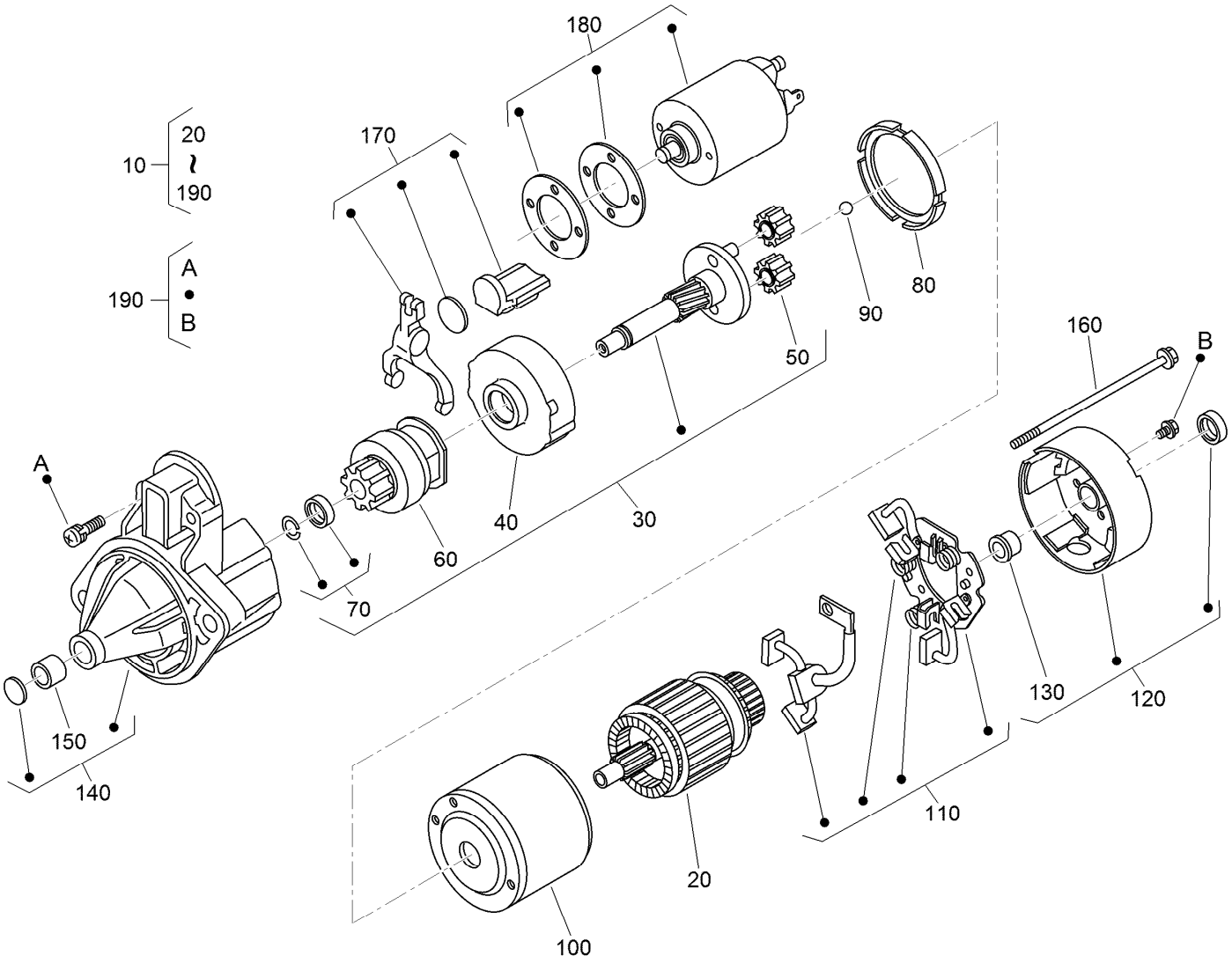

Starter Component Assembly

Ref.	Part Number	Qty.	Description
10	110-3800	1	Starter ASM
20	110-3801	1	Armature
30	110-3802	1	Shaft ASM
40	120-3142	1	Gear-Internal
50	110-3804	3	Gear-Planetary
60	110-3805	1	Clutch-Running, Over
70	110-3806	1	Stopper
80	120-3143	1	Gasket
90	110-3808	1	Ball
100	130-1295	1	Yoke

Ref.	Part Number	Qty.	Description
110	110-3810	1	Brush Holder ASM
120	110-3811	1	Rear Bracket ASM
130	110-3812	1	Bushing
140	110-3813	1	Front Bracket ASM
150	110-3814	1	Bushing
160	110-3815	2	Bolt
170	110-3816	1	Fork Lever ASM
180	125-9099	1	Switch-Magnetic
190	110-3818	2	Screws (Set Of 4)

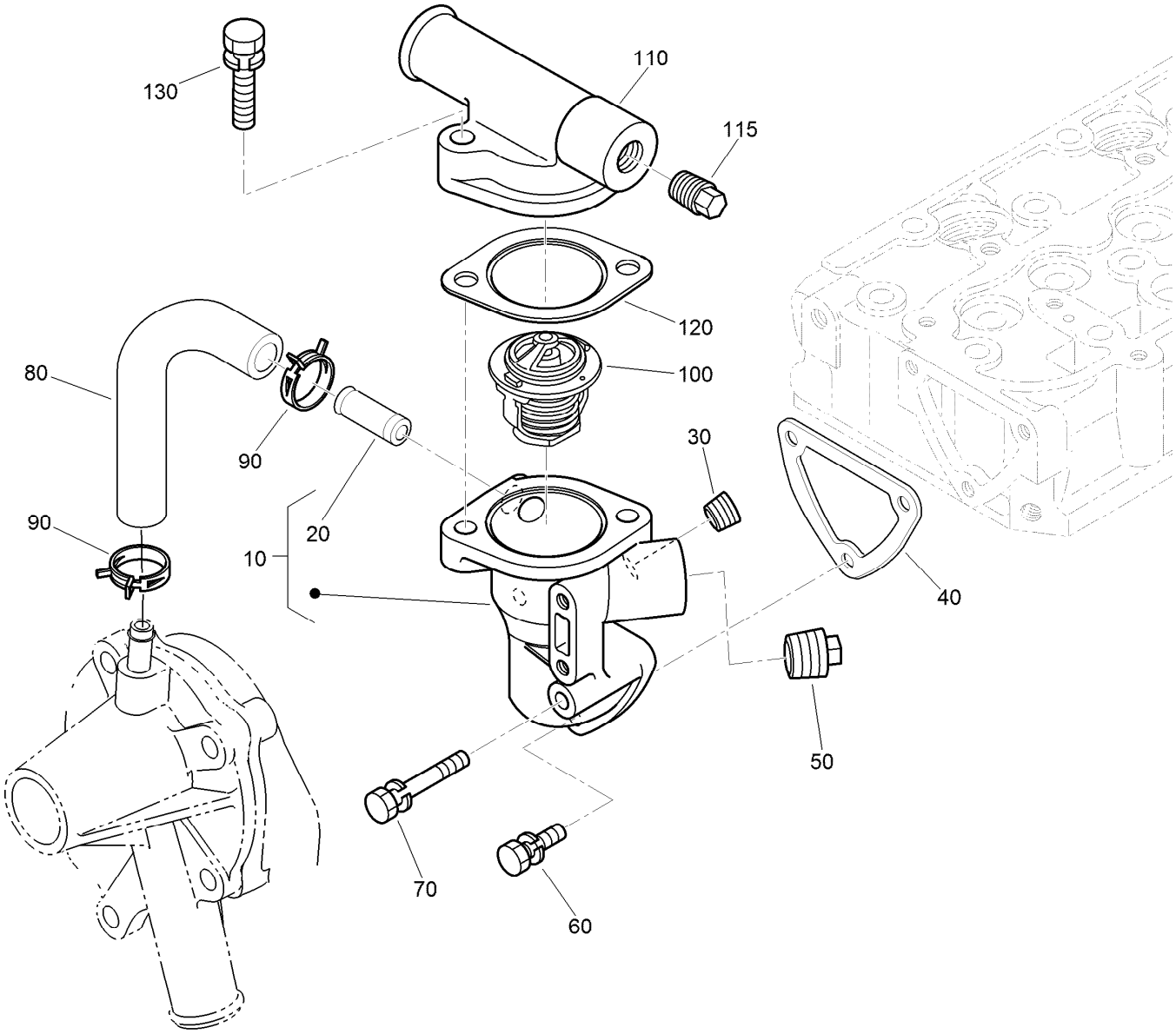

Water Flange and Thermostat Assembly

Ref.	Part Number	Qty.	Description
10	110-3819	1	Water Flange ASM
20	98-9580	1	Pipe-Return, Water
30	98-9444	1	Plug
40	110-3820	1	Gasket-Flange, Water
50	110-3821	1	Plug
60	98-7692	2	Bolt
70	125-9063	1	Bolt-Sems
80	110-3822	1	Pipe-Return, Water
90	125-9078	2	Clamp-Hose
100	98-7778	1	Thermostat ASM
110	120-7575	1	Cover-Thermostat
115	125-9079	1	Plug
120	105-3748	1	Gasket-Thermostat
130	98-7777	2	Bolt

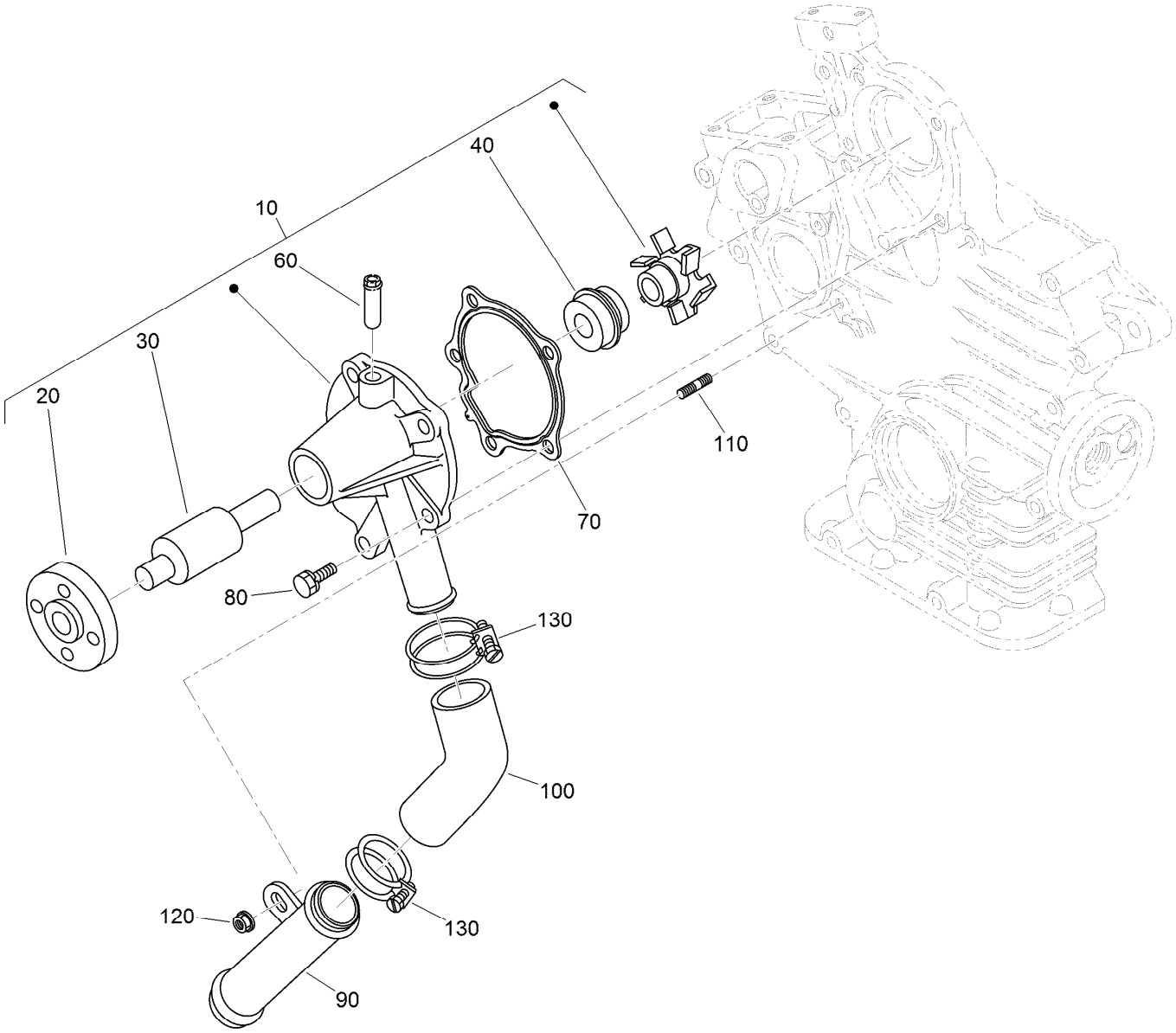

Water Pump and Water Pipe Assembly

Ref.	Part Number	Qty.	Description
10	110-3824	1	Water Pump ASM
20	125-9081	1	Flange-Pump, Water
30	100-1934	1	Bearing-Ball
40	99-3518	1	Water Pump Seal ASM
60	100-1932	1	Pipe-Return, Water
70	117-0330	1	Gasket-Pump, Water
80	100-1750	4	Bolt
90	100-1918	1	Pipe-Water
100	110-3827	1	Pipe-Water
110	100-1924	1	Stud
120	100-2203	1	Nut-Flange
130	110-3828	2	Band-Pipe

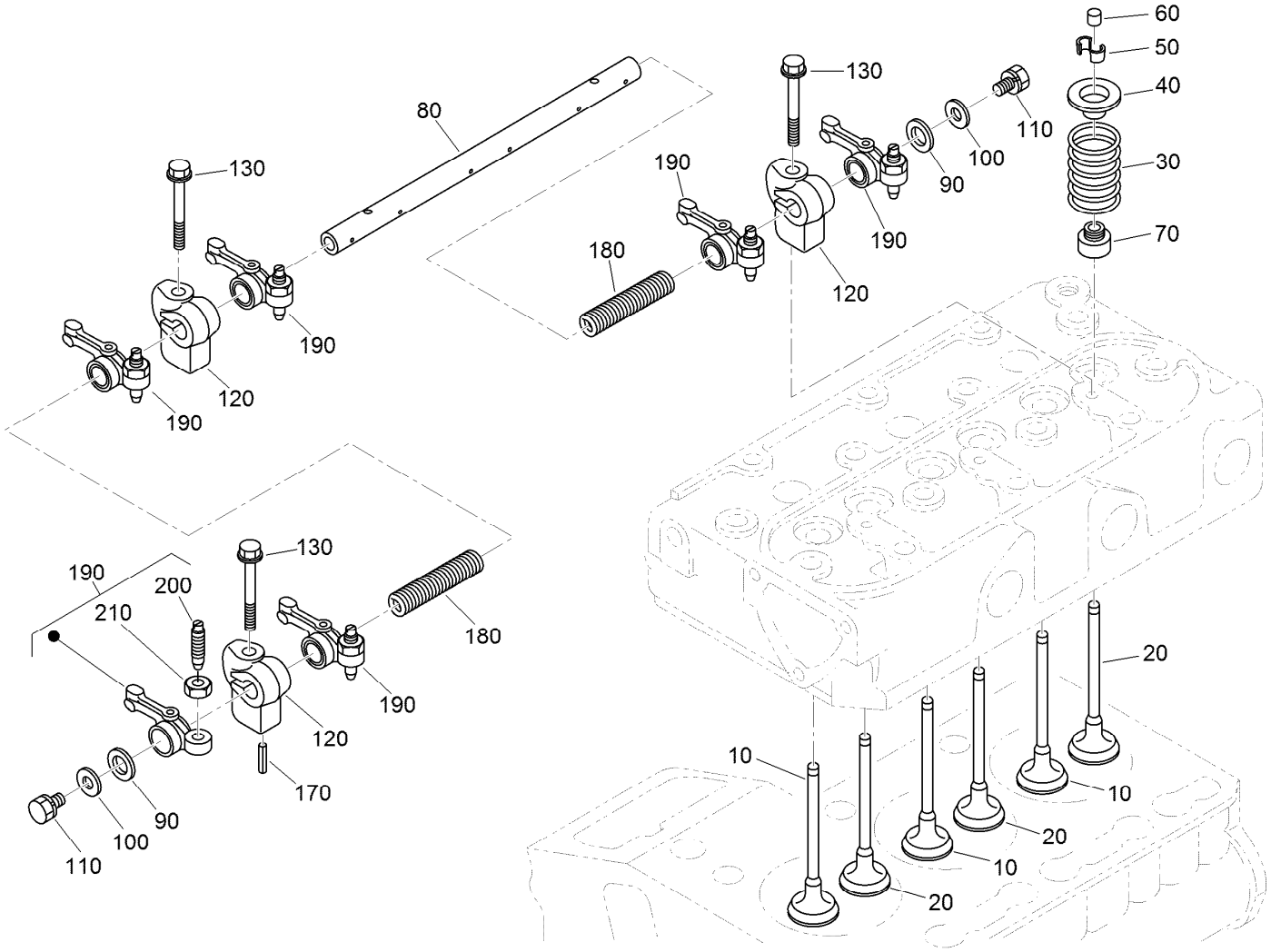

Valve and Rocker Arm Assembly

Ref.	Part Number	Qty.	Description
10	112-2514	3	Valve-Inlet
20	112-2515	3	Valve-Exhaust
30	100-1823	6	Spring-Valve
40	100-1825	6	Retainer-Spring, Valve
50	120-3136	6	Collet-Spring, Valve
60	100-2155	6	Cap-Valve
70	100-1797	6	Seal-Stem, Valve
80	112-8341	1	Shaft-Arm, Rocker
90	100-2044	2	Washer

Ref.	Part Number	Qty.	Description
100	110-3832	2	Washer-Plain
110	100-1762	2	Bolt
120	110-3833	3	Bracket-Arm, Rocker
130	110-3834	3	Bolt-Flange
170	98-7602	1	Pin-Spring
180	112-8342	2	Spring
190	100-1884	6	Rocker Arm ASM
200	100-1885	6	Screw-Adjusting
210	100-1827	6	Nut

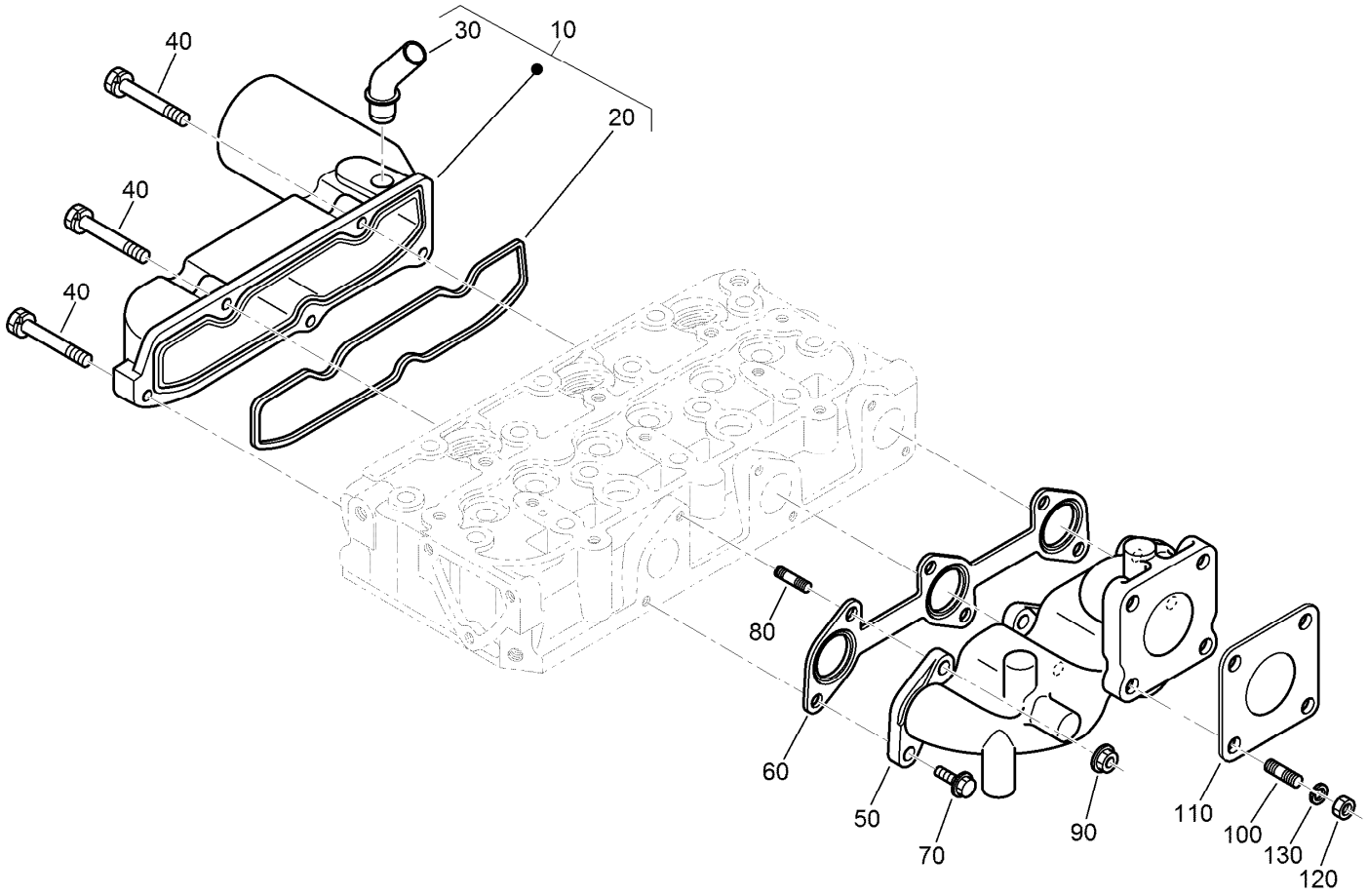

Inlet and Exhaust Manifold Assembly

Ref.	Part Number	Qty.	Description
10	120-3141	1	Intake Manifold ASM
20	110-3838	1	Gasket-Manifold, Intake
30	121-2417	1	Pipe-Breather
40	98-9352	5	Bolt
50	110-3839	1	Manifold-Exhaust
60	110-3840	1	Gasket-Manifold, Exhaust
70	130-1154	3	Screw-Hex HD
80	130-1156	3	Bolt-Stud
90	100-1778	3	Nut
100	98-7769	4	Stud
110	99-8343	1	Gasket-Muffler
120	98-7534	4	Nut
130	105-2893	4	Washer-Spring

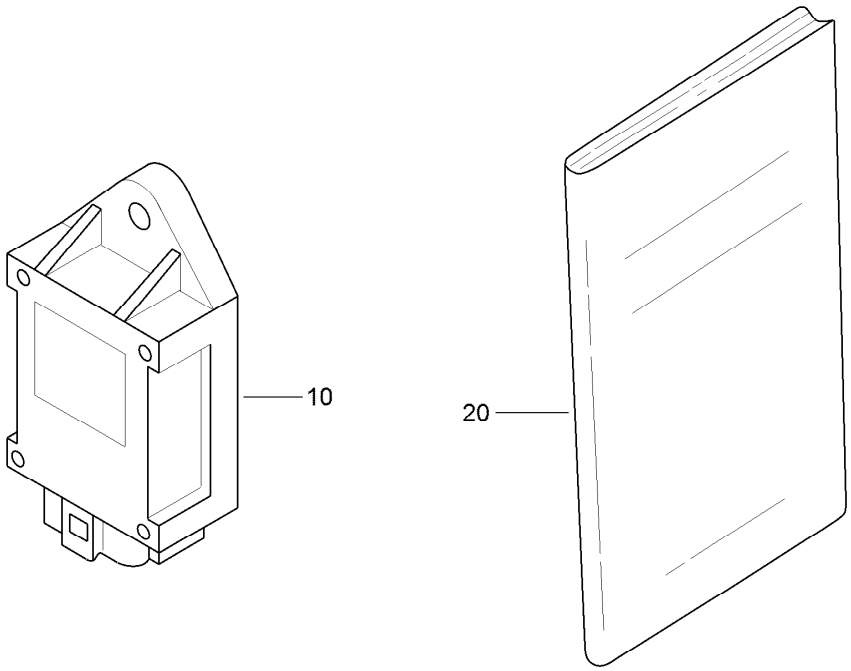

Miscellaneous Engine Parts

Ref.	*Part Number*	*Qty.*	*Description*
10	98-7611	1	Controller-Glow
20	130-1513	1	Manual-Operator

Attachments and Accessories

For 07385 Workman HDX-D Utility Vehicle with Bed

Product Name	Model/Part
Hitch Pin	100-4523
Pro Sweep Turf Sweeper	07068
Jack Stand	105-9482-03
High-Flow Hydraulic Kit	07316
Backup Alarm Kit	127-8729
Bed Liner	07331
Work Light Kit	130-5485
Beacon Kit	130-5484
Topdresser 1800	44225
Exterior Mirror Kit	130-5448
Topdresser 1800 Lift Kit	92-4452
Interior Mirror Kit	130-5449
Tire/Wheel ASM (24 X 12-12)	131-8428
Windshield Washer Fluid Kit, 2015 and after Workman MD/HD Series Utility Vehicle	130-5615
Tire/Wheel ASM (20 X 9-12)	131-8430
Fitting-Grease	30249
Topdresser 2500	44507
Synthetic Turf Conditioner, Tow-Behind Accessory	08791
Spark Arrestor Screen	94-8157
Rear PTO Kit	07419
Brake and Signal LED Light Kit, Serial number 410500000 and After Workman HD Utility Vehicle	145-2296
Multi Pro WM Turf Sprayer	41240
LED Trailer Signal Kit	147-2791
Hitch ASM	131-3462
Cab Kit	07392
Door Kit with Sliding Window	07393
Heater Kit	07349
Premium All Purpose Grease (Tube)	108-1190
12 Inch Rear Wheel Weights	81115
Worklight Kit	117-4827
Backup Alarm Kit	107-8037
High Air Intake Kit	121-6285
Hand Throttle Kit	07420
Side Mirror Kit	115-7849
Horn Kit	115-7825
Tailpipe Extension Kit	127-7397
Tire-Rear	131-8433
LED Worklight Kit	133-0554
ROPS Beacon Kit	133-0609
PTO Over Running Clutch Kit	92-2655
Fuse Block	92-2641
1/3 Area Cover Kit	127-8739
Remote Hydraulic Float Kit	117-4828
Canopy	07372
Windshield	07373

Attachments and Accessories (continued)

Wireless Hourmeter	115-4754
Door Mount Mirror Kit	136-1997
Premium ATF (Drum)	108-1185
Premium ATF (Pail)	108-1186
Remote Hydraulics Manifold Kit	110-2626
Roll-Over Protection System Signal Kit	117-4825
4 Post Roll-Over Protection System	07378
Small Seat Cover	131-6690
Receiver Hitch Kit	117-4831
Trailer Signal Kit	117-4836
Trailer Brake Kit	125-0123
Tire/Wheel ASM (24 X 13-12)	131-8432
External Antenna Kit, Wireless Hourmeter System	115-9524
Base Station Kit, Wireless Hourmeter System	115-9542
Repeater Kit, Wireless Hourmeter System	115-9543
Canopy for Four-Post Roll-Over Protection System Kit	119-9457
LED Homologation Lamp Kit	147-2798
Tire-Rear, Industrial	99-1091
Wheel-12in x 8.0in	114-8260
Power Point Kit	131-8550
Road Light and Homologation Kit	120-5030
ProPass 200 Top Dresser with Twin Spinner and Wireless Control	44751
ProPass 200 Top Dresser with Twin Spinner	44701
Pro Force Debris Blower	44553
Pro Force Debris Blower	44552
Aggressive Tire Kit	07422
Bracket-light, Canopy	133-0627
Pro Force Debris Blower	44554
Wheel/Tire ASM, A404 (20X9-12)Smooth	136-6334
Wheel/Tire ASM, A404 (24X12-12)Smooth	136-6335
Wheel/Tire ASM, A502 (20X9-12)Semi-Aggressive	136-6308
Wheel/Tire ASM, K502 (24X12-12)Semi-Aggressive	136-6309

Notes:

Notes:

TORO®

Count on it.