Form No. 3461-606 Rev C

TORO®

Count on it.

Parts Catalog

Greensmaster® 3250-D 2-Wheel Drive Traction Unit

Model No. 04384—Serial No. 414340968 and Up

Register at www.Toro.com.
Original Instructions (EN)

CE

3461-606 C

Ordering Replacement Parts

To order replacement parts, please supply the part number, the quantity, and the description of each part desired.

Understanding Reference Numbers

Each identified part in an illustration has a reference number. The reference number for a part also appears in the parts list, along with other information about the part.

This catalog uses two special reference number formats, one to indicate parts in a service assembly and another to indicate the quantity of a given part in an illustration.

Service Assembly Reference Numbers

Parts in service assemblies have reference numbers in the form a:b. The a represents the reference number of the entire service assembly and the b represents a sequential number unique to each part within the service assembly.

For example, a wheel assembly might be identified by reference number 6, the tire by 6:1, the valve by 6:2, and the wheel by 6:3. When you order the assembly identified by reference number 6, you receive all parts identified by reference numbers 6:1,6:2, and 6:3. However, you may also order any part individually. Reference numbers of this type appear in illustration and in parts lists.

Reference Numbers Indicating Quantity

In an illustration, if a reference number indicates more than one part, the reference number has the form nX y. The n represents the quantity of the part, the X is the multiplication symbol, and the y represents the reference number.

For example, in an illustration, the reference number 2X 37 means that two of the parts identified by reference number 37 are indicated.

Contents

Roll-Over Protection System Assembly . . . 5
Frame Assembly. . . . 6
Traction Control Assembly . . . 7
Brake Pedal Assembly . . . 9
Steering Arm Assembly. . . . 10
Operator Platform Assembly . . . 11
Seat Assembly . . . 12
Engine Assembly . . . 14
Intake and Exhaust Assembly . . . 15
Air Cleaner Assembly No. 95-5805. . . . 16
Radiator Assembly. . . . 17
Fuel System Assembly . . . 18
Hydraulic Tank and Filter Assembly. . . . 19
Hydrostat and Gear Pump Drive Assembly . . . 20
Hydraulic Gear Pump Assembly No. 114-9956. . . . 22
Manifold Assembly. . . . 23
Hydraulic Manifold Assembly No. 147-3077 . . . 24
Steering Valve Assembly. . . . 26
Steering Valve Assembly No. 114-4672 . . . 27
Hydraulic Cylinder Assembly No. 132-3778 . . . 28
Left Hand Wheel Motor and Lift Cylinder Assembly . . . 29
Hydraulic Motor Assembly (CCW) No. 110-4015 . . . 30
Hydraulic Cylinder Assembly No. 139-2651 . . . 31
Right Hand Wheel Motor and Lift Cylinder Assembly . . . 32
Hydraulic Motor Assembly (CW) No. 110-4016. . . . 33
Hydraulic Reel Motor Assembly No. 120-2072 . . . 34
Front Reel Motors Assembly . . . 35
Center Lift Cylinder Assembly . . . 36
Hydraulic Cylinder Assembly No. 139-2650 . . . 37
Console Assembly . . . 38
Joystick Bracket Assembly No. 120-5280 . . . 39
Electrical Harness Assembly . . . 40
Battery Assembly . . . 41
Front Wheel and Brake Assembly . . . 42
Rear Wheel and Brake Assembly . . . 43
Right Cutting Unit Suspension Assembly . . . 44
Left Cutting Unit Suspension Assembly . . . 46
Center Cutting Unit Suspension Assembly. . . . 48
Crankcase Assembly. . . . 50
Oil Pan, Oil Pump and Dipstick Assembly . . . 51
Cylinder Head Assembly. . . . 52
Gear Case and Oil Filter Cartridge Assembly . . . 53
Cylinder Head Cover Assembly . . . 54
Main Bearing Case Assembly . . . 55
Camshaft and Idle Gear Shaft Assembly . . . 56
Piston and Crankshaft Assembly. . . . 57
Fuel Camshaft Assembly . . . 58
Idle Apparatus and Fuel Pump Cover Assembly . . . 59
Stop Solenoid and Speed Control Plate Assembly . . . 60
Injection Pump Assembly . . . 61
Governor Assembly . . . 62
Nozzle Holder and Glow Plug Assembly . . . 63
Nozzle Holder Assembly. . . . 64
Alternator and Pulley Assembly . . . 66

© 2023—The Toro® Company

8111 Lyndale Avenue South
Bloomington, MN 55420

Contact us at www.Toro.com.
Printed in the USA.

All Rights Reserved

Contents (continued)

Alternator Assembly No. 131-6557 67
Starter and Flywheel Assembly 68
Starter Component Assembly 69
Water Flange and Thermostat Assembly 70
Water Pump and Water Pipe Assembly 71
Valve and Rocker Arm Assembly 72
Inlet and Exhaust Manifold Assembly 73
Attachments and Accessories 74

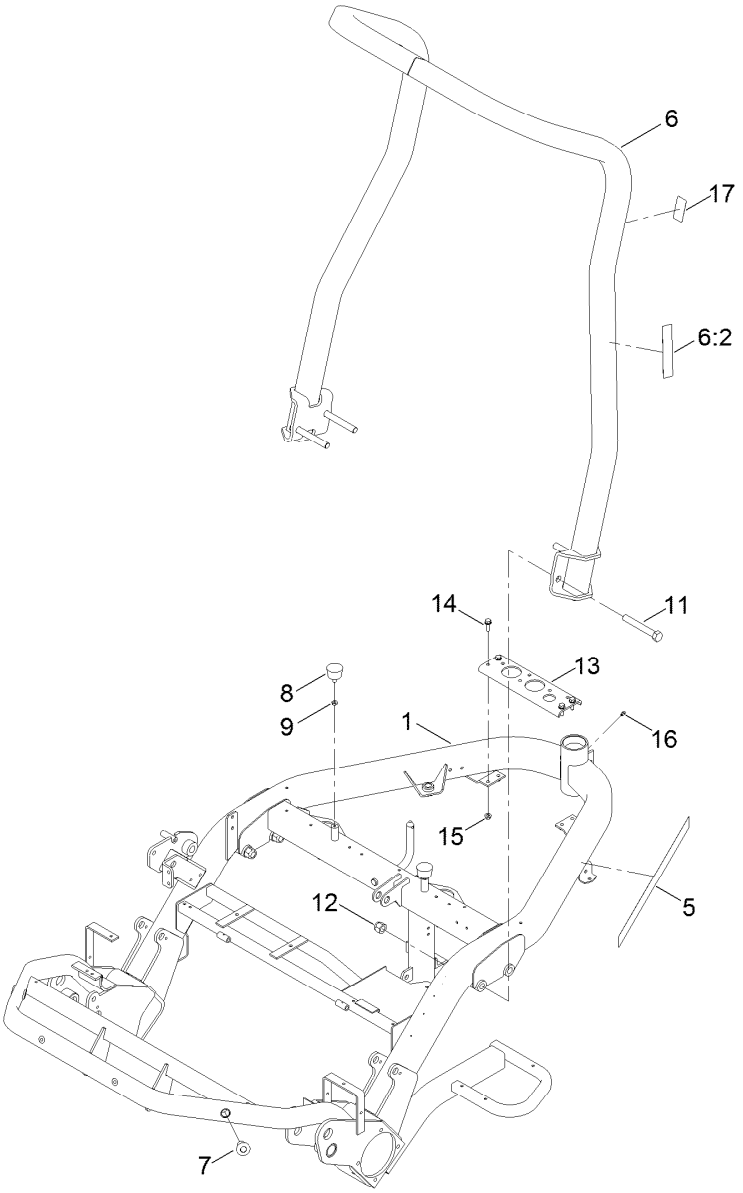

Roll-Over Protection System Assembly

Ref.	*Part Number*	*Qty.*	*Description*
1	127-6145-01	1	Frame
5	99-1493	1	Decal
6	125-5158	1	ROPS ASM
6:2	115-8226	1	Decal-ROPS
7	83-1700	3	Bushing-Flange
8	68-3270	2	Bumper-Rubber
9	3218-2	2	Nut-Hex Jam
11	327-23	4	Screw-HH
12	3296-53	4	Nut-Lock, NI
13	93-2020-01	1	Bracket-Support
14	3234-29	4	Screw-HHF
15	104-8300	4	Nut-HF, NI
16	302-5	1	Fitting-Grease
17	133-2311	1	Decal-ROPS

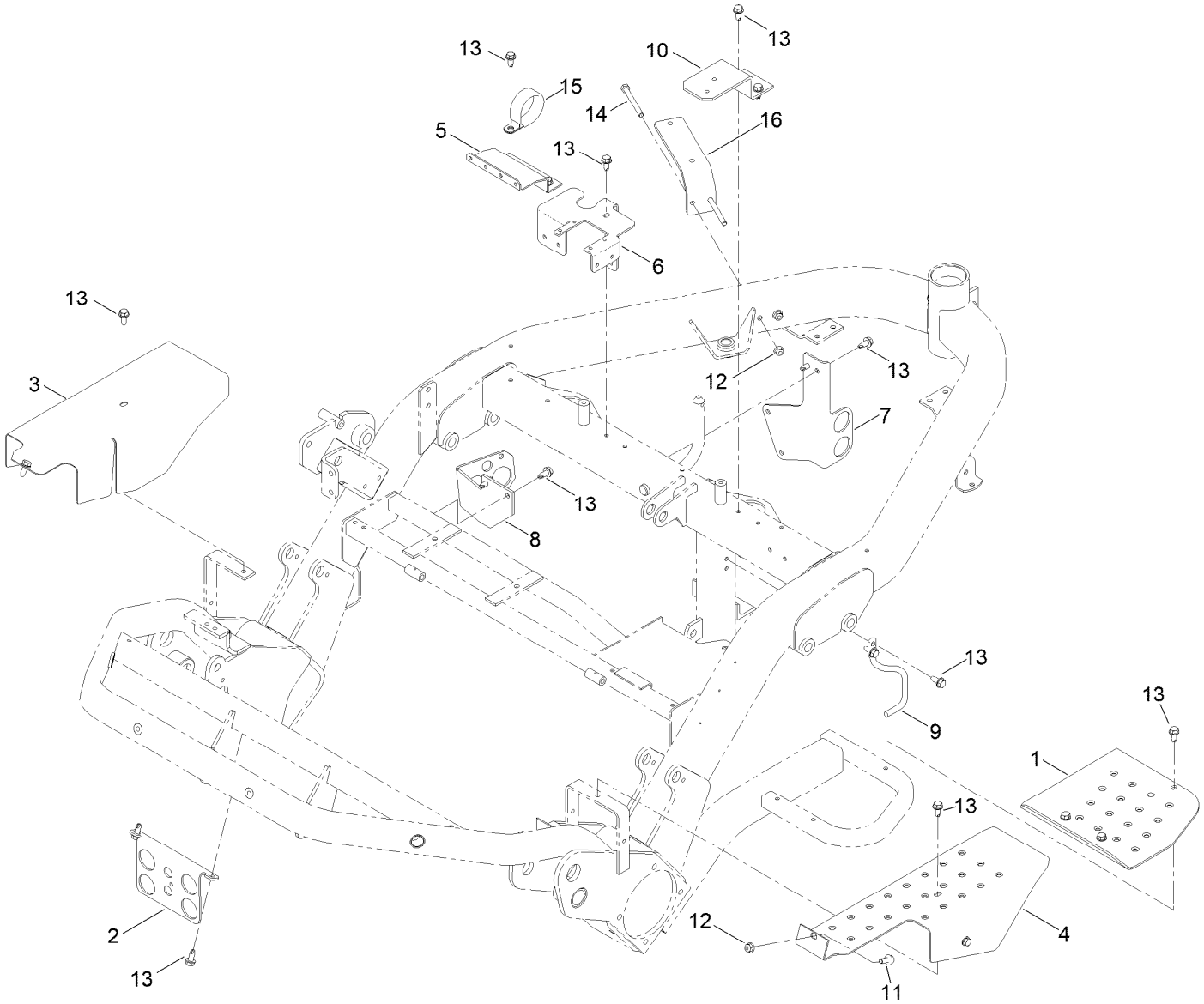

Frame Assembly

Ref.	Part Number	Qty.	Description
1	130-0104-01	1	Step
2	121-2636-01	1	Bracket-Bulkhead
3	93-2072-01	1	Shield-Wheel, RH
4	93-2073-01	1	Shield-Wheel, LH
5	93-2169-01	1	Bracket-Relay
6	145-4560-01	1	Bracket-Fuse Block
7	99-4222-03	1	Bracket-Hose
8	94-1316	1	Bracket-Bulkhead

Ref.	Part Number	Qty.	Description
9	130-6527	1	Retainer-Hose
10	131-8780-03	1	Bracket-Oil Filter
11	3234-47	1	Screw-HHF
12	104-8300	3	Nut-HF, NI
13	32104-32	22	Screw-HWH
14	322-20	2	Screw-HH
15	115-9469	1	Clamp-R
16	99-4203-03	1	Bracket-Cleaner, Air

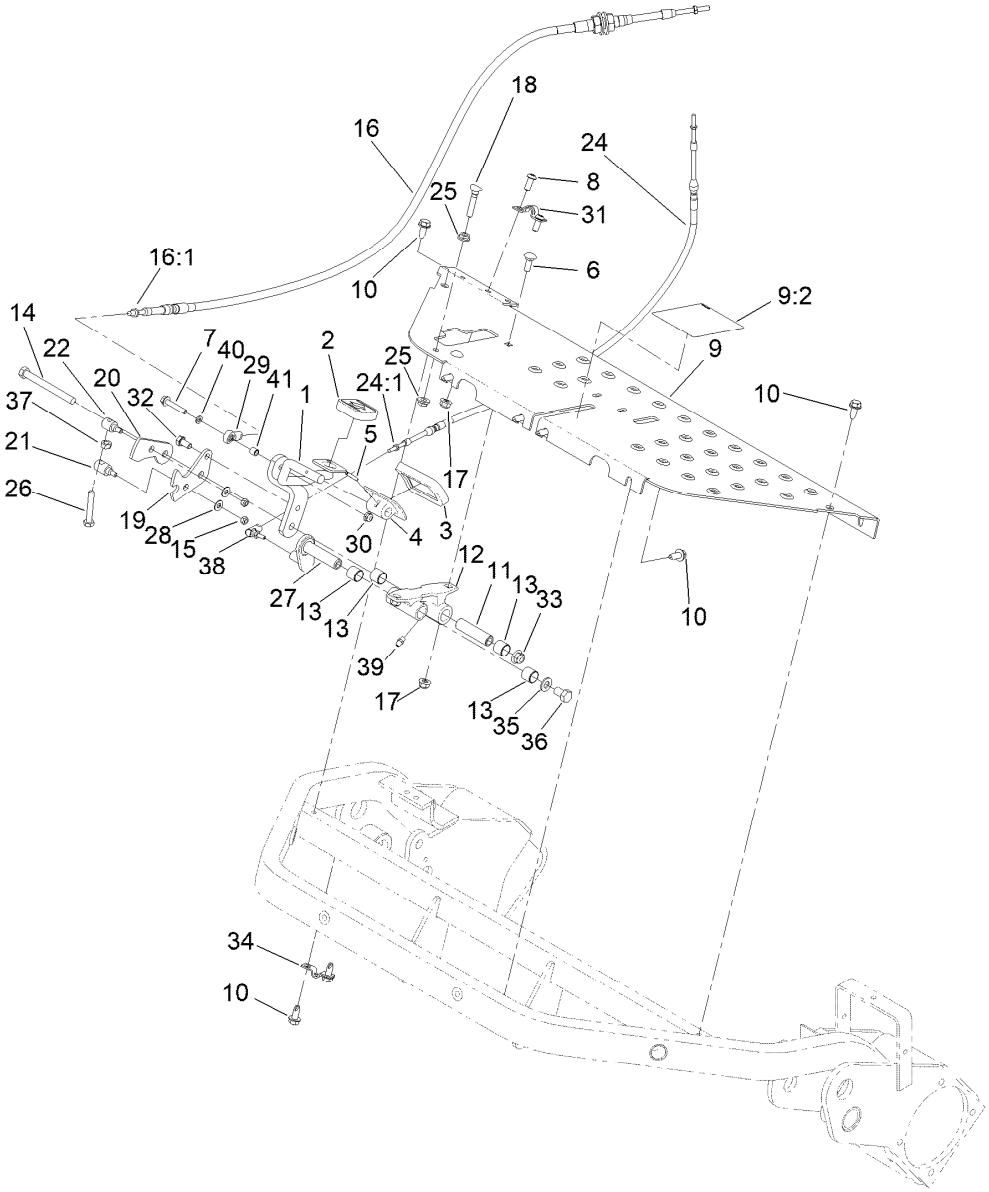

Traction Control Assembly

Ref.	Part Number	Qty.	Description
1	93-2085-01	1	Rod ASM
2	74-9110	1	Pad-Pedal, Reverse
3	74-9100	1	Pad-Pedal, Forward
4	117-9507	1	Pedal-Accelerator
5	32121-45	1	Pin-Spring
6	3230-16	2	Screw-CARR
7	94-5781	1	Screw-HHF
8	3274-55	2	Screw-HSBH
9	136-8570	1	Plate-Floor
9:2	93-8062	1	Decal-Brake, Parking
10	32104-32	8	Screw-HWH
11	94-1371	1	Spacer
12	115-6695	1	Pedal-Pivot
13	136-8417	4	Bushing
14	323-42	1	Screw-HH
15	33023-00	2	Nut-Lock
16	145-4566	1	Cable-Traction Control
16:1	3220-1	2	Nut-Jam
17	104-8300	4	Nut-HF, NI
18	17-9420	1	Screw-Handle
19	94-1373	1	Bracket-Lock

Ref.	Part Number	Qty.	Description
20	94-1372	1	Bracket-Mow
21	94-1375	1	Trunnion-Bracket, Lock
22	94-1374	1	Trunnion-Bracket, Mow
24	94-1304	1	Cable-Lock, Neutral
24:1	3219-14	2	Nut-Hex
25	32128-20	2	Nut-HF
26	94-3489	1	Screw-HH
27	140-6108	1	Pin-Flag, Neutral Lock
28	3256-1	2	Washer-Flat
29	2411-41	1	Rod End-Ball Joint
30	104-7201	1	Nut-HF, NI
31	93-2092	1	Clamp-Cable
32	33114-016	1	Screw-HH
33	104-8301	1	Nut-HF, NI
34	93-2279	1	Clamp-Cable
35	3256-24	1	Washer-Flat
36	33115-016	1	Screw-HH
37	33014-00	1	Nut-Hex
38	2411-38	1	Joint-Ball
39	302-5	1	Fitting-Grease

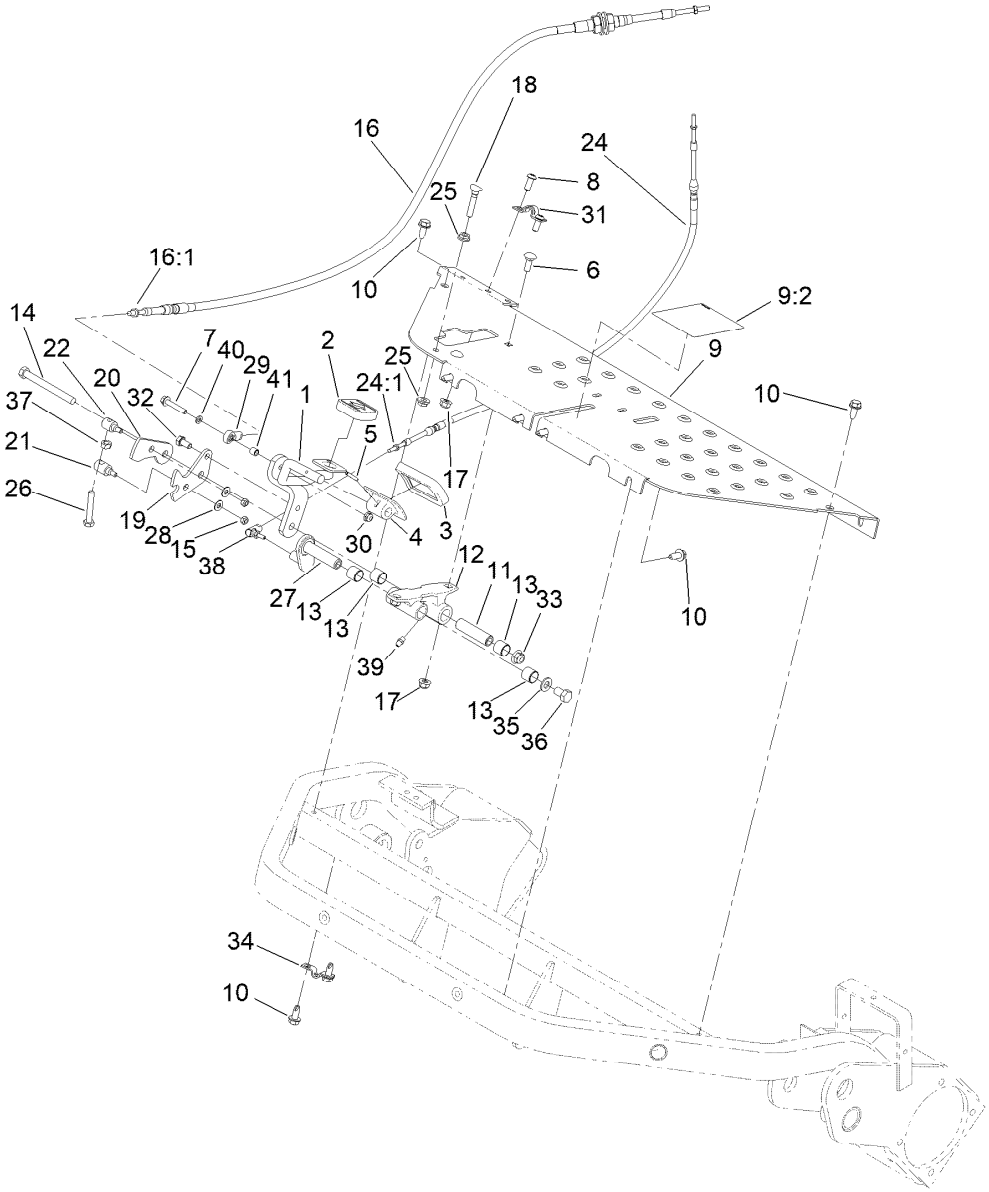

Traction Control Assembly (continued)

Ref.	*Part Number*	*Qty.*	*Description*
40	33093-00	1	Washer-Flat
41	99-3545	1	Spacer

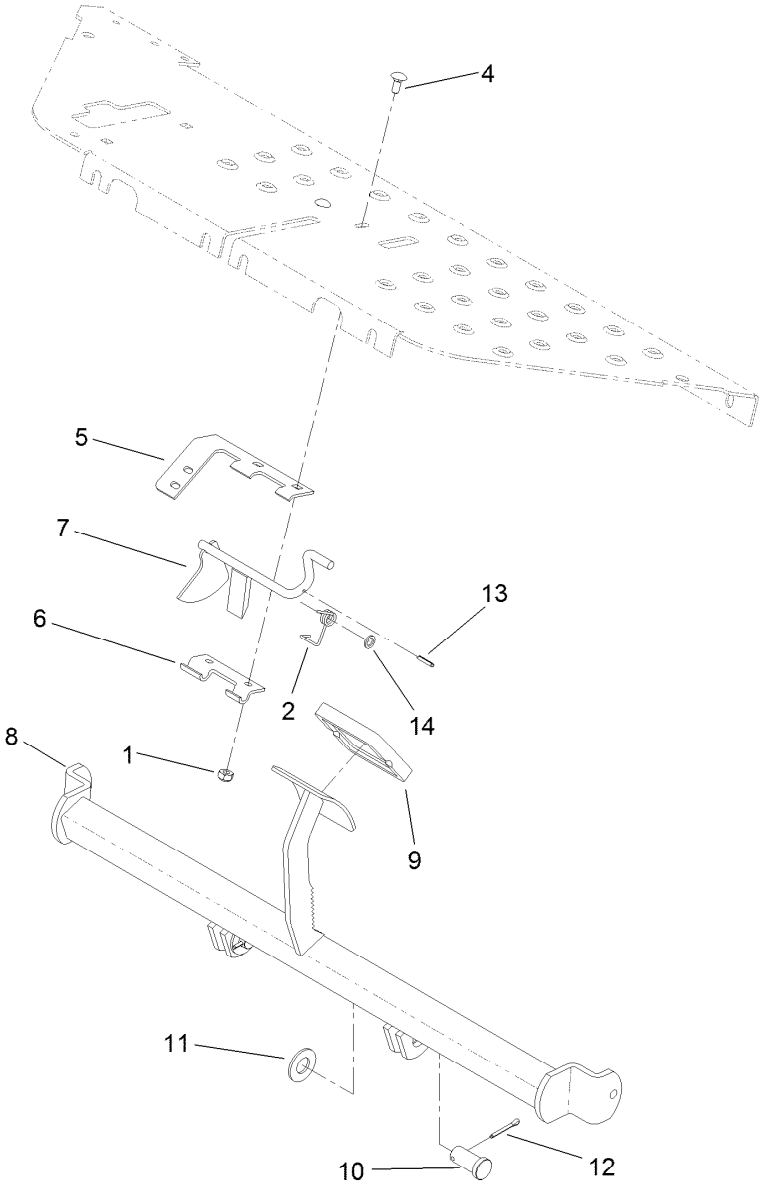

Brake Pedal Assembly

Ref.	Part Number	Qty.	Description
1	3296-16	2	Nut-Lock, NI
2	104-7704	1	Spring-Latch, Brake
4	3229-11	2	Screw-CARR
5	132-3807	1	Bracket-Switch
6	104-7703	1	Hinge-Lower
7	104-2094	1	Brake-Latch
8	93-2075-01	1	Brake Pedal ASM
9	93-7629	1	Pad-Foot, Brake
10	283-87	2	Pin-Clevis
11	3256-27	2	Washer-Flat
12	3272-11	2	Pin-Cotter
13	32121-50	1	Pin-Spring
14	75-5470	1	Spacer-Bearing

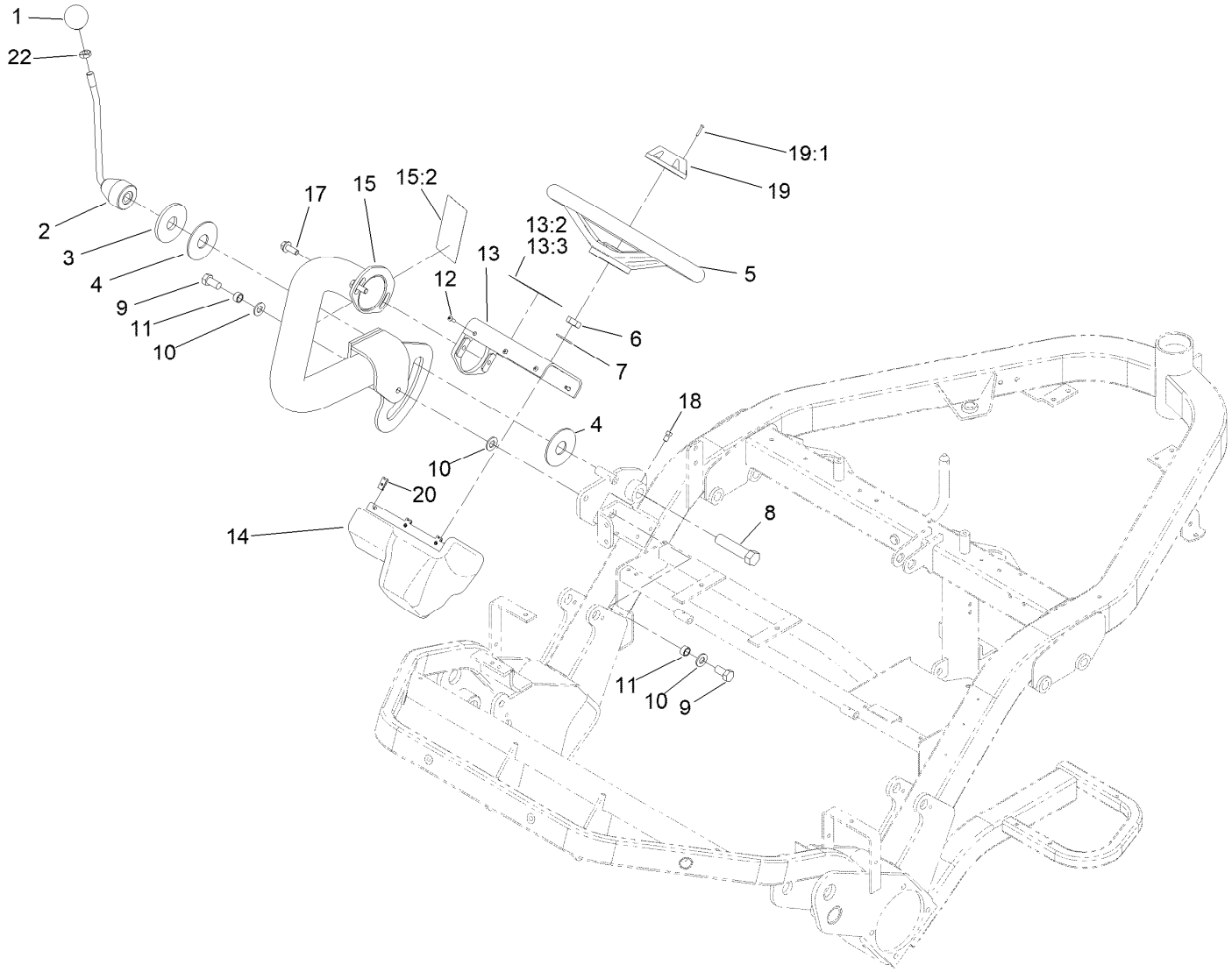

Steering Arm Assembly

Ref.	Part Number	Qty.	Description
1	233-48	1	Knob
2	93-2400-03	1	Lockup Handle ASM
3	83-0760	1	Spacer-Plate, Lockup
4	83-0740	2	Disc-Friction
5	145-0051	1	Steering Wheel
6	3296-33	1	Nut-Lock, NI
7	3256-27	1	Washer-Flat
8	93-2199	1	Screw-HH, RH
9	325-4	2	Screw-HH
10	3256-26	3	Washer-Flat
11	47-2890	2	Bushing
12	3274-39	6	Screw-HSBH

Ref.	Part Number	Qty.	Description
13	136-8571	1	Mount-Steering
13:2	136-8506	1	Decal-Danger
13:3	136-8505	1	Decal-Danger, CE
14	119-9300	1	Cover-Valve, Steering
15	136-8450	1	Arm-Steering
15:2	93-8068	1	Decal-Arm, Steering
17	3234-42	2	Screw-HHF
18	3242-2	1	Screw-SQH
19	68-5140	1	Cap-Wheel, Steering
19:1	32144-21	1	Screw
20	3290-277	6	Nut-Speed
22	3218-5	1	Nut-Jam

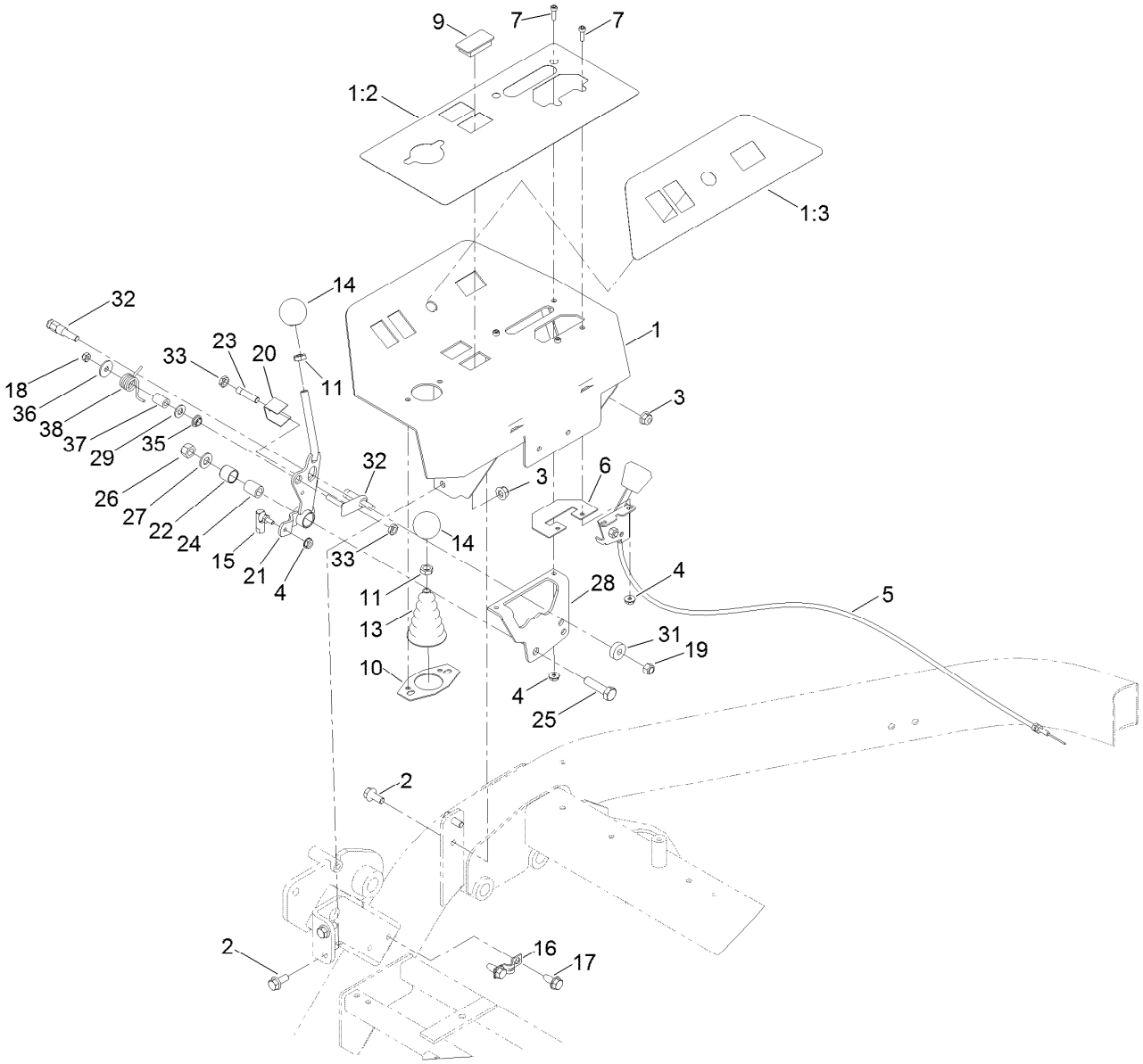

Operator Platform Assembly

Ref.	Part Number	Qty.	Description
1	136-8572	1	Console
1:2	127-6115	1	Decal-Panel, Instrument
1:3	127-6114	1	Decal-Panel, Instrument
2	3234-47	4	Screw-HHF
3	104-8300	4	Nut-HF, NI
4	32149-8	5	Nut-Keps
5	120-5261	1	Control-Throttle
6	112-9179	1	Plate-Cover
7	3273-26	4	Screw-HSH
9	99-7420	1	Plug-Hole
10	112-9181	1	Plate-Boot
11	3218-3	2	Nut-Jam
13	93-5961	1	Boot-Lever
14	233-42	2	Knob
15	2411-38	1	Joint-Ball
16	93-2279	1	Clamp-Cable
17	32104-32	2	Screw-HWH
18	33023-00	1	Nut-Lock

Ref.	Part Number	Qty.	Description
19	33024-00	1	Nut-Lock, NI
20	106-6356	1	Shield-Switch
21	140-6191	1	Handle Assembly
22	136-8417	1	Bushing
23	120-5348	1	Actuator-Switch
24	94-1378	1	Tube-Pivot, Handle
25	33115-040	1	Screw-HH
26	33025-00	1	Nut-Lock, NI
27	3256-24	1	Washer-Flat
28	94-6398	1	Bracket-Traction
29	3256-23	1	Washer-Plain
31	251-259	1	Bearing-Ball
32	125-1928	1	Pin
33	117-4059	2	Nut-Hex
35	94-9619	1	Bushing
36	3256-67	1	Washer
37	94-9618	1	Spacer-Spring
38	94-9620	1	Spring-Torsion

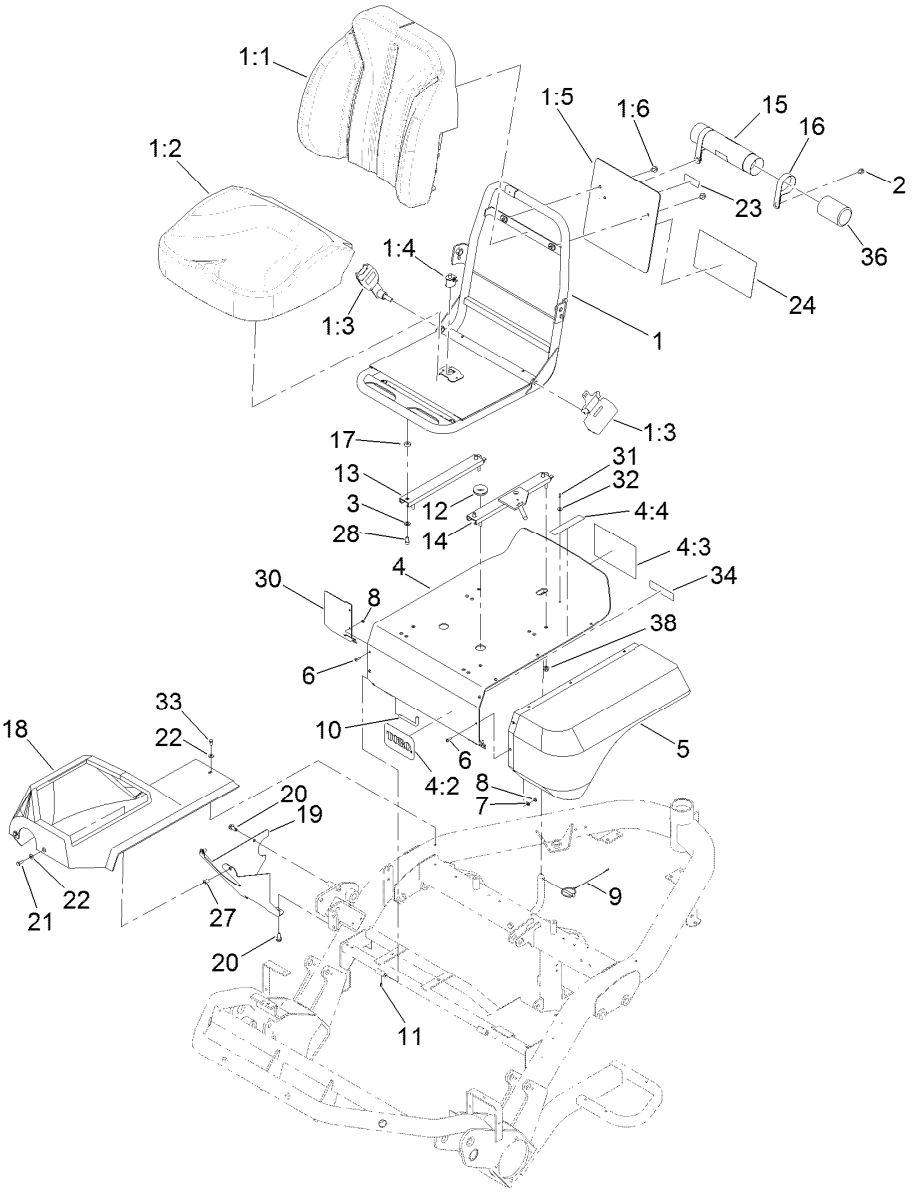

Seat Assembly

Ref.	Part Number	Qty.	Description
1	139-2680	1	Seat ASM
1:1	145-0083	1	Cover-Seat, Back
1:2	145-0084	1	Cover-Seat, Bottom
1:3	139-2707	1	Seat Belt Kit
1:4	82-2190	1	Switch-Bail
1:5	139-2701	1	Plate-Decal
1:6	3234-30	2	Screw-HHF
2	32104-82	2	Screw-HHF
3	3256-23	4	Washer-Plain
4	136-8573	1	Seat Support ASM
4:2	94-2579	1	Decal
4:3	115-8156	1	Decal-Speed, Clip
4:4	93-6689	1	Decal-No Riders
5	93-2128	1	Panel-Base, Seat
6	3274-39	9	Screw-HSBH
7	3256-77	6	Washer-Flat
8	3296-12	9	Nut-Lock, NI
9	77-3780	1	Pin ASM-Lynch
10	93-2422	2	Rod-Pivot, Seat
11	32121-7	2	Pin-Roll, Slotted
12	237-100	1	Grommet

Ref.	Part Number	Qty.	Description
13	92-8990	1	Adjuster-Seat, Non-Locking
14	92-8991	1	Adjuster (W/Latch)
15	104-7050	1	Tube-Manual
16	2412-133	2	Clamp-R
17	121-1759	4	Spacer
18	99-4208	1	Shroud-Console
19	94-4547-03	1	Panel-Lower, RH
20	32104-32	2	Screw-HWH
21	33113-016	2	Screw-HH
22	3256-1	3	Washer-Flat
23	93-6686	1	Decal-Oil, HYD
24	121-9501	1	Decal-Service, Spanish
24	121-9502	1	Decal-Service, French
24	121-9503	1	Decal-Service, German
24	121-9504	1	Decal-Service, Swedish
24	121-9505	1	Decal-Service, Italian
24	121-9506	1	Decal-Service, Portuguese
24	121-9507	1	Decal-Service, Norwegian
24	121-9508	1	Decal-Service, Finnish
24	121-9509	1	Decal-Service, Danish
24	121-9510	1	Decal-Service, Dutch

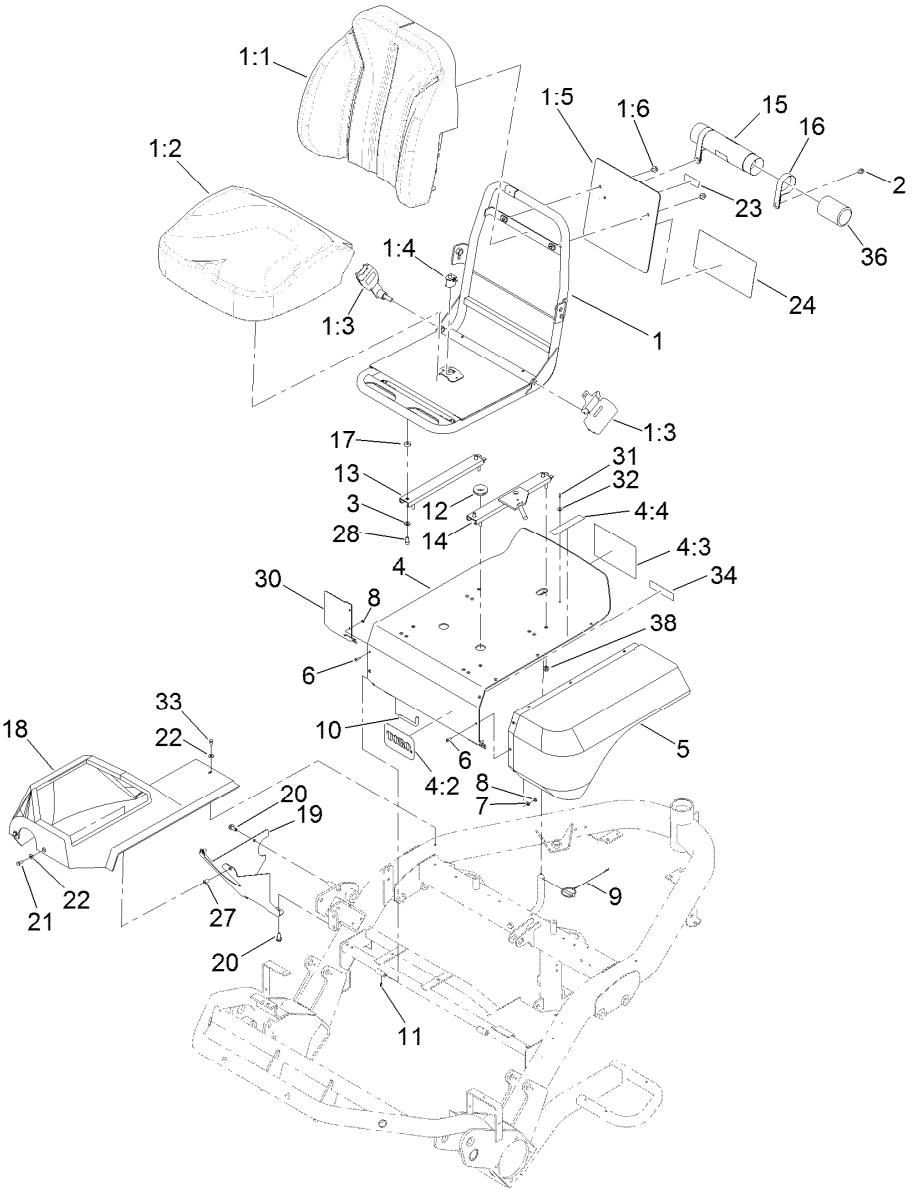

Seat Assembly (continued)

Ref.	Part Number	Qty.	Description
24	121-9511	1	Decal-Service, Japanese
24	139-2726	1	Decal-Service, GR3250
27	93-5447	2	Nut-Clinch
28	3274-22	4	Screw-HSH
30	94-4546-03	1	Panel-Extension
31	3290-282	1	Rivet-Blind
32	3256-49	1	Washer-Plain
33	33113-012	1	Screw-HH
34	133-8062	1	Decal-Arrestor, Spark
36	104-7048	1	Cap-Housing
38	104-8300	4	Nut-HF, NI

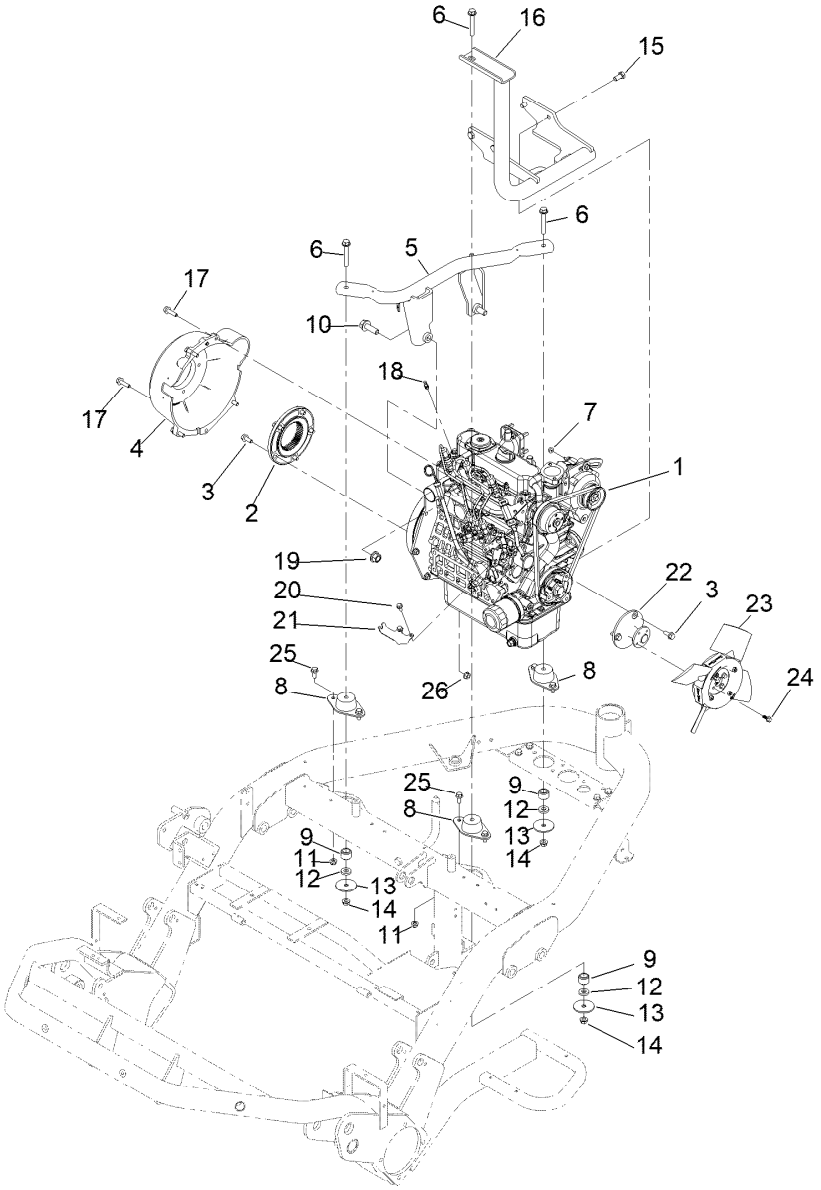

Engine Assembly

Ref.	Part Number	Qty.	Description
1	138-6903	1	Engine-Kubota, D902
2	115-8727	1	Flange-Coupling
3	33104-020	8	Screw-HHF
4	132-6994	1	Housing-Bell
5	120-5313-03	1	Mount-Engine
6	3234-39	3	Screw-HHF
7	33003-00	1	Nut-HF
8	121-9076	3	Mount-Engine
9	94-4538	3	Spacer-Mount
10	100-6116	2	Screw-HHF
11	104-8300	6	Nut-HF, NI
12	66-6480	3	Washer
13	83-1040	3	Washer-Flat

Ref.	Part Number	Qty.	Description
14	3290-357	3	Nut-HSF
15	63-7790	4	Screw-Cap
16	133-2346-03	1	Support-Engine
17	33104-030	5	Screw-HHF
18	108-5928	1	Swivel-Stop, Cable
19	99-5107	2	Nut-Lock
20	33103-016	2	Screw-HHF
21	120-5316	1	Bracket-Support, Throttle
22	119-4421	1	Adaptor-Fan
23	120-5287	1	Fan-35 DEG
24	99-6810	4	Screw-HHF
25	3234-47	6	Screw-HHF
26	33004-00	1	Nut-HF

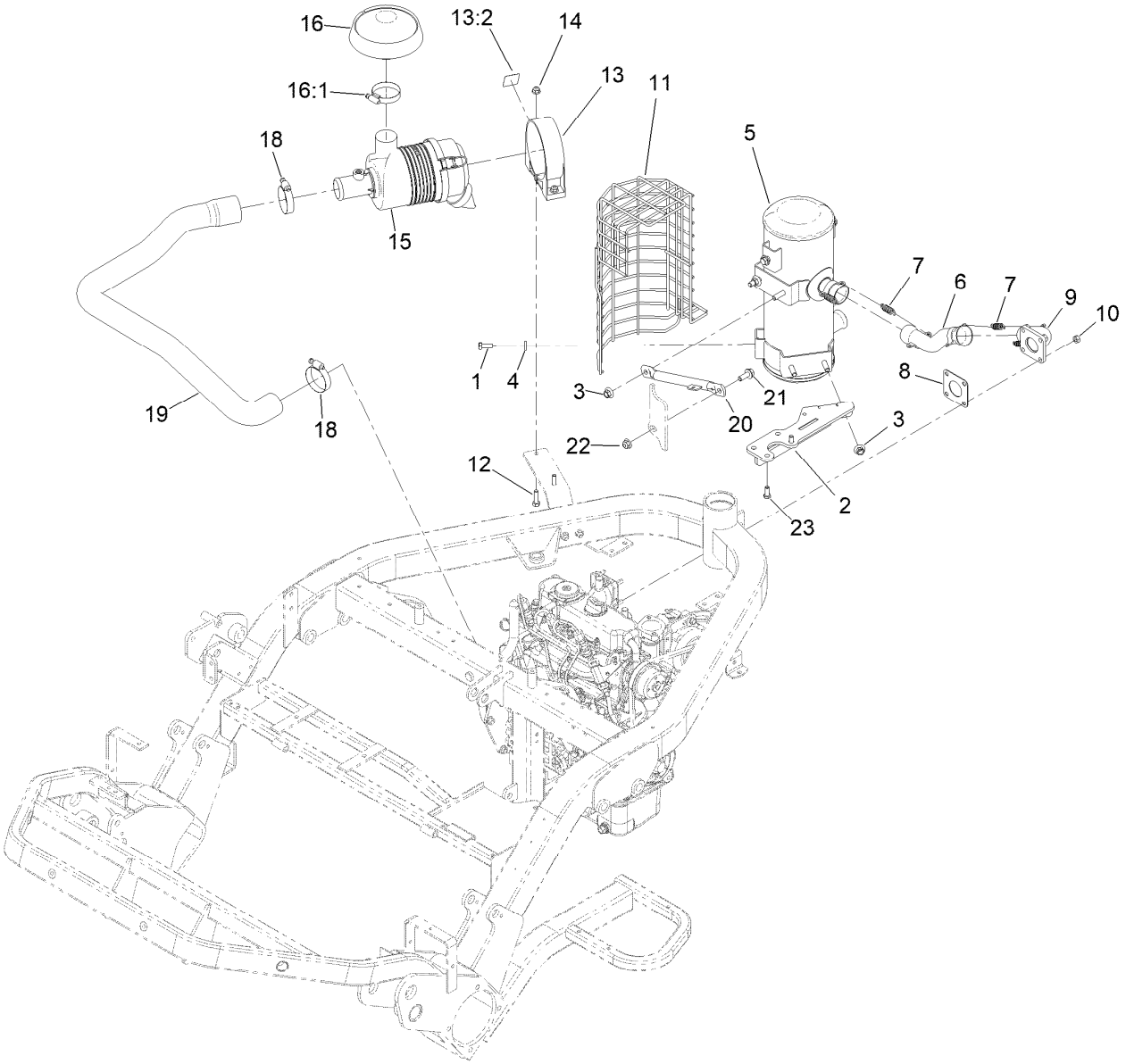

Intake and Exhaust Assembly

Ref.	Part Number	Qty.	Description
1	323-5	4	Screw-HH
2	140-5219-03	1	Bracket-Support, Muffler [black
3	32128-19	4	Nut-HF Lock,Large Flg
4	100-4852	4	Washer-Hardened
5	120-1950	1	Muffler
6	114-8013	1	Pipe-Exhaust
7	104-6478	4	Spring-Extension
8	99-8343	1	Gasket-Muffler
9	114-8009	1	Plate-Exhaust
10	33014-00	4	Nut-Hex
11	145-4559-03	1	Shield-Muffler
12	322-16	2	Screw-HH

Ref.	Part Number	Qty.	Description
13	136-8574	1	Bracket-Air Cleaner
13:2	115-8155	1	Decal-Warning
14	104-8300	2	Nut-HF, NI
15	95-5805	1	Air Cleaner ASM
16	136-7859	1	Rain Cap Kit
16:1	1-643009	1	Clamp-Hose
18	2412-92	2	Clamp-Hose
19	119-3536	1	Hose-Air Cleaner
20	120-5317-03	1	Tube-Brace
21	3234-42	1	Screw-HHF
22	104-8301	1	Nut-HF, NI
23	33114-020	2	Screw-HH

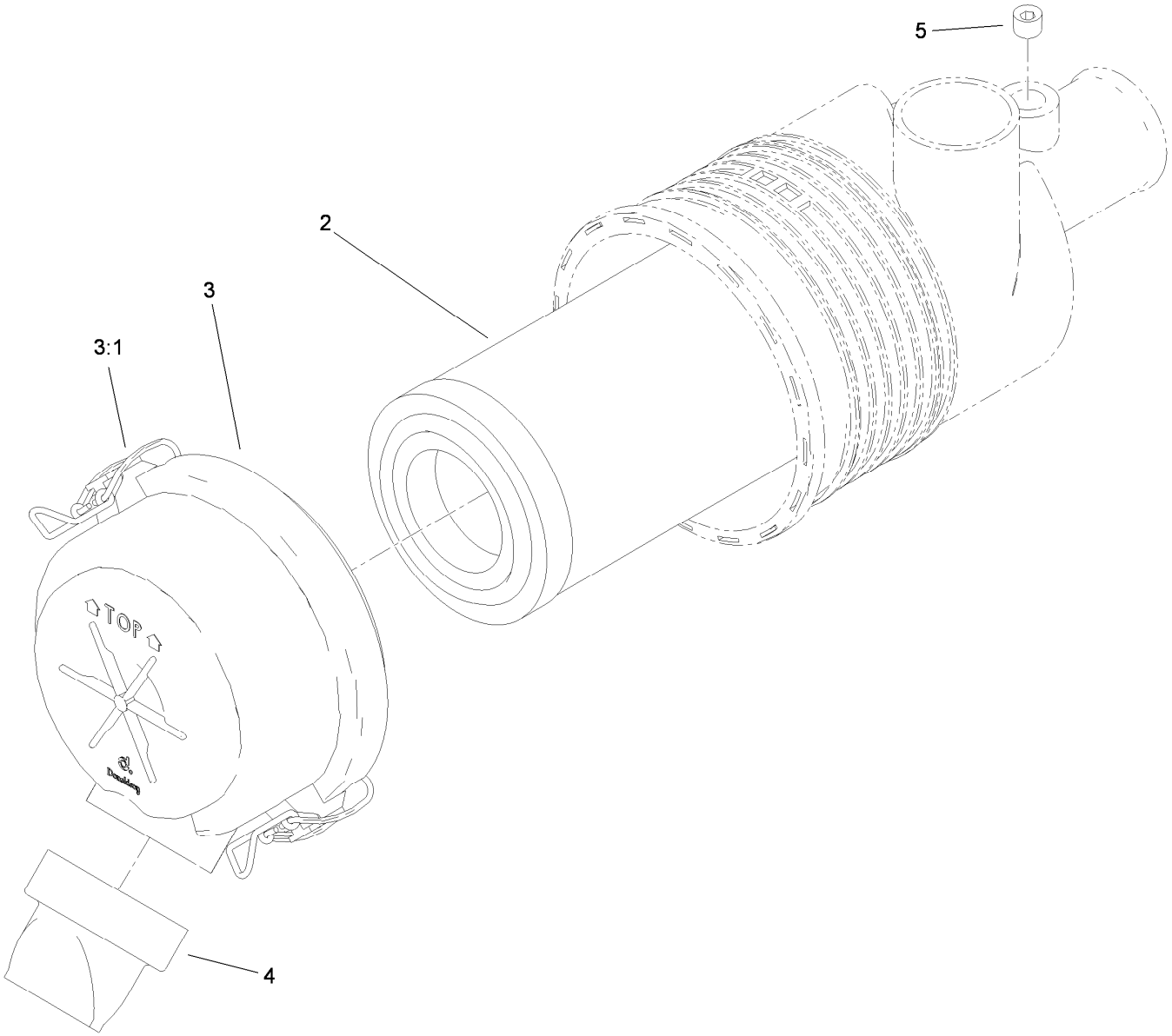

Air Cleaner Assembly No. 95-5805

Ref.	*Part Number*	*Qty.*	*Description*
2	108-3811	1	Filter-Air
3	94-3652	1	Cover ASM
3:1	1-643283	2	Latch-Cleaner, Air
4	87-9400	1	Valve-Vacuator
5	285-17	1	Plug-Pipe

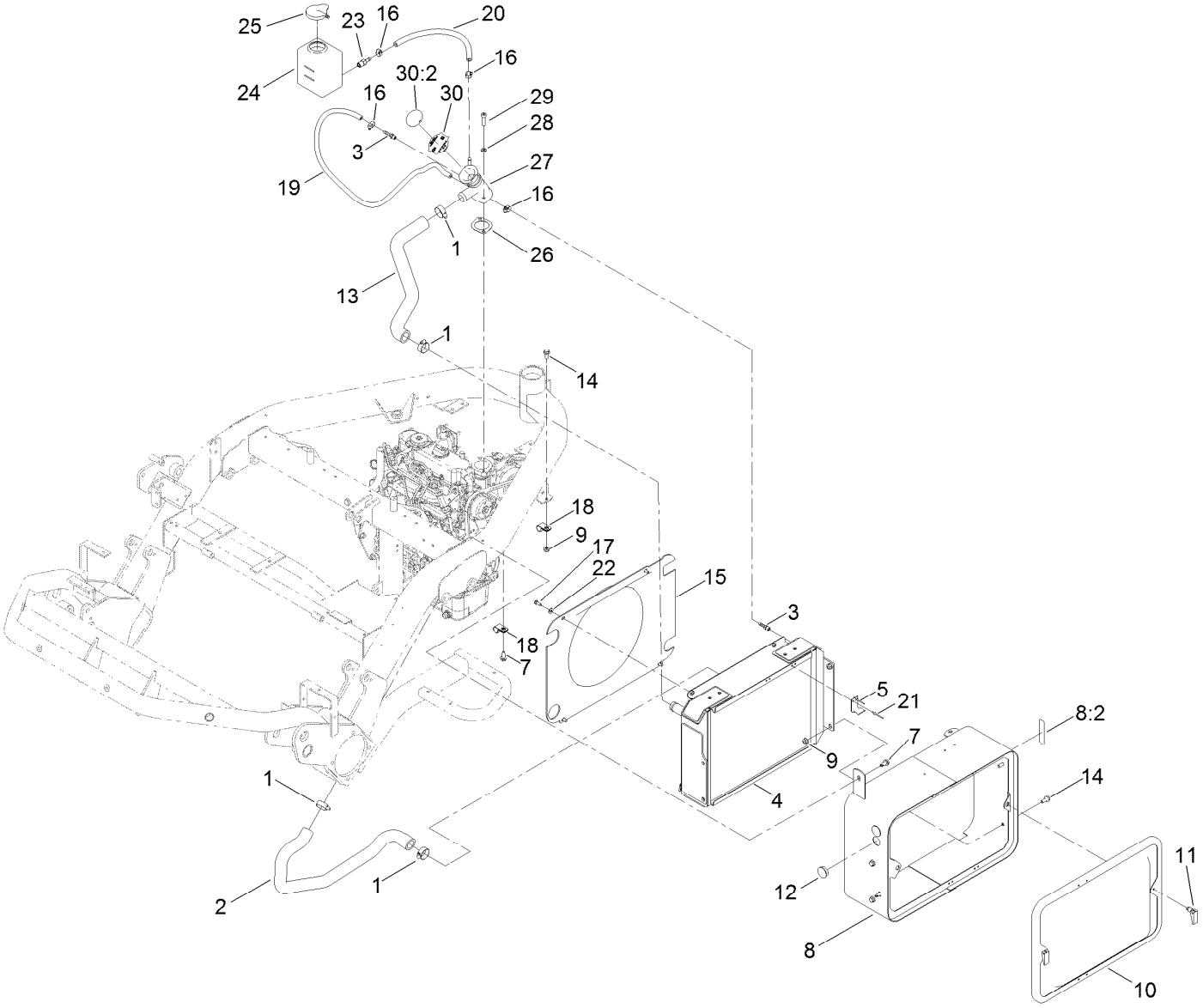

Radiator Assembly

Ref.	Part Number	Qty.	Description
1	2412-34	4	Clamp-Hose
2	119-3554	1	Hose-Radiator, Lower
3	304-73	2	Fitting-Straight
4	145-4583	1	Radiator
5	104-7736	1	Bracket-Cooler, Upper
7	32104-32	3	Screw-HWH
8	136-8575	1	Radiator-Support
8:2	93-6681	1	Decal-Warning, Fan
9	104-8300	5	Nut-HF, NI
10	100-3172-03	1	Screen ASM
11	74-5950	2	Latch-Swell
12	94-4528	2	Plug
13	119-3556	1	Hose-Radiator, Upper
14	3234-47	5	Screw-HHF
15	119-3571	1	Shroud-Fan
16	2412-108	4	Clamp-Worm

Ref.	Part Number	Qty.	Description
17	33113-016	4	Screw-HH
18	2412-41	2	Clamp-R
19	109-0286	1	Hose-Fuel
20	110-4101	1	Hose-Fuel
21	130-6520	2	Rivet-Pop
22	3256-22	4	Washer-Flat
23	353-783	1	Fitting-STR
24	120-5260	1	Tank-Overflow
25	1-643164	1	Cap-Tank, Overflow
26	105-3748	1	Gasket-Thermostat
27	119-3532	1	Blade (Discontinued)
28	3253-4	2	Washer-Lock
29	94-3559	2	Screw-HSH
30	136-8582	1	Cap-Radiator
30:2	106-5976	1	Decal-Warning

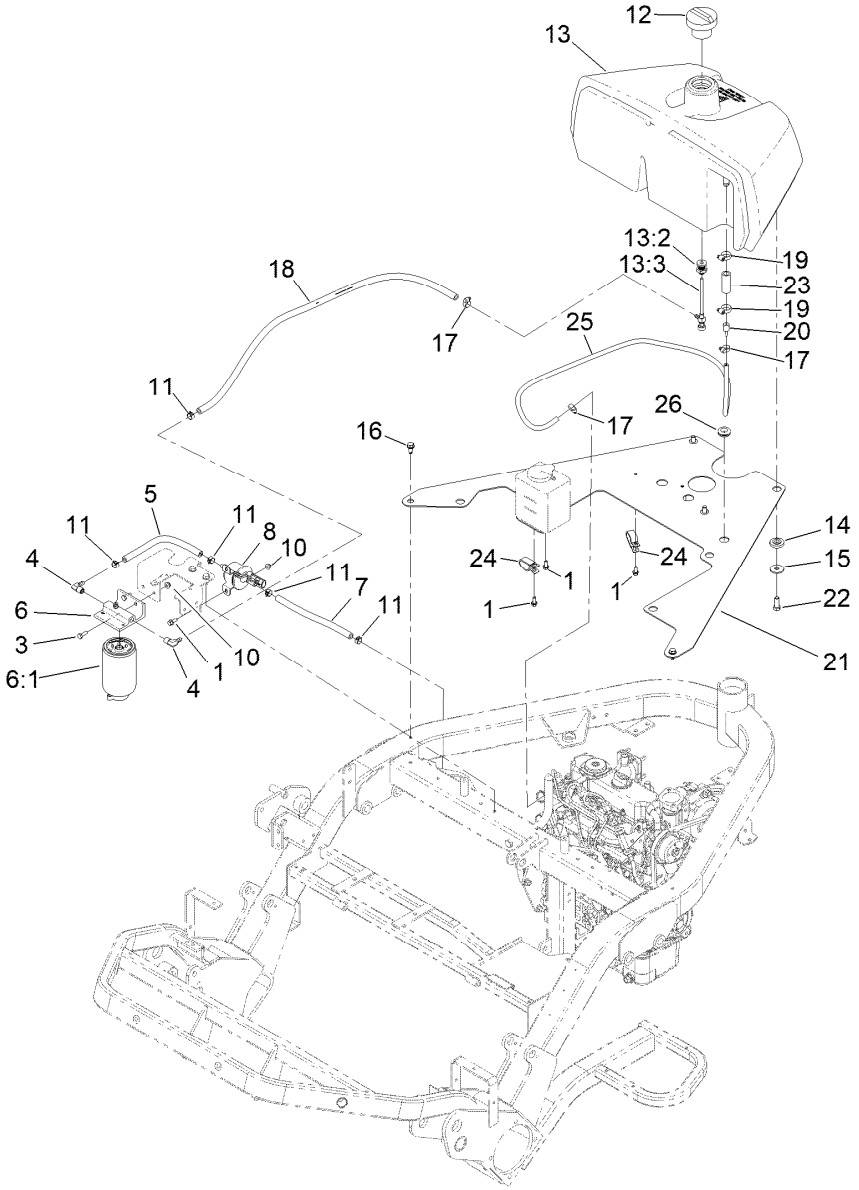

Fuel System Assembly

Ref.	Part Number	Qty.	Description
1	3234-33	5	Screw-HHF
3	321-4	2	Screw-HH
4	353-781	2	Fitting-HYD, 90
5	145-4571	1	Hose-Fuel (.313 X 12.00, J30R7, LP)
6	110-9044	1	Separator-Filter
6:1	110-9049	1	Filter-Spin On, Fuel/Water
7	145-4570	1	Hose-Fuel (.313 X 8.50, J30R7, LP)
8	145-3154	1	Pump-Fuel, Electric
10	104-7201	4	Nut-HF, NI
11	92-2379	5	Clamp-Hose
12	115-5305	1	Cap-Fuel
13	132-3801	1	Tank ASM
13:2	114-4677	1	Bulkhead ASM

Ref.	Part Number	Qty.	Description
13:3	114-4679	1	Fitting-Shut Off, Fuel
14	240-11	3	Bushing-Flange
15	63-8410	3	Washer
16	32104-32	3	Screw-HWH
17	2412-108	3	Clamp-Worm
18	145-4572	1	Hose-Fuel
19	2412-36	2	Clamp-Hose
20	112-0212	1	Fitting-Fuel
21	119-3531-01	1	Plate
22	323-6	3	Screw-HH
23	106-1128	1	Hose-Fuel
24	92-5753	2	Clamp-Hose
25	117-6395	1	Hose-Vent, Tank
26	237-124	1	Grommet

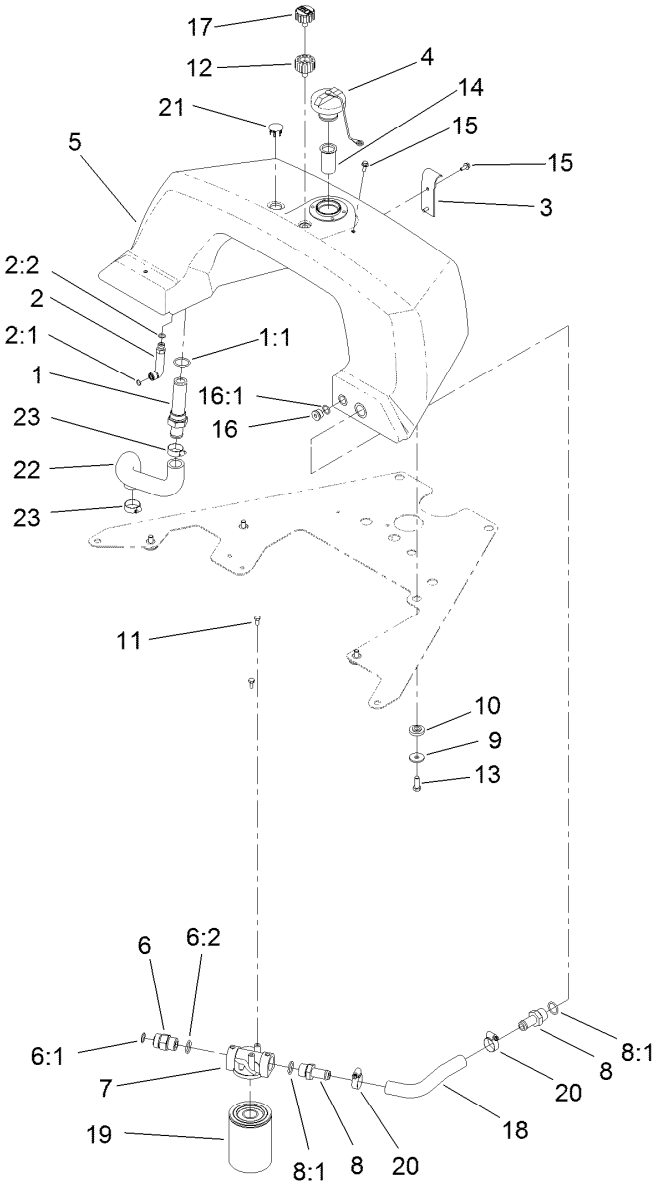

Hydraulic Tank and Filter Assembly

Ref.	Part Number	Qty.	Description
1	112-0211	1	Strainer Fitting ASM
1:1	237-146	1	O-Ring
2	340-87	1	Fitting-Elbow, 45 DEG
2:1	237-22	1	O-Ring
2:2	237-42	1	O-Ring
3	93-2438	1	Clamp-Tank, Fuel
4	93-7160	1	Cap-Oil, HYD
5	132-3799	1	Tank-Hydraulic
6	340-9	1	Fitting-STR
6:1	237-58	1	O-Ring
6:2	237-81	1	O-Ring
7	92-5821	1	Head-Filter
8	354-73	2	Fitting
8:1	237-81	1	O-Ring
9	63-8410	4	Washer

Ref.	Part Number	Qty.	Description
10	240-11	4	Bushing-Flange
11	321-3	2	Screw-HH
12	92-8020	1	Adapter-Breather
13	323-6	4	Screw-HH
14	93-2275	1	Screen-Filler
15	33103-016	3	Screw-HHF
16	353-988	1	Plug-Hex
16:1	237-79	1	O-Ring ●
17	68-6150	1	Breather
18	94-9607	1	Hose-Return
19	107-9531	1	Filter-Oil, HYD
20	2412-129	2	Clamp-Hose
21	93-2437	1	Plug-Serrated
22	140-5225	1	Hose-Inlet, Pump
23	2412-34	2	Clamp-Hose

● Not illustrated

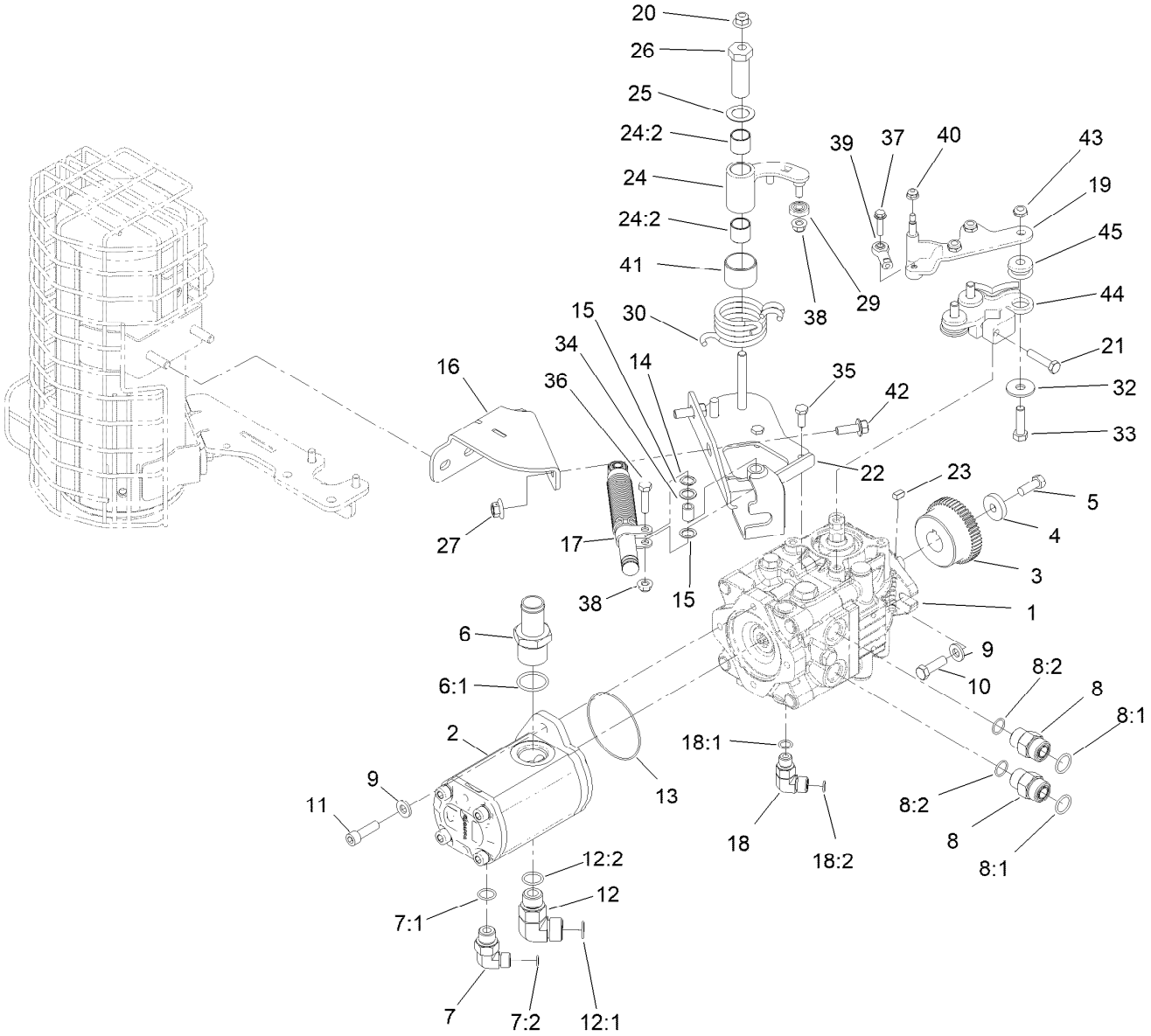

Hydrostat and Gear Pump Drive Assembly

Ref.	Part Number	Qty.	Description
1	139-6474	1	Pump-Hydro, Danfoss
2	114-9956	1	HYD Gear Pump ASM
3	119-4418	1	Coupling
4	138-8594	1	Spacer
5	3211-4	1	Screw-HH
6	354-78	1	Fitting-STR
6:1	237-146	1	O-Ring
7	340-18	1	Fitting-HYD, 90 DEG
7:1	237-79	1	O-Ring
7:2	237-22	1	O-Ring
8	340-7	2	Fitting-Straight
8:1	237-65	1	O-Ring
8:2	237-80	1	O-Ring
9	100-4852	4	Washer-Hardened
10	323-7	2	Screw-HH
11	AU862-10030	2	Screw-HSH
12	340-17	1	Fitting-Elbow, 90 DEG
12:1	237-65	1	O-Ring
12:2	237-80	1	O-Ring
13	237-161	1	O-Ring
14	108473	1	Washer-Wave

Ref.	Part Number	Qty.	Description
15	94-8196	2	Washer-Nylon
16	140-5216-03	1	Bracket-Mount [black]
17	140-6248	1	Damper
18	340-77	1	Fitting-Elbow, 90 DEG
18:1	237-22	1	O-Ring
18:2	237-42	1	O-Ring
19	140-5221	1	Lever-Hydro
20	104-8301	1	Nut-HF, NI
21	120-2779	1	Screw-HH
22	140-5211-03	1	Bracket-Cable, Hydro [black]
23	145-4589	1	Key-Squ
24	145-0071	1	Neutral Arm ASM
24:2	94-9609	2	Bushing-Straight
25	119-8199	1	Washer-Nylon
26	117-9046	1	Stud-Eccentric
27	32128-19	2	Nut-HF Lock,Large Flg
29	251-259	1	Bearing-Ball
30	117-9047	1	Spring-Torsion
32	93-8806	3	Washer-Hardened
33	323-29	3	Screw-HH

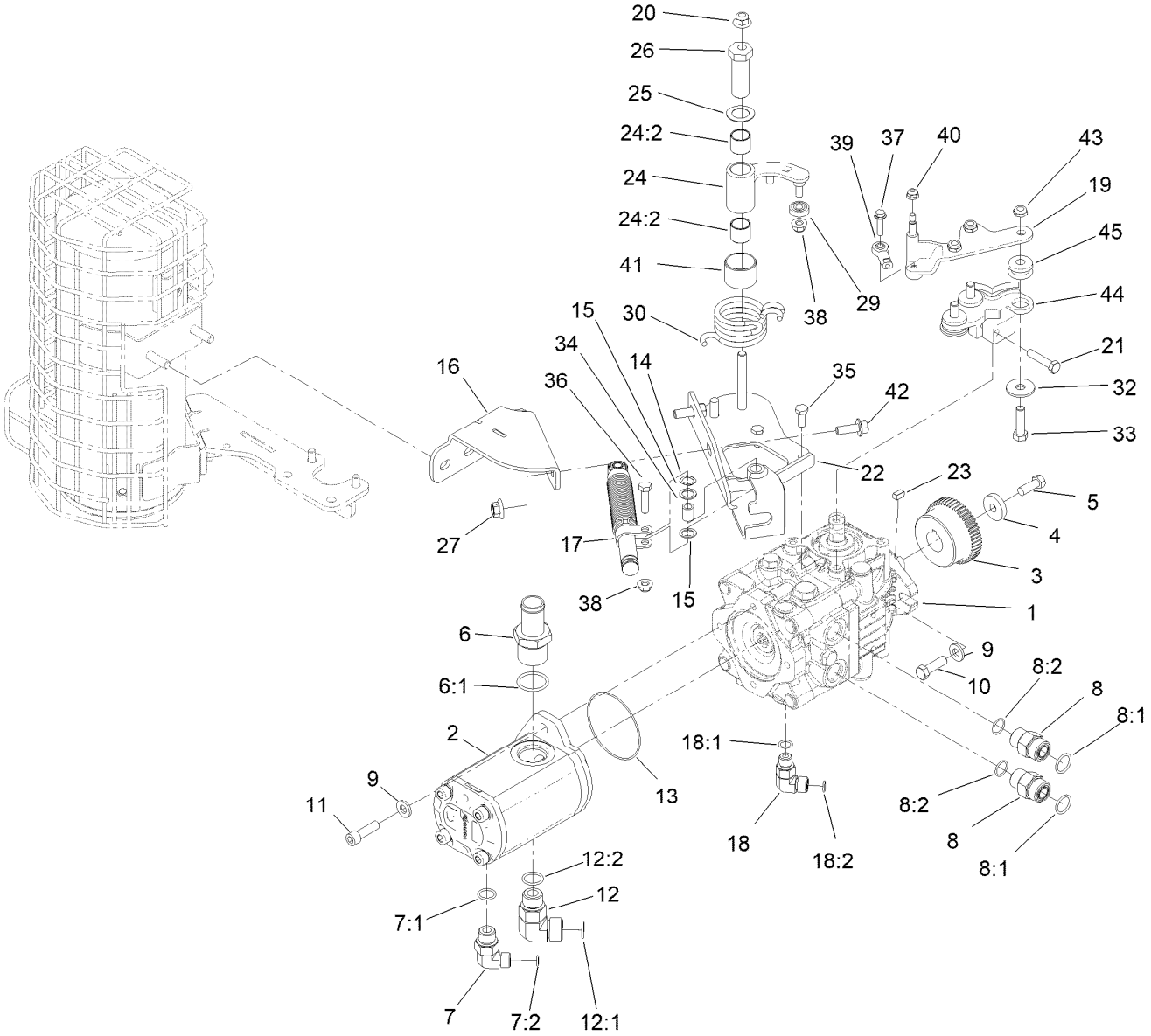

Hydrostat and Gear Pump Drive Assembly (continued)

Ref.	Part Number	Qty.	Description
34	94-8197	1	Tube-Pivot
35	33114-020	2	Screw-HH
36	322-6	1	Screw-HH
37	119-1066	1	Screw-HF
38	104-8300	2	Nut-HF, NI
39	2411-41	1	Rod End-Ball Joint

Ref.	Part Number	Qty.	Description
40	104-7201	1	Nut-HF, NI
41	136-8418	1	Bushing
42	139-2597	2	Screw-HHF
43	3296-59	3	Nut-Lock, NI
44	140-5231	1	Cam-Neutral
45	63-9750	3	Mount

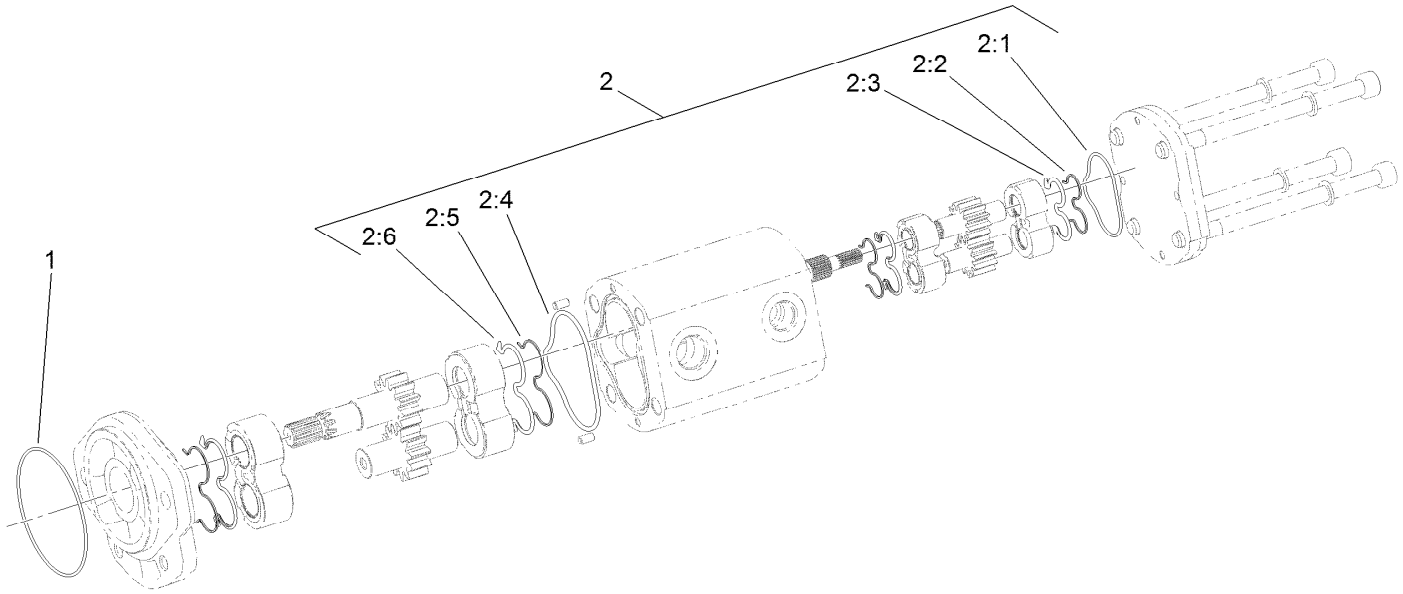

Hydraulic Gear Pump Assembly No. 114-9956

Ref.	*Part Number*	*Qty.*	*Description*
1	353-949	1	O-Ring
2	119-7134	1	Kit-Seal
2:1		1	O-Ring ●
2:2		2	Seal-Extrusion, Anti ●
2:3		2	Seal-Backup ●
2:4		1	O-Ring ●
2:5		2	Seal-Extrusion, Anti ●
2:6		2	Seal-Backup ●

● Not serviced separately

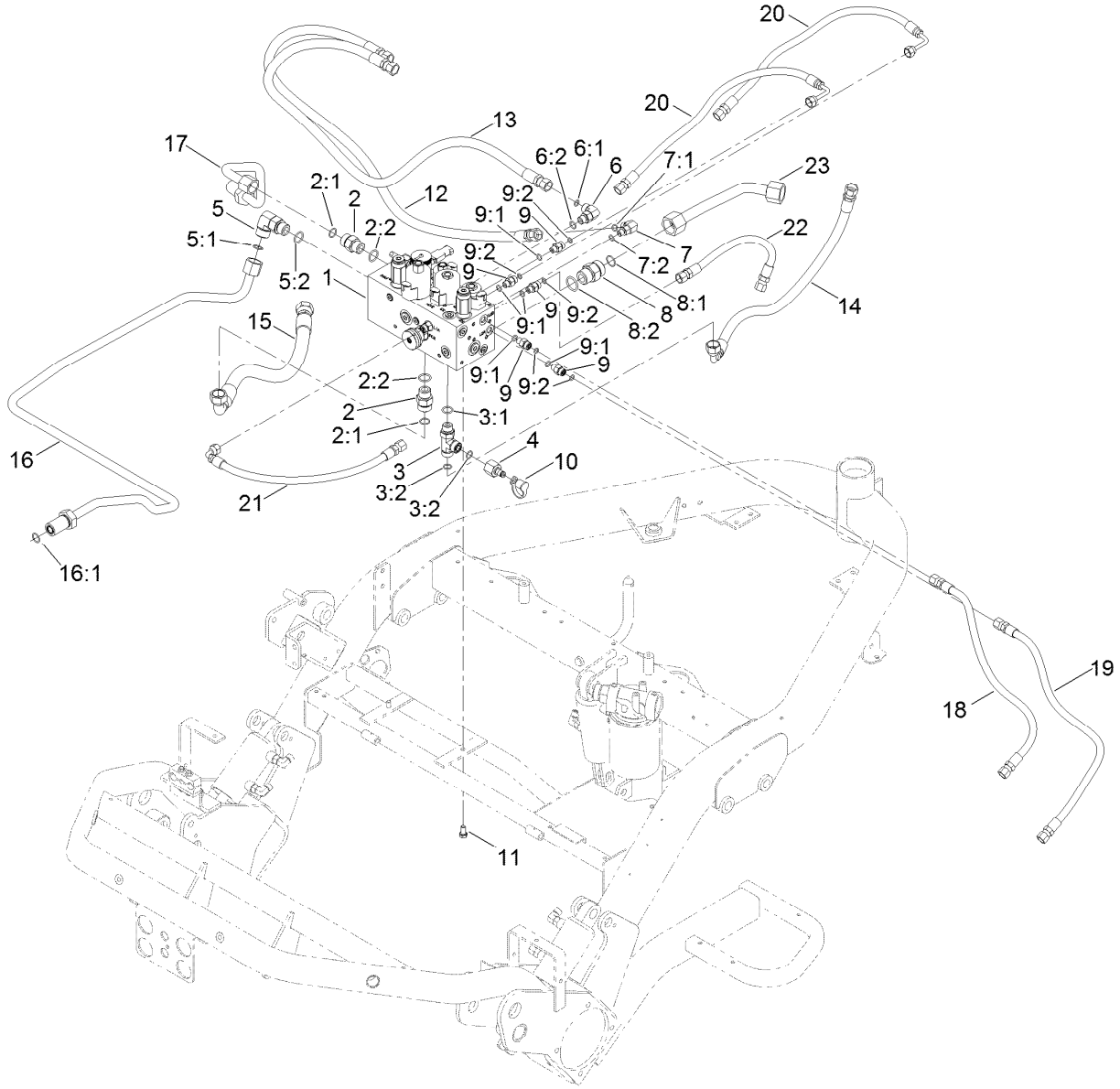

Manifold Assembly

Ref.	Part Number	Qty.	Description
1	147-3077	1	Block-Manifold
2	340-7	2	Fitting-Straight
2:1	237-65	1	O-Ring
2:2	237-80	1	O-Ring
3	340-109	1	Fitting-Tee
3:1	237-79	1	O-Ring
3:2	237-30	2	O-Ring
4	100-5616	1	Fitting
5	340-17	1	Fitting-Elbow, 90 DEG
5:1	237-65	1	O-Ring
5:2	237-80	1	O-Ring
6	340-77	1	Fitting-Elbow, 90 DEG
6:1	237-22	1	O-Ring
6:2	237-42	1	O-Ring
7	340-97	1	Fitting-Elbow, 90 DEG
7:1	237-22	1	O-Ring
7:2	237-78	1	O-Ring
8	340-9	1	Fitting-STR
8:1	237-58	1	O-Ring

Ref.	Part Number	Qty.	Description
8:2	237-81	1	O-Ring
9	340-92	5	Fitting-Straight
9:1	237-78	1	O-Ring
9:2	237-21	1	O-Ring
10	354-79	1	Cap-Dust
11	33114-016	2	Screw-HH
12	95-8842	1	Hose-HYD
13	105-9790	1	Hose ASM
14	140-5226	1	Hose ASM
15	131-6206	1	Hose ASM
16	94-1320	1	Tube-HYD
16:1	237-65	1	O-Ring
17	94-1317	1	Tube-HYD
18	131-2004	1	Hose ASM
19	131-2005	1	Hose ASM
20	131-2006	2	Hose ASM
21	112-9185	1	Hose ASM
22	106-7981	1	Hose-HYD
23	94-4518	1	Tube ASM

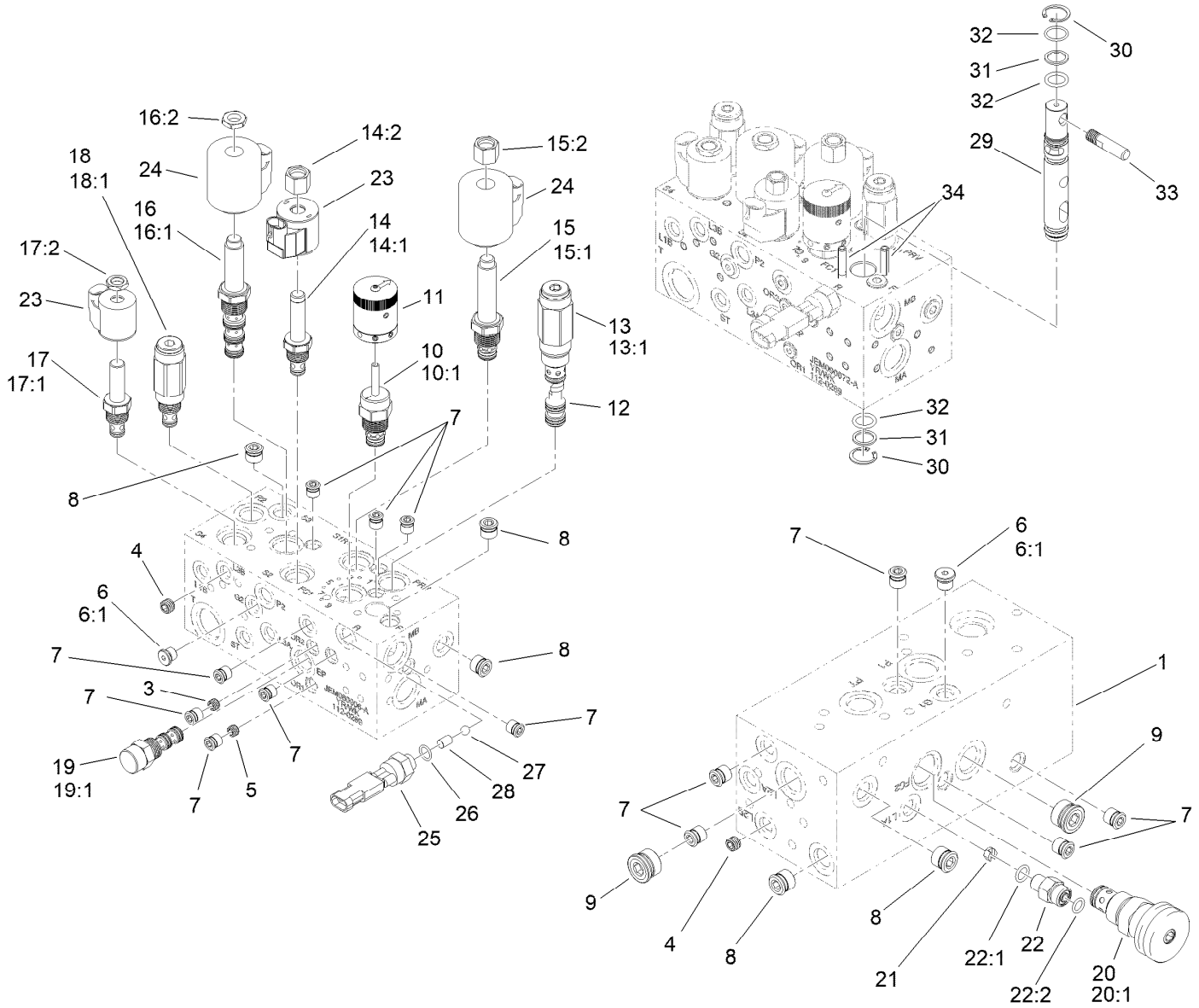

Hydraulic Manifold Assembly No. 147-3077

Ref.	Part Number	Qty.	Description
1		1	Body-Manifold ●
3	112-9202	1	Orifice-Flow, Control (.060)
4	110-8887	2	Plug-Orifice (0.055)
5	112-9203	1	Orifice-Control, Flow (.013)
6	353-990	2	Plug ASM
6:1	237-78	1	O-Ring
7	106-1025	13	Plug-HYD
8	106-1026	5	Plug-HYD
9	106-1027	2	Plug
10	147-3068	1	Valve-Control, Manual Flow
10:1	132-6231	1	Seal Kit
11	110-8767	1	Rotary Handle ASM
12	119-3506	1	Piston-Pilot
13	112-9205	1	Valve-Relief
13:1	105-9159	1	Seal Kit
14	107-7517	1	Valve-Solenoid
14:1	105-9156	1	Seal Kit
14:2	107-7812	1	Nut-Solenoid

Ref.	Part Number	Qty.	Description
15	110-8768	1	Valve-Relief, Solenoid (3000 PSI)
15:1	110-6316	1	Seal Kit
15:2	130-8180	1	Nut-Coil (9/16-24 Unef-2B)
16	110-8906	1	Valve-Solenoid
16:1	110-8908	1	Spool Valve Seal Kit
16:2	110-2634	1	Nut-Coil
17	112-9206	1	Solenoid Valve ASM
17:1	105-9156	1	Seal Kit
17:2	110-2634	1	Nut-Coil
18	133-8873	1	Valve-Relief
18:1	105-9156	1	Seal Kit
19	110-8988	1	Element-Logic
19:1	110-8773	1	Seal Kit
20	119-4136	1	Control-Flow
20:1	110-2633	1	Seal Kit
21	110-8903	1	Orifice-Control, Flow (0.055)
22	340-92	1	Fitting-Straight

● Not serviced separately

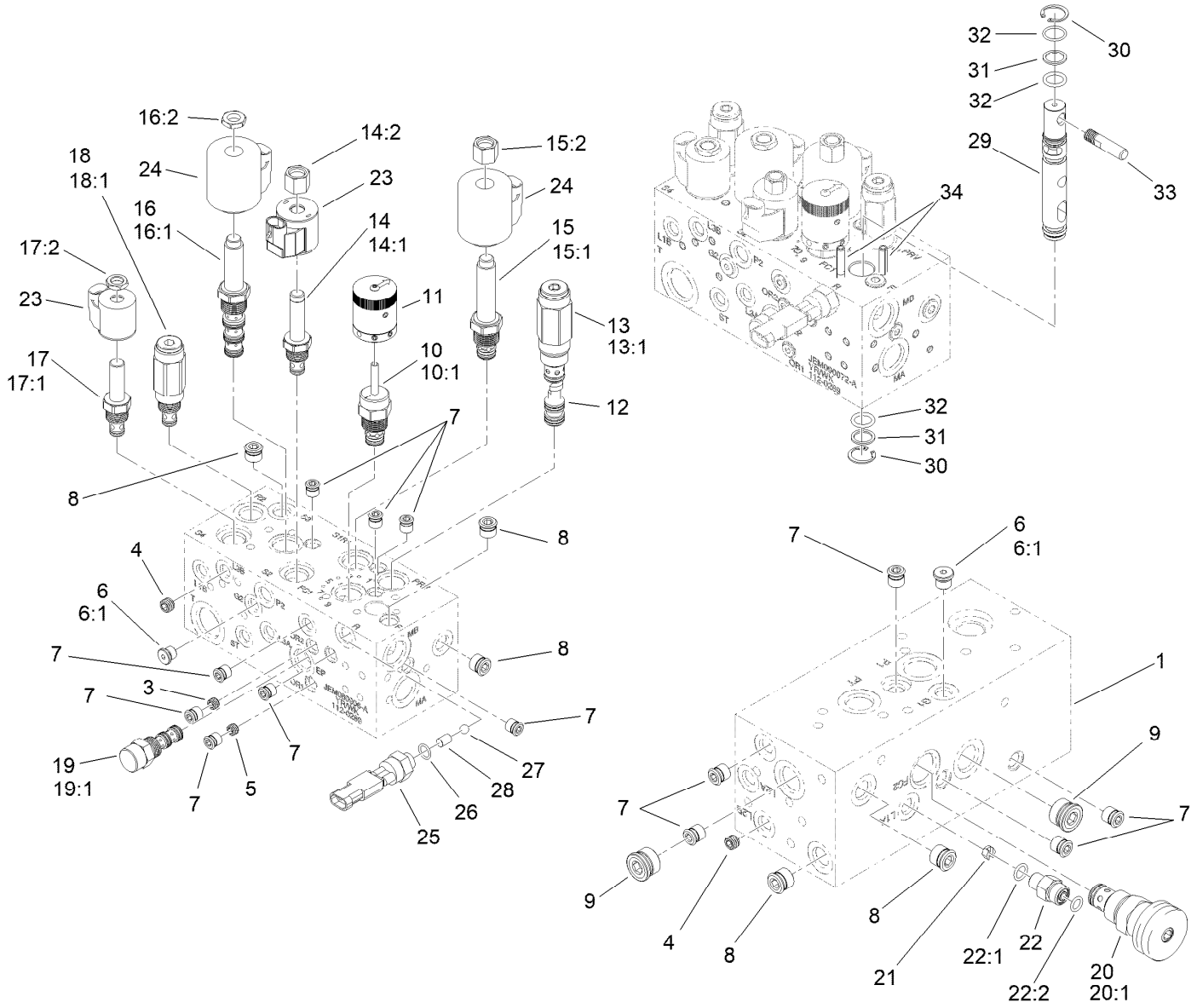

Hydraulic Manifold Assembly No. 147-3077 (continued)

Ref.	Part Number	Qty.	Description
22:1	237-78	1	O-Ring
22:2	237-21	1	O-Ring
23	105-9333	2	Coil-12Vdc
24	110-2630	2	Coil-12Vdc
25	72-4320	1	Switch-Ball
26	110-8757	1	O-Ring
27	110-8762	1	Ball-Chrome

Ref.	Part Number	Qty.	Description
28	112-6533	1	Pin-Dowel
29	112-6536	1	Spool
30	112-6532	2	Ring-Retaining
31	112-6534	2	Ring-Back Up
32	117-4606	3	O-Ring
33	110-8758	1	Handle-Spool
34	112-6531	2	Pin-Spring

● Not serviced separately

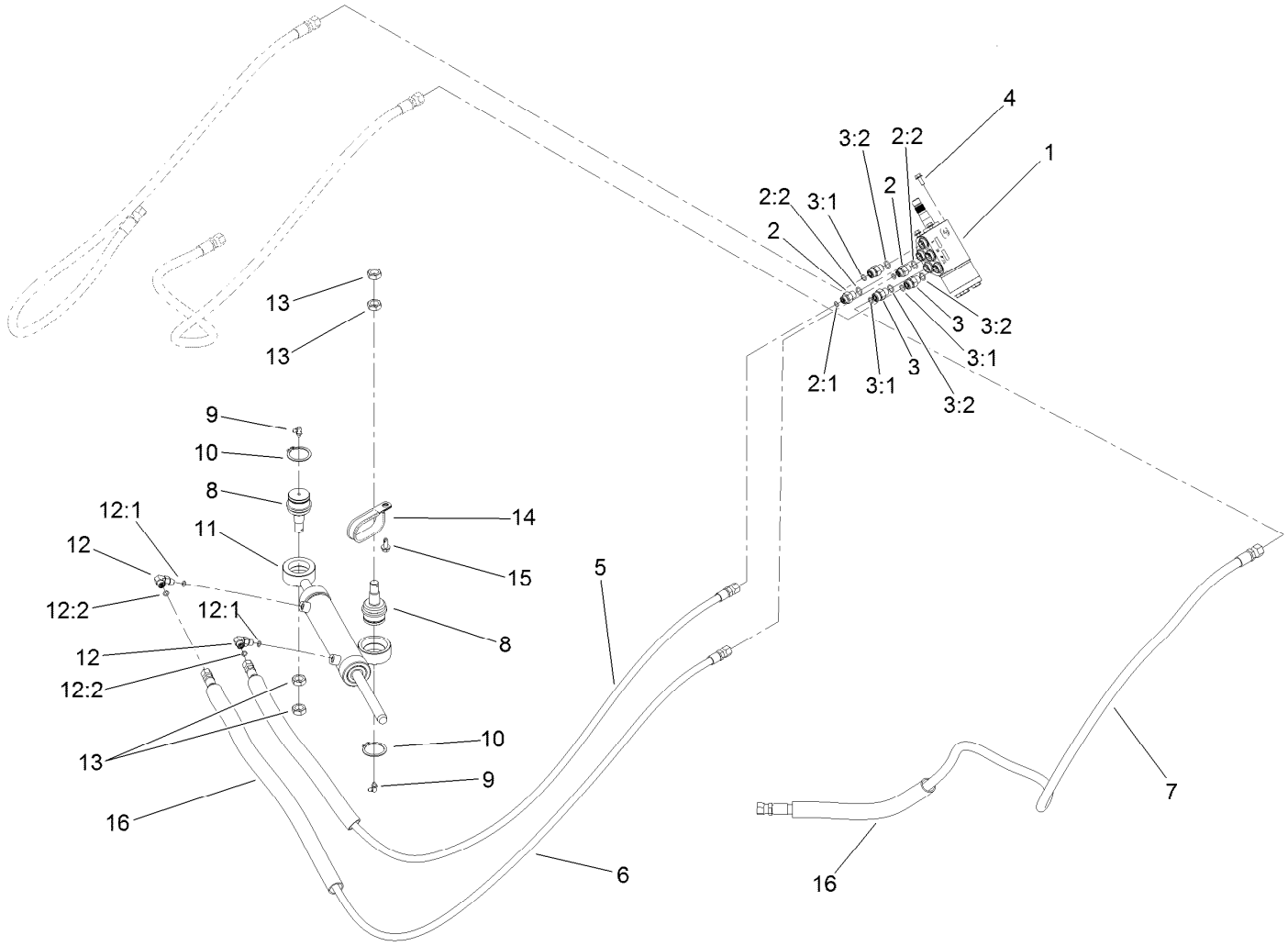

Steering Valve Assembly

Ref.	Part Number	Qty.	Description
1	114-4672	1	Steering Valve ASM
2	340-1	2	Fitting-Straight
2:1	237-21	1	O-Ring
2:2	237-42	1	O-Ring
3	340-2	3	Fitting-Straight
3:1	237-22	1	O-Ring
3:2	237-42	1	O-Ring
4	33103-016	4	Screw-HHF
5	93-2270	1	HYD Hose ASM
6	108-5675	1	Hydraulic Hose ASM
7	105-4339	1	Hose-HYD

Ref.	Part Number	Qty.	Description
8	106-6774	2	Joint-Ball
9	302-60	2	Fitting-Grease
10	32151-104	2	Ring-Retaining, External
11	132-3778	1	Cylinder-Steering
12	340-132	2	Fitting-Elbow, 90 DEG
12:1	237-78	1	O-Ring
12:2	237-21	1	O-Ring
13	3220-6	4	Nut-Jam
14	127-0516	1	Clamp-R, Double
15	32104-32	1	Screw-HWH
16	133-9032	3	Convoluted Hose Cover

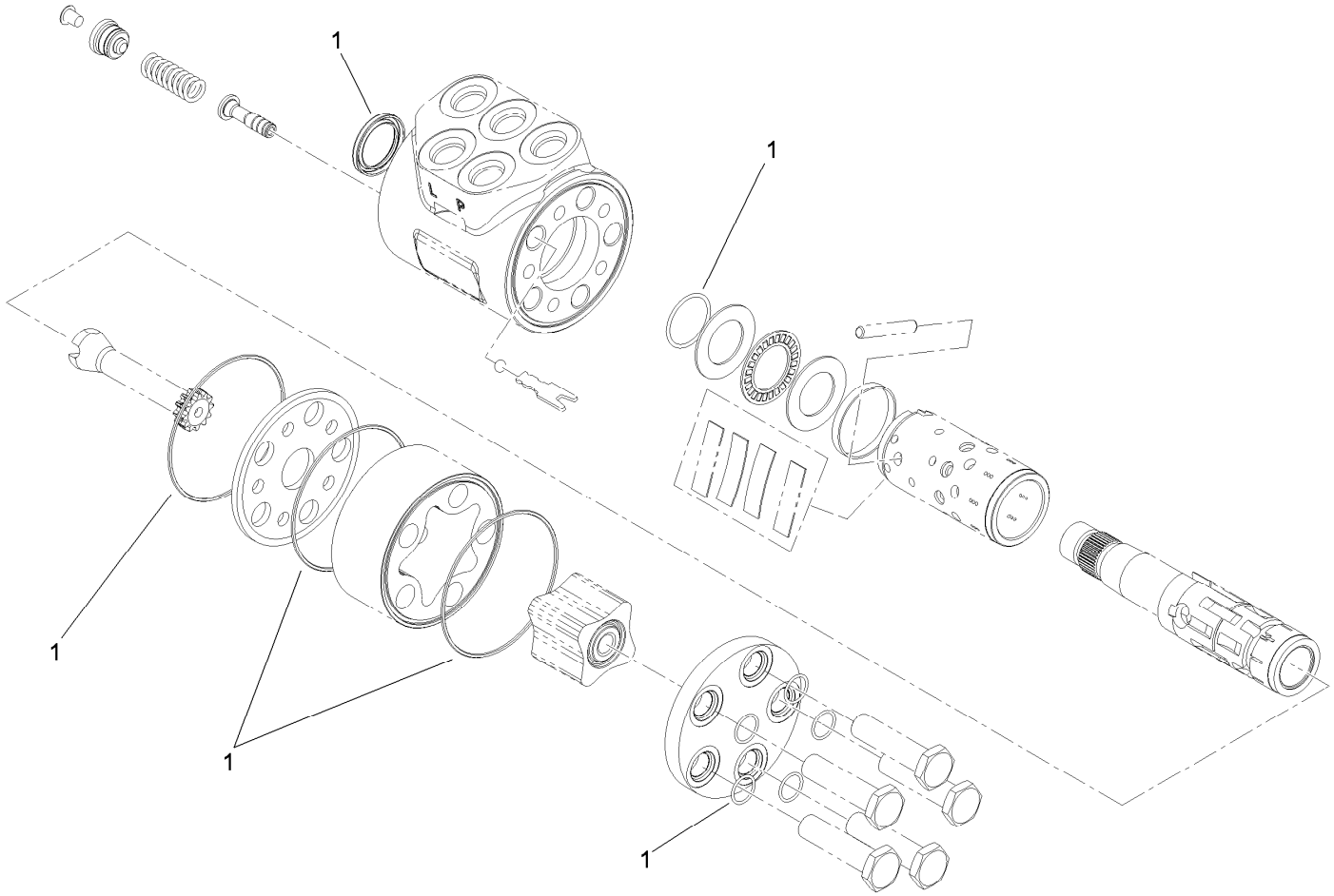

Steering Valve Assembly No. 114-4672

Ref.	*Part Number*	*Qty.*	*Description*
1	106-6716	1	Seal Kit

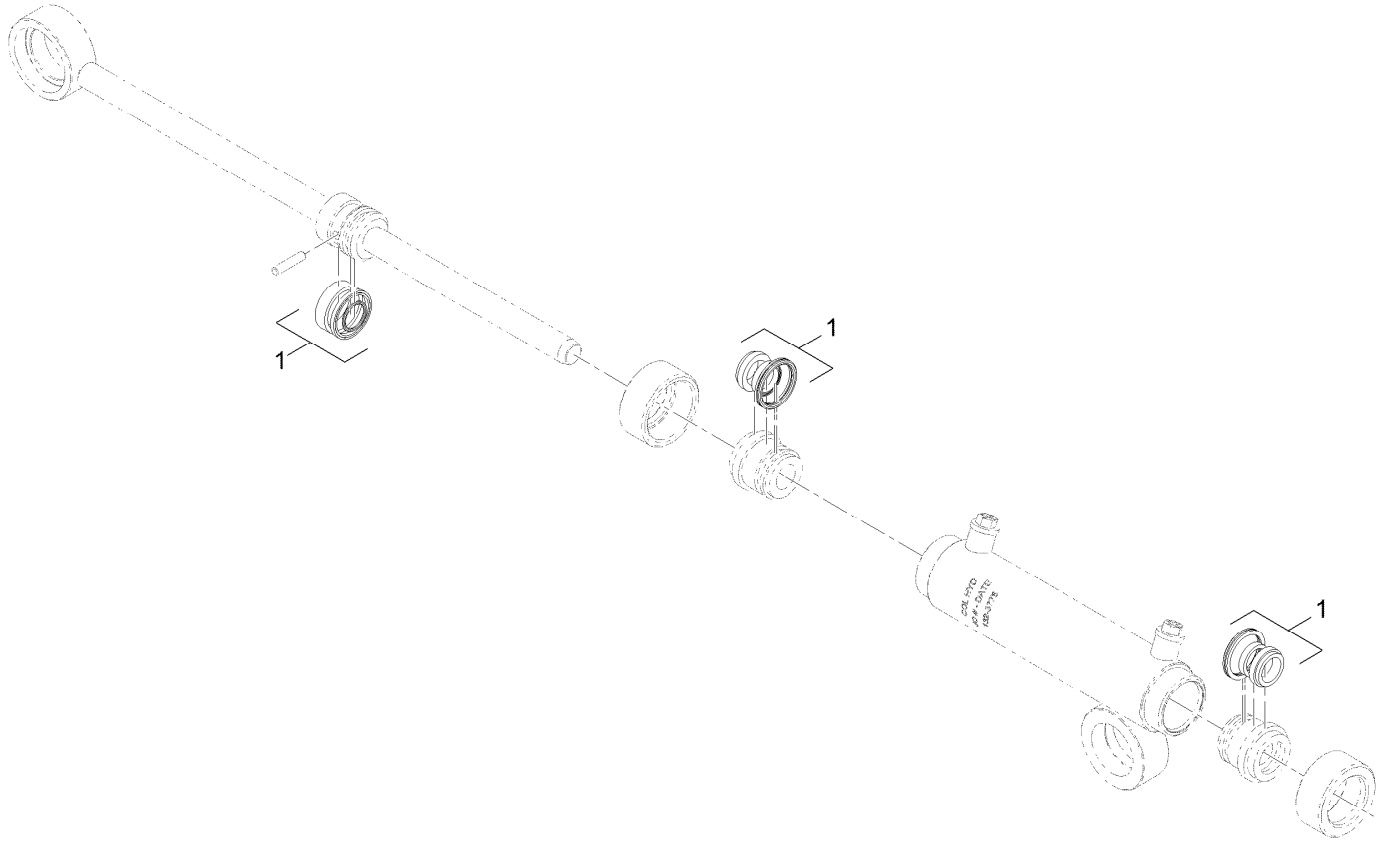

Hydraulic Cylinder Assembly No. 132-3778

Ref.	*Part Number*	*Qty.*	*Description*
1	132-6964	1	Seal Kit

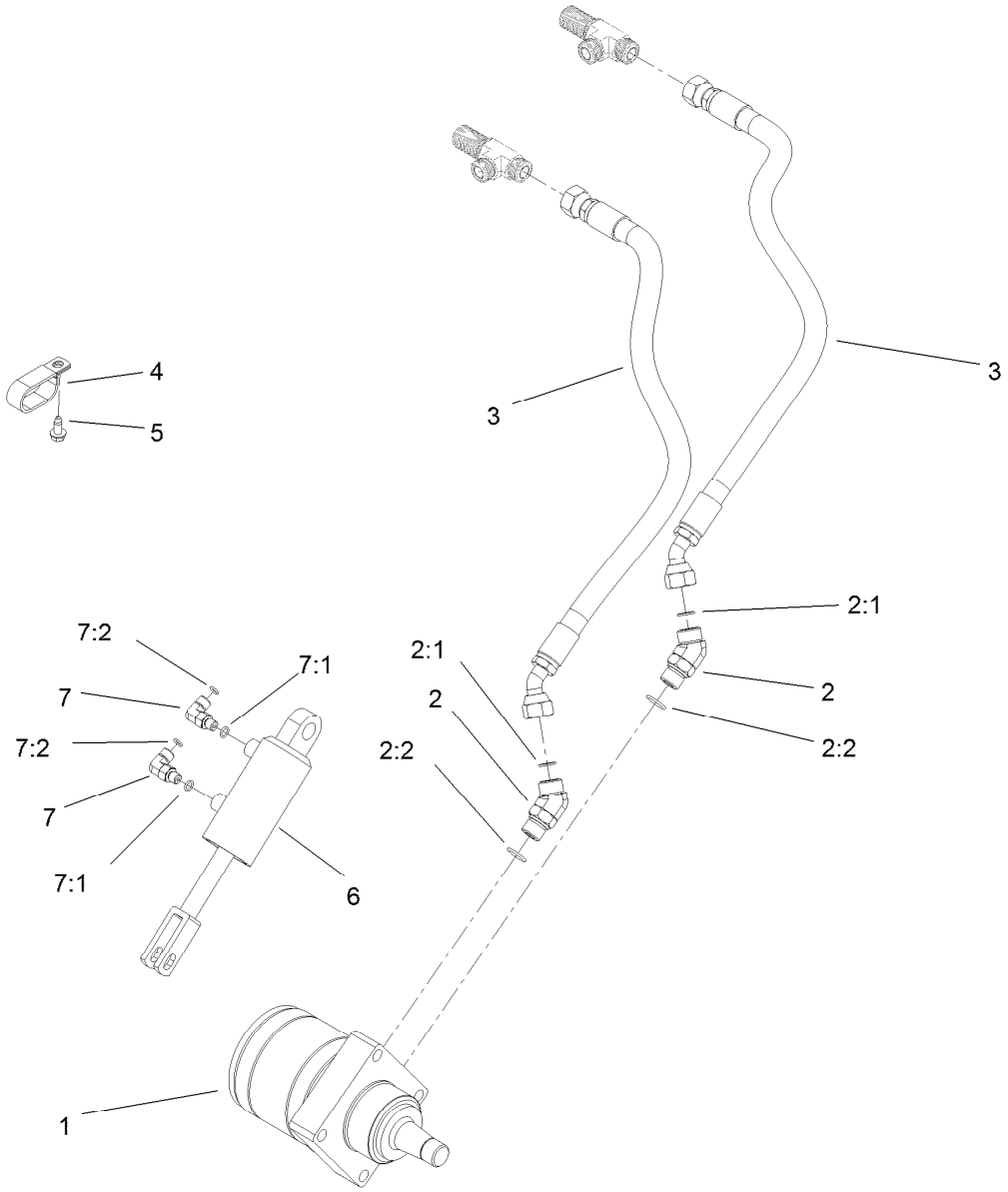

Left Hand Wheel Motor and Lift Cylinder Assembly

Ref.	*Part Number*	*Qty.*	*Description*
1	110-4015	1	HYD Motor ASM (CCW)
2	340-14	2	Fitting-HYD, 45 DEG
2:1	237-65	1	O-Ring
2:2	237-80	1	O-Ring
3	131-2003	2	Hose ASM
4	2412-137	1	Clamp-R, Double
5	32104-32	1	Screw-HWH
6	139-2651	1	Cylinder, HYD
7	340-132	2	Fitting-Elbow, 90 DEG
7:1	237-78	1	O-Ring
7:2	237-21	1	O-Ring

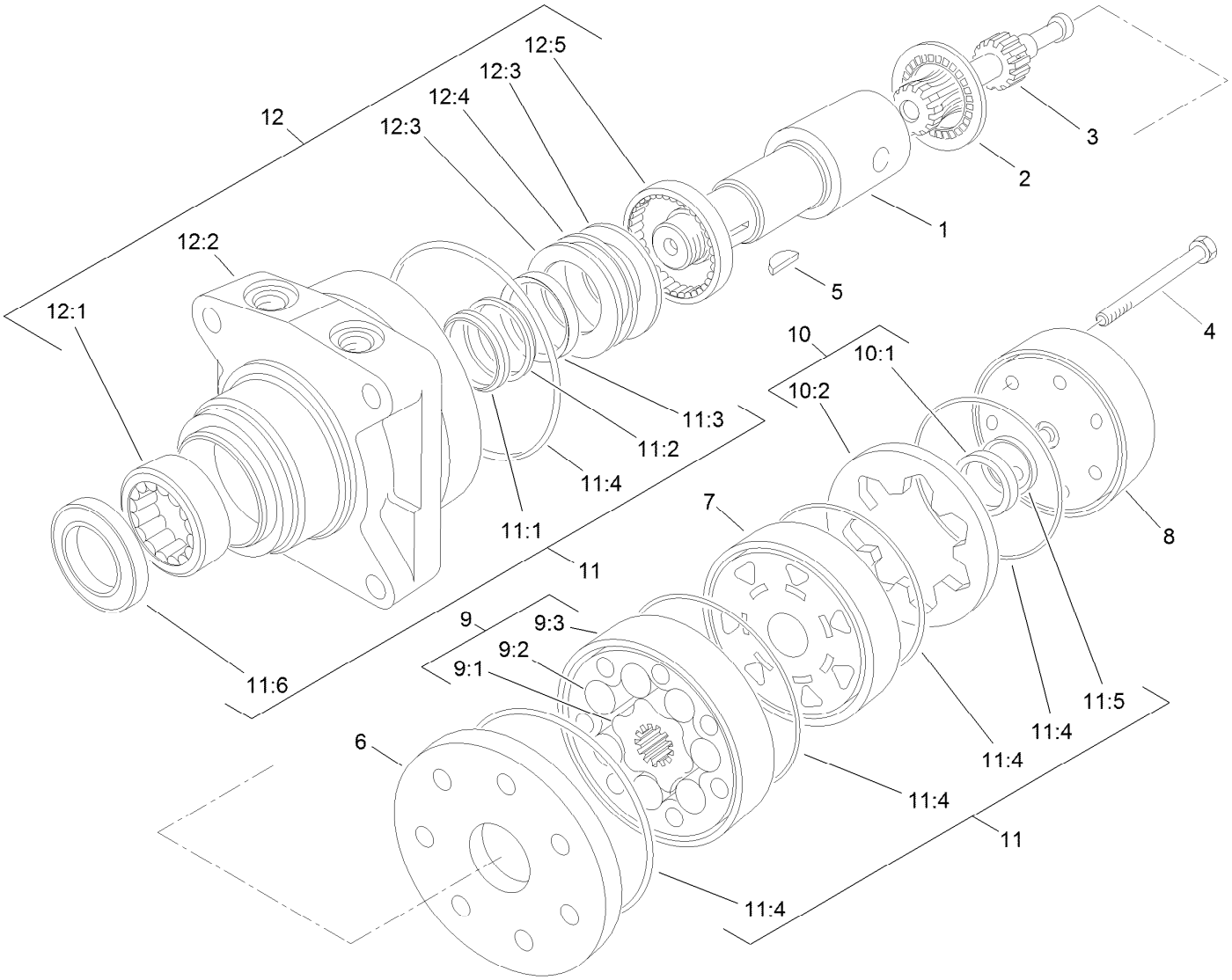

Hydraulic Motor Assembly (CCW) No. 110-4015

Ref.	Part Number	Qty.	Description
1	76-0860	1	Shaft-Coupling
2	76-0850	1	Bearing-Thrust
3	92-9761	1	Link-Drive
4	92-9762	7	Screw-HH
5	3257-42	1	Key-Woodruff
6	92-9754	1	Plate-Wear
7	76-0840	1	Manifold
8	76-0940	1	End Cover ASM
9	92-9763	1	Rotor Set
9:1		1	Rotor ●
9:2		1	Vane ●
9:3		1	Stator ●
10	76-0880	1	Commutator ASM
10:1		1	Commutator ●

Ref.	Part Number	Qty.	Description
10:2		1	Ring-Commutator ●
11	100-6131	1	Seal Kit
11:1		1	Ring-Back Up ●
11:2		1	Washer-Back Up ●
11:3		1	Seal-Shaft ●
11:4		5	Seal-Ring ●
11:5		1	Seal-Commutator ●
11:6		1	Seal-Dirt And Water ●
12	76-0810	1	Housing ASM
12:1		1	Bearing ●
12:2		1	Housing ●
12:3		2	Washer-Thrust ●
12:4		1	Bearing-Thrust ●
12:5		1	Bearing ●

● Not serviced separately

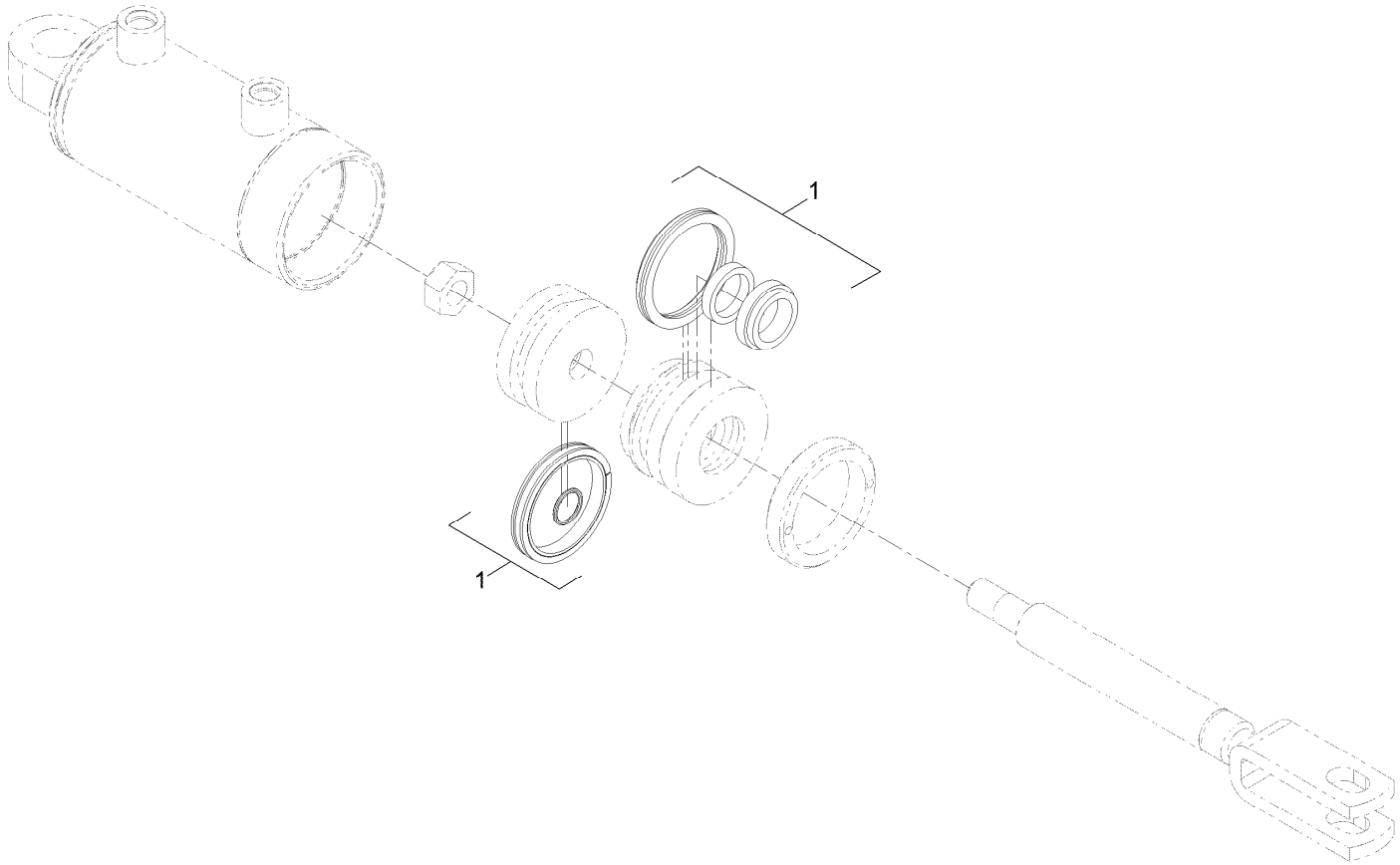

Hydraulic Cylinder Assembly No. 139-2651

Ref.	*Part Number*	*Qty.*	*Description*
1	139-2652	1	Seal Kit

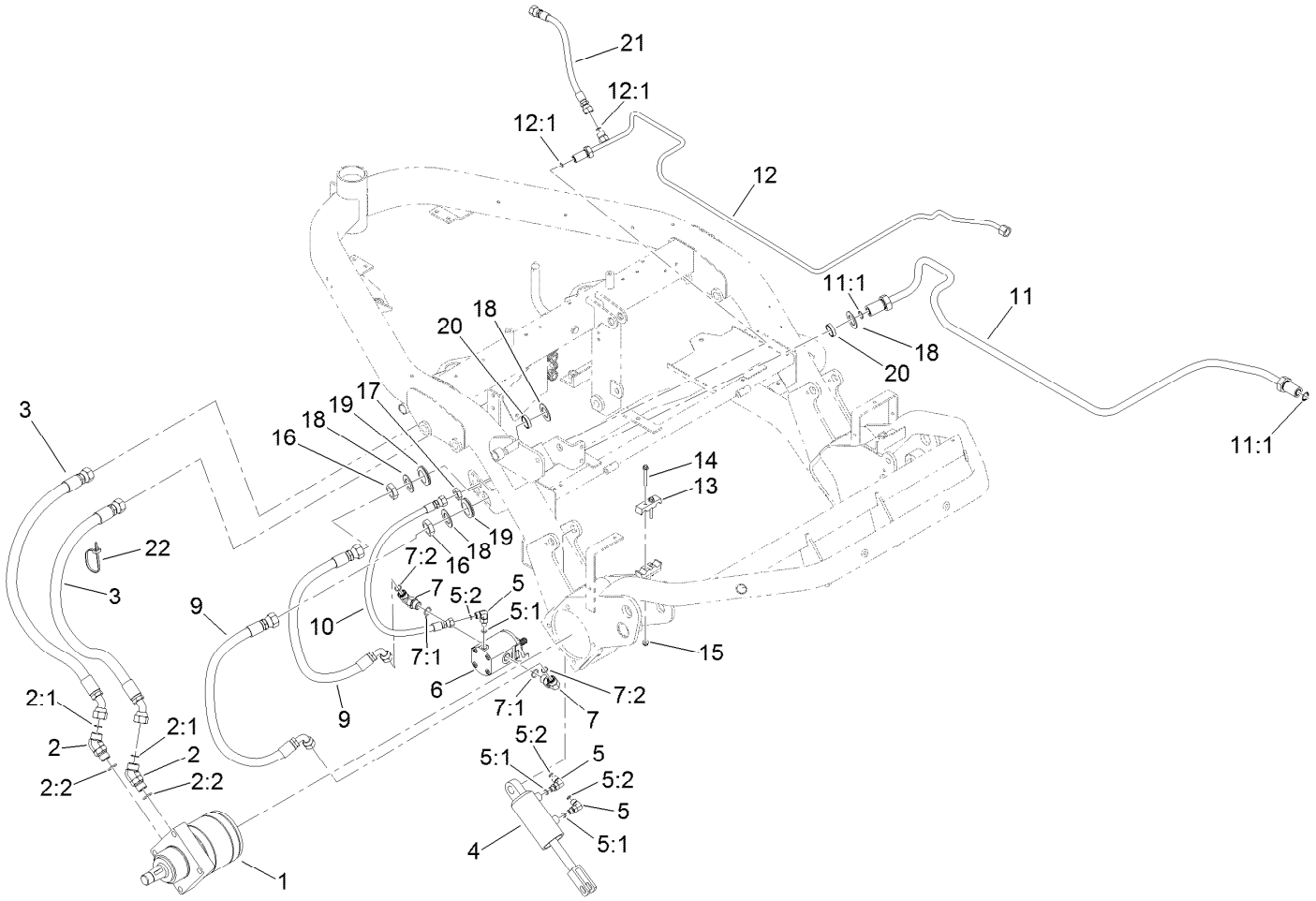

Right Hand Wheel Motor and Lift Cylinder Assembly

Ref.	Part Number	Qty.	Description
1	110-4016	1	HYD Motor ASM (CW)
2	340-14	2	Fitting-HYD, 45 DEG
2:1	237-65	1	O-Ring
2:2	237-80	1	O-Ring
3	131-2002	2	Hose ASM
4	139-2651	1	Cylinder, HYD
5	340-132	3	Fitting-Elbow, 90 DEG
5:1	237-78	1	O-Ring
5:2	237-21	1	O-Ring
6	120-2072	1	HYD Motor ASM
7	340-98	2	Fitting-Elbow, 90 DEG
7:1	237-79	1	O-Ring
7:2	237-30	1	O-Ring
9	139-6528	2	Hose ASM
10	105-5405	1	Hose-HYD

Ref.	Part Number	Qty.	Description
11	94-1318	1	Tube-HYD
11:1	237-65	2	O-Ring
12	94-1321	1	Tube-HYD
12:1	237-22	2	O-Ring
13	93-2509	2	Clamp-Tube
14	321-44	2	Screw-HHF
15	104-7201	2	Nut-HF, NI
16	340-74	2	Nut-Lock, Bulkhead
17	340-70	1	Nut-Lock
18	69-9010	4	Washer
19	240-3	2	Grommet-Rubber
20	125-1984	2	Spacer
21	110-4008	1	HYD Hose ASM
22	3290-378	1	Tie-Cable

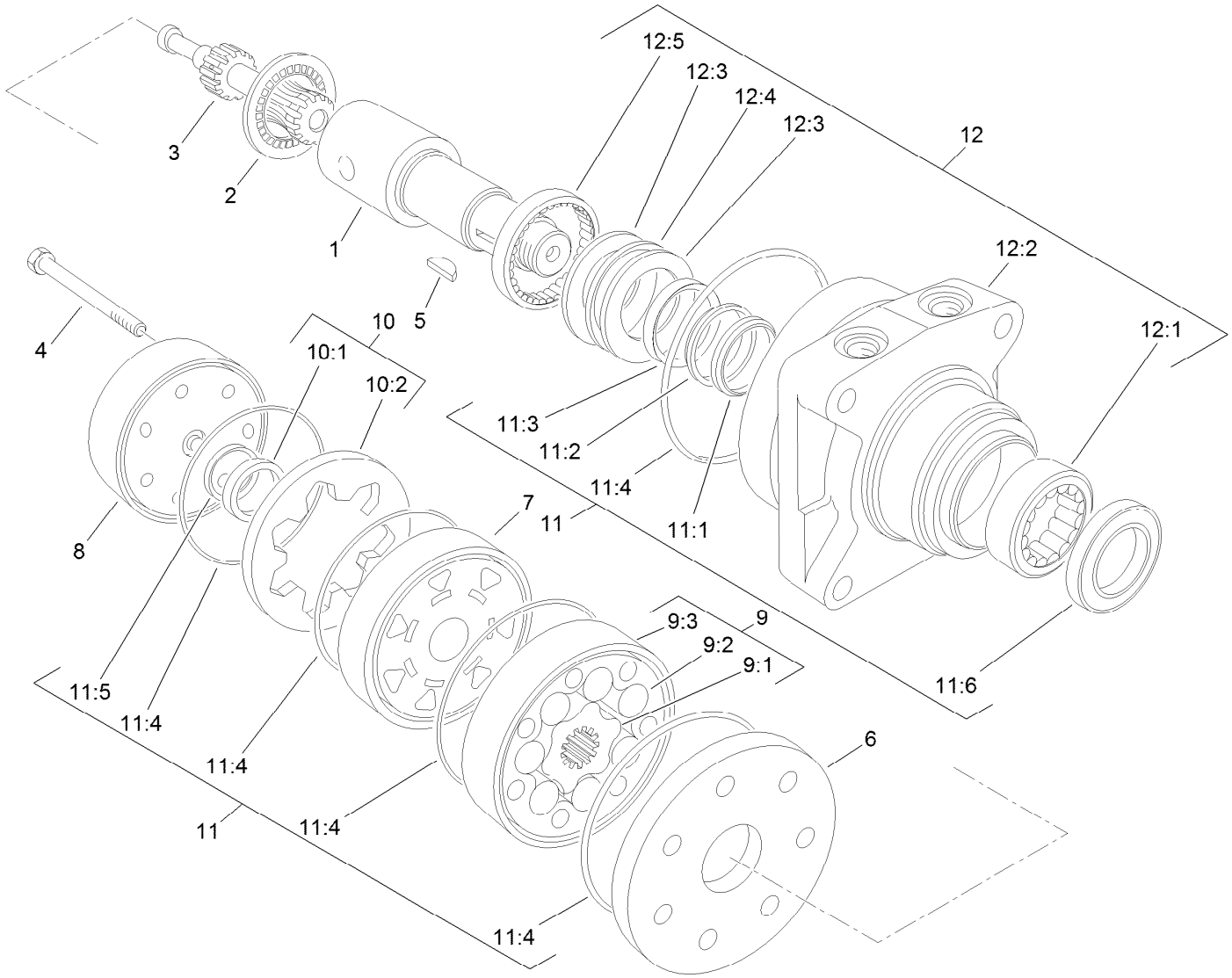

Hydraulic Motor Assembly (CW) No. 110-4016

Ref.	Part Number	Qty.	Description
1	76-0860	1	Shaft-Coupling
2	76-0850	1	Bearing-Thrust
3	92-9761	1	Link-Drive
4	92-9762	7	Screw-HH
5	3257-42	1	Key-Woodruff
6	92-9754	1	Plate-Wear
7	76-0840	1	Manifold
8	76-0940	1	End Cover ASM
9	92-9763	1	Rotor Set
9:1		1	Rotor ●
9:2		1	Vane ●
9:3		1	Stator ●
10	76-0880	1	Commutator ASM
10:1		1	Commutator ●

Ref.	Part Number	Qty.	Description
10:2		1	Ring-Commutator ●
11	100-6131	1	Seal Kit
11:1		1	Ring-Back Up ●
11:2		1	Washer-Back Up ●
11:3		1	Seal-Shaft ●
11:4		5	Seal-Ring ●
11:5		1	Seal-Commutator ●
11:6		1	Seal-Dirt And Water ●
12	76-0810	1	Housing ASM
12:1		1	Bearing ●
12:2		1	Housing ●
12:3		2	Washer-Thrust ●
12:4		1	Bearing-Thrust ●
12:5		1	Bearing ●

● Not serviced separately

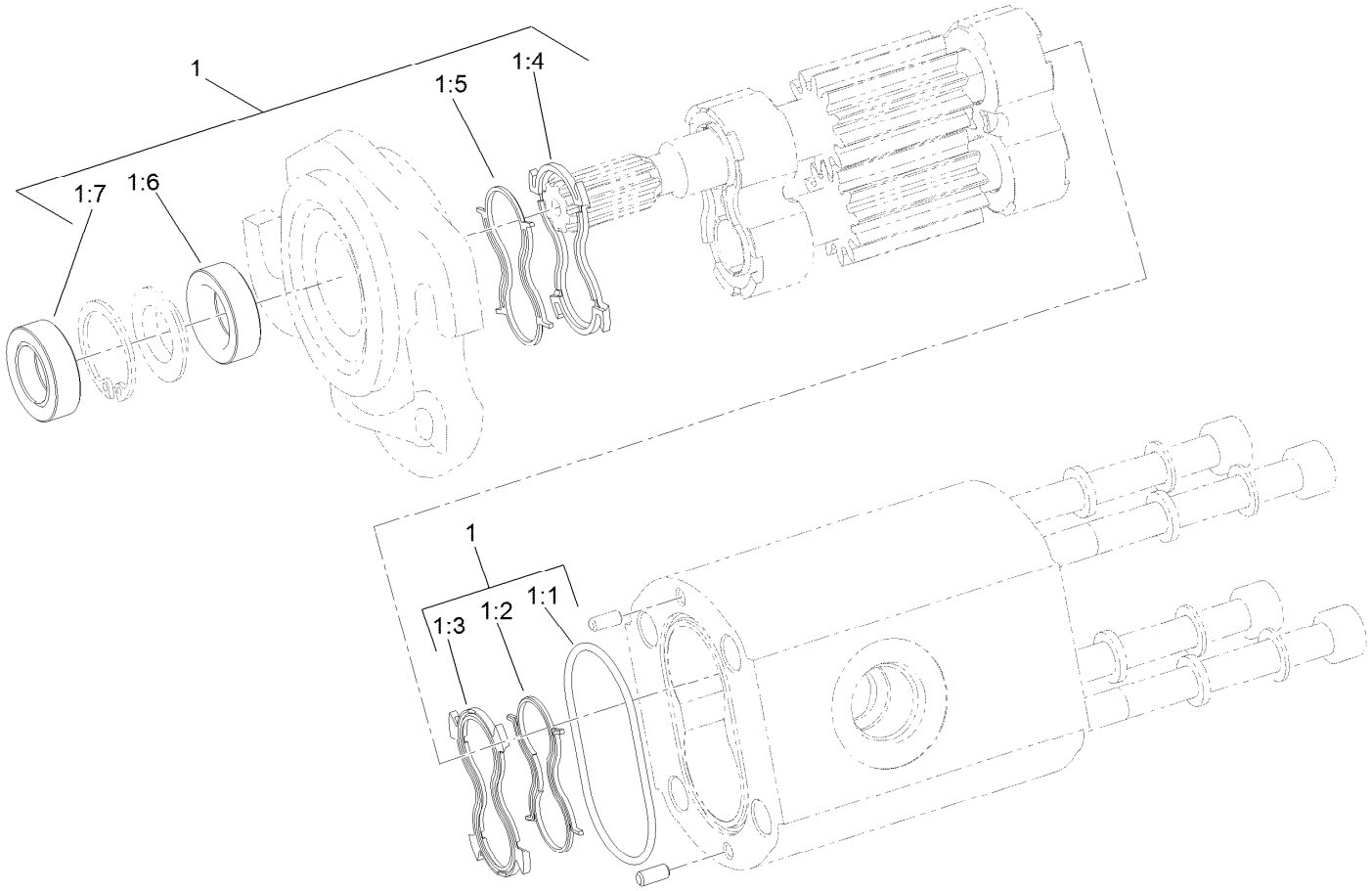

Hydraulic Reel Motor Assembly No. 120-2072

Ref.	*Part Number*	*Qty.*	*Description*
1	119-7113	1	Seal Kit
1:1		1	O-Ring Housing ●
1:2		1	Seal-Anti Extrusion ●
1:3		1	Seal-Plate, Balancing ●
1:4		1	Seal-Plate, Balancing ●
1:5		1	Seal-Anti Extrusion ●
1:6		1	Seal-Shaft (Inboard) ●
1:7		1	Seal-Shaft (Outboard) ●

● Not serviced separately

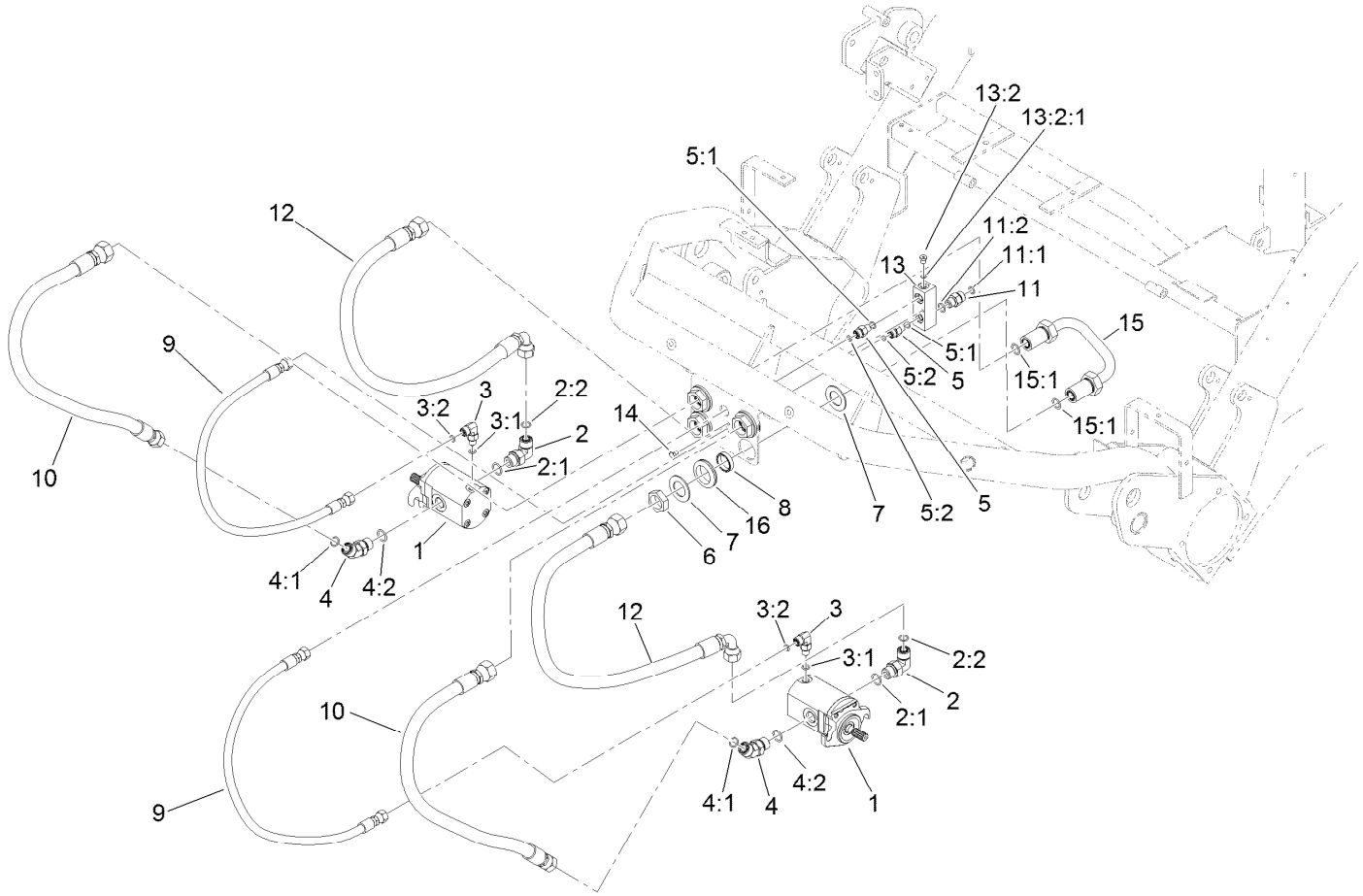

Front Reel Motors Assembly

Ref.	Part Number	Qty.	Description
1	120-2072	2	HYD Motor ASM
2	340-98	2	Fitting-Elbow, 90 DEG
2:1	237-79	1	O-Ring
2:2	237-30	1	O-Ring
3	340-132	2	Fitting-Elbow, 90 DEG
3:1	237-78	1	O-Ring
3:2	237-21	1	O-Ring
4	340-101	2	Fitting-HYD, 45 DEG
4:1	237-30	1	O-Ring
4:2	237-79	1	O-Ring
5	340-92	2	Fitting-Straight
5:1	237-78	1	O-Ring
5:2	237-21	1	O-Ring
6	340-74	4	Nut-Lock, Bulkhead
7	69-9010	8	Washer

Ref.	Part Number	Qty.	Description
8	125-1984	4	Spacer
9	106-9674	2	Hose-HYD
10	139-6529	2	Hose ASM
11	340-2	1	Fitting-Straight
11:1	237-22	1	O-Ring
11:2	237-42	1	O-Ring
12	139-6530	2	Hose ASM
13	93-2238	1	T-Block
13:2	353-991	1	Plug-Hex, Hollow
13:2:1	237-156	1	O-Ring
14	33113-008	1	Screw-HH
15	94-1319	1	Tube-HYD
15:1	237-65	2	O-Ring
16	240-3	4	Grommet-Rubber

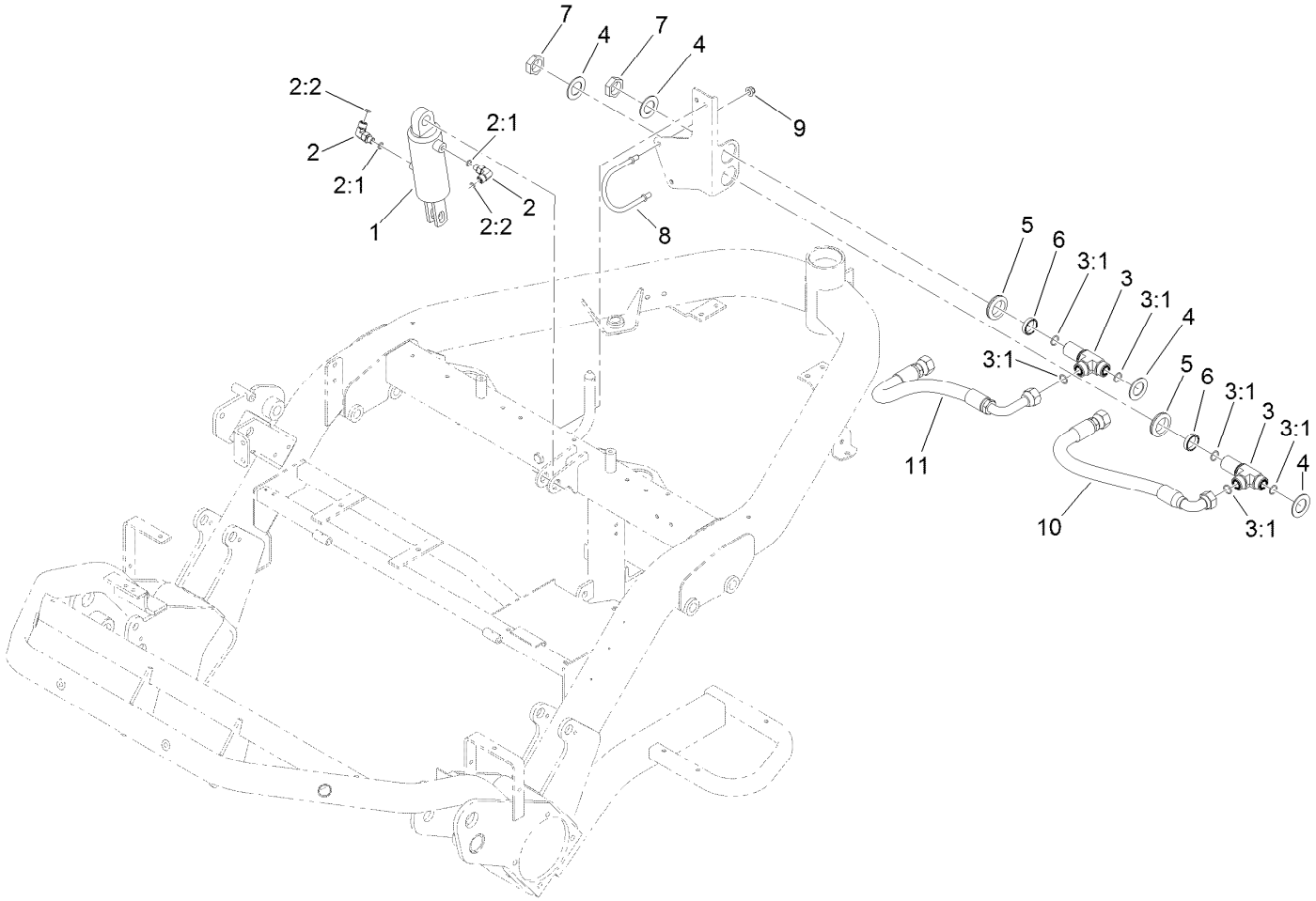

Center Lift Cylinder Assembly

Ref.	*Part Number*	*Qty.*	*Description*
1	139-2650	1	Cylinder, HYD
2	340-132	2	Fitting-Elbow, 90 DEG
2:1	237-78	1	O-Ring
2:2	237-21	1	O-Ring
3	94-5350	2	Fitting-Tee
3:1	237-65	3	O-Ring
4	69-9010	4	Washer
5	240-3	2	Grommet-Rubber
6	125-1984	2	Spacer
7	340-74	2	Nut-Lock, Bulkhead
8	131-8776	1	Retainer-Hose
9	104-8300	2	Nut-HF, NI
10	131-6207	1	Hose ASM
11	131-6208	1	Hose ASM

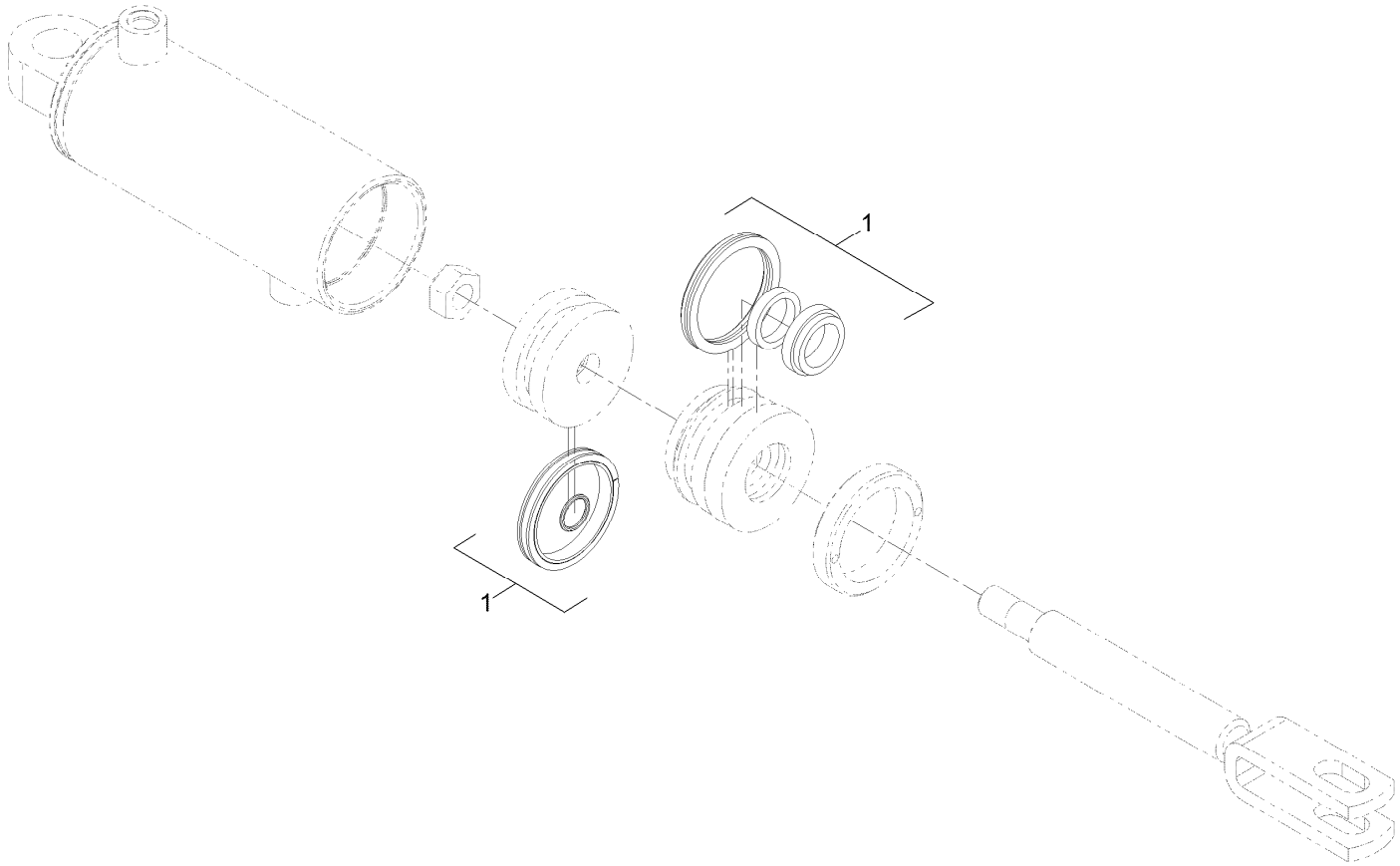

Hydraulic Cylinder Assembly No. 139-2650

Ref.	*Part Number*	*Qty.*	*Description*
1	139-2652	1	Seal Kit

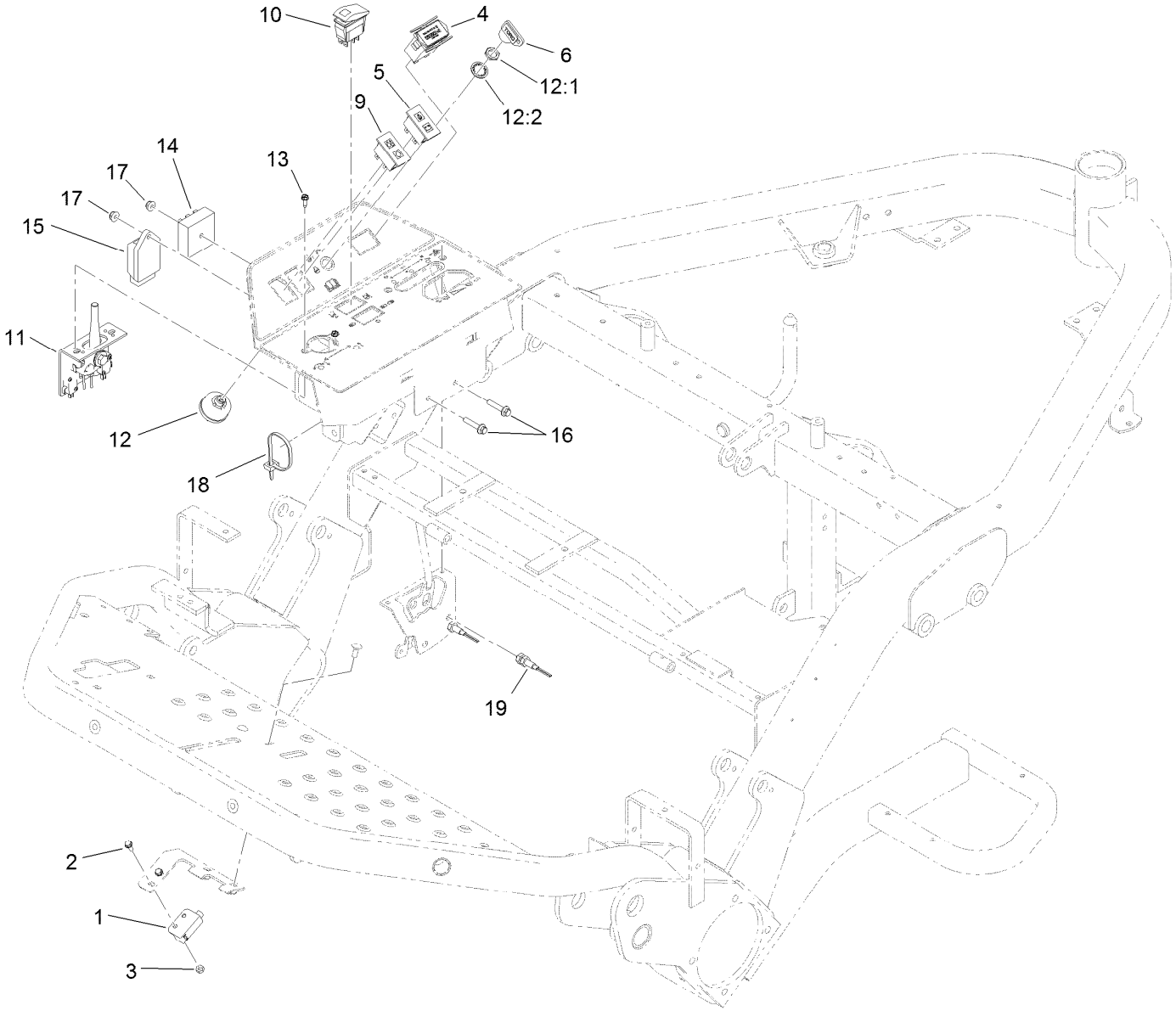

Console Assembly

Ref.	Part Number	Qty.	Description
1	104-2057	1	Sensor
2	3290-321	2	Screw-HWH
3	3296-2	2	Nut-Lock, NI
4	120-2244	1	Hourmeter
5	100-8070	1	Lamp-Warning
6	63-8360	2	Key-Ignition
9	100-8071	1	Lamp-Warning
10	100-8072	1	Switch-Rocker, On-None-(On)
11	120-5280	1	Bracket-Joystick

Ref.	Part Number	Qty.	Description
12	27-2360	1	Switch
12:1	218-446	1	Nut-Hex
12:2	218-447	1	Washer-Lock
13	32144-19	2	Screw-SHWH
14	92-2538	1	Module-Timer
15	107-9097	1	Controller-Glow
16	3234-21	2	Screw-HHF
17	104-7201	2	Nut-HF, NI
18	3290-378	2	Tie-Cable
19	112-0278	2	Switch-Reed

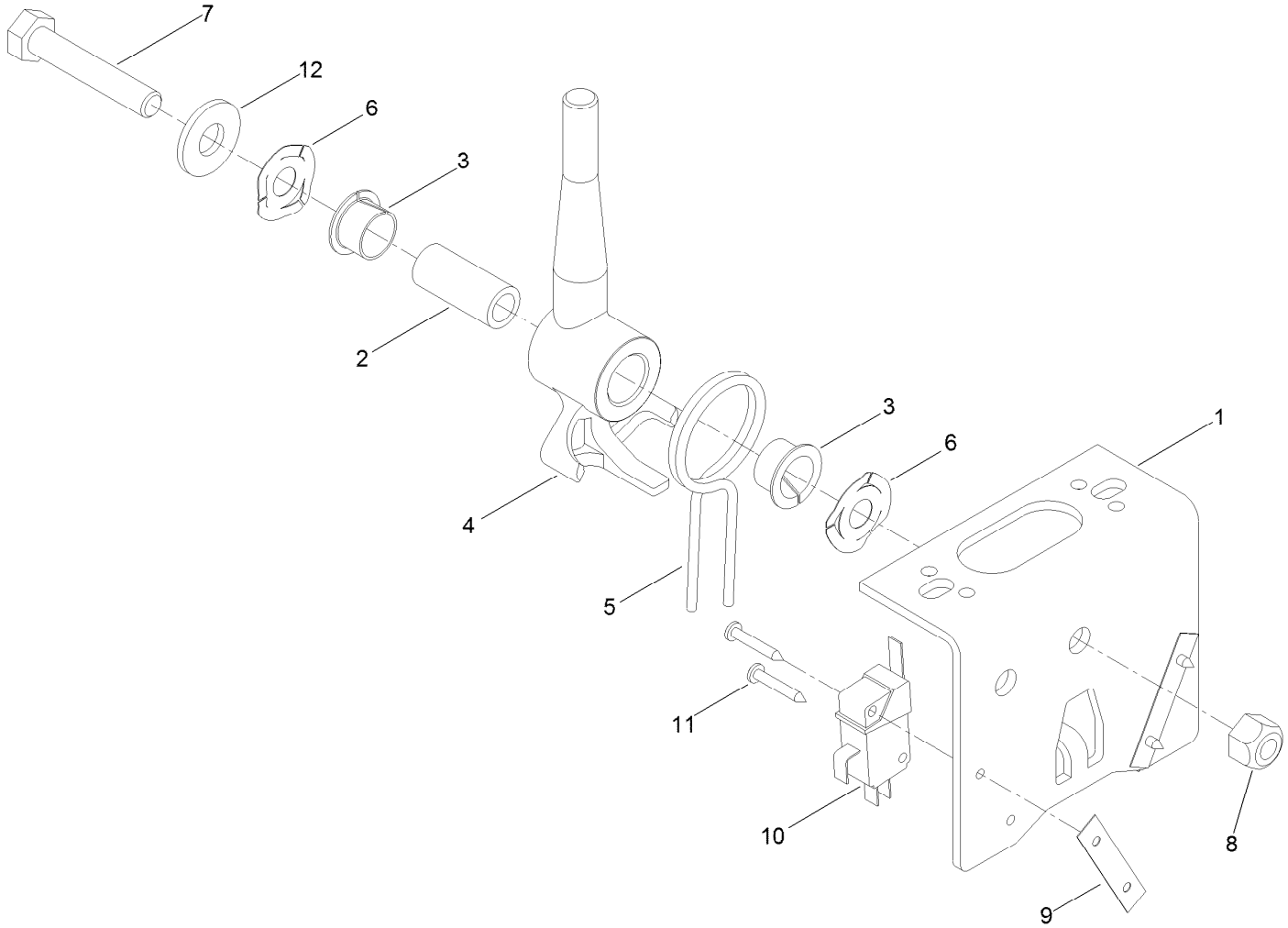

Joystick Bracket Assembly No. 120-5280

Ref.	*Part Number*	*Qty.*	*Description*
1	115-5357-03	1	Bracket-Joystick
2	106-4192	1	Spacer
3	93-5547	2	Bushing-Nylon
4	119-3540	1	Hub-Pivot, Joystick
5	105-8289	1	Spring-Torsion
6	106-4193	2	Washer-Finger, Spring
7	322-9	1	Screw-HH
8	3296-29	1	Nut-Lock, NI
9	3290-354	2	Nut-Speed
10	108-6496	2	Switch (W/Boot)
11	95-3003	4	Screw-PPHTF
12	3256-3	1	Washer-Flat

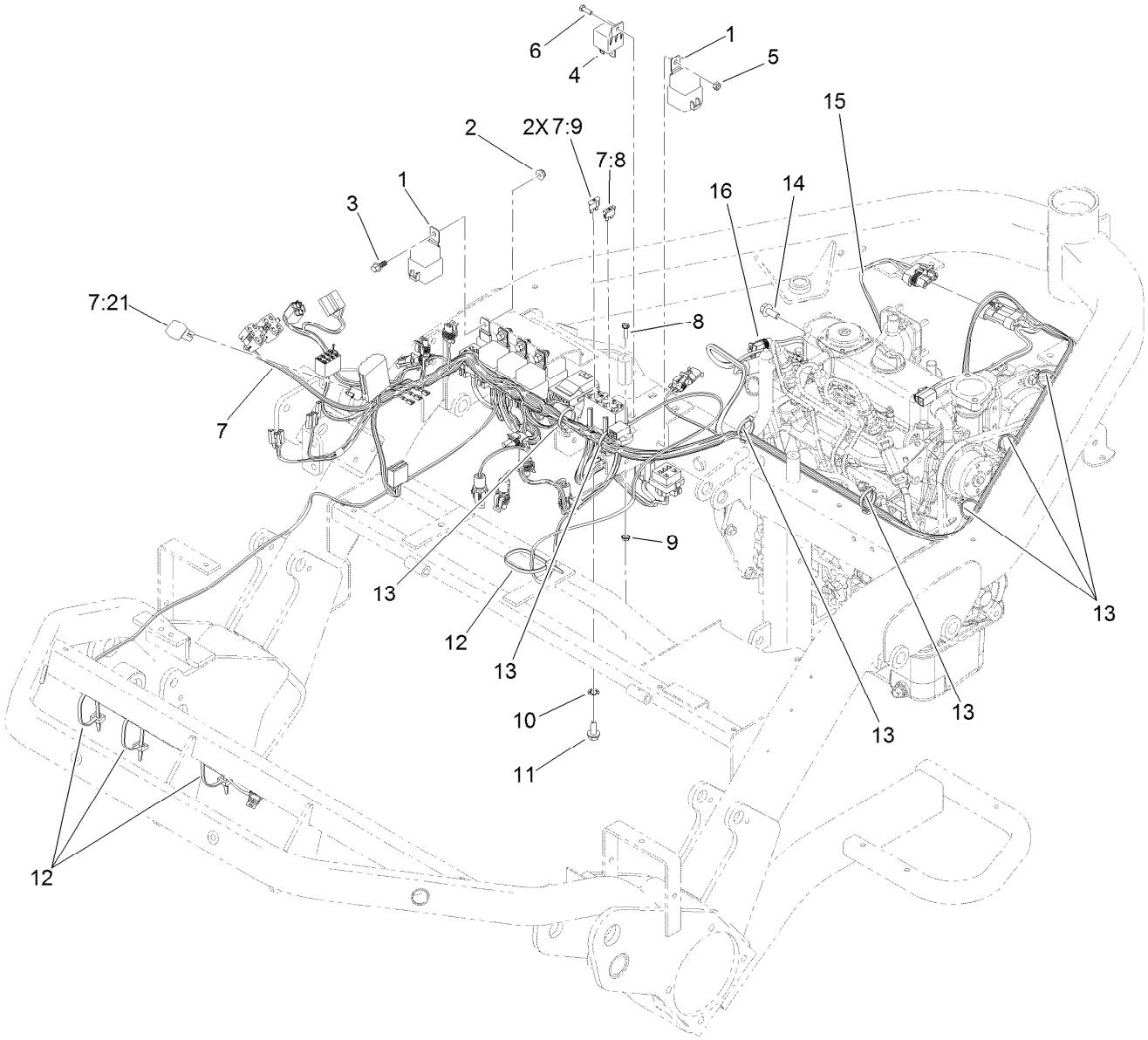

Electrical Harness Assembly

Ref.	Part Number	Qty.	Description
1	99-7430	9	Relay-Mini
2	104-7201	4	Nut-HF, NI
3	99-6810	4	Screw-HHF
4	99-7435	1	Relay
5	3296-2	1	Nut-Lock, NI
6	3290-134	1	Screw
7	122-1392	1	Harness-Wire
7:8	109355	1	Fuse-Blade, 15 Amp
7:9	218-578	2	Fuse-Blade, 10 Amp
7:18	92-3188	2	Diode-Board, Circuit ●

Ref.	Part Number	Qty.	Description
7:21	104-4022	1	Resistor-75 Ohm
8	32105-13	2	Screw-HWH
9	32149-7	2	Nut-Keps
10	3256-23	1	Washer-Plain
11	32104-32	1	Screw-HWH
12	3290-378	4	Tie-Cable
13	32180-030	7	Clip-Tie
14	33104-020	1	Screw-HHF
15	99-3441	1	Harness-Wire, Fusible Link
16	120-6325	1	Harness-Wire, Ground

● Not illustrated

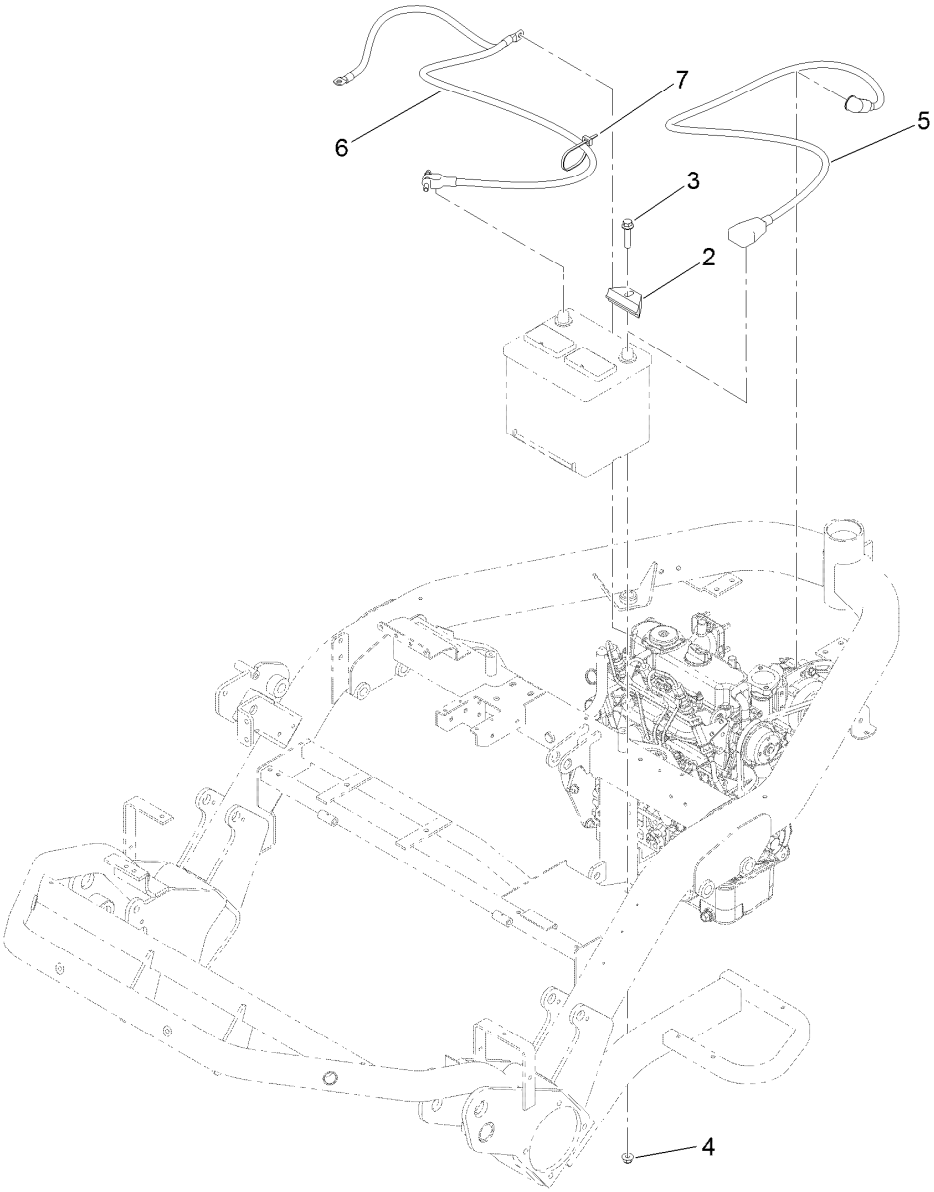

Battery Assembly

Ref.	Part Number	Qty.	Description
2	138-6335	1	Retainer-Battery
3	3234-19	1	Screw-HHF
4	104-8301	1	Nut-HF, NI
5	95-8853	1	Cable-Battery, Positive
6	99-8167	1	Cable-Battery, Negative
7	3290-378	1	Tie-Cable

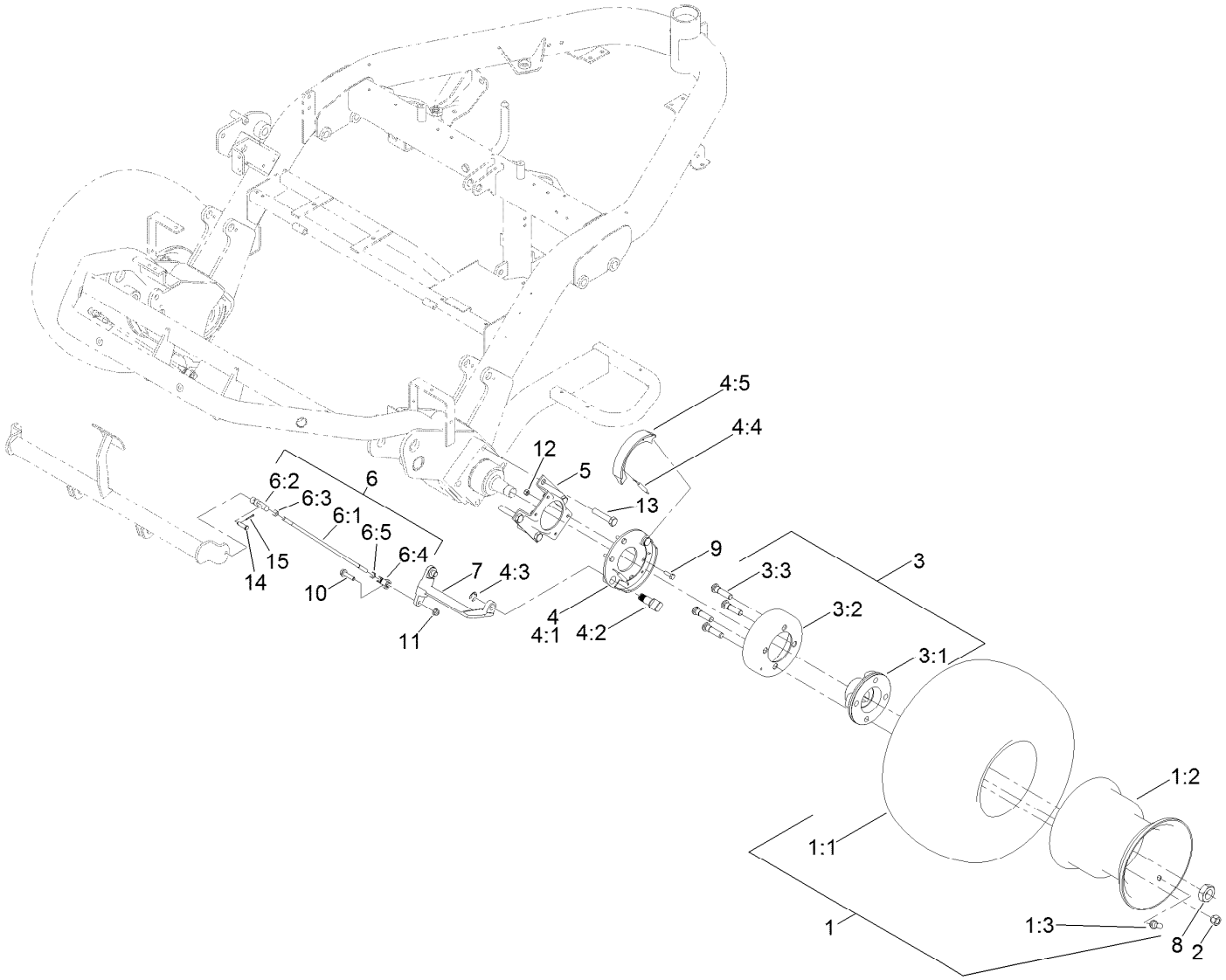

Front Wheel and Brake Assembly

Ref.	Part Number	Qty.	Description
1	114-4665	2	Tire ASM
1:1	70-8500	1	Tire-Smooth, 4-Ply
1:2	114-4643	1	Wheel
1:3	232-27	1	Stem-Valve
2	242-50	8	Nut-Lug
3	120-5330	2	Brake Drum ASM
3:1	108-2103-0P	1	Hub-Wheel
3:2	10-6850	1	Drum-Brake
3:3	117-3749	4	Stud-Drive
4	104-7705	2	Brake ASM
4:1	70-9870	1	Plate-Backing
4:2	104-7707	1	Shaft-Cam, Brake
4:3	104-7706	1	E-Ring, Bowed
4:4	70-9880	2	Spring-Return
4:5	70-9840	2	Shoe-Brake
5	84-2000-0P	2	Bracket-Brake

Ref.	Part Number	Qty.	Description
6	115-6675	2	Brake Rod ASM
6:1	93-2069	1	Rod-Brake
6:2	1-303105	1	Yoke-Adjustable
6:3	3220-2	1	Nut-Jam
6:4	93-2070	1	Clevis-Swivel
6:5	3220-20	1	Nut-Jam
7	93-2096	2	Lever-Brake
8	26-3790	2	Nut-Lock
9	321-5	8	Screw-HH
10	3234-36	2	Screw-HHF
11	104-8300	2	Nut-HF, NI
12	3296-42	8	Nut-Lock, NI
13	33116-060	8	Screw-HH
14	283-61	2	Pin-Yoke
15	3272-6	2	Pin-Cotter

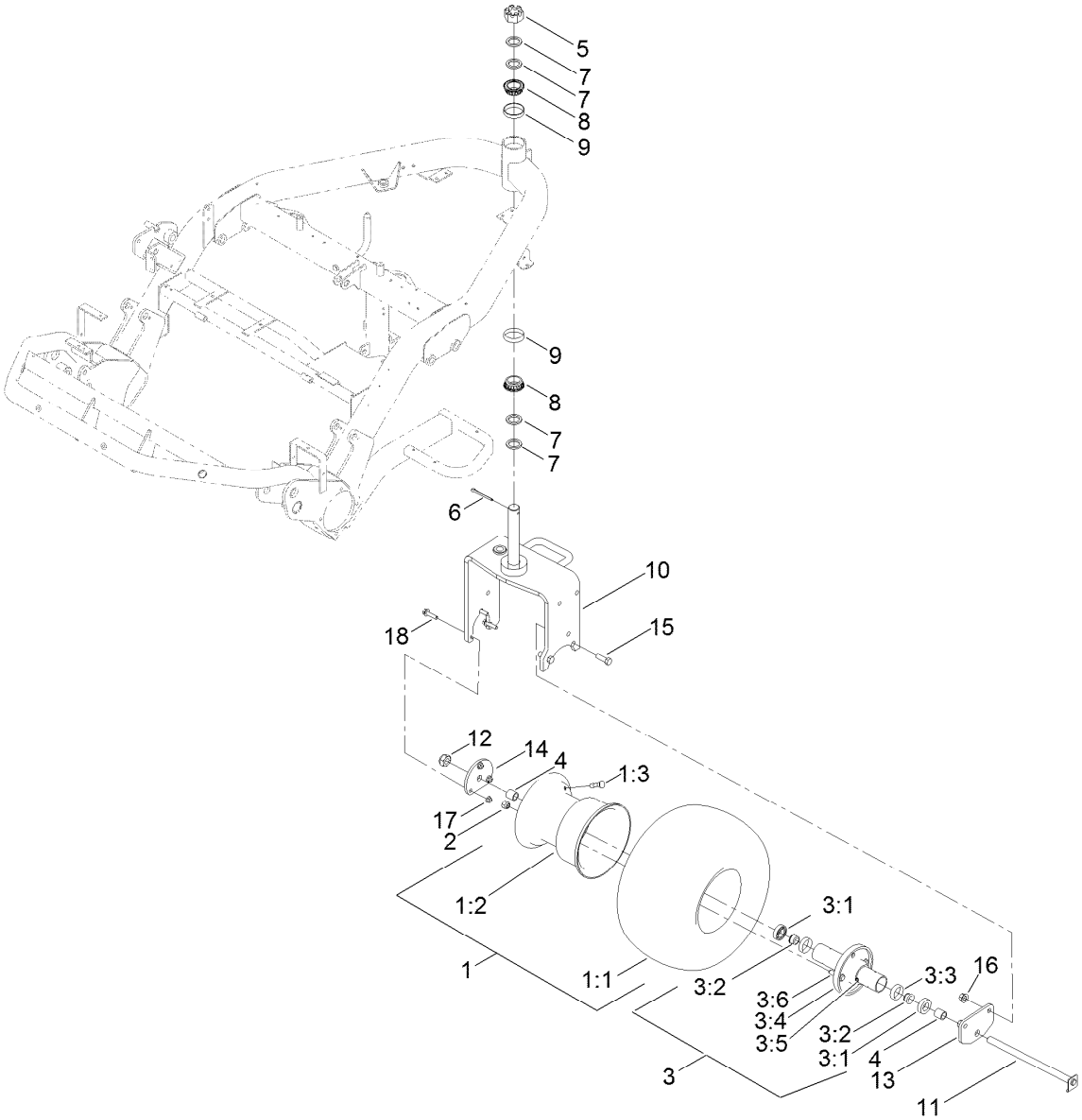

Rear Wheel and Brake Assembly

Ref.	Part Number	Qty.	Description
1	114-4665	1	Tire ASM
1:1	70-8500	1	Tire-Smooth, 4-Ply
1:2	114-4643	1	Wheel
1:3	232-27	1	Stem-Valve
2	242-50	4	Nut-Lug
3	72-9710	1	Hub-Tire
3:1	253-111	2	Seal-Oil
3:2	254-78	2	Bearing-Cone
3:3	254-79	2	Bearing-Roller, Cup
3:4	75-9440	1	Hub ASM
3:5	302-11	1	Fitting-Lube, 45 DEG
3:6	10-6830	4	Stud-Type, Drive
4	70-8490	2	Spacer-Spindle, Rear
5	32136-9	1	Nut-Hex, Slotted

Ref.	Part Number	Qty.	Description
6	3272-37	1	Pin-Cotter
7	18-6320	4	Washer-Steering
8	115-9472	2	Bearing-Cone And Seal
9	115-9471	2	Bearing-Cup
10	112-9174-01	1	Fork-Caster
11	70-8370	1	Bolt
12	3296-67	1	Nut-Lock, NI
13	99-1485-01	1	Plate-Adapter, Motor
14	99-1486-01	1	Plate-Adapter
15	325-6	2	Screw-HH
16	99-5107	2	Nut-Lock
17	104-8301	3	Nut-HF, NI
18	114-4681	3	Screw-HHF

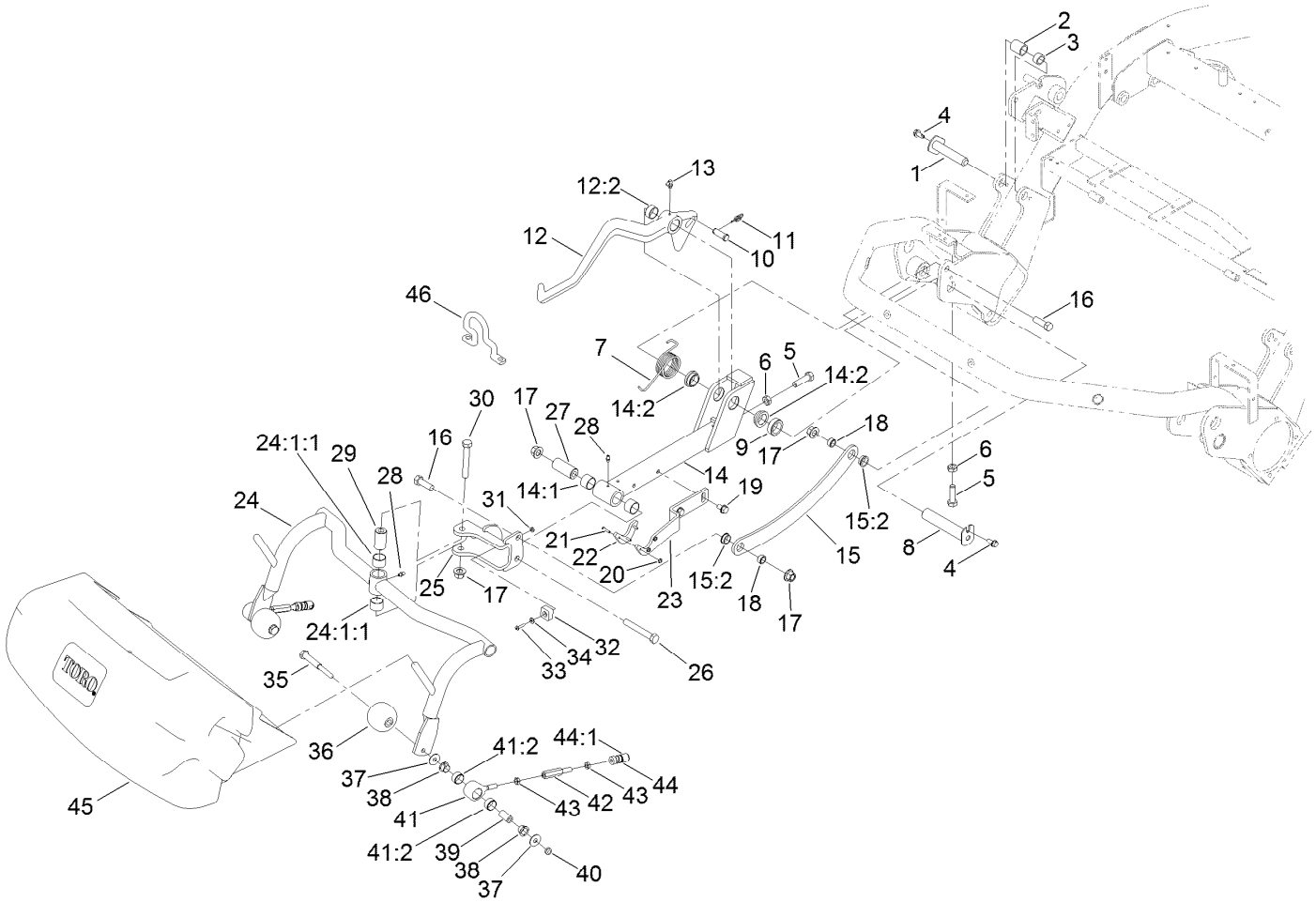

Right Cutting Unit Suspension Assembly

Ref.	Part Number	Qty.	Description
1	140-5248	1	Pin-Ram, Pivot
2	105-3838	1	Spacer
3	74-3730	1	Spacer-Spindle, Rear
4	9264964	2	Screw-HWH, Thread Cut
5	325-7	2	Screw-HH
6	3218-5	2	Nut-Jam
7	105-3809	1	Spring-Torsion, RH
8	94-8198	1	Pin
9	93-2384	1	Spacer-Carrier
10	283-8	1	Pin-Clevis
11	112-1491	1	Pin-Cotter
12	99-4213	1	RH Lift Arm ASM
12:2	92-8995	2	Bushing
13	302-60	1	Fitting-Grease
14	99-4115	1	Front Lift Frame ASM
14:1	98-4166	2	Bushing
14:2	94-9610	2	Bushing-Flange
15	99-4258	1	RH Link Bracket ASM

Ref.	Part Number	Qty.	Description
15:2	99-4243	2	Bushing-Flange
16	325-6	2	Screw-HH
17	99-5107	4	Nut-Lock
18	99-4201	2	Tube-Spacer
19	32144-69	2	Screw-HWHTF
20	3296-54	3	Nut-Lock
21	3250-17	3	Screw-PPH
22	99-4225	1	Pad-Wear
23	99-4111-01	1	Plate-Transport, 1 And 3
24	136-8577	1	Pull Frame ASM
24:1:1	98-4166	2	Bushing
25	99-4183-01	1	RH Clevis ASM
26	325-14	1	Screw-HH
27	99-4072	1	Spacer
28	302-5	2	Fitting-Grease
29	99-4109	1	Spacer
30	325-13	1	Screw-HH
31	3296-12	1	Nut-Lock, NI

● Not illustrated

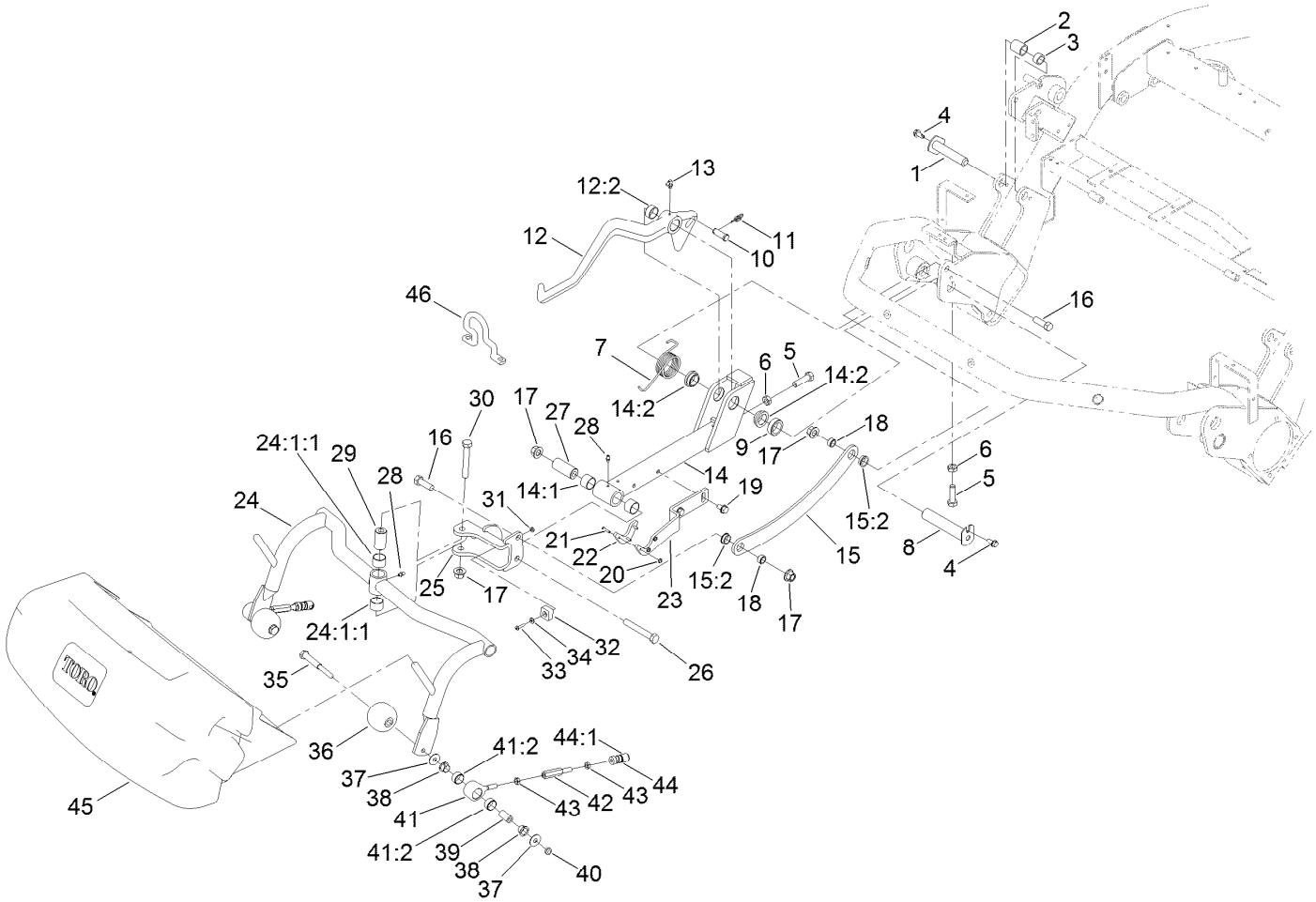

Right Cutting Unit Suspension Assembly (continued)

Ref.	Part Number	Qty.	Description
32	94-1392	1	Pad-Rubber
33	3250-27	1	Screw-PPH
34	3256-14	1	Washer-Flat
35	108-6543	2	Shaft-Roller
36	99-4210	2	Roller-Anti Scalp
37	119-4150	4	Washer-Flat
38	104-7738	4	Bushing-Flange
39	108-6544	2	Spacer
40	3296-59	2	Nut-Lock, NI
41	139-6539	2	Pull Link ASM

Ref.	Part Number	Qty.	Description
41:2	95-0532	2	Rubber Bushing ASM
42	88-6870	2	Extension-Arm, Pull
43	3220-3	4	Nut-HJ
44	99-1460	2	Ball Joint Receiver ASM
44:1	99-1461	1	Sleeve-Joint, Ball
45	106-4689	1	Grass Basket ASM
45:2	104-2607	1	Strip-Basket ●
45:3	3290-382	8	Rivet-Pop ●
46	110-2397	3	Hook-Lift, Offset (1.25 Inch, GR3250)

● Not illustrated

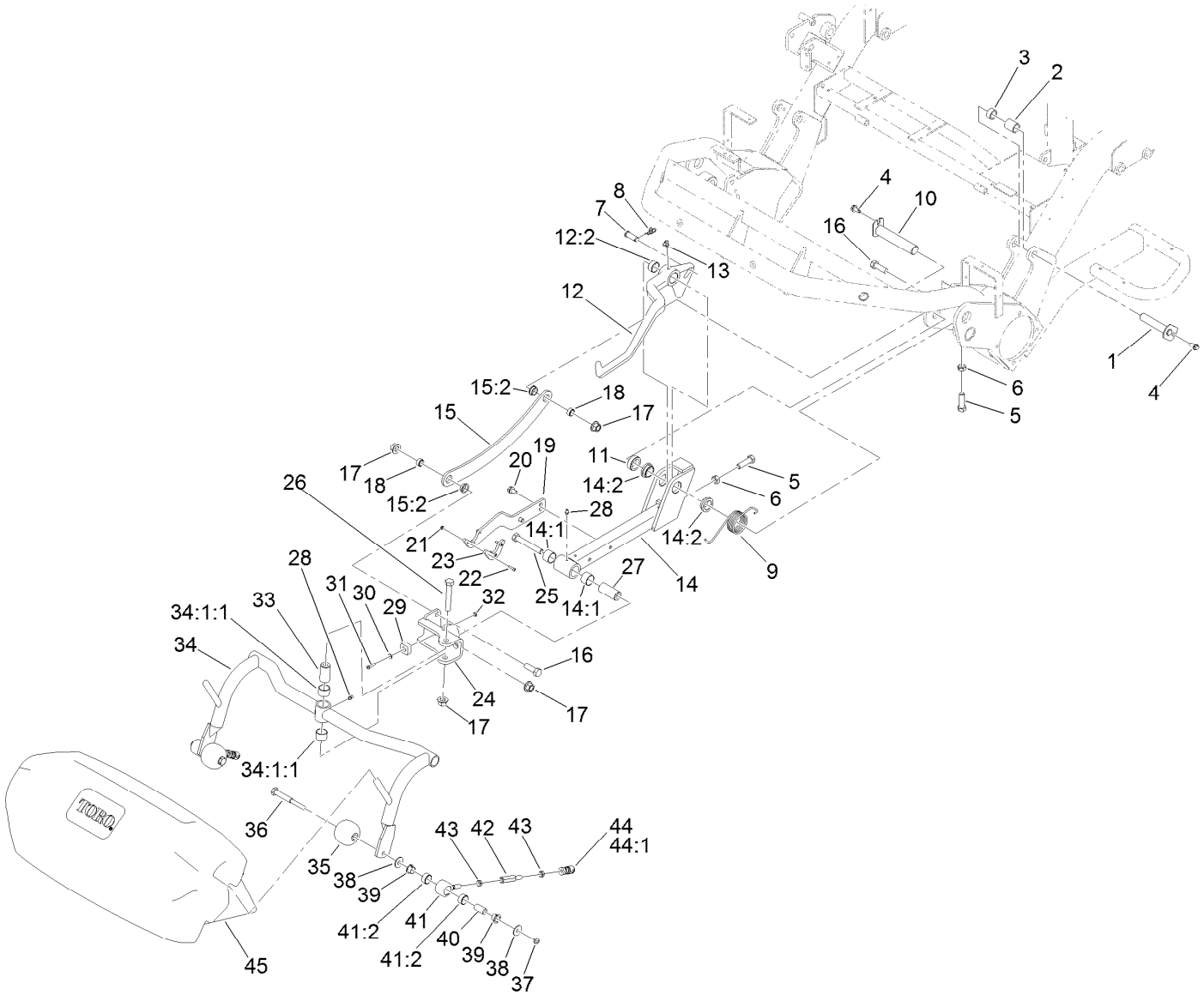

Left Cutting Unit Suspension Assembly

Ref.	Part Number	Qty.	Description
1	140-5248	1	Pin-Ram, Pivot
2	105-3838	1	Spacer
3	74-3730	1	Spacer-Spindle, Rear
4	9264964	2	Screw-HWH, Thread Cut
5	325-7	2	Screw-HH
6	3218-5	2	Nut-Jam
7	283-8	1	Pin-Clevis
8	112-1491	1	Pin-Cotter
9	105-3818	1	Spring-Torsion, LH
10	94-8198	1	Pin
11	93-2384	1	Spacer-Carrier
12	99-4212	1	LH Lift Arm ASM
12:2	92-8995	2	Bushing
13	302-60	1	Fitting-Grease
14	99-4115	1	Front Lift Frame ASM
14:1	98-4166	2	Bushing
14:2	94-9610	2	Bushing-Flange
15	99-4260	1	LH Link Bracket ASM

Ref.	Part Number	Qty.	Description
15:2	99-4243	2	Bushing-Flange
16	325-6	2	Screw-HH
17	99-5107	4	Nut-Lock
18	99-4201	2	Tube-Spacer
19	99-4112-01	1	Plate-Transport, #2
20	32144-69	2	Screw-HWHTF
21	3296-54	3	Nut-Lock
22	3250-17	3	Screw-PPH
23	99-4225	1	Pad-Wear
24	99-4182-01	1	LH Clevis ASM
25	325-14	1	Screw-HH
26	325-13	1	Screw-HH
27	99-4072	1	Spacer
28	302-5	2	Fitting-Grease
29	94-1392	1	Pad-Rubber
30	3256-14	1	Washer-Flat
31	3250-27	1	Screw-PPH
32	3296-12	1	Nut-Lock, NI

● Not illustrated

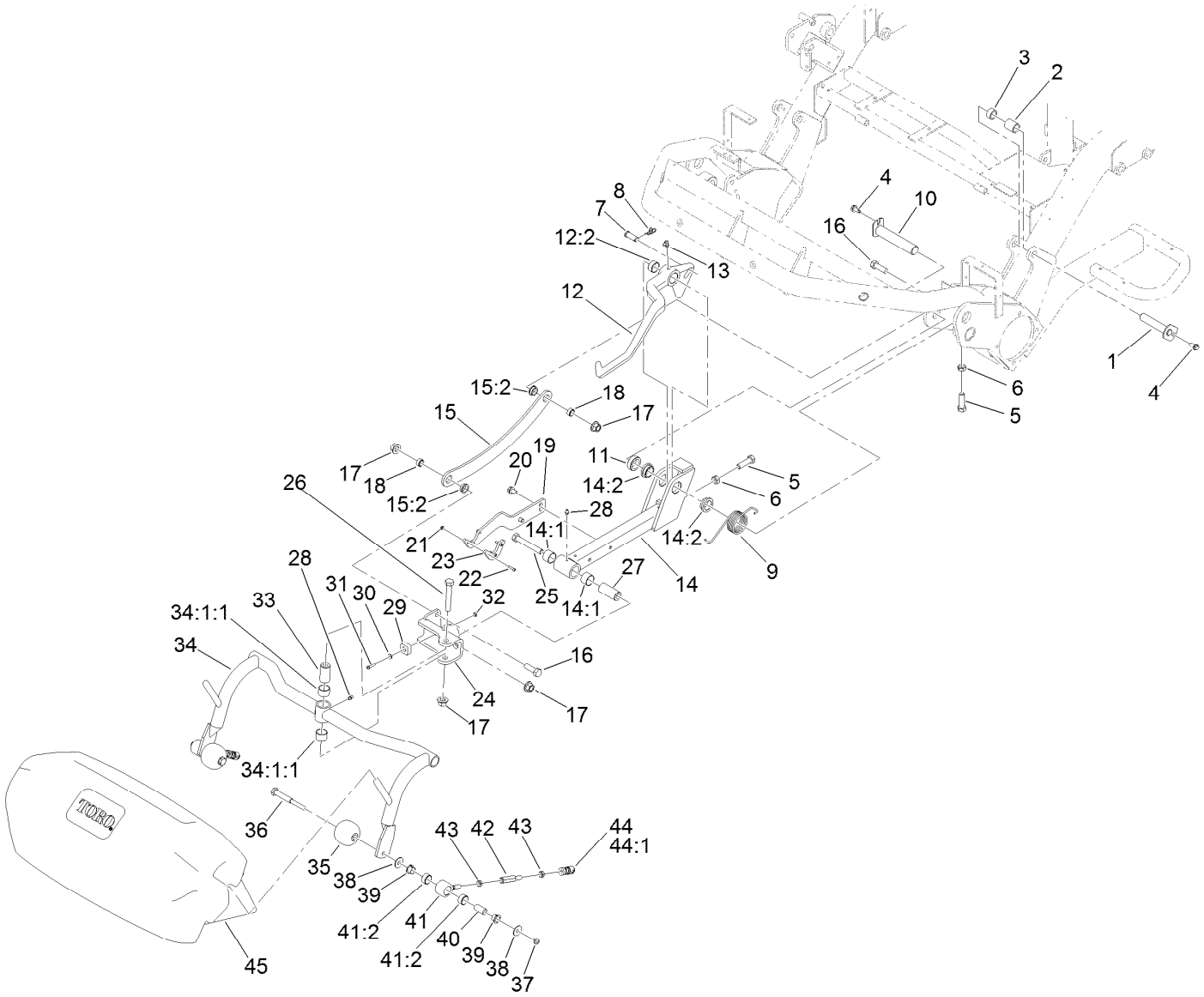

Left Cutting Unit Suspension Assembly (continued)

Ref.	Part Number	Qty.	Description
33	99-4109	1	Spacer
34	136-8577	1	Pull Frame ASM
34:1:1	98-4166	2	Bushing
35	99-4210	2	Roller-Anti Scalp
36	108-6543	2	Shaft-Roller
37	3296-59	2	Nut-Lock, NI
38	119-4150	4	Washer-Flat
39	104-7738	4	Bushing-Flange
40	108-6544	2	Spacer

Ref.	Part Number	Qty.	Description
41	139-6539	2	Pull Link ASM
41:2	95-0532	2	Rubber Bushing ASM
42	88-6870	2	Extension-Arm, Pull
43	3220-3	4	Nut-HJ
44	99-1460	2	Ball Joint Receiver ASM
44:1	99-1461	1	Sleeve-Joint, Ball
45	106-4689	1	Grass Basket ASM
45:2	104-2607	1	Strip-Basket ●
45:3	3290-382	8	Rivet-Pop ●

● Not illustrated

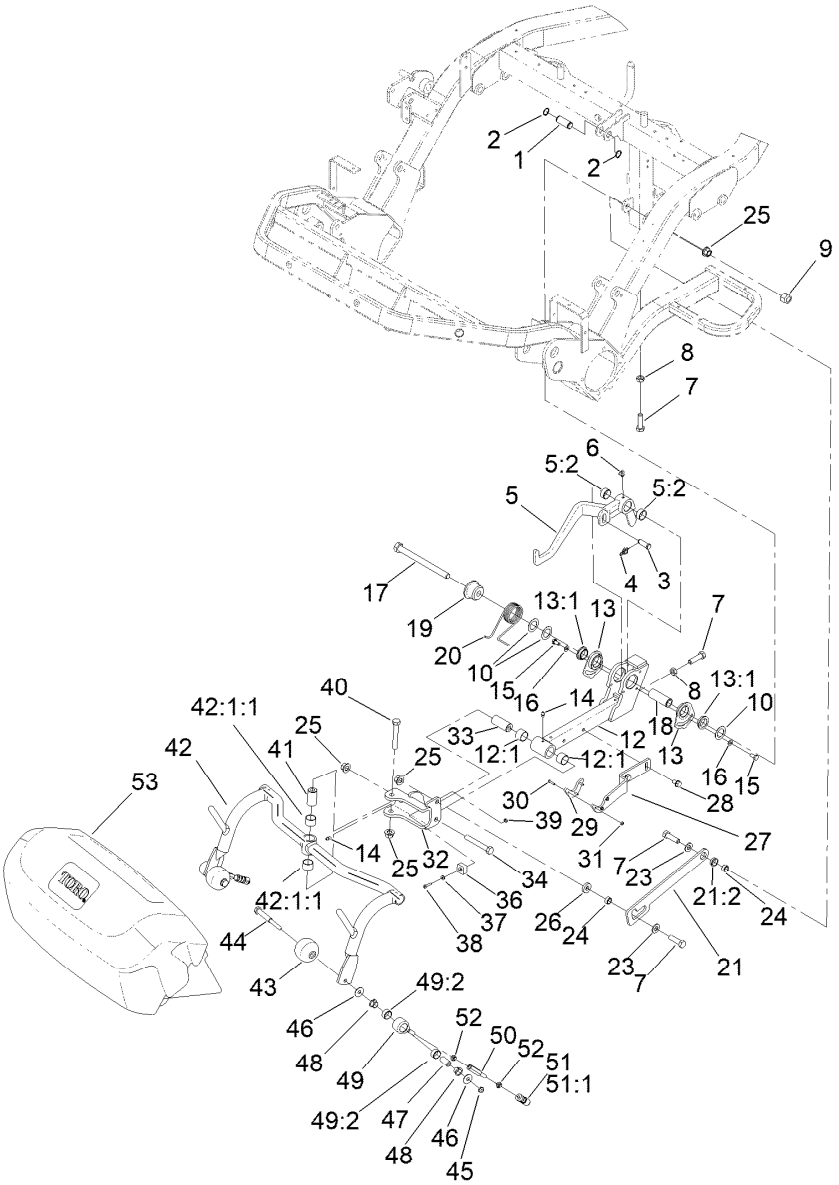

Center Cutting Unit Suspension Assembly

Ref.	Part Number	Qty.	Description
1	94-3452	1	Pin
2	32120-72	2	Ring-Snap
3	283-8	1	Pin-Clevis
4	112-1491	1	Pin-Cotter
5	99-4126	1	Center Lift Arm ASM
5:2	92-8995	2	Bushing
6	302-60	1	Fitting-Grease
7	325-7	4	Screw-HH
8	3218-5	2	Nut-Jam
9	3296-53	1	Nut-Lock, NI
10	63-2290	3	Washer-Thrust
12	99-4116	1	Rear Lift Frame ASM
12:1	98-4166	2	Bushing
13	140-6220	2	Eccentric Bushing ASM
13:1	98-2197	1	Bushing-Flange
14	302-5	2	Fitting-Grease
15	33114-016	2	Screw-HH
16	3256-74	2	Washer-Flat

Ref.	Part Number	Qty.	Description
17	327-25	1	Screw-HH
18	94-8199	1	Tube-Pivot
19	105-9779	1	Guide-Spring
20	105-9781	1	Spring-Torsion
21	99-4246	1	Link Bracket ASM
21:2	99-4243	1	Bushing-Flange
23	3256-26	2	Washer-Flat
24	99-4201	2	Tube-Spacer
25	99-5107	4	Nut-Lock
26	99-4248	1	Spacer
27	99-4111-01	1	Plate-Transport, 1 And 3
28	32144-69	2	Screw-HWHTF
29	99-4225	1	Pad-Wear
30	3250-17	3	Screw-PPH
31	3296-54	3	Nut-Lock
32	99-4183-01	1	RH Clevis ASM
33	99-4072	1	Spacer
34	325-14	1	Screw-HH

● Not illustrated

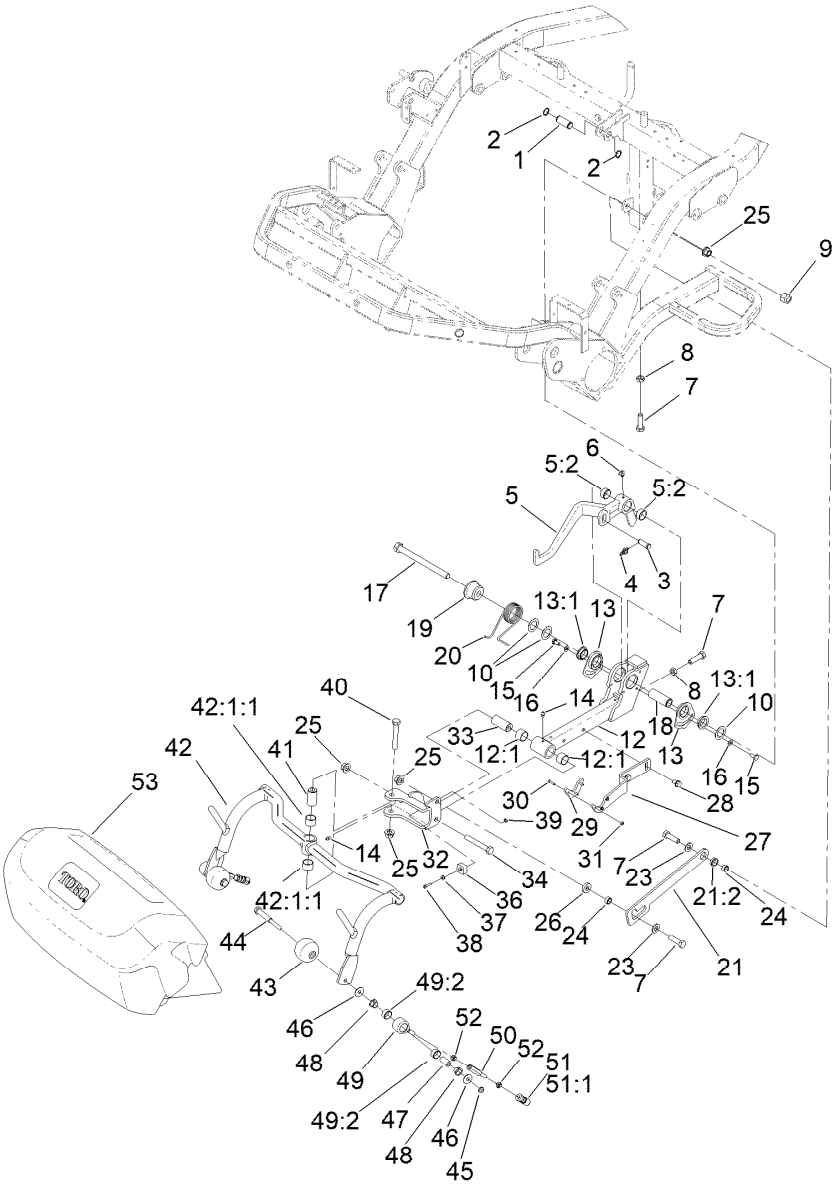

Center Cutting Unit Suspension Assembly (continued)

Ref.	Part Number	Qty.	Description
36	94-1392	1	Pad-Rubber
37	3256-14	1	Washer-Flat
38	3250-27	1	Screw-PPH
39	3296-12	1	Nut-Lock, NI
40	325-13	1	Screw-HH
41	99-4109	1	Spacer
42	136-8577	1	Pull Frame ASM
42:1:1	98-4166	2	Bushing
43	99-4210	2	Roller-Anti Scalp
44	108-6543	2	Shaft-Roller
45	3296-59	2	Nut-Lock, NI
46	119-4150	4	Washer-Flat

Ref.	Part Number	Qty.	Description
47	108-6544	2	Spacer
48	104-7738	4	Bushing-Flange
49	139-6539	2	Pull Link ASM
49:2	95-0532	2	Rubber Bushing ASM
50	88-6870	2	Extension-Arm, Pull
51	99-1460	2	Ball Joint Receiver ASM
51:1	99-1461	1	Sleeve-Joint, Ball
52	3220-3	4	Nut-HJ
53	106-4689	1	Grass Basket ASM
53:2	104-2607	1	Strip-Basket ●
53:3	3290-382	8	Rivet-Pop ●

● Not illustrated

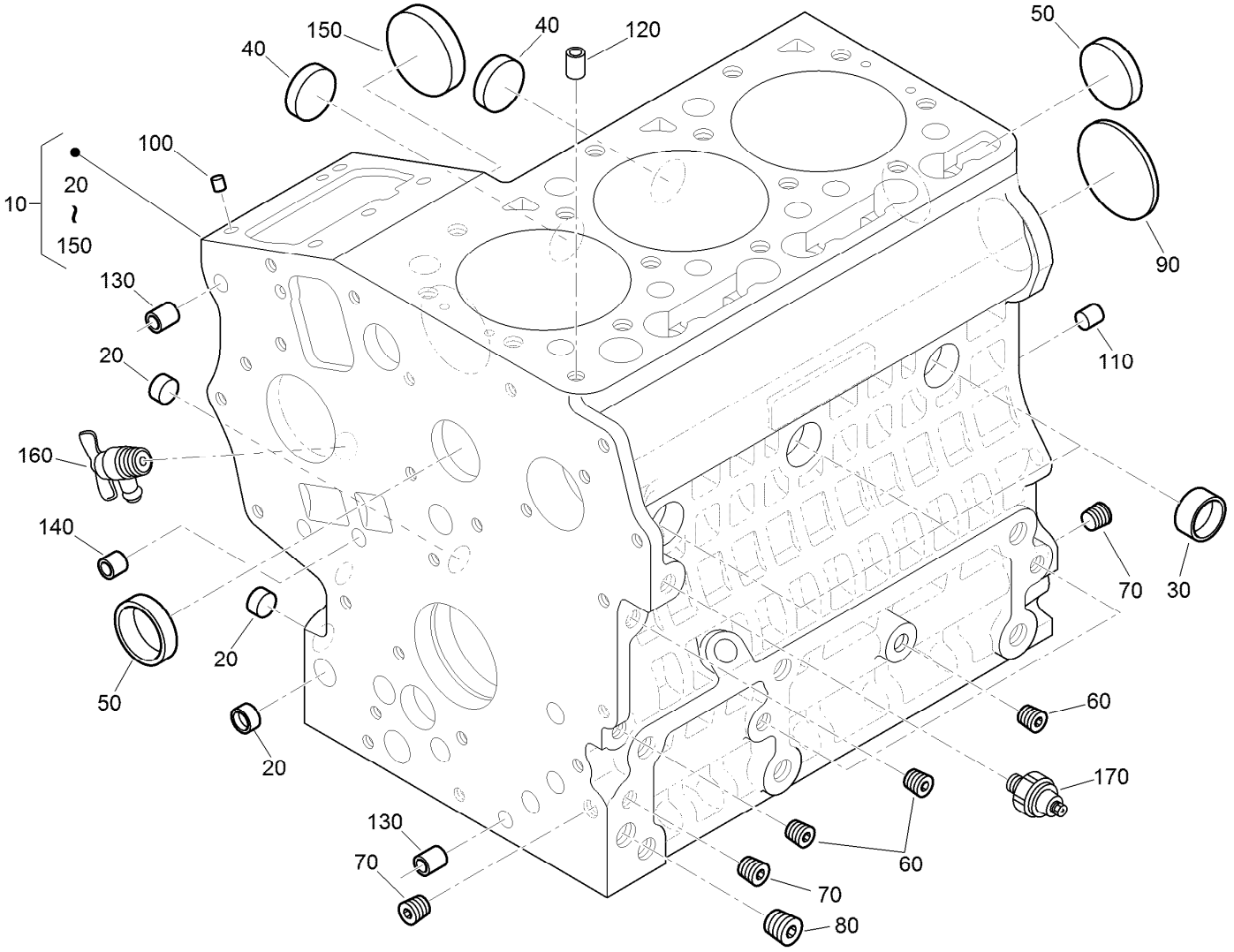

Crankcase Assembly

Ref.	Part Number	Qty.	Description
10	130-1385	1	Crankcase ASM
20	100-2019	3	Cap-Sealing
30	100-2020	3	Cap-Sealing
40	110-3702	2	Cap-Sealing
50	98-9398	2	Cap-Sealing
60	98-9687	5	Plug
70	98-7487	3	Plug
80	98-7488	1	Plug
90	100-1851	1	Plug-Expansion

Ref.	Part Number	Qty.	Description
100	98-9375	2	Pin-Straight
110	98-9377	2	Pin-Straight
120	98-7506	1	Pin-Pipe
130	100-2051	2	Pin-Pipe
140	100-2051	2	Pin-Pipe
150	100-1991	1	Cover-Fuel, Camshaft
160	120-3121	1	Draincock ASM
170	98-7764	1	Switch-Oil

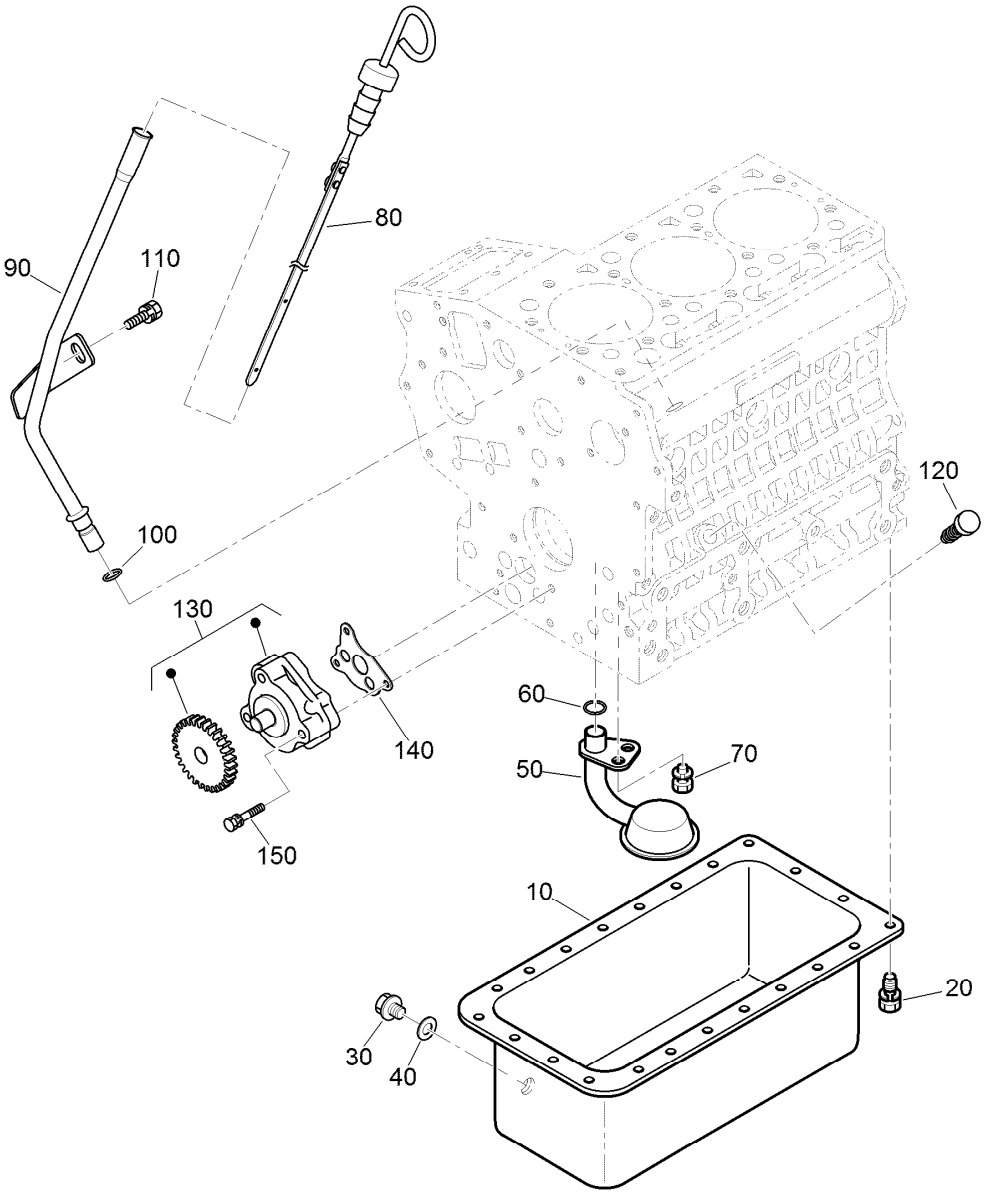

Oil Pan, Oil Pump and Dipstick Assembly

Ref.	*Part Number*	*Qty.*	*Description*
10	120-3122	1	Oil Pan ASM
20	98-9350	22	Bolt
30	114-8151	1	Plug-Drain
40	98-7524	1	Gasket
50	100-2001	1	Strainer-Pickup, Oil
60	105-3776	1	O-Ring
70	100-9195	1	Bolt
80	120-3124	1	Gauge-Oil
90	120-3125	1	Guide-Gauge, Oil
100	98-9722	1	O-Ring
110	115-8504	1	Bolt-Flange
120	110-3720	1	Plug-Gauge, Oil
130	121-2407	1	Oil Pump ASM
140	121-2408	1	Gasket-Pump, Oil
150	100-1923	3	Bolt

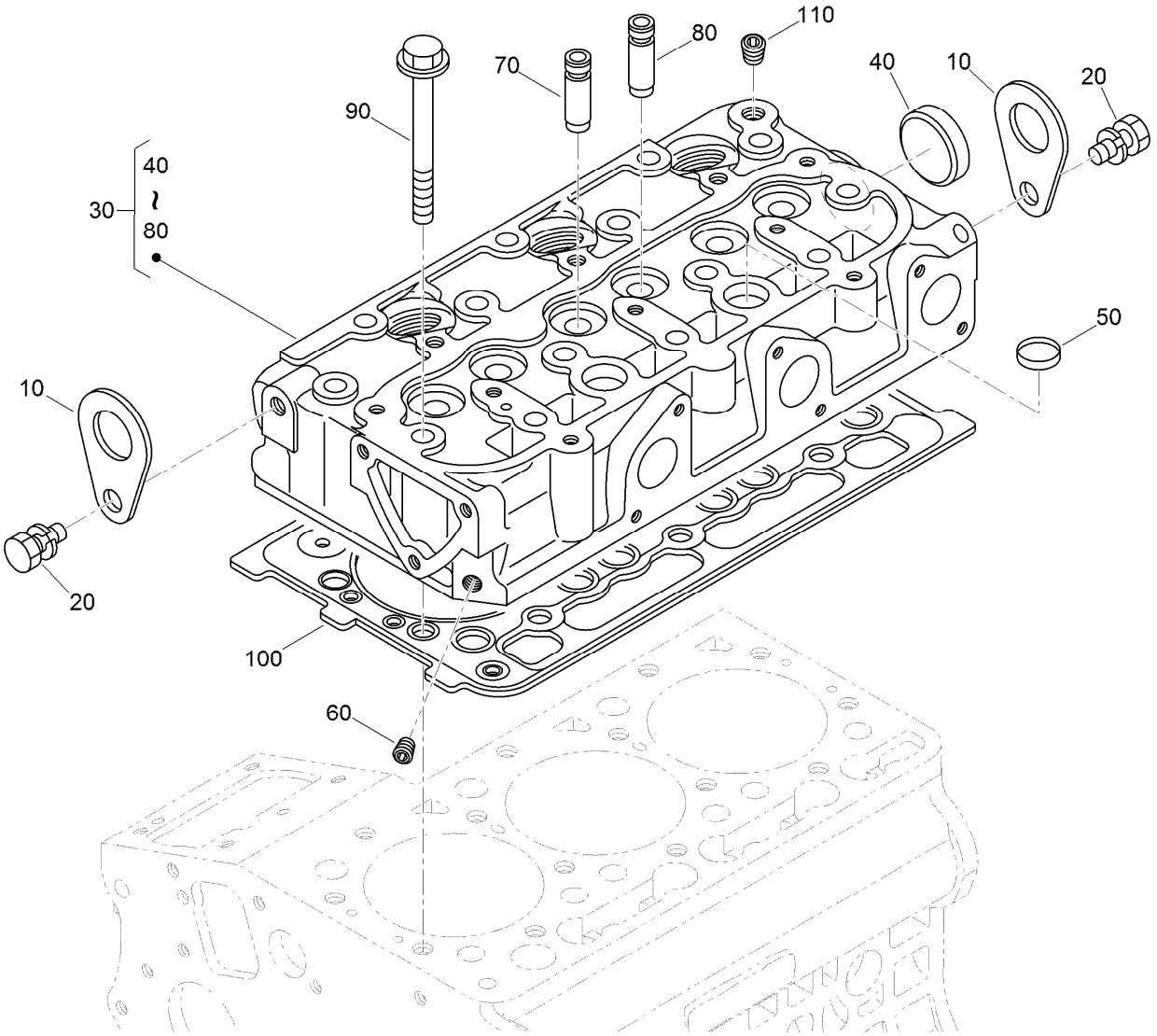

Cylinder Head Assembly

Ref.	*Part Number*	*Qty.*	*Description*
10	98-7531	2	Hook-Engine
20	98-7526	2	Bolt
30	130-1504	1	Cylinder Head ASM
40	105-3705	1	Cap-Sealing
50	98-9389	2	Cap-Sealing
60	98-9687	1	Plug
70	100-1882	3	Guide-Valve, Inlet
80	100-1883	3	Guide-Valve, Exhaust
90	100-1820	14	Bolt-Head, Cylinder
100	112-2520	1	Gasket-Head, Cylinder
110	98-9444	1	Plug

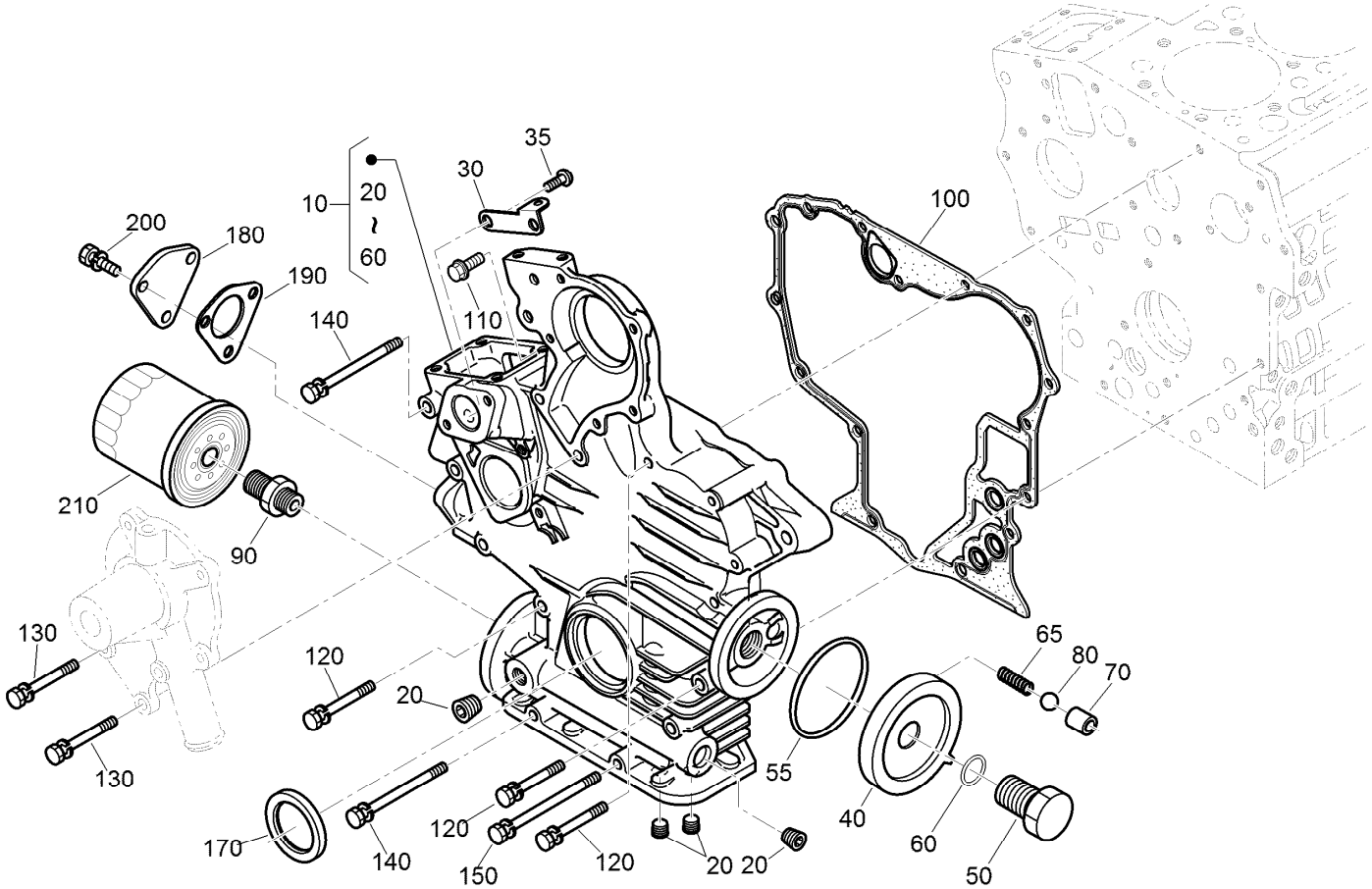

Gear Case and Oil Filter Cartridge Assembly

Ref.	Part Number	Qty.	Description
10	121-2401	1	Gearcase ASM
20	98-7488	4	Plug
30	110-3708	1	Stay-Spring, Start
35	100-2040	2	Screw
40	121-2402	1	Cover
50	121-2403	1	Bolt
55	98-9729	1	O-Ring
60	105-3777	1	O-Ring
65	100-2004	1	Spring
70	100-1894	1	Seat-Valve
80	100-1792	1	Ball
90	98-9388	1	Joint-Pipe

Ref.	Part Number	Qty.	Description
100	121-2404	1	Gasket-Gearcase
110	127-0403	1	Bolt-Flange
120	125-9063	8	Bolt-Sems
130	100-1922	2	Bolt
140	98-9357	3	Bolt
150	110-3710	1	Bolt
170	120-7852	1	Seal-Oil
180	121-2405	1	Cover
190	121-2406	1	Packing-Flange
200	98-7605	3	Bolt
210	115-8189	1	Filter-Oil, Engine

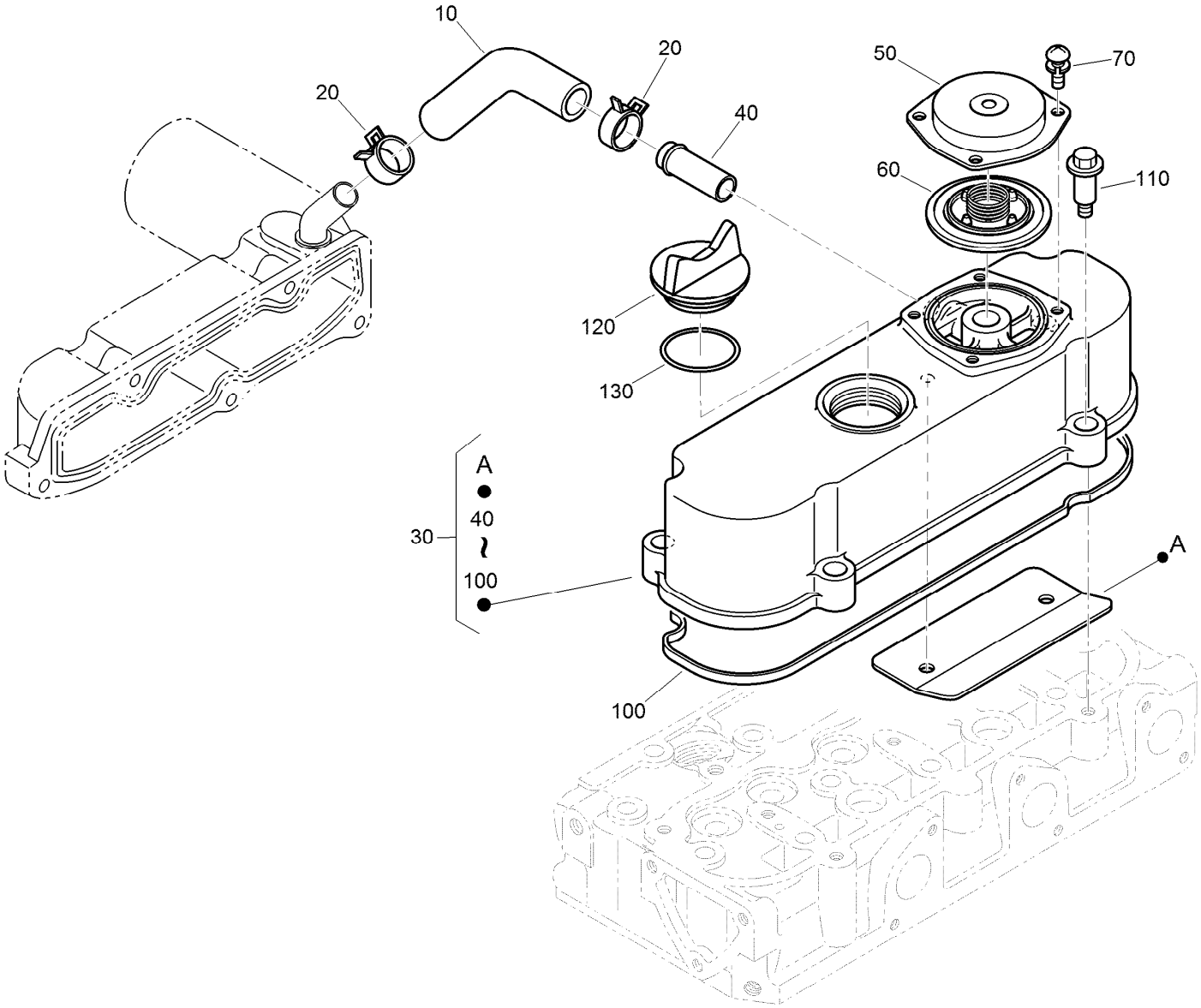

Cylinder Head Cover Assembly

Ref.	Part Number	Qty.	Description
10	120-3139	1	Tube-Breather
20	110-3712	2	Clamp-Hose
30	112-8332	1	Cylinder Head Cover ASM
40	98-9580	1	Pipe-Return, Water
50	110-3714	1	Cover-Breather
60	110-3715	1	Valve-Breather
70	98-9364	4	Screw (With Washer)
100	112-2521	1	Gasket-Cover, Head
110	108-7063	4	Bolt
120	107-9075	1	Plug-Filler, Oil
130	99-3446	1	O-Ring

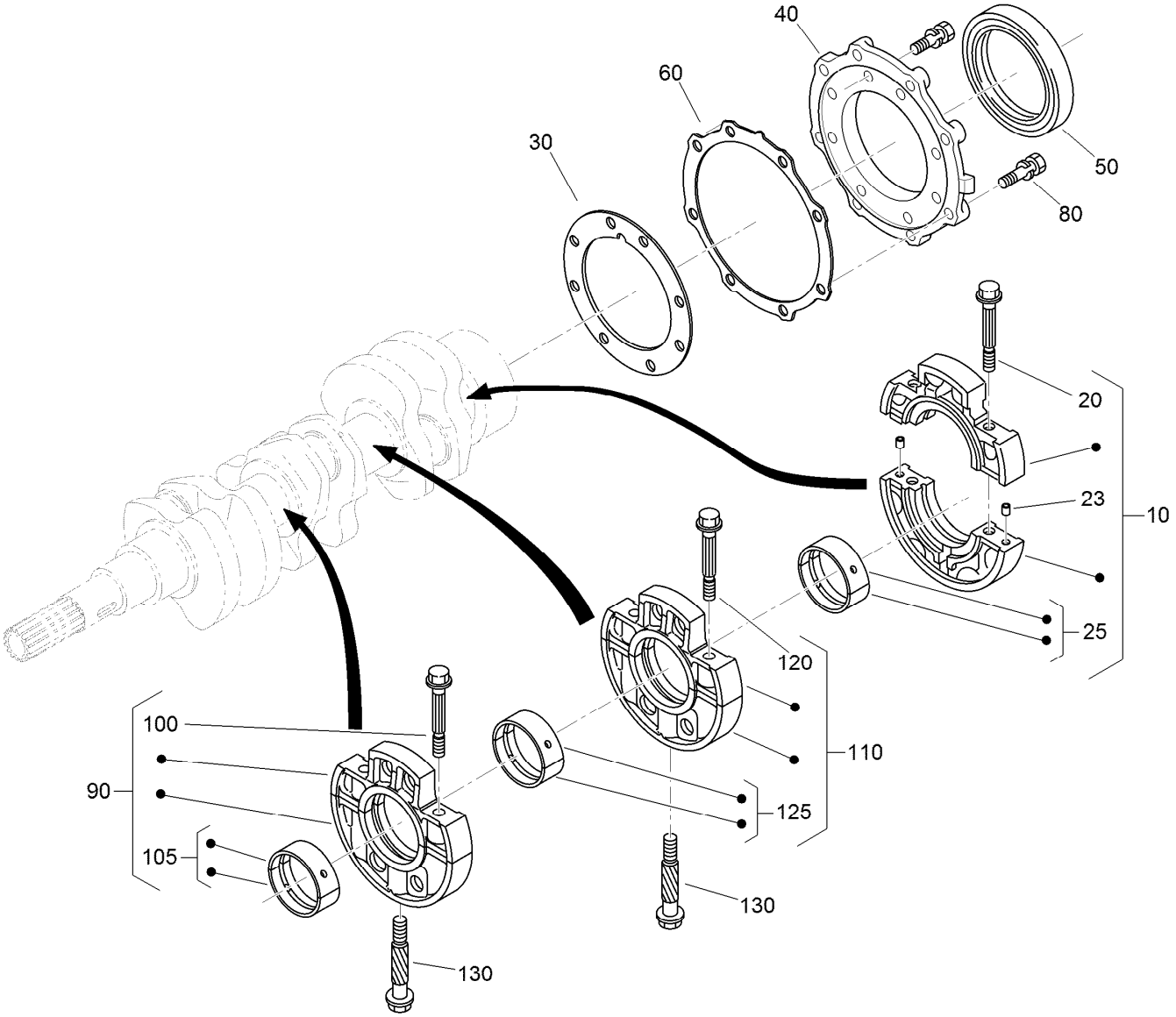

Main Bearing Case Assembly

Ref.	Part Number	Qty.	Description
10	125-9064	1	Wheel Bearing Case ASM
20	125-9065	2	Bolt-Flange
23	125-9082	2	Pin-Straight
25	125-9066	1	Crankshaft Metal ASM (STD)
25	125-9067	1	Crankshaft Metal ASM (-0.20Mm)
25	125-9068	1	Crankshaft Metal ASM (-0.40Mm)
30	100-1873	1	Gasket-Case, Bearing
40	112-8334	1	Cover-Case, Bearing
50	110-3724	1	Seal-Oil
60	100-1876	1	Gasket-Cover, Case
80	100-1750	16	Bolt
90	110-3725	1	Main Bearing Case ASM
100	110-3723	2	Bolt-Case, Bearing

Ref.	Part Number	Qty.	Description
105	110-3741	1	Crankshaft Metal ASM (STD)
105	125-9083	1	Crankshaft Metal ASM (-0.20Mm)
105	110-3743	1	Crankshaft Metal ASM (-0.40Mm)
110	125-9069	1	Main Case Bearing ASM
120	110-3723	2	Bolt-Case, Bearing
125	110-3741	1	Crankshaft Metal ASM (STD)
125	125-9083	1	Crankshaft Metal ASM (-0.20Mm)
125	110-3743	1	Crankshaft Metal ASM (-0.40Mm)
130	100-1874	2	Bolt-Case, Bearing

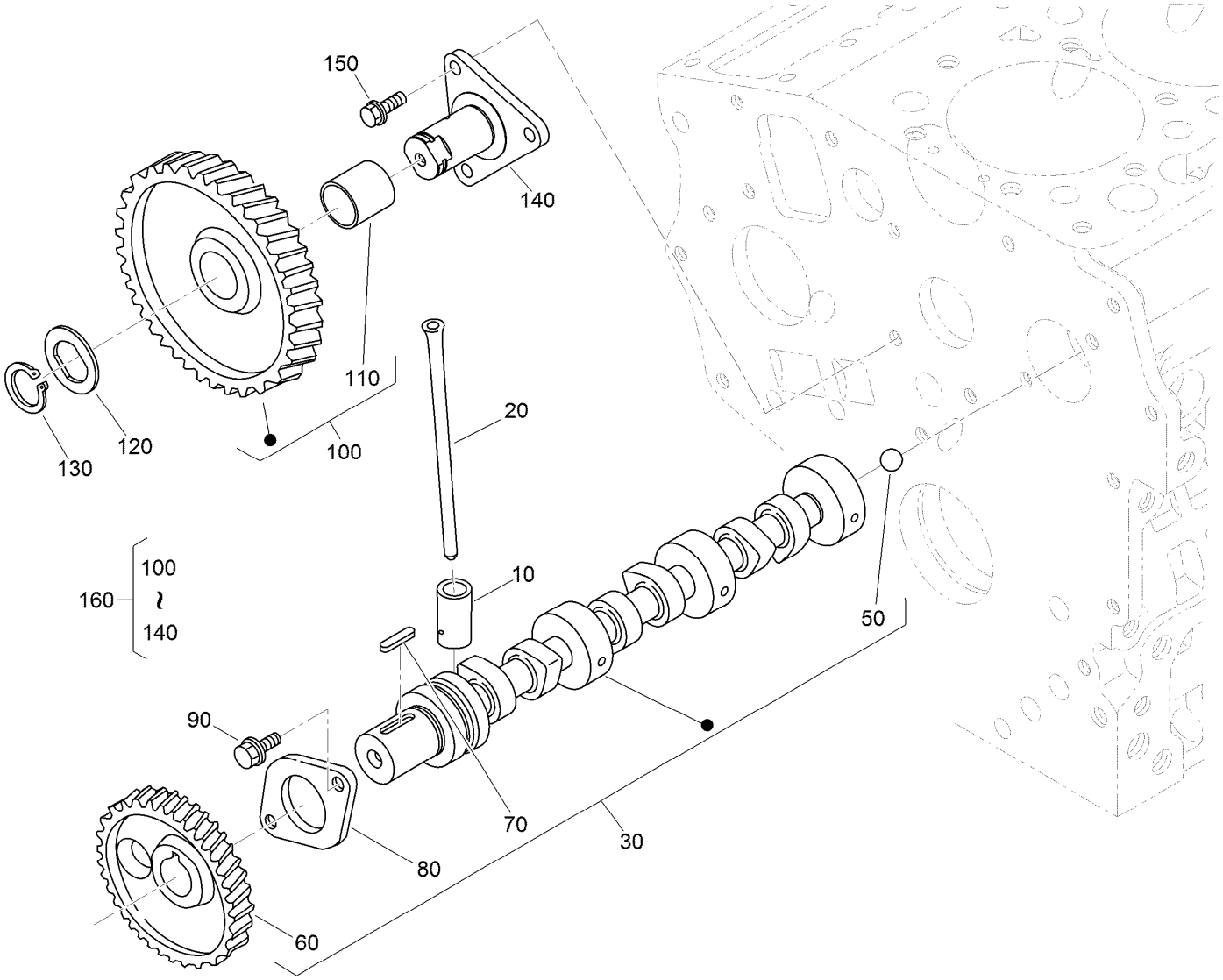

Camshaft and Idle Gear Shaft Assembly

Ref.	Part Number	Qty.	Description
10	110-3727	6	Tappet
20	100-1989	6	Rod-Push
30	120-3126	1	Camshaft ASM
50	110-3729	1	Ball
60	130-1534	1	Gear-Cam
70	98-9378	1	Key-Feather
80	100-1887	1	Stopper-Camshaft
90	98-9350	2	Bolt
100	121-2421	1	Idle Gear ASM
110	121-2422	1	Bushing
120	100-1970	1	Collar-Gear, Idle
130	100-1969	1	Ring-Snap
140	100-1967	1	Shaft-Gear, Idle
150	100-1774	3	Bolt-Flange
160	100-2240	1	Idle Gear ASM

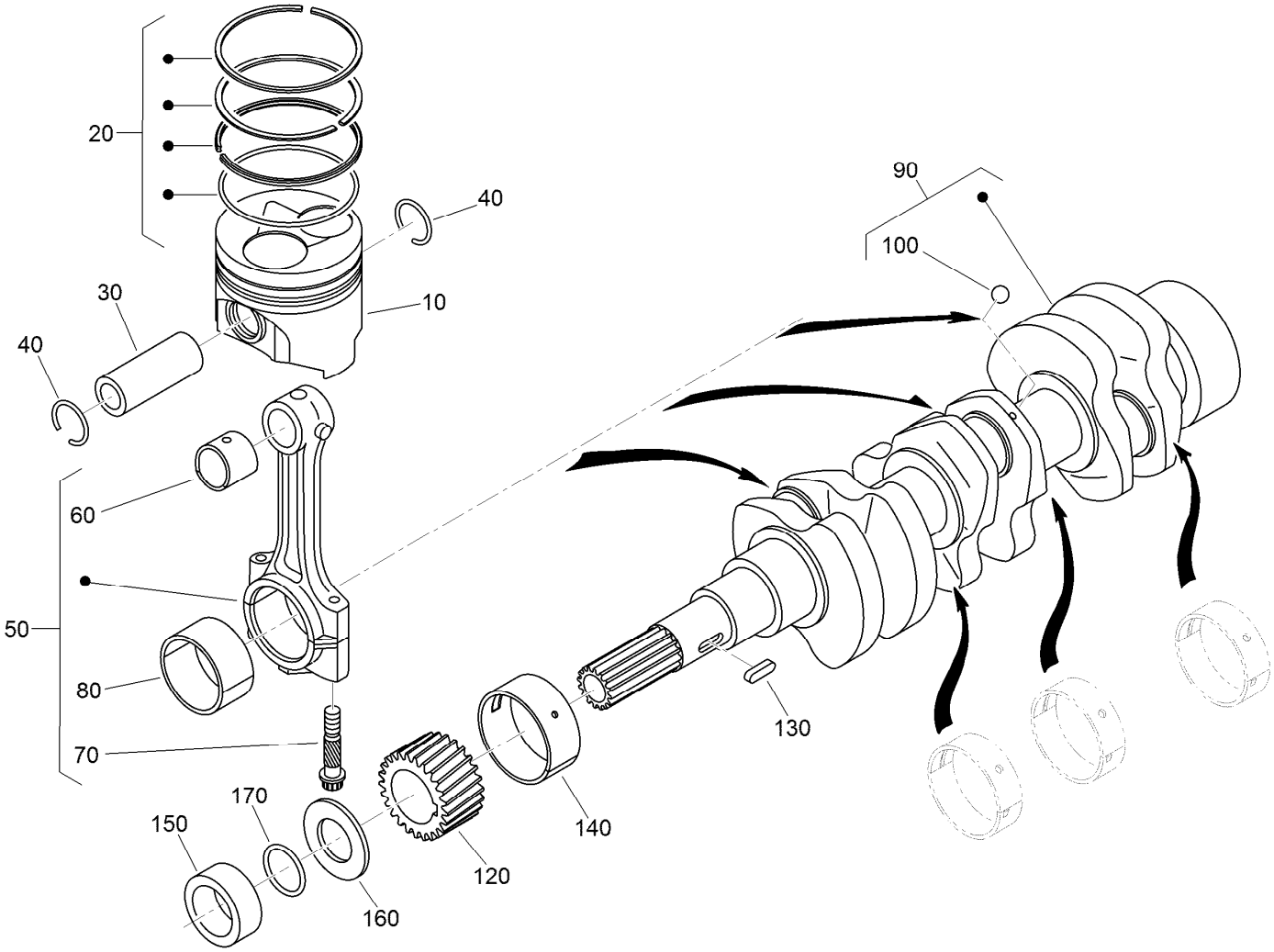

Piston and Crankshaft Assembly

Ref.	Part Number	Qty.	Description
10	130-1518	3	Piston
10	130-1520	3	Piston
20	130-1516	3	Piston Ring ASM
20	130-1517	3	Piston Ring ASM
30	110-3734	3	Pin-Piston
40	100-1835	6	Circlip-Internal
50	125-9070	3	Connecting Rod ASM
60	110-3736	3	Bushing-Pin, Piston
70	100-1999	6	Bolt-Rod, Connecting
80	100-2000	3	Metal-Crankpin (STD)
80	121-3849	3	Metal-Crankpin (-.20MM)

Ref.	Part Number	Qty.	Description
80	121-2420	3	Metal-Crankpin (-.40MM)
90	117-0308	1	Crankshaft
100	100-1791	3	Ball
120	100-1891	1	Gear-Crankshaft
130	100-1752	1	Key-Feather
140	110-3738	1	Metal-Crankshaft (STD)
140	121-2424	1	Metal-Crankshaft (-.20MM)
140	121-2425	1	Metal-Crankshaft (-.40MM)
150	100-1890	1	Collar-Crankshaft
160	100-1974	1	Slinger-Oil
170	100-2209	1	O-Ring

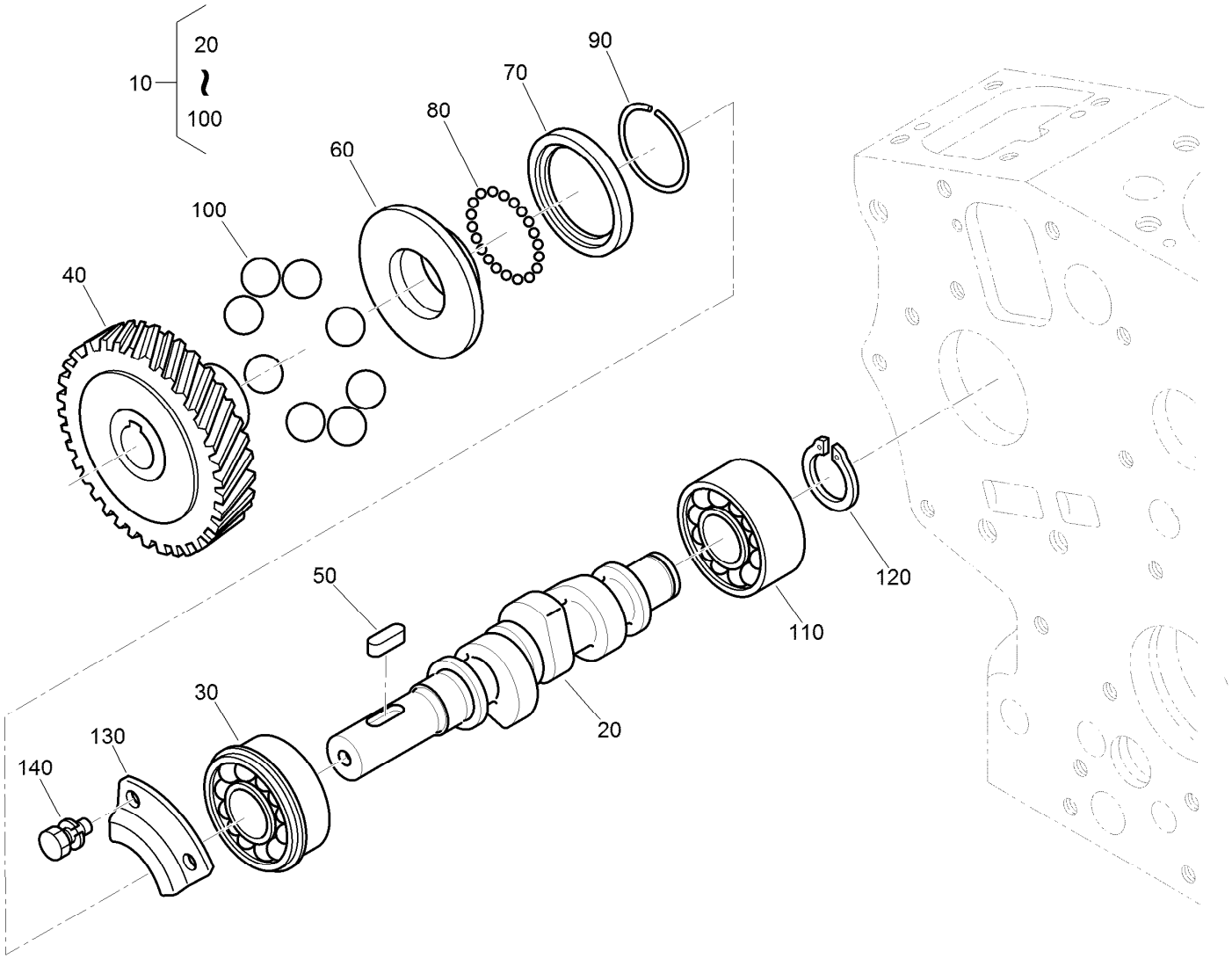

Fuel Camshaft Assembly

Ref.	Part Number	Qty.	Description
10	112-8335	1	Fuel Camshaft ASM
20	110-3756	1	Camshaft-Fuel
30	100-1795	1	Bearing-Ball
40	100-2006	1	Gear-Pump, Injection
50	100-1752	1	Key-Feather
60	112-8336	1	Sleeve-Governor
70	100-1904	1	Case-Ball, Governor
80	100-1790	32	Ball
90	100-1843	1	Circ-Clip
100	100-1793	8	Ball
110	110-3757	1	Bearing-Ball
120	100-1784	1	Circ-Clip, External
130	100-1888	1	Stopper-Fuel, Camshaft
140	98-9350	2	Bolt

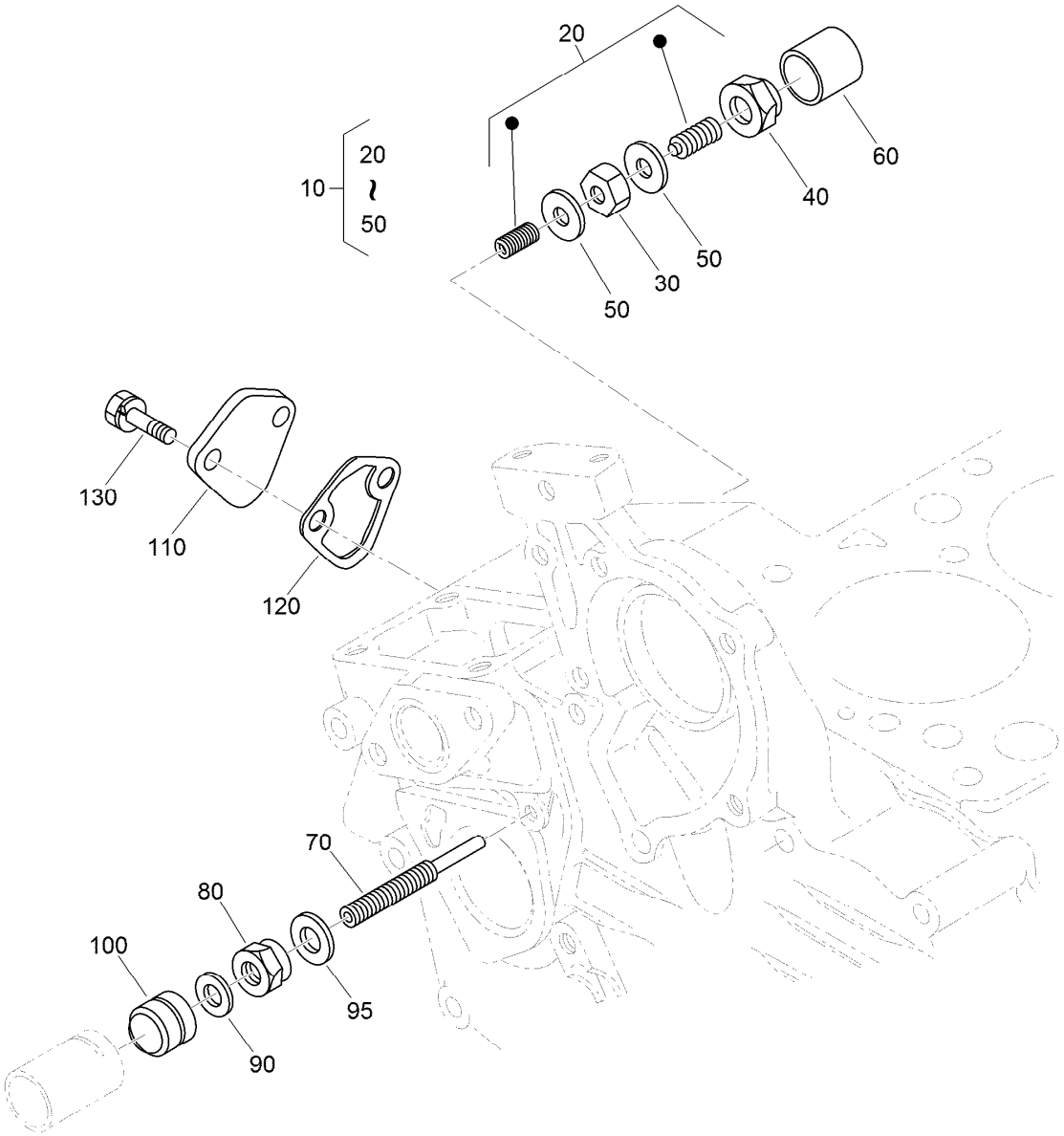

Idle Apparatus and Fuel Pump Cover Assembly

Ref.	*Part Number*	*Qty.*	*Description*
10	100-1898	1	Idle Apparatus ASM
20	100-1899	1	Adjusting Bolt ASM
30	100-1846	1	Nut
40	100-1901	1	Nut-Cap
50	98-7428	2	Gasket
60	100-1902	1	Cap
70	110-3758	1	Bolt-Adjusting
80	100-2175	1	Nut-Lock
90	98-7654	1	Gasket
95	107-9081	1	Gasket
100	99-8387	1	Nut-Cap
110	99-3514	1	Cover
120	98-9636	1	Gasket-Pump, Fuel
130	98-7692	2	Bolt

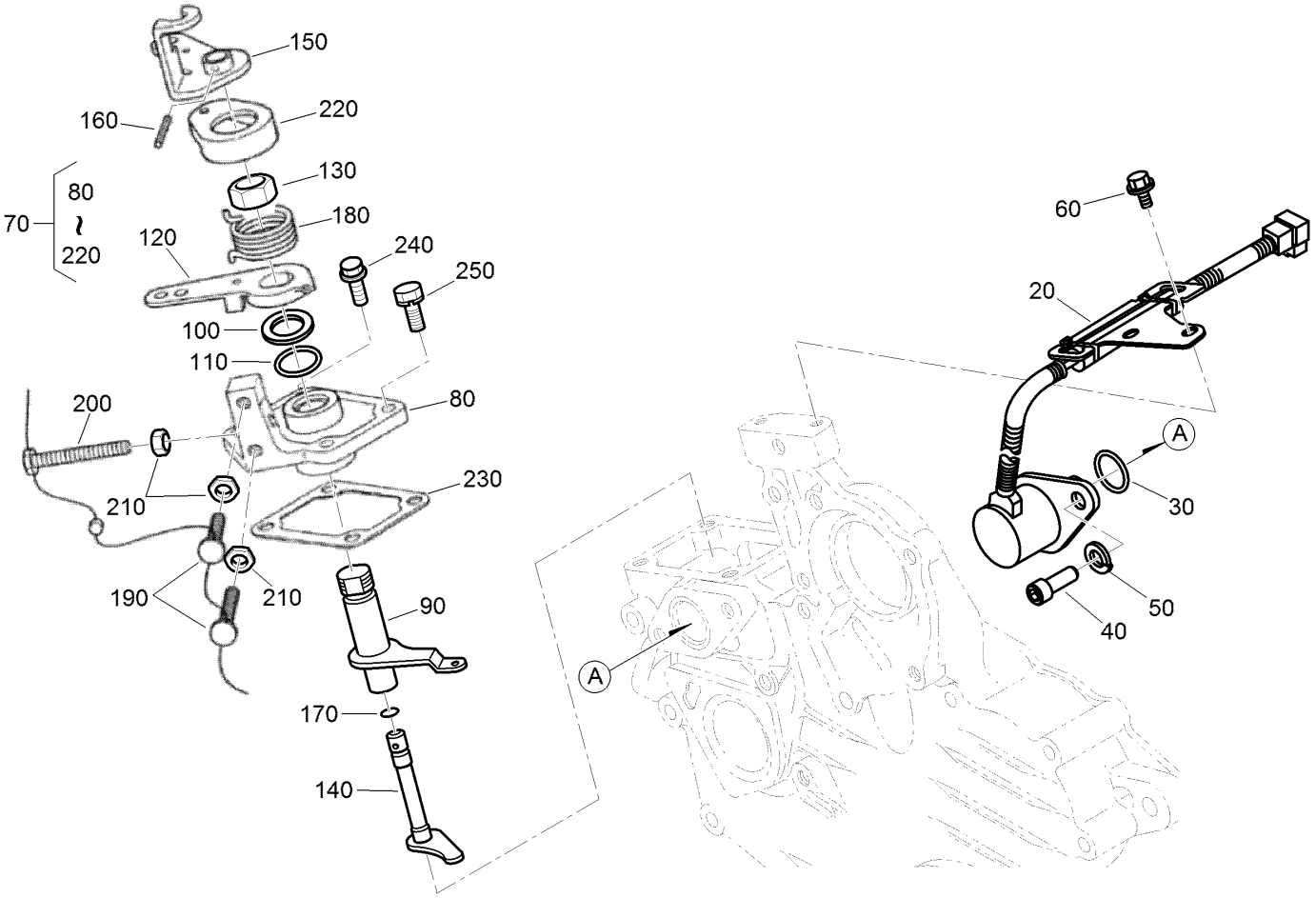

Stop Solenoid and Speed Control Plate Assembly

Ref.	Part Number	Qty.	Description
20	117-2719	1	Solenoid Stop ASM
30	110-3762	1	O-Ring
40	110-3763	2	Bolt-HSH
50	98-7699	2	Washer-Spring
60	100-1774	2	Bolt-Flange
70	110-3769	1	Speed Control Plate ASM
80	110-3770	1	Plate-Control, Speed
90	110-3771	1	Lever-Governor
100	110-3772	1	Collar
110	100-2208	1	O-Ring
120	110-3773	1	Lever-Control, Speed
130	110-3774	1	Nut-Control, Speed

Ref.	Part Number	Qty.	Description
140	110-3775	1	Shaft-Lever
150	110-3776	1	Lever-Stop, Engine
160	110-3777	1	Pin-Spring
170	100-2207	1	O-Ring
180	110-3778	1	Spring-Return
190	120-3133	2	Screw-Stopper
200	120-3134	1	Bolt
210	98-7572	3	Nut
220	110-3779	1	Cap
230	100-1962	1	Gasket-Plate, Control
240	127-0403	2	Bolt-Flange
250	112-2507	2	Bolt

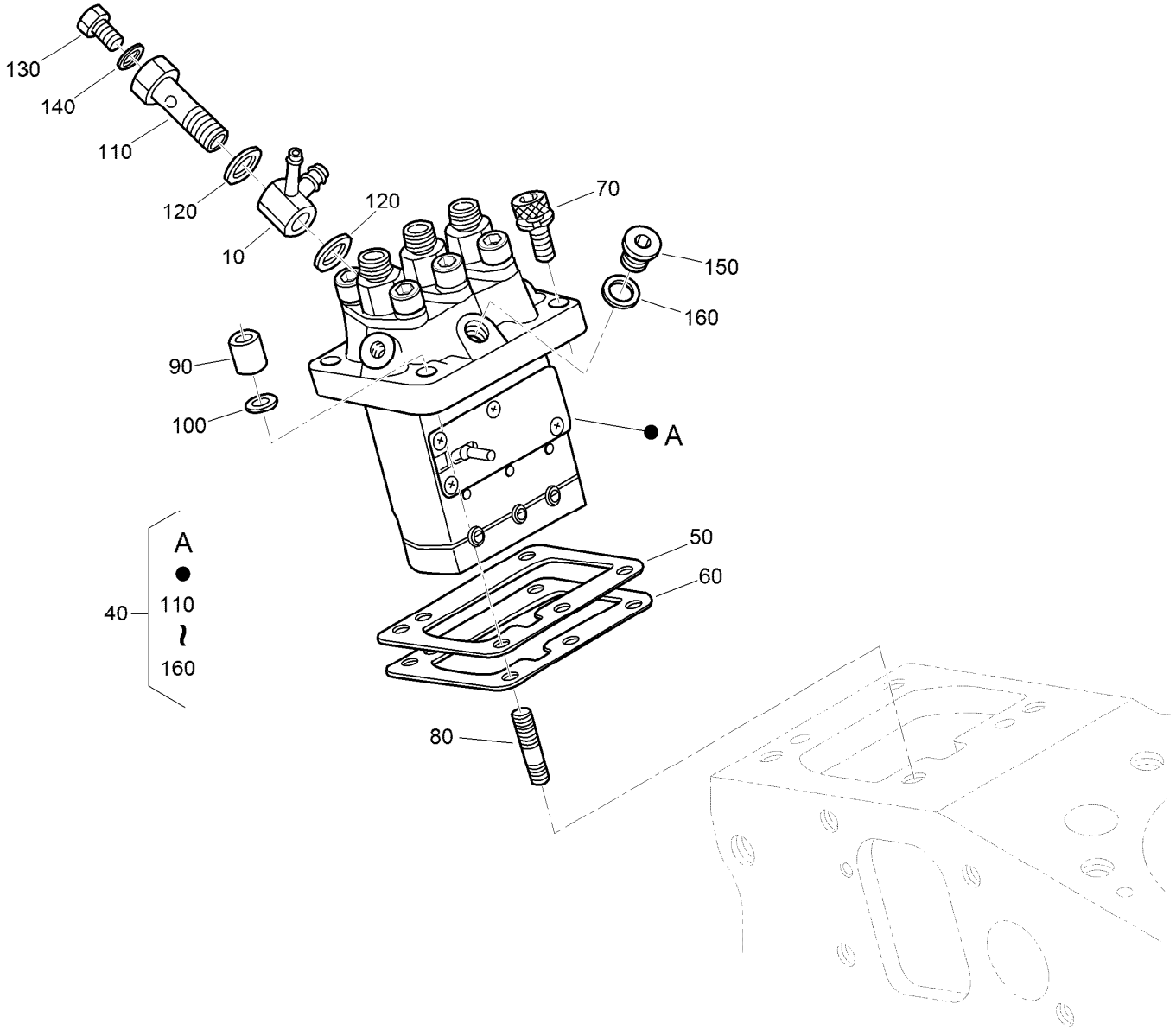

Injection Pump Assembly

Ref.	Part Number	Qty.	Description
10	110-3764	1	Joint
40	110-3765	1	Injection Pump ASM
50	115-3045	1	Shim-Injection (0.175MM)
50	98-9456	1	Shim-Injection (0.20MM)
50	98-9457	1	Shim-Injection (0.25MM)
60	98-9458	1	Shim-Injection (0.30MM)
60	115-3046	1	Shim-Injection (0.35MM)
70	117-7564	2	Bolt-Hex Soc HD
80	98-9438	2	Stud

Ref.	Part Number	Qty.	Description
90	98-9440	2	Nut-Cap
100	98-7699	2	Washer-Spring
110	100-1896	1	Screw-Hollow
120	98-9445	2	Gasket
130	98-9430	1	Screw
140	98-9446	1	Gasket
150	98-9466	1	Plug
160	98-9451	1	Gasket

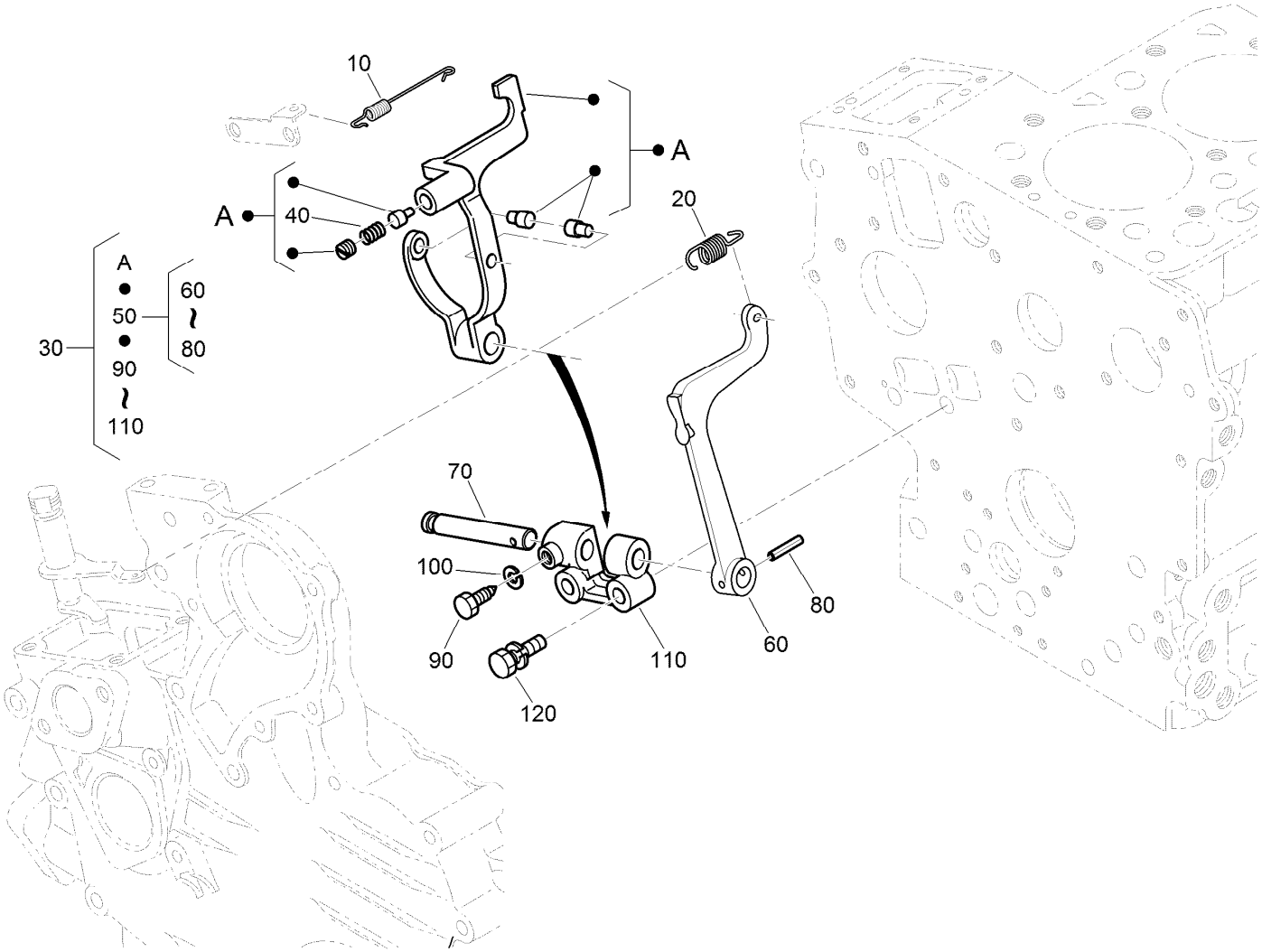

Governor Assembly

Ref.	Part Number	Qty.	Description
10	110-3766	1	Spring-Start
20	130-1220	1	Spring-Governor
30	121-3822	1	Fork Lever ASM
40	121-2410	1	Spring
50	100-1905	1	Fork Lever ASM
60	100-1907	1	Lever-Fork
70	100-1908	1	Shaft-Lever, Fork
80	100-1751	1	Pin-Spring
90	100-1845	1	Bolt
100	127-0408	1	Washer-Lock, Spring
110	100-1909	1	Holder-Lever, Fork
120	100-1763	2	Bolt

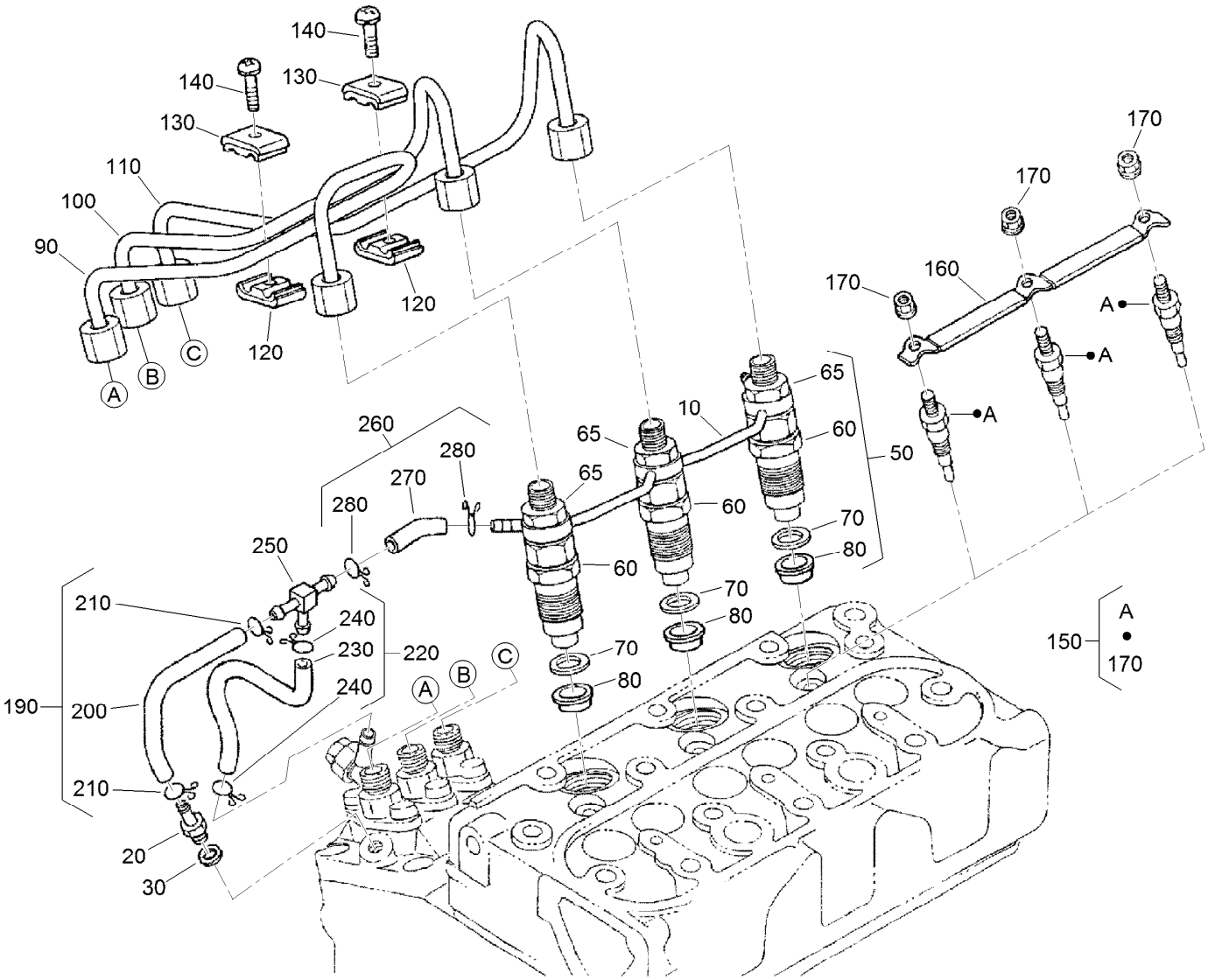

Nozzle Holder and Glow Plug Assembly

Ref.	Part Number	Qty.	Description
10	110-3780	1	Over Flow Pipe ASM
20	98-9431	1	Screw-Bleeder, Air
30	98-7654	1	Gasket
50	130-1305	3	Nozzle Holder Kit
60	130-1303	3	Nozzle Holder ASM
65	121-2411	3	Nut
70	98-7676	3	Gasket
80	98-7677	3	Seal-Heat
90	130-1522	1	Pipe-Injection
100	130-1523	1	Pipe-Injection
110	130-1541	1	Pipe-Injection
120	98-7682	2	Clamp-Pipe
130	98-7683	2	Clamp-Pipe
140	98-7684	2	Screw (W/Washer)

Ref.	Part Number	Qty.	Description
150	130-1411	3	Plug-Glow
160	110-3784	1	Cord-Plug, Glow
170	99-8377	3	Nut-Flange
190	110-3785	1	Fuel Tube ASM
200	110-3786	1	Tube-Fuel
210	98-7671	2	Clip-Pipe
220	110-3787	1	Fuel Tube ASM
230	110-3788	1	Tube-Fuel
240	98-7671	2	Clip-Pipe
250	112-8338	1	Pipe-Joint, T
260	110-3790	1	Fuel Tube ASM
270	110-3791	1	Tube-Fuel
280	98-7671	2	Clip-Pipe

Nozzle Holder Assembly

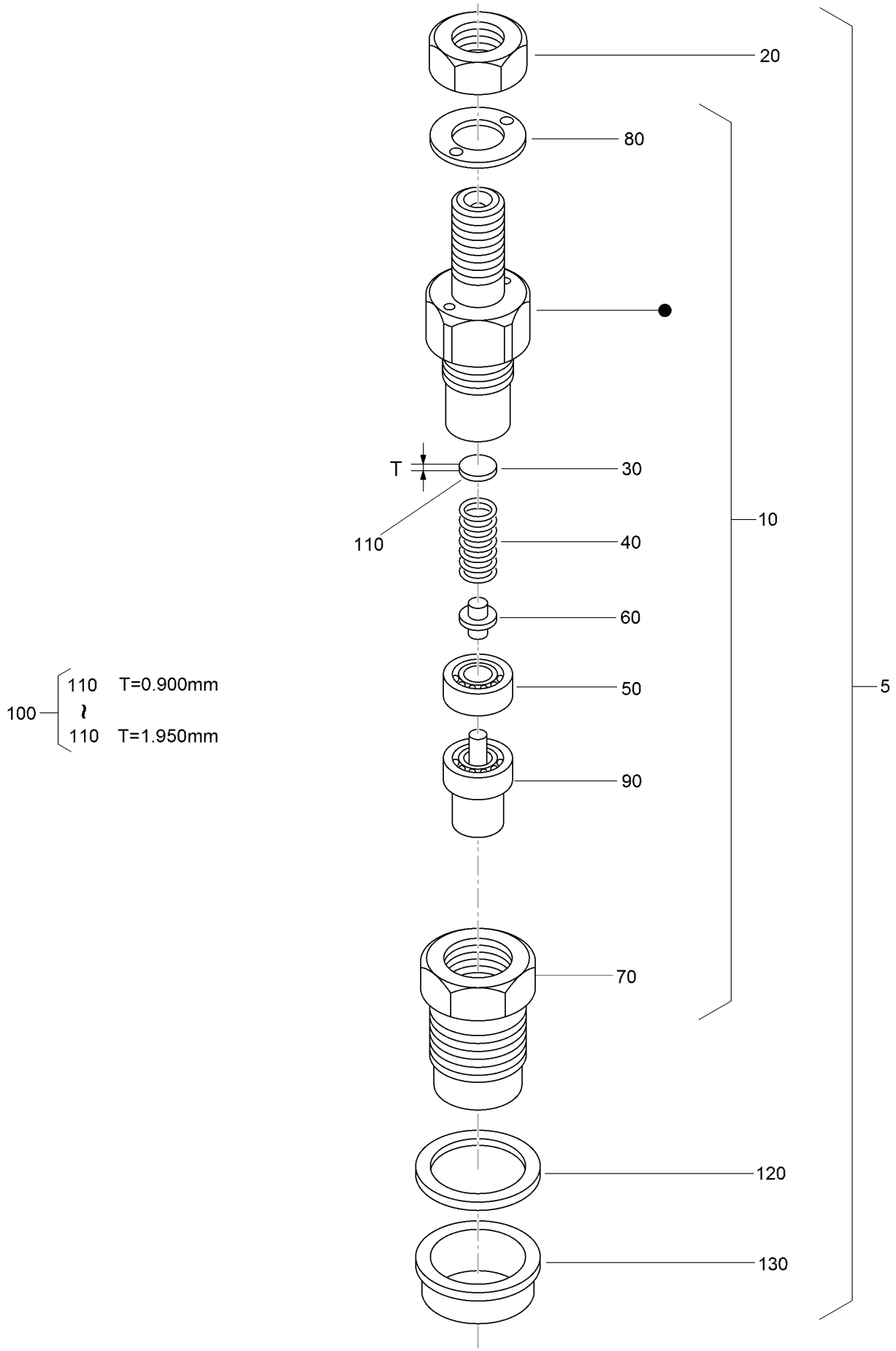

Nozzle Holder Assembly (continued)

Ref.	Part Number	Qty.	Description
5	130-1305	3	Nozzle Holder Kit
10	130-1303	3	Nozzle Holder ASM
20	121-2411	3	Nut
30	99-8302	3	Washer-Adjusting
40	99-8303	3	Spring-Nozzle
50	99-8304	3	Spacer-Distance
60	99-8305	3	Rod-Push
70	130-1304	3	Nut-Nozzle
80	99-8307	3	Washer-Plain
90	130-1497	3	Nozzle-Piece
100	98-9448	3	Adjusting Washer ASM
110	98-7642	3	Washer-Adjusting (0.900Mm)
110	98-7841	3	Washer-Adjusting (0.925Mm)
110	98-7842	3	Washer-Adjusting (0.950Mm)
110	98-7843	3	Washer-Adjusting (0.975Mm)
110	98-7844	3	Washer-Adjusting (1.000Mm)
110	98-7845	3	Washer-Adjusting (1.025Mm)
110	98-7846	3	Washer-Adjusting (1.050Mm)
110	98-7847	3	Washer-Adjusting (1.075MM)
110	98-7848	3	Washer-Adjusting (1.100MM)
110	98-7849	3	Washer-Adjusting (1.125MM)
110	98-7850	3	Washer-Adjusting (1.150MM)
110	98-7851	3	Washer-Adjusting (1.175MM)
110	98-7852	3	Washer-Adjusting (1.200MM)
110	98-7853	3	Washer-Adjusting (1.225MM)
110	98-7854	3	Washer-Adjusting (1.250MM)
110	98-7855	3	Washer-Adjusting (1.275MM)
110	98-7856	3	Washer-Adjusting 1.300MM)
110	98-7857	3	Washer-Adjusting (1.325MM)
110	98-7858	3	Washer-Adjusting (1.350MM)
110	98-7859	3	Washer-Adjusting (1.375MM)
110	98-7860	3	Washer-Adjusting (1.400MM)
110	98-7861	3	Washer-Adjusting (1.425MM)
110	98-7862	3	Washer-Adjusting (1.450MM)
110	98-7863	3	Washer-Adjusting (1.475MM)
110	98-7864	3	Washer-Adjusting (1.500MM)
110	98-7865	3	Washer-Adjusting (1.525MM)
110	98-7866	3	Washer-Adjusting (1.550MM)
110	98-7867	3	Washer-Adjusting (1.575MM)
110	98-7868	3	Washer-Adjusting (1.600MM)
110	98-7869	3	Washer-Adjusting (1.625MM)
110	98-7870	3	Washer-Adjusting (1.650MM)
110	98-7871	3	Washer-Adjusting (1.675MM)
110	98-7872	3	Washer-Adjusting (1.700MM)
110	98-7873	3	Washer-Adjusting (1.725MM)
110	98-7874	3	Washer-Adjusting (1.750MM)
110	98-7875	3	Washer-Adjusting (1.775MM)
110	98-7876	33	Washer-Adjusting (1.800MM)
110	98-7877	3	Washer-Adjusting (1.825MM)
110	98-7878	3	Washer-Adjusting (1.850MM)
110	98-7879	3	Washer-Adjusting (1.875MM)
110	98-7880	3	Washer-Adjusting (1.900MM)
110	98-7881	3	Washer-Adjusting (1.925MM)
110	98-7882	3	Washer-Adjusting (1.950MM)
120	98-7676	3	Gasket
130	98-7677	3	Seal-Heat

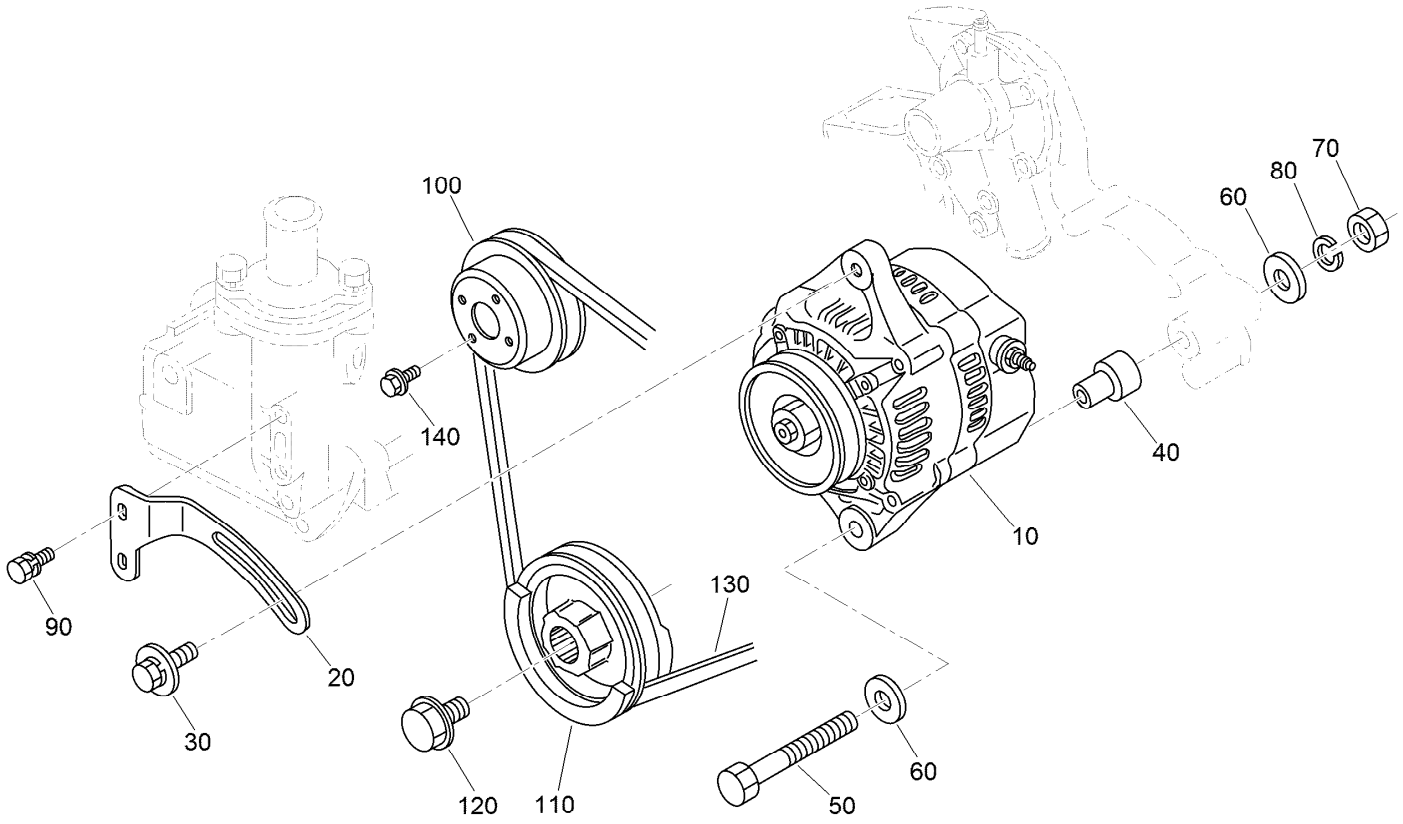

Alternator and Pulley Assembly

Ref.	Part Number	Qty.	Description
10	131-6557	1	Alternator ASM
20	121-2412	1	Stay-Alternator
30	121-2413	1	Bolt
40	110-3794	1	Collar
50	121-2418	1	Bolt-Hex
60	120-5832	2	Washer-Plain
70	98-7534	1	Nut
80	105-2893	1	Washer-Spring
90	98-7692	2	Bolt
100	100-1921	1	Pulley-Fan
110	112-2510	1	Pulley-Drive, Fan
120	100-1978	1	Bolt
130	119-4486	1	Belt-V, Fan
140	99-8363	4	Bolt-Flange

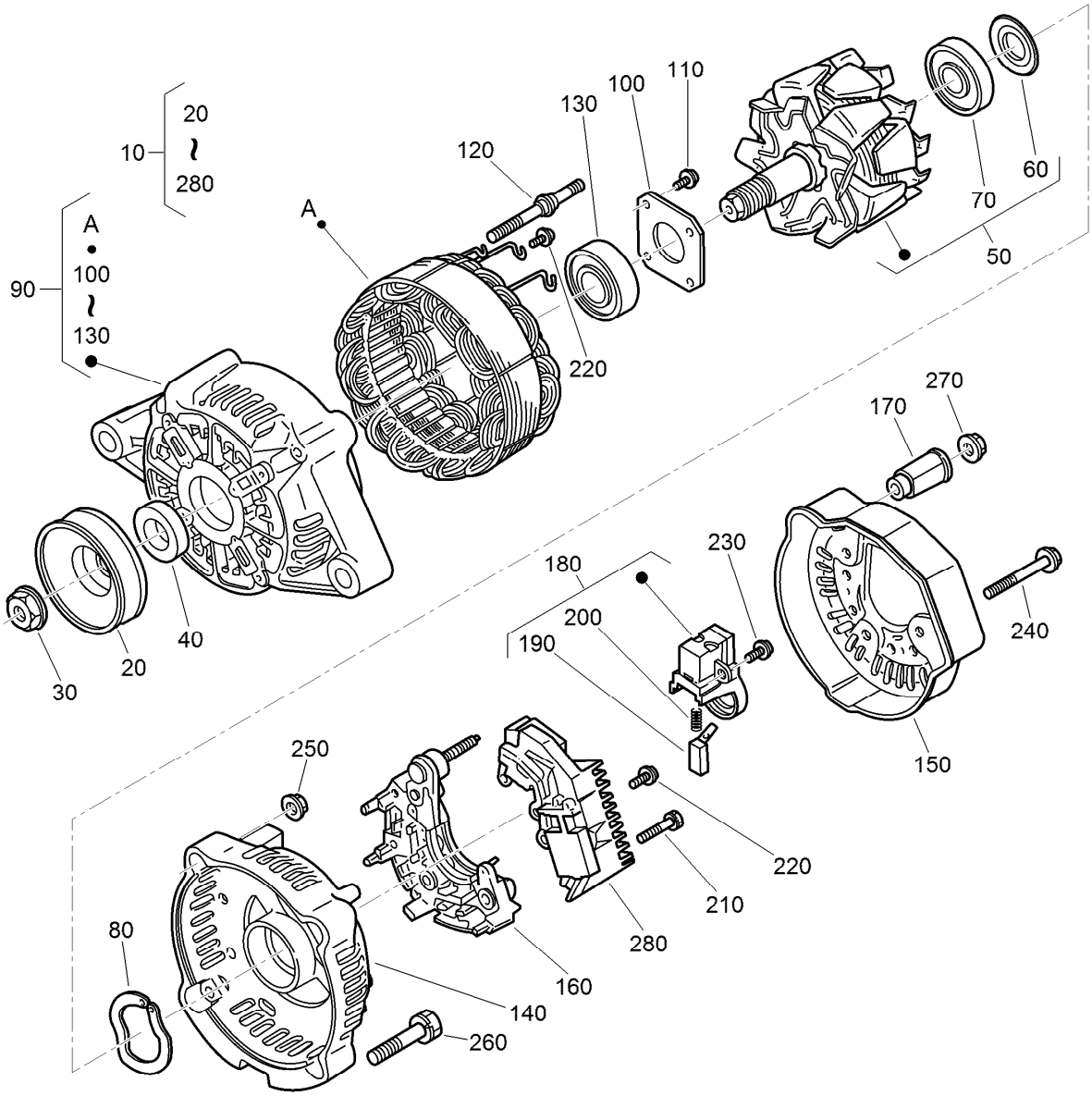

Alternator Assembly No. 131-6557

Ref.	Part Number	Qty.	Description
10	131-6557	1	Alternator ASM
20	98-9453	1	Pulley-Dynamo
30	98-7708	1	Nut
40	98-7709	1	Collar
50	107-0136	1	Rotor ASM
60	98-7711	1	Cover-Bearing
70	107-0138	1	Bearing-Ball
80	98-7713	1	Washer-Thrust
90	107-0139	1	Drive End Frame ASM
100	98-7715	1	Plate-Retainer
110	98-7716	4	Screw-Head, Round
120	98-7717	2	Bolt-Through
130	133-2811	1	Bearing
140	107-9087	1	Frame-End

Ref.	Part Number	Qty.	Description
150	107-0140	1	Cover-End
160	127-1612	1	Rectifier ASM
170	98-7722	1	Bushing-Insulation
180	107-0141	1	Brush Holder ASM
190	98-7724	2	Brush
200	98-7725	2	Spring-Brush
210	98-7726	2	Screw-Head, Round
220	98-7727	6	Screw-Head, Round
230	98-7728	1	Screw-Head, Round
240	98-7729	3	Bolt
250	98-7730	2	Nut
260	98-7731	2	Bolt
270	98-7732	1	Nut
280	110-3799	1	Regulator ASM

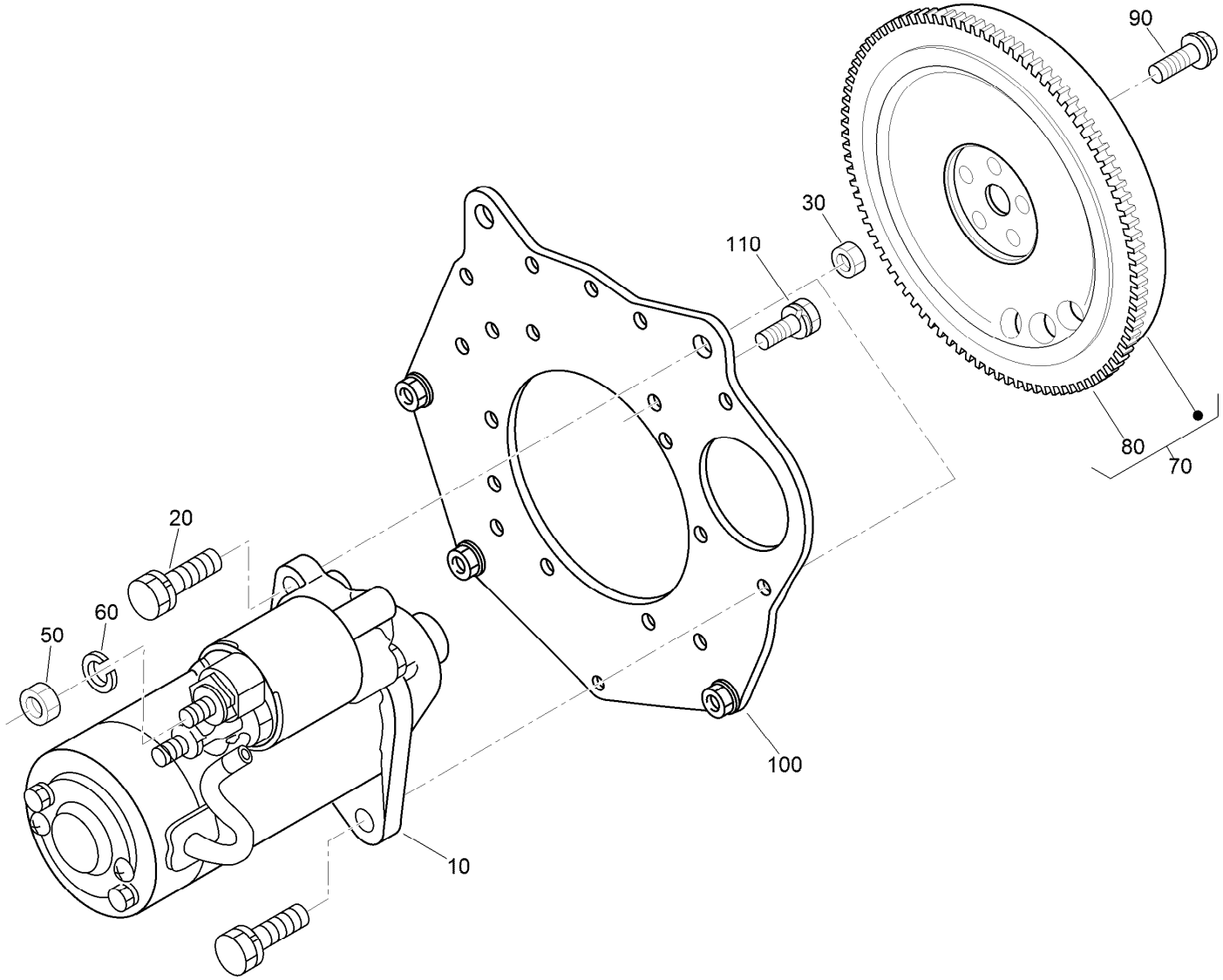

Starter and Flywheel Assembly

Ref.	Part Number	Qty.	Description
10	110-3800	1	Starter ASM
20	98-7697	2	Bolt
30	98-7534	2	Nut
50	98-7534	1	Nut
60	105-2893	1	Washer-Spring
70	130-1369	1	Flywheel ASM
80	127-1604	1	Gear-Ring
90	100-1930	5	Bolt-Flywheel
100	120-3130	1	Plate-End, Rear
110	110-3754	10	Bolt

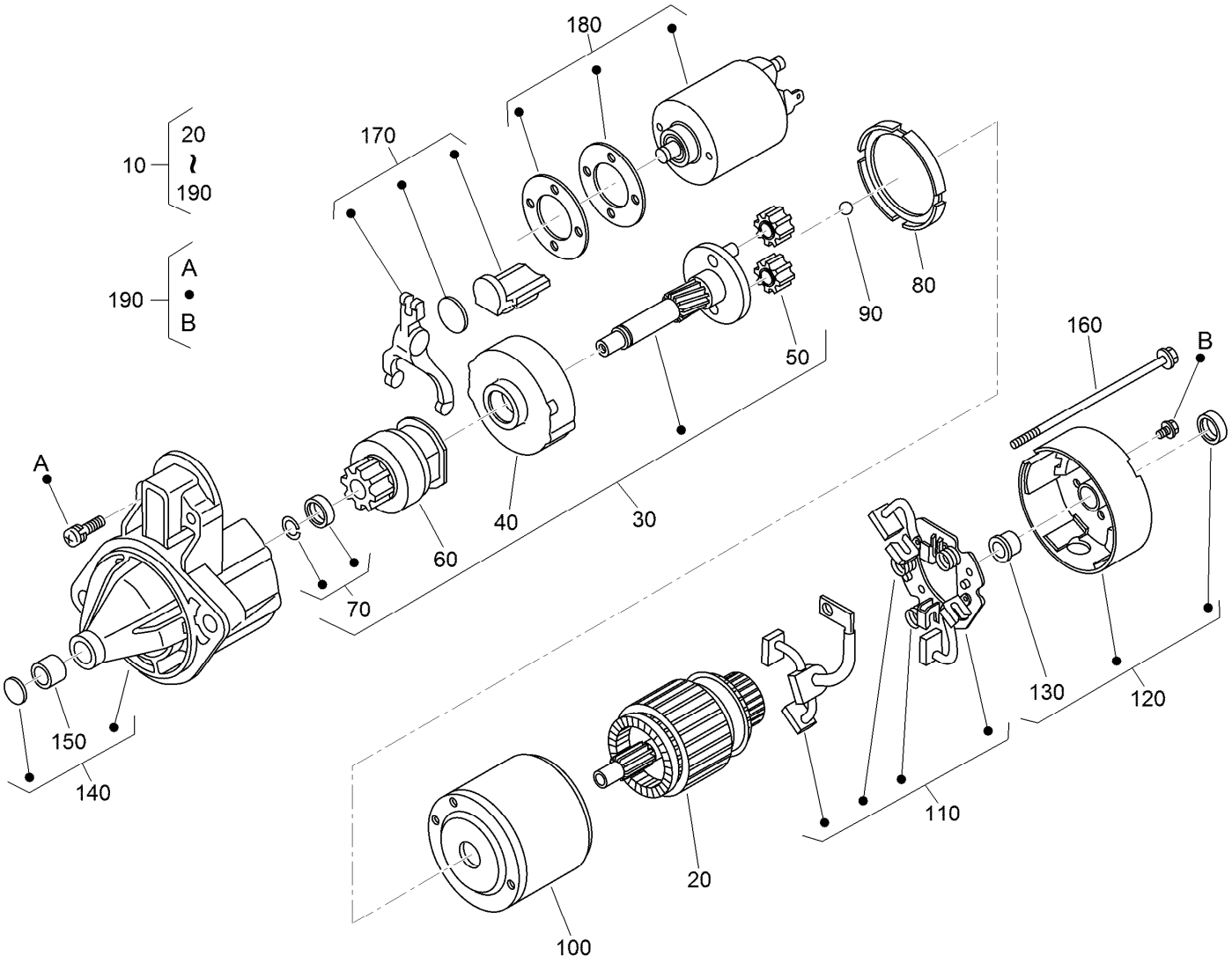

Starter Component Assembly

Ref.	Part Number	Qty.	Description
10	110-3800	1	Starter ASM
20	110-3801	1	Armature
30	110-3802	1	Shaft ASM
40	120-3142	1	Gear-Internal
50	110-3804	3	Gear-Planetary
60	110-3805	1	Clutch-Running, Over
70	110-3806	1	Stopper
80	120-3143	1	Gasket
90	110-3808	1	Ball
100	130-1295	1	Yoke

Ref.	Part Number	Qty.	Description
110	110-3810	1	Brush Holder ASM
120	110-3811	1	Rear Bracket ASM
130	110-3812	1	Bushing
140	110-3813	1	Front Bracket ASM
150	110-3814	1	Bushing
160	110-3815	2	Bolt
170	110-3816	1	Fork Lever ASM
180	110-3817	1	Magnetic Switch ASM
190	110-3818	2	Screws (Set Of 4)

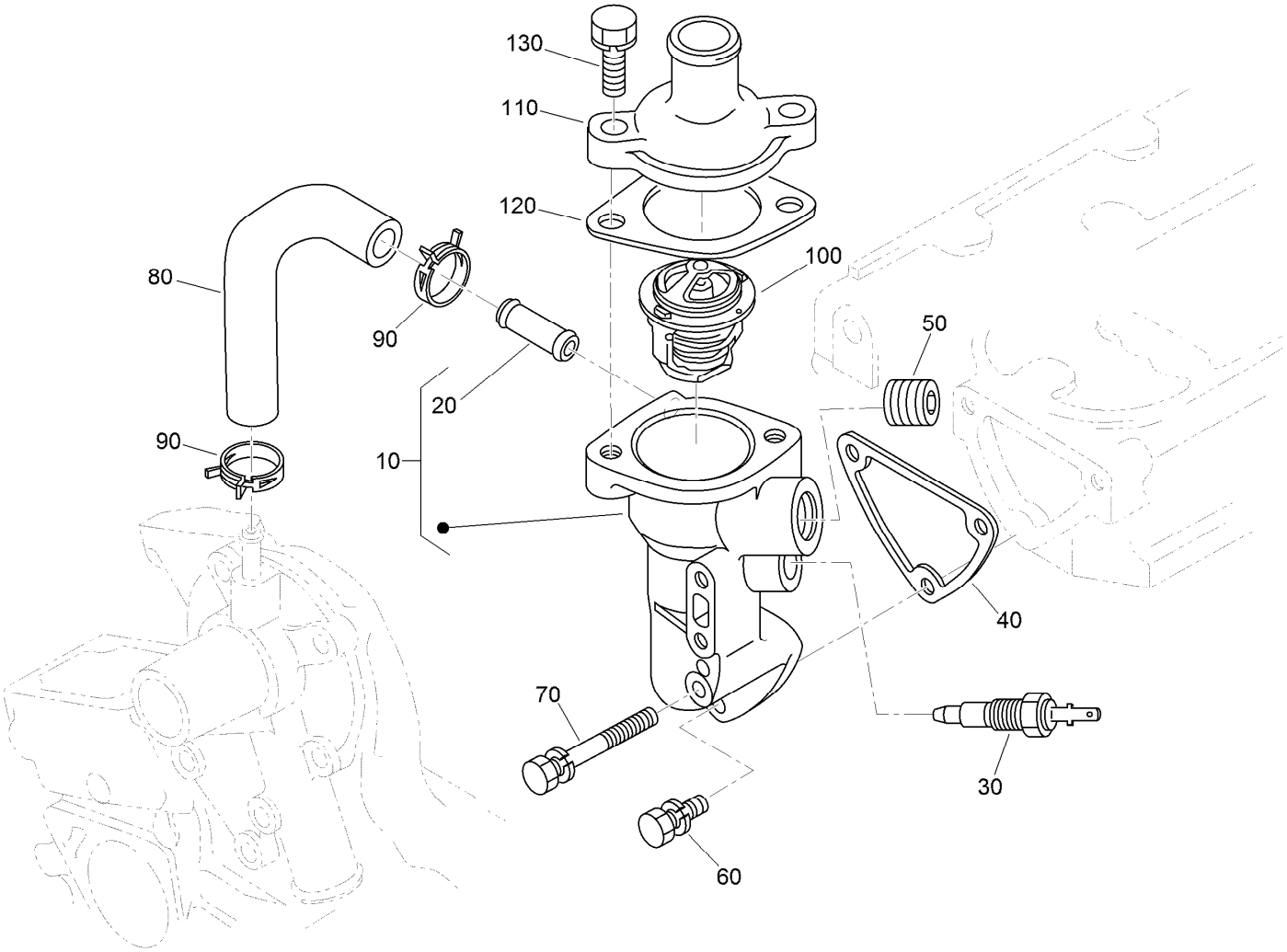

Water Flange and Thermostat Assembly

Ref.	Part Number	Qty.	Description
10	121-2414	1	Water Flange ASM
20	98-9580	1	Pipe-Return, Water
30	100-1983	1	Thermo-Switch
40	110-3820	1	Gasket-Flange, Water
50	105-2874	1	Plug
60	98-7692	2	Bolt
70	125-9063	1	Bolt-Sems
80	100-2017	1	Pipe-Return, Water
90	125-9078	2	Clamp-Hose
100	98-7778	1	Thermostat ASM
110	121-2415	1	Cover-Thermostat
120	105-3748	1	Gasket-Thermostat
130	98-7438	2	Bolt

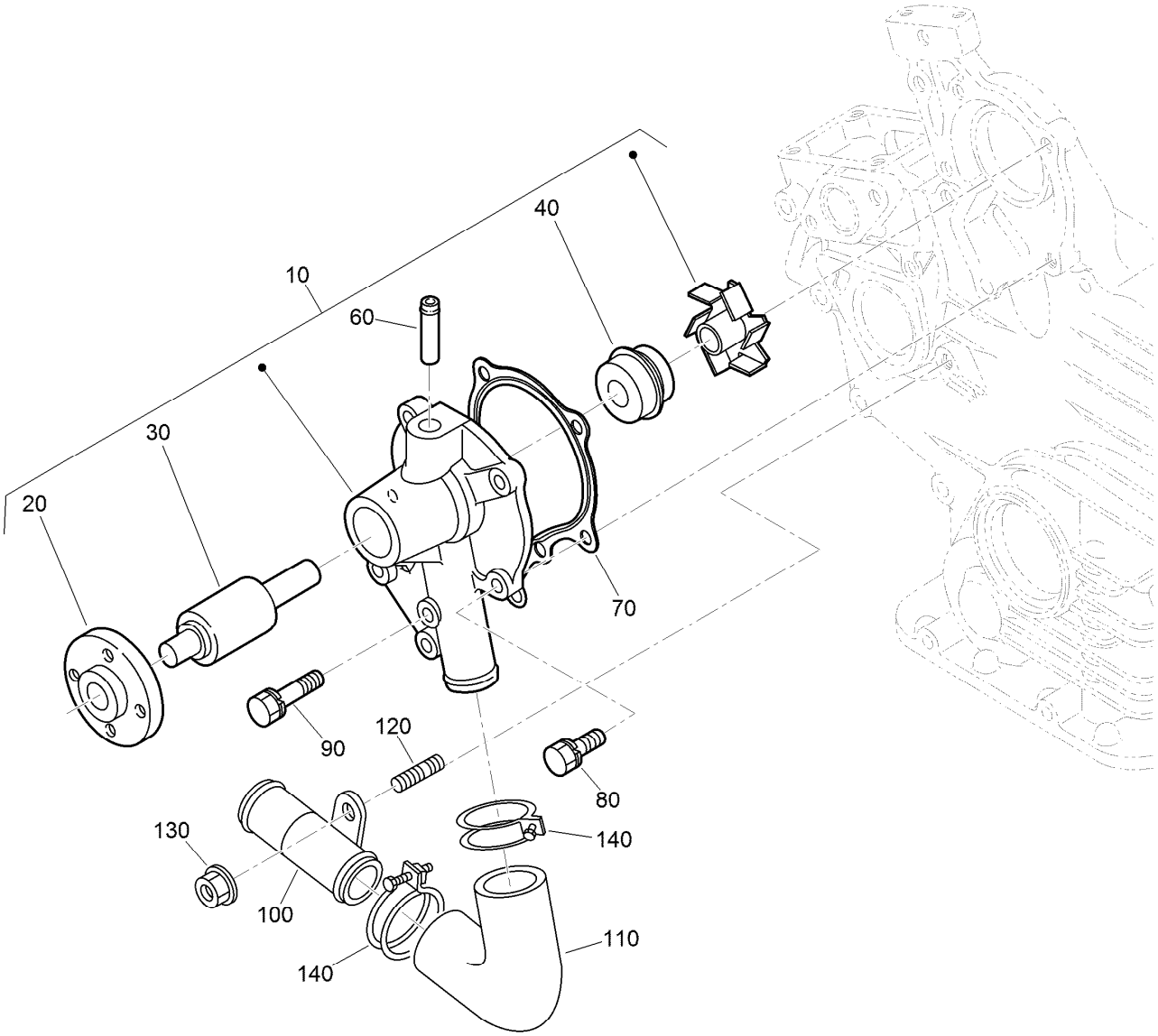

Water Pump and Water Pipe Assembly

Ref.	Part Number	Qty.	Description
10	127-1607	1	Water Pump ASM
20	125-9081	1	Flange-Pump, Water
30	100-1934	1	Bearing-Ball
40	99-3518	1	Water Pump Seal ASM
60	100-1932	1	Pipe-Return, Water
70	117-8846	1	Gasket-Pump, Water
80	100-1750	4	Bolt
90	100-1764	1	Bolt
100	112-2835	1	Pipe-Water
110	112-2836	1	Hose-Water
120	100-1924	1	Stud
130	100-2203	1	Nut-Flange
140	110-3828	2	Band-Pipe

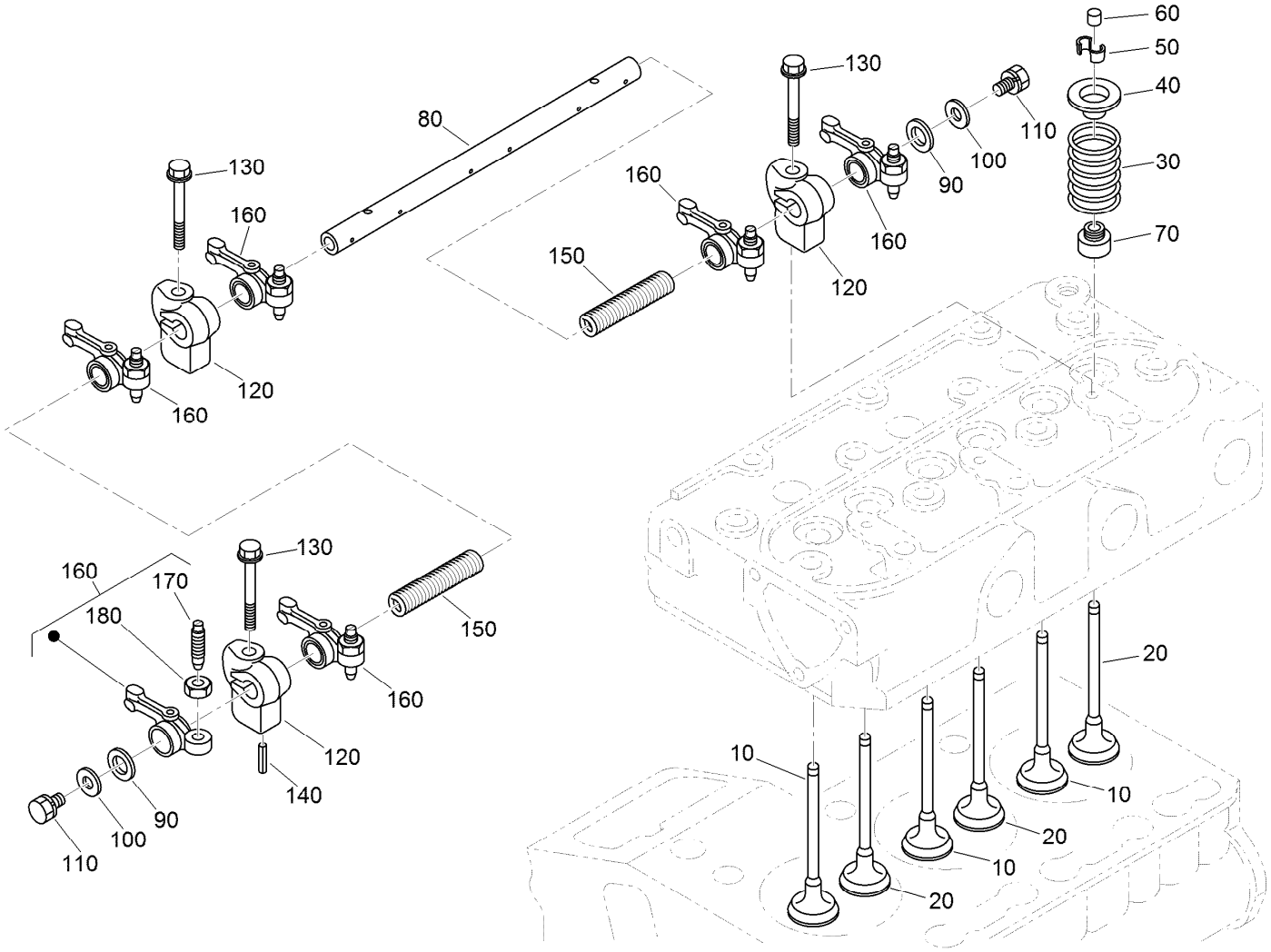

Valve and Rocker Arm Assembly

Ref.	Part Number	Qty.	Description
10	112-2514	3	Valve-Inlet
20	112-2515	3	Valve-Exhaust
30	100-1823	6	Spring-Valve
40	100-1825	6	Retainer-Spring, Valve
50	120-3136	6	Collet-Spring, Valve
60	100-2155	6	Cap-Valve
70	100-1797	6	Seal-Stem, Valve
80	112-8341	1	Shaft-Arm, Rocker
90	100-2044	2	Washer

Ref.	Part Number	Qty.	Description
100	110-3832	2	Washer-Plain
110	100-1762	2	Bolt
120	110-3833	3	Bracket-Arm, Rocker
130	110-3834	3	Bolt-Flange
140	98-7602	1	Pin-Spring
150	112-8342	2	Spring
160	100-1884	6	Rocker Arm ASM
170	100-1885	6	Screw-Adjusting
180	100-1827	6	Nut

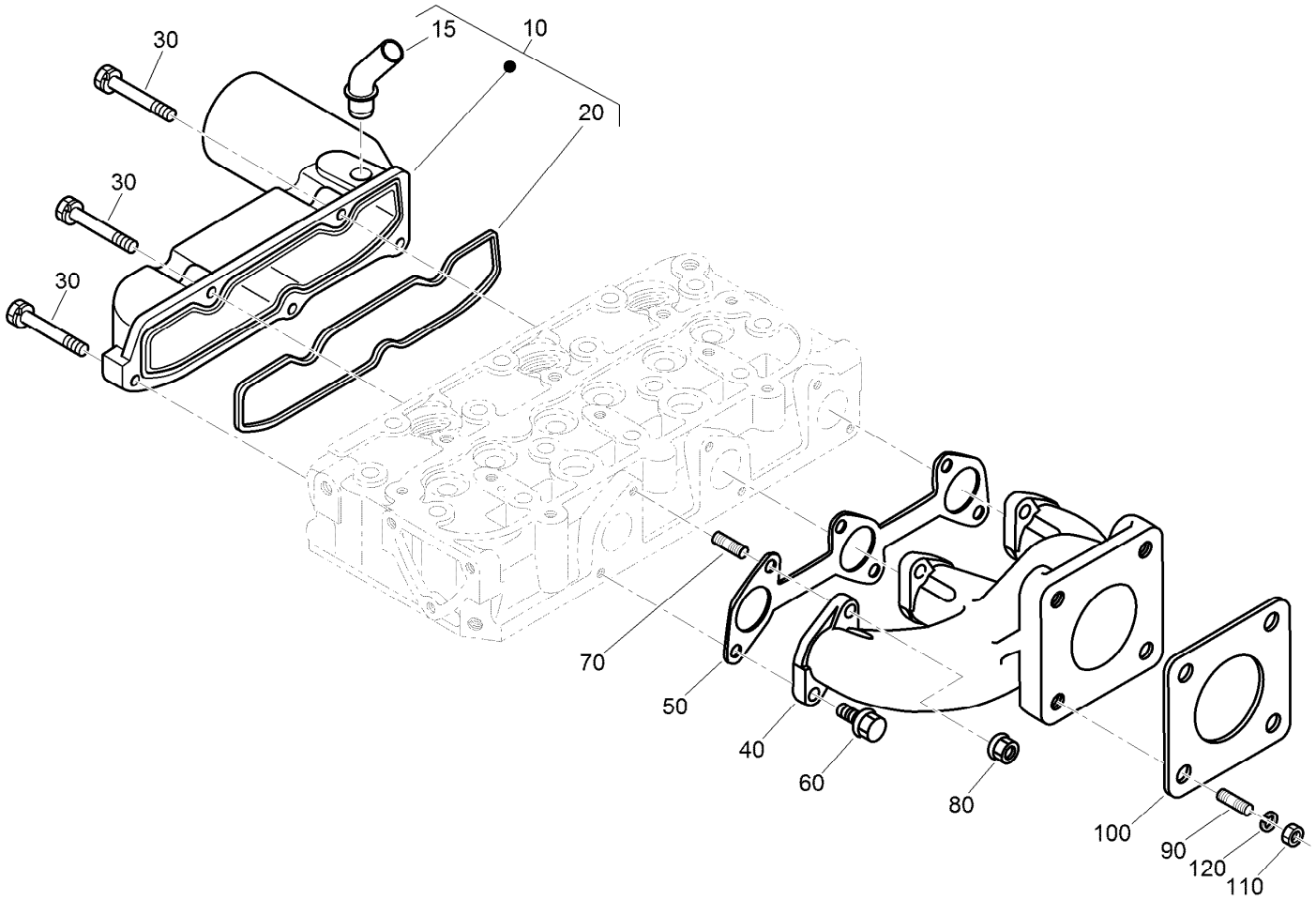

Inlet and Exhaust Manifold Assembly

Ref.	*Part Number*	*Qty.*	*Description*
10	120-3141	1	Intake Manifold ASM
15	121-2417	1	Pipe-Breather
20	110-3838	1	Gasket-Manifold, Intake
30	98-9352	5	Bolt
40	110-3839	1	Manifold-Exhaust
50	110-3840	1	Gasket-Manifold, Exhaust
60	130-1154	3	Screw-Hex HD
70	130-1156	3	Bolt-Stud
80	100-1778	3	Nut
90	98-7769	4	Stud
100	99-8343	1	Gasket-Muffler
110	98-7534	4	Nut
120	105-2893	4	Washer-Spring

Attachments and Accessories

For 04384 Greensmaster 3250-D 2-Wheel Drive Traction Unit

Product Name	Model/Part
Turf Evaluator	04399
CE Guard Kit	04441
Three-Wheel Drive Kit without ROPS	04477
Dethatching Unit	04479
Leak Detector Kit	04497
Light Kit	04554
8-Blade DPA Reel Mower	04652
11-Blade DPA Reel Mower	04654
14-Blade DPA Reel Mower	04656
Hose Adapter Kit	100-6430
Weight Kit, Greensmaster and Sand Pro/Infield Pro Traction Unit	100-6442
Oil Cooler Kit	104-7701
Ground-Following Suspension Kit	104-9400
Radiator Screen Kit	105-9766
Filter-Air	108-3811
Seperator Filter ASM	110-9044
Pull Link Kit for DPA Reel Mower Groomer	112-9248
Wireless Hourmeter	115-4754
Filter-Oil, Engine	115-8189
Premium Synthetic Bio-Degradable Hydraulic Fluid (5 Gallon Pail)	119-2157
Premium Synthetic Bio-Degradable Hydraulic Fluid (55 Gallon Drum)	119-2158
Spark Arrester Kit	120-1951
RH Arm Rest Kit	121-3658
Premium Engine Oil 10w30 (55 Gallon Drum)	121-6392
Premium Engine Oil 10w30 (5 Gallon Pail)	121-6393
Toro Reel Paper (10 Pack)	125-5610
Hi-Back Seat Cover	133-1308
PX Hydraulic Fluid (5 Gal)	133-8086
PX Hydraulic Fluid (55 Gal)	133-8087
Bag Kit	137-8130
Bimini Shade Kit	138-8579
MVP Kit-HYD Hose	140-5235
Shim-TORO Reel (.002in)	140-5531
Tire - 20 X 10.00-8, 4ply	144-3665
MVP Kit 1000 Hour	44968
Height-of-Cut Bar	94-9010
Weight Kit, Greensmaster 3100, 3150 or 3250-D Traction Unit with Three-Wheel Drive	99-1645

Notes:

TORO®

Count on it.