Form No. 3443-289 Rev C

TORO®

Count on it.

Parts Catalog

72in Rear Discharge Rotary Mower

Groundsmaster® 3200 or 3300 Series Traction Unit

Model No. 31973—Serial No. 407850000 and Up

Register at www.Toro.com.
Original Instructions (EN)

CE

3443-289 C

Ordering Replacement Parts

To order replacement parts, please supply the part number, the quantity, and the description of each part desired.

Understanding Reference Numbers

Each identified part in an illustration has a reference number. The reference number for a part also appears in the parts list, along with other information about the part.

This catalog uses two special reference number formats, one to indicate parts in a service assembly and another to indicate the quantity of a given part in an illustration.

Service Assembly Reference Numbers

Parts in service assemblies have reference numbers in the form a:b. The a represents the reference number of the entire service assembly and the b represents a sequential number unique to each part within the service assembly.

For example, a wheel assembly might be identified by reference number 6, the tire by 6:1, the valve by 6:2, and the wheel by 6:3. When you order the assembly identified by reference number 6, you receive all parts identified by reference numbers 6:1,6:2, and 6:3. However, you may also order any part individually. Reference numbers of this type appear in illustration and in parts lists.

Reference Numbers Indicating Quantity

In an illustration, if a reference number indicates more than one part, the reference number has the form nX y. The n represents the quantity of the part, the X is the multiplication symbol, and the y represents the reference number.

For example, in an illustration, the reference number 2X 37 means that two of the parts identified by reference number 37 are indicated.

Contents

Deck Assembly 4
Deck Decal Assembly No. 138-4516SP 6
Spindle Assembly No. 138-4519 8
Gearbox Assembly 10
Gearbox Assembly No. 145-5990 12
Tensioner Assembly No. 140-9027 14
Belt Cover, Caster Arm and Wheel Assembly 16
Wheel Assembly No. 137-5529 18
Latch Assembly No. 139-0888 20

© 2023—The Toro® Company
8111 Lyndale Avenue South
Bloomington, MN 55420

Contact us at www.Toro.com.
Printed in the USA.
All Rights Reserved

Deck Assembly

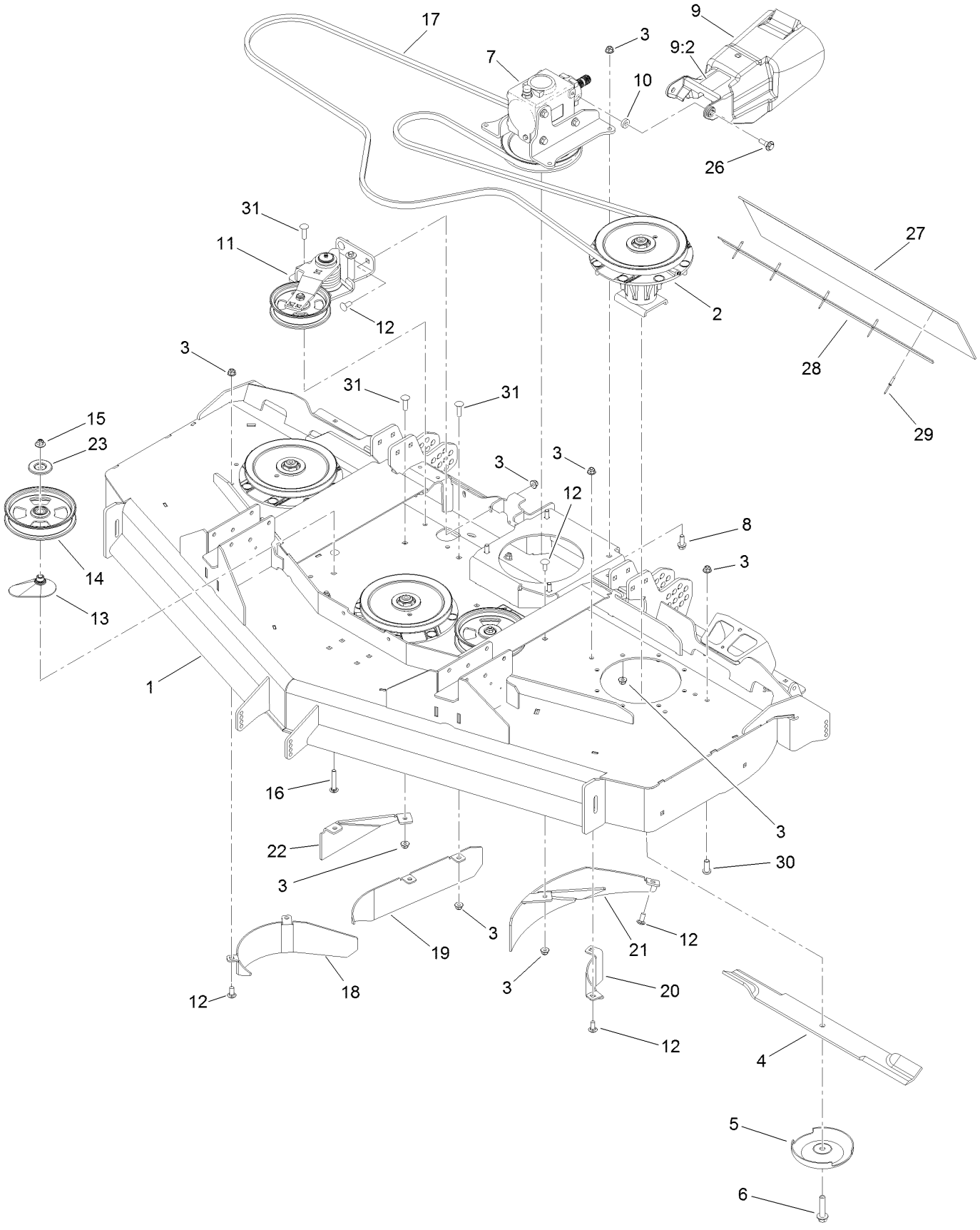

Deck Assembly (continued)

Ref.	Part Number	Qty.	Description
1	138-4516SP	1	Deck W/Decals
2	138-4519	3	Spindle ASM
3	104-8301	49	Nut-HF, NI
4	110-0621-03	3	Blade-Medium Flow
5	72-9361	3	Cup-Scalp, Anti
6	92-5816	3	Bolt-Blade
7		1	Gearbox ASM ●
8	3231-22	4	Screw-CARR
9	139-6301	1	PTO Guard W/Decals
9:2	139-6303	1	Decal-Danger, Entanglement
10	5-0652	2	Spacer
11	140-9027	1	Tensioner ASM
12	3231-27	9	Screw-CARR
13	109-2872	2	Spacer-Pulley
14	136-5404	2	Pulley-Idler, Flat
15	109-6658	2	Nut-Flange, NI
16	3231-40	2	Bolt-CARR
17	135-3215	1	Belt-V
18	137-2541-0P	1	Baffle-Inner, LH
19	140-9043-0P	1	Baffle-Inner, Center
20	137-2543-0P	1	Baffle-Inner, RH
21	139-6312-0P	1	Baffle
22	140-9045-0P	1	Baffle-Kicker, Center
23	126-8043	2	Shield-Dust
26	109-9840	2	Screw-Shoulder, HHF
27	140-3054	1	Flap-Rubber, Middle
28	140-3053-0P	1	Bracket-Flap, Middle
29	103-0138	5	Rivet-Pop
30	3274-80	7	Screw-HH
31	3231-28	5	Screw-CARR

● Not serviced separately

Deck Decal Assembly No. 138-4516SP

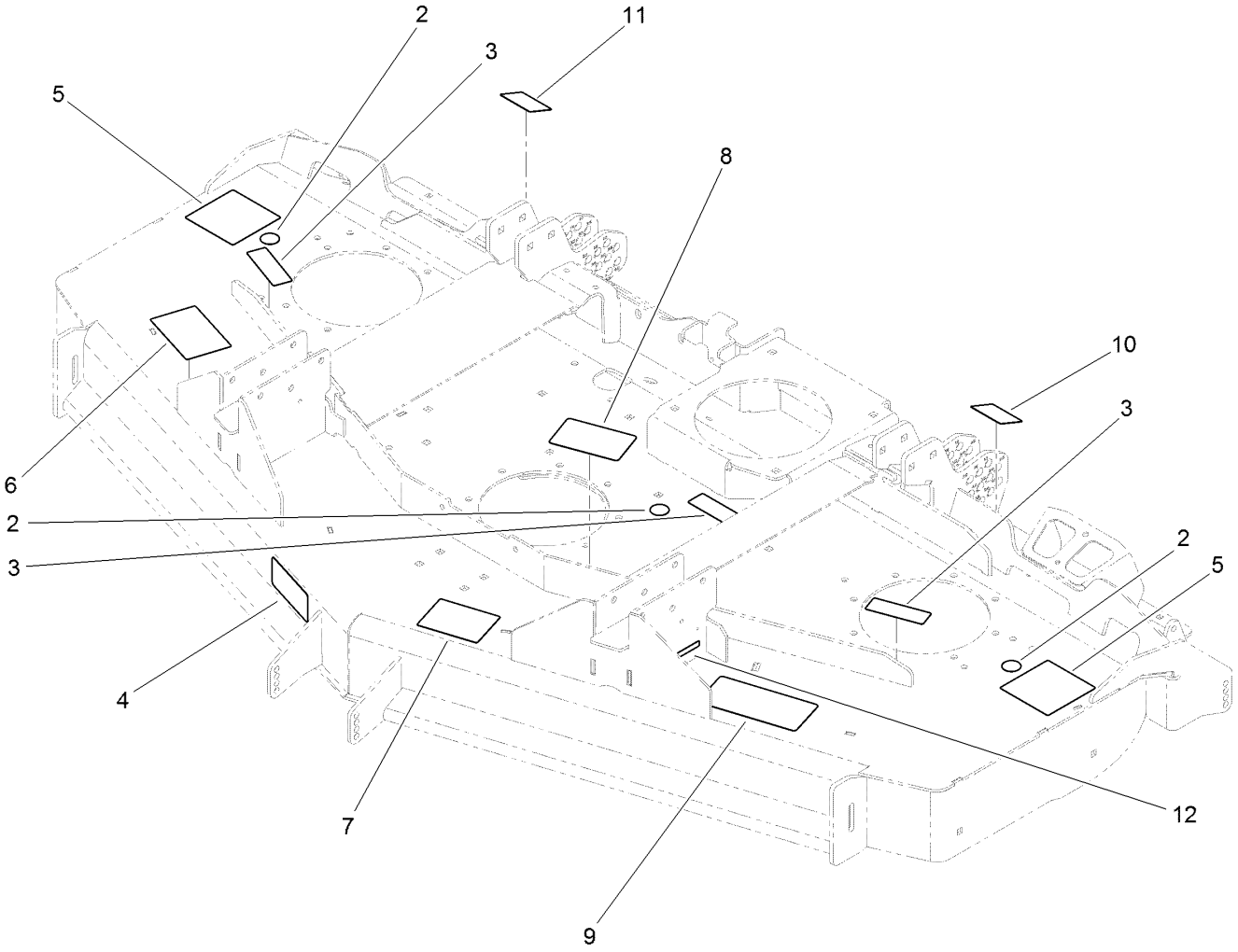

Deck Decal Assembly No. 138-4516SP (continued)

Ref.	Part Number	Qty.	Description
2	58-6520	3	Decal-Grease
3	117-4979	3	Decal-Warning
4	93-7818	1	Decal-Torque, Blade Bolt
5	120-6604	2	Decal-Danger
6	57-0280	1	Decal
7	127-0326	1	Decal-Scalp, Anti
8	138-7359	1	Decal-Routing, Belt
9	137-5949	1	Decal-HOC
10	144-0540	1	Decal-H0C, LH
11	144-0541	1	Decal-HOC, RH
12	133-8061	1	Decal-Warning

Spindle Assembly No. 138-4519

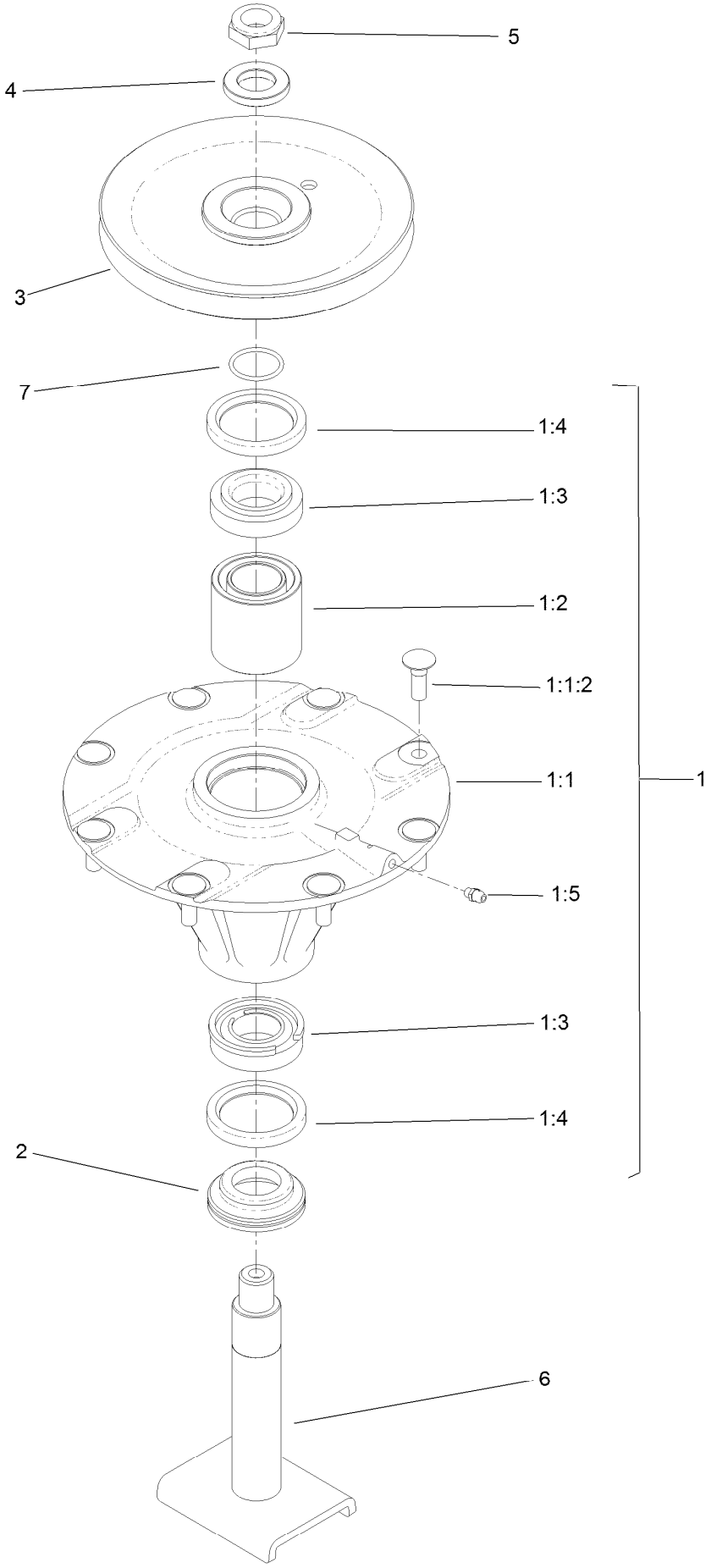

Spindle Assembly No. 138-4519 (continued)

Ref.	Part Number	Qty.	Description
1	139-6338	1	Spindle Housing ASM
1:1		1	Spindle ASM ●
1:1:2	114-8195	8	Bolt-Neck, Ribbed
1:2	108-1954	1	Bearing Spacer Set
1:3	110-8297	1	Bearing ASM
1:4	253-154	2	Seal-Oil
1:5	302-5	1	Fitting-Grease
2	138-6416	1	Spacer-Spindle, Shaft
3	138-4525	1	Pulley
4	120-5576	1	Washer-Hardened
5	3296-60	1	Nut-Lock, NI
6	139-1042	1	Spindle-Shaft
7	106-7159	1	O-Ring

● Not serviced separately

Gearbox Assembly

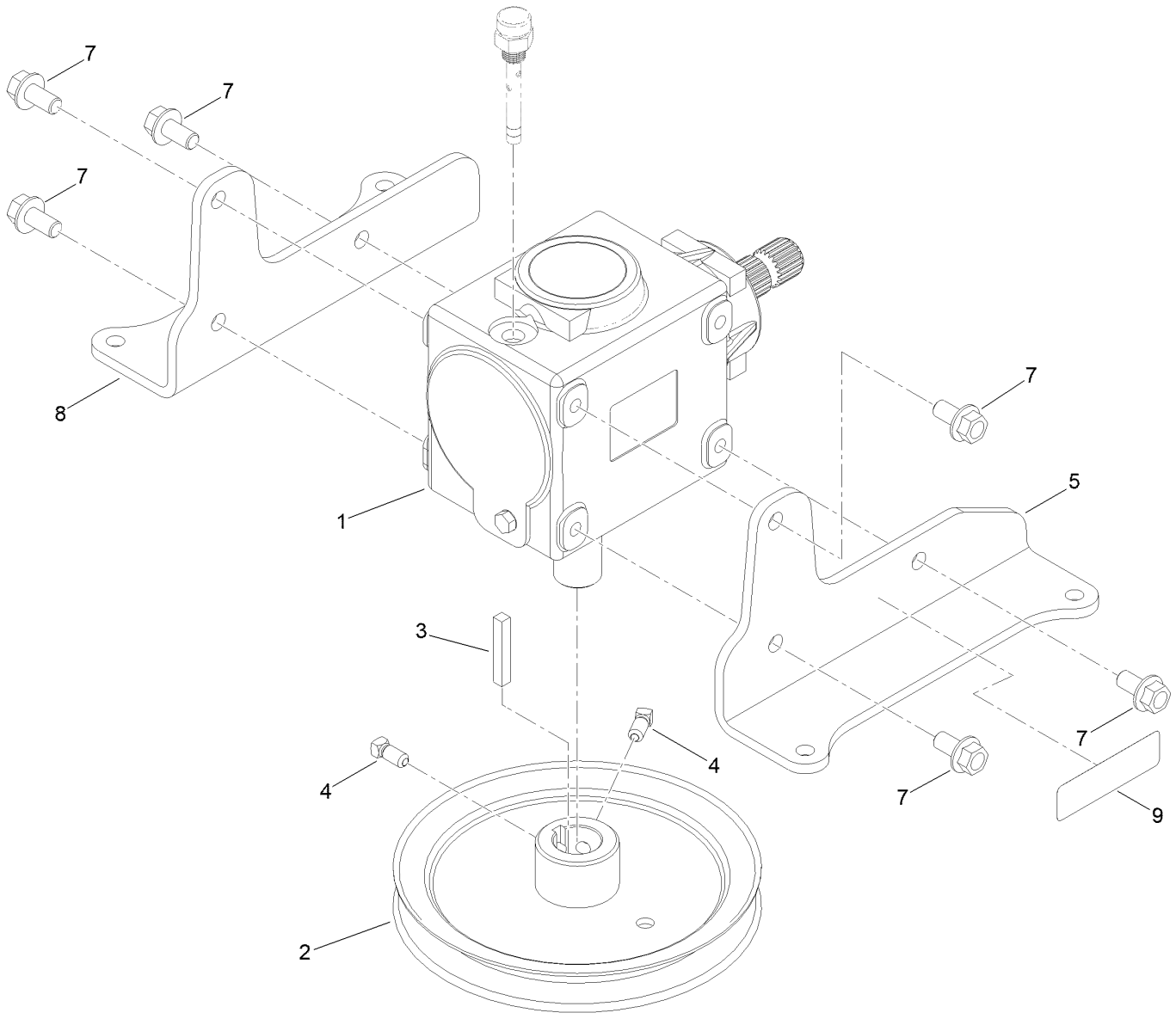

Gearbox Assembly (continued)

Ref.	Part Number	Qty.	Description
1	145-5990	1	Gearbox
2	138-0263	1	Pulley
3	94-2425	1	Key-Square
4	1-803022	2	Screw-Set
5	144-0494-03	1	Bracket-Gearbox, LH
7	139-6300	6	Screw-Hfl
8	144-0495-03	1	Bracket-Gearbox, RH
9	93-6697	1	Decal-Lube

Gearbox Assembly No. 145-5990

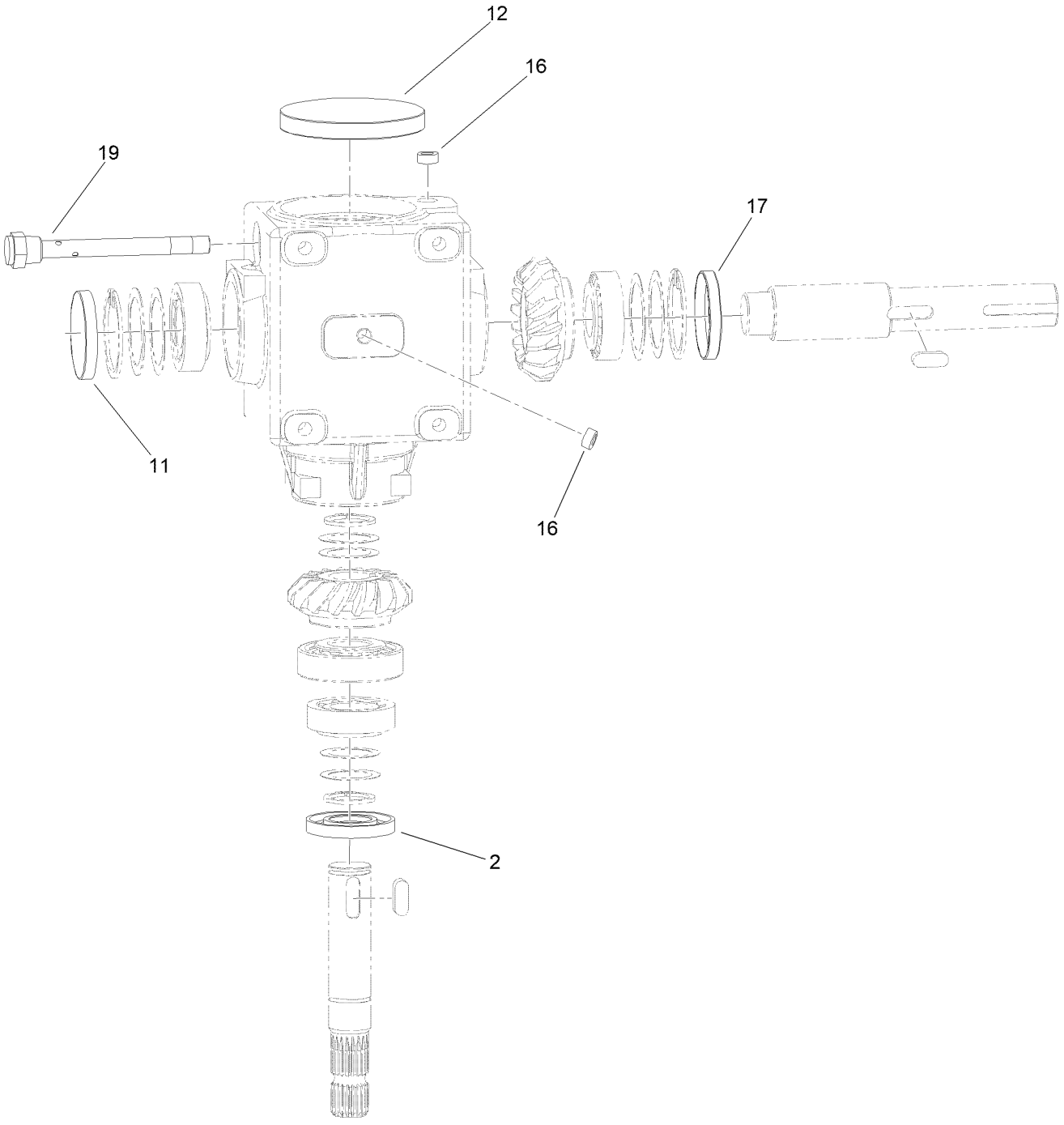

Gearbox Assembly No. 145-5990 (continued)

Ref.	Part Number	Qty.	Description
2	140-7133	1	Seal-Oil
11	140-7129	1	Plug-Cap
12	140-7131	1	Plug-Cap
16	140-7132	3	Plug
17	145-5989	1	Seal-Oil
19	140-7130	1	Dipstick

Tensioner Assembly No. 140-9027

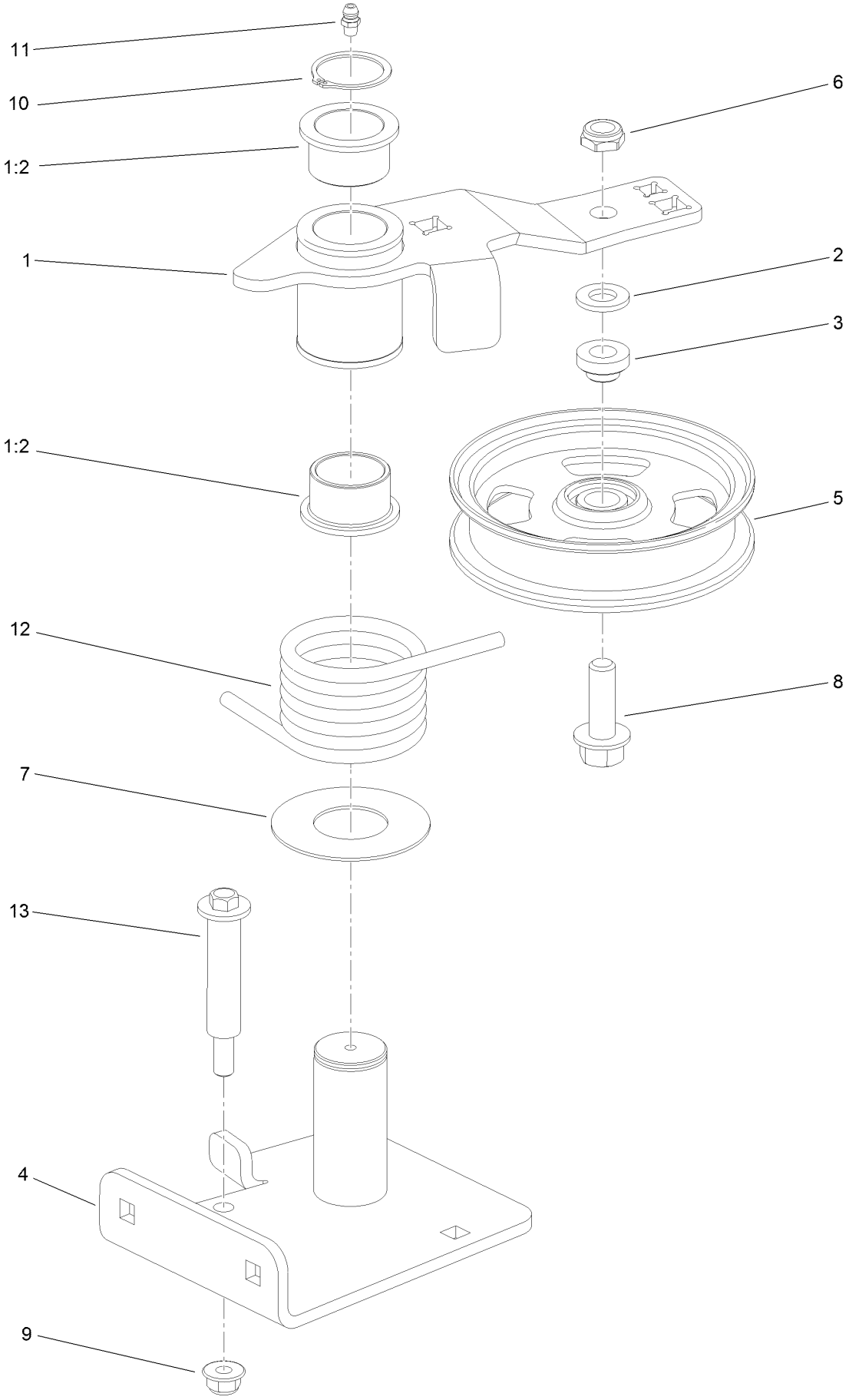

Tensioner Assembly No. 140-9027 (continued)

Ref.	Part Number	Qty.	Description
1	144-0503	1	High Idler Arm ASM
1:2	93-4510	2	Bushing-Caster
2	106-9888	1	Washer-Flat
3	108-1924	1	Spacer-Idler
4	140-9023	1	Pivot-Idler
5	136-5405	1	Pulley-Idler, Flat
6	3296-45	1	Nut-Hex
7	108-1926	1	Washer
8	100-6116	1	Screw-HHF
9	104-8301	1	Nut-HF, NI
10	32120-84	1	Ring-Snap, External
11	302-5	1	Fitting-Grease
12	112-7395	1	Spring-Torsion
13	112-3977	1	Bolt-Shoulder

Belt Cover, Caster Arm and Wheel Assembly

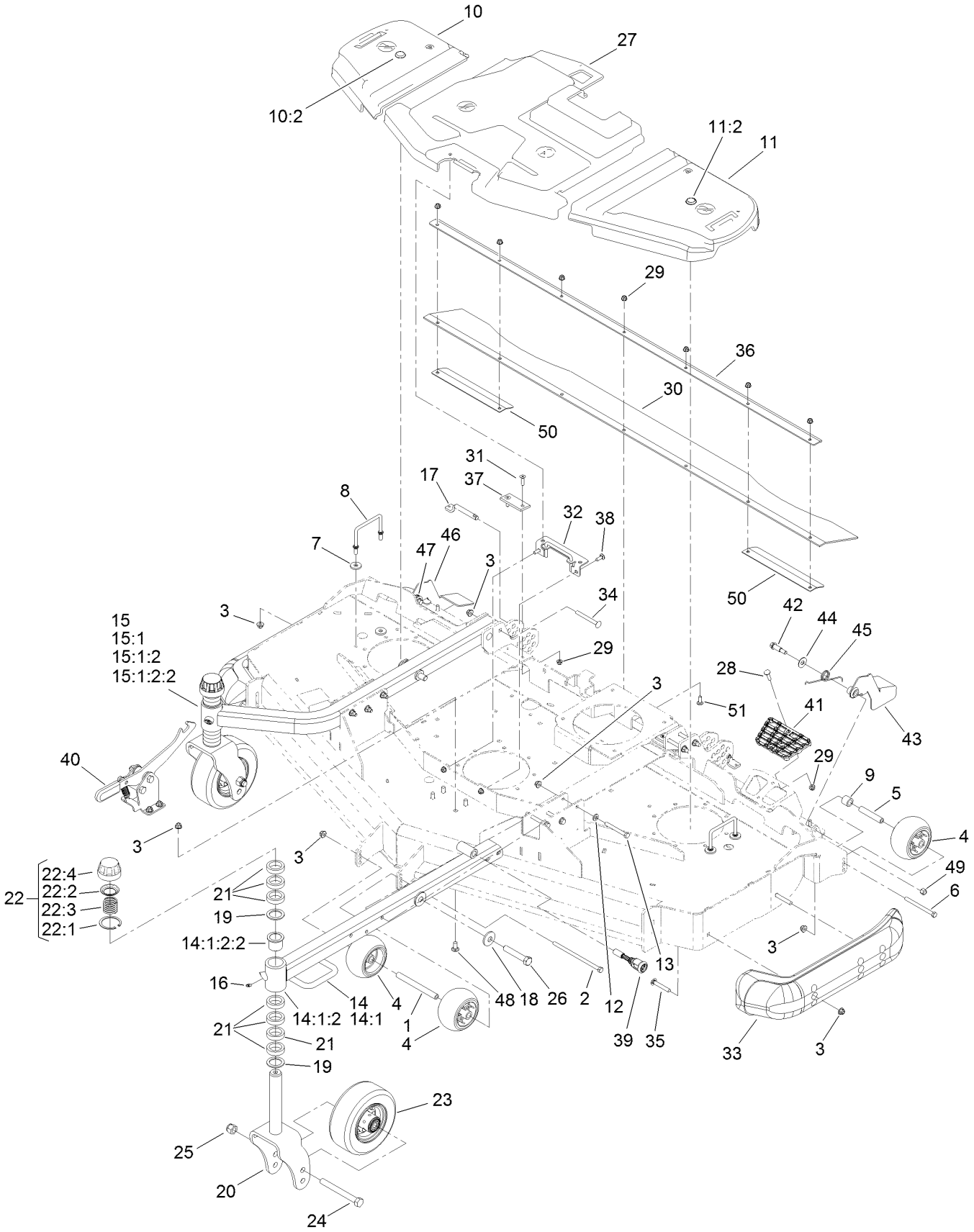

Belt Cover, Caster Arm and Wheel Assembly (continued)

Ref.	Part Number	Qty.	Description
1	98-5967	1	Spacer-Wheel
2	108-5388	1	Screw-HH
3	104-8301	25	Nut-HF, NI
4	1-603299	4	Roller-Scalp, Anti
5	98-7912	2	Tube-Spanner
6	323-23	2	Screw-HH
7	1-373034	4	Washer
8	109-6982	2	Wireform-Cover
9	98-7913	2	Tube-Spacer
10	117-7815	1	RH Belt Cover ASM
10:2	117-3824	1	Plug-Plastic
11	117-7816	1	LH Belt Cover ASM
11:2	117-3824	1	Plug-Plastic
12	3256-24	6	Washer-Plain
13	323-20	6	Screw-HH
14	137-2481-01	1	Arm-Caster, LH
14:1		1	Arm-Caster, LH ●
14:1:2		1	Hub ASM ●
14:1:2:2	69-6470	2	Bushing-Caster
15	137-2485-01	1	Arm-Caster, RH
15:1		1	Arm-Castor, RH ●
15:1:2		1	Hub ASM ●
15:1:2:2	69-6470	2	Bushing-Caster
16	302-5	2	Fitting-Grease
17	140-3064	2	Pin-HOC ASM
18	103-0865	2	Washer-Blade Bolt, Heavy
19	69-6860	4	Washer-Thrust
20	137-2546-01	2	Fork-Caster
21	69-1510	14	Spacer
22	92-9727	2	HOC Cap ASM
22:1	92-5581	1	Ring-Rtng,Snap,Int,Flat
22:2	92-5583	1	Washer-Cap
22:3	92-9726	1	Spring-Compression
22:4	92-8861	1	Cap-HOC
23	137-5529	2	Wheel ASM
24	327-24	2	Screw-HH
25	3296-53	2	Nut-Lock, NI
26	139-6203	2	Screw-HH
27	138-7373	1	Cover-Belt, Center
28	3230-3	1	Screw-CARR
29	104-8300	14	Nut-HF, NI
30	139-0908	1	Flap Rubber
31	133-4543	4	Screw
32	139-0932	1	Bracket-Cover, Belt
33	112-1479	2	Skid-Bumper, Deck
34	3231-11	4	Screw-CARR
35	3231-44	4	Screw-CARR
36	139-0909-01	1	Bracket-Flap
37	138-4452	2	Pad-Stop, Deck
38	3230-10	2	Bolt-CARR
39	139-6345	1	Spring-Pin
40	139-0888	1	Latch ASM
41	126-4781	1	Step-Deck
42	66-0561	2	Screw-Shoulder
43	139-6324-03	1	Guard LH ASM
44	3-6803	2	Washer-Adjusting
45	51-4380	1	Spring-Torsion, LH
46	139-6321-03	1	Guard RH ASM
47	51-4370	1	Spring-Torsion, RH
48	3231-27	4	Screw-CARR
49	3296-6	2	Nut-Lock
50	144-0529-0P	2	Plate-Support, Flap
51	3230-22	7	Screw-CARR

● Not serviced separately

Wheel Assembly No. 137-5529

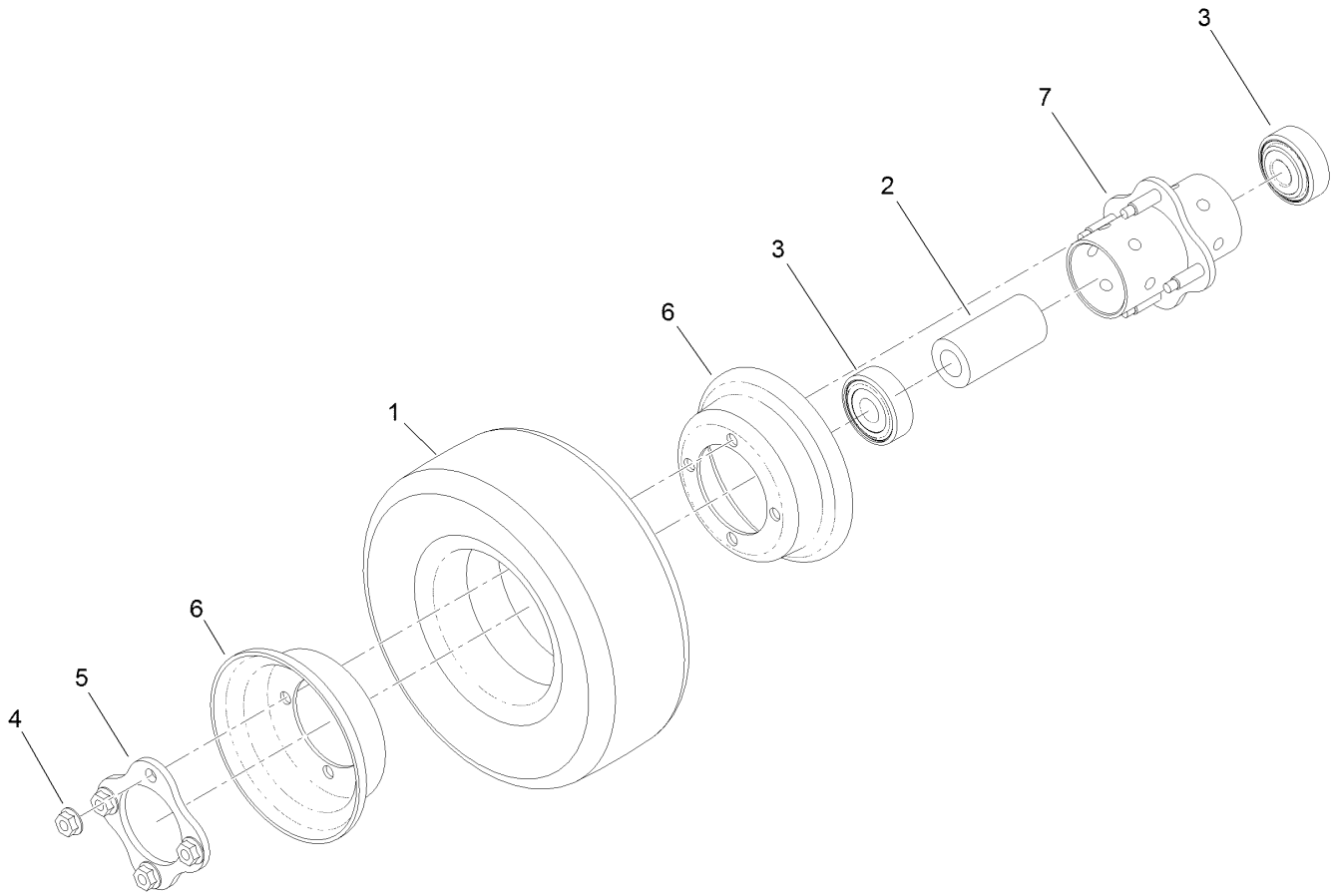

Wheel Assembly No. 137-5529 (continued)

Ref.	Part Number	Qty.	Description
1	136-4424	1	Tire-Pneumatic, Semi
2	93-4241	1	Spacer-Bearing, Inner
3	120-3366	2	Bearing
4	32128-16	4	Nut-HHF
5	93-4242	1	Plate
6	137-5552	2	Rim-Wheel, Half
7	93-5980	1	Hub

Latch Assembly No. 139-0888

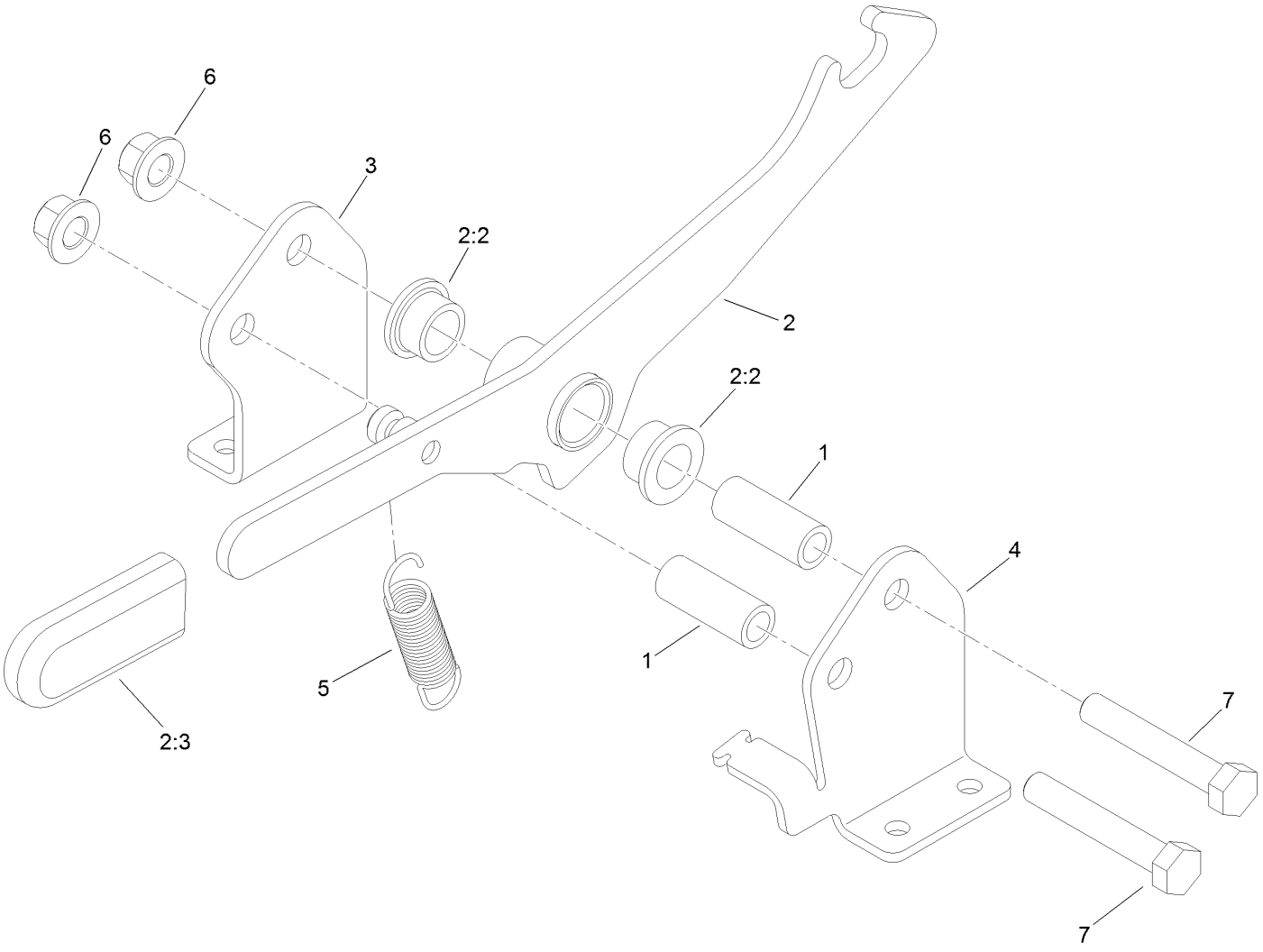

Latch Assembly No. 139-0888 (continued)

Ref.	Part Number	Qty.	Description
1	117-0380	2	Spacer
2	138-0283	1	Latch Arm ASM
2:2	93-2877	2	Bushing
2:3	119-1846	1	Grip
3	139-0889	1	Bracket-Latch, Mount (RH)
4	139-0887	1	Bracket-Latch, Mount (LH)
5	130-9645	1	Spring-Extension
6	99-5107	2	Nut-Lock
7	325-12	2	Screw-HH

Notes:

Notes:



Count on it.