FORM NO. 3311-665

TORO®

MODEL NO. 38120 – 1000001
THRU 1000350
MODEL NO. 38130 – 1000001
THRU 1000350

PARTS CATALOG

TORO S-200

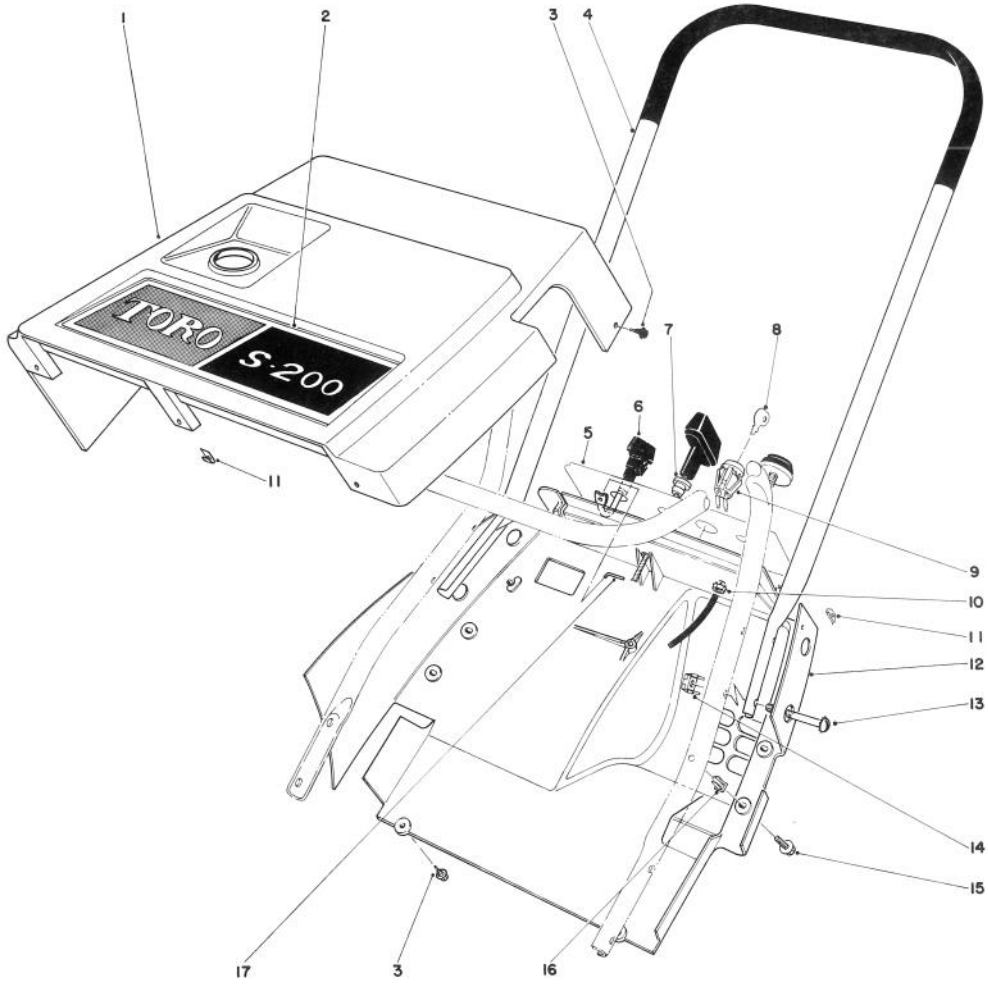

SHROUD & HANDLE ASSEMBLY (MODEL 38120)

Ref. No.	Part No.	Description	No. Used
1	39-0890	Upper Shroud	1
2	39-3290	Decal – Toro	1
3	32104-76	Self Tapping Screw	4
4	23-4260	Upper Handle	1
5	42-2180	Decal – Control Panel	1
6	39-0560	Control Assembly Choke	1
7	23-7470	Guide – Starter Rope	1
8	33-2010	Key	2
9	40-5940	Switch	1

Ref. No.	Part No.	Description	No. Used
10	32142-2	Locknut	1
11	3290-171	Nut Tinnerman	5
12	40-6630	Lower Shroud	1
13	32140-100	Round Head Machine Screw	4
14	3290-225	Nut – Retained	4
15	32144-34	Self Tapping Screw	3
16	3290-428	Push Nut	3
17	39-8180	Control Wire	1

COPYRIGHT © ALL RIGHTS RESERVED
The Toro Company – 1980
MINNEAPOLIS, MN 55420 – U.S.A.

PRICE $1.00

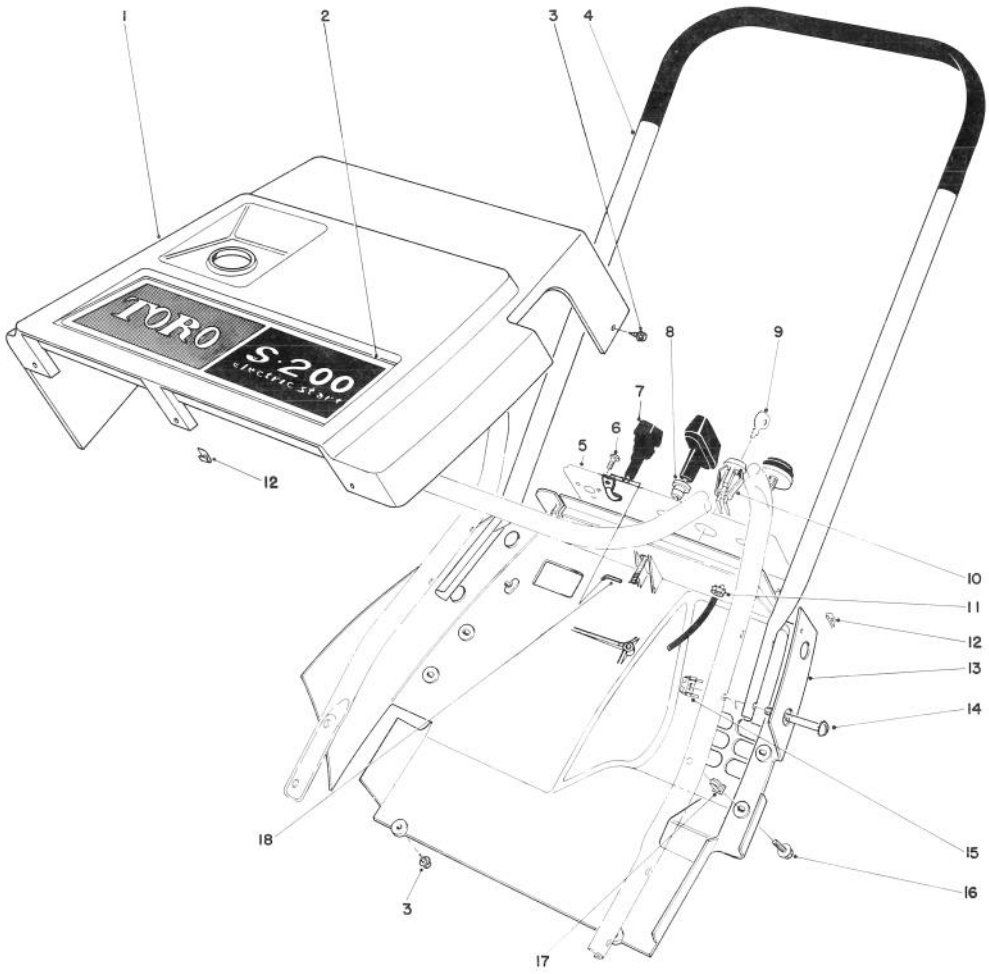

SHROUD & HANDLE ASSEMBLY (MODEL 38130)

Ref. No.	Part No.	Description	No. Used
1	39-0890	Upper Shroud	1
2	39-1890	Decal – Toro	1
3	32104-76	Self Tapping Screw	4
4	23-4260	Upper Handle	1
5	42-2170	Decal – Control Panel	1
6	32144-27	Plastic Screw	3
7	39-0560	Control Assembly Choke	1
8	23-7470	Guide – Starter Rope	1
9	33-2010	Key	2

Ref. No.	Part No.	Description	No. Used
10	40-5940	Switch	1
11	32142-2	Locknut	1
12	3290-171	Nut Tinnerman	5
13	40-6630	Lower Shroud	1
14	32140-100	Round Head Machine Screw	4
15	3290-225	Nut – Retained	4
16	32144-34	Self Tapping Screw	3
17	3290-428	Push Nut	3
18	39-8180	Control Wire	1

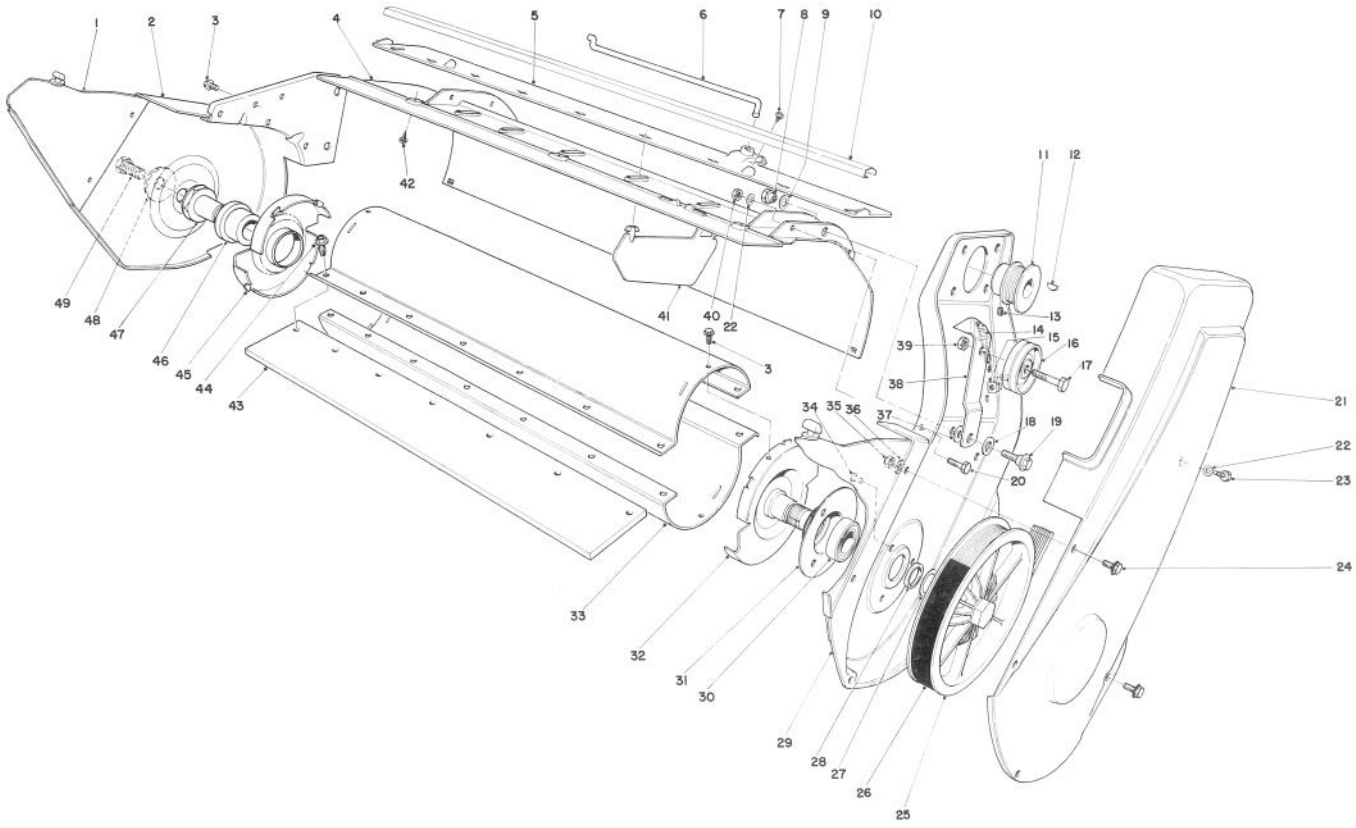

LOWER MAIN FRAME ASSEMBLY (MODEL 38120 & 38130)

Ref. No.	Part No.	Description	No. Used
1	41-8130	Vane – Outside	2
2	39-1060	Side Plate Right	1
3	12-3270	Screw Special	6
4	41-8510	Housing	1
5	41-8480	Vane Mount	1
6	25-5630	Linkage Vane Adjustment	1
7	32104-77	Self Tapping Screw	2
8	17-7010	Pivot Nut	1
9	41-8440	Washer	1
10	42-1680	Moulding Assembly	1
11	25-6400	Engine Pulley	1
12	3257-3	Woodruff Key	1
13	3245-32	Set Screw	2
14	26-9730	Idler Spring	1
15	3290-225	Nut – Retained	1
16	25-5880	Idler Pulley	1
17	323-9	Capscrew	1
18	25-5640	Washer	1
19	27-0410	Shoulder Screw	1
20	321-3	Capscrew	5
21	41-8180	Drive Cover	1
22	3256-22	Washer	6
23	3235-18	Hex Hd. Capscrew	1
24	32105-2	Machine Screw	6
25	23-7360	Rotor Pulley	1
26	25-6430	Belt	1
27	26-0970	Washer	1
28	27-0100	Spacer (Model 38120)	1
*	38-8630	Spacer (Model 38130)	1

Ref. No.	Part No.	Description	No. Used
29	33-2130	Side Plate Left	1
30	27-0070	Ball Bearing (Model 38120 only)	1
*	38-7820	Ball Bearing (Model 38130 only)	1
31	26-9740	Bearing Flange (Model 38120 only)	1
*	38-8620	Bearing Flange (Model 38130 only)	1
32	27-0090	Drive Shaft & End Cap (Model 38120 only)	1
*	38-8610	Drive Shaft & End Cap (Model 38130)	1
33	23-3190	Shell Rotor	2
34	3292-8	Rivet	3
35	3296-2	Locknut	6
36	5-0774	Washer Control Pivot	4
37	5-4460	Washer	1
38	26-8990	Idler Arm	1
39	3296-39	Locknut	1
40	32152-4	Locknut	5
41	39-1540	Vane	7
42	32144-34	Self Tapping Screw	3
43	23-3730	Rotor Blade	2
44	37-0370	Screw	14
45	39-1070	End Cap Assy. R.H. (Incl. Ref. #44)	1
46	39-0790	Bushing Rotor	1
47	39-0830	Rotor Shaft	1
48	3290-340	Washer	1
49	323-41	Patch Lock Capscrew	1

*Not Illustrated

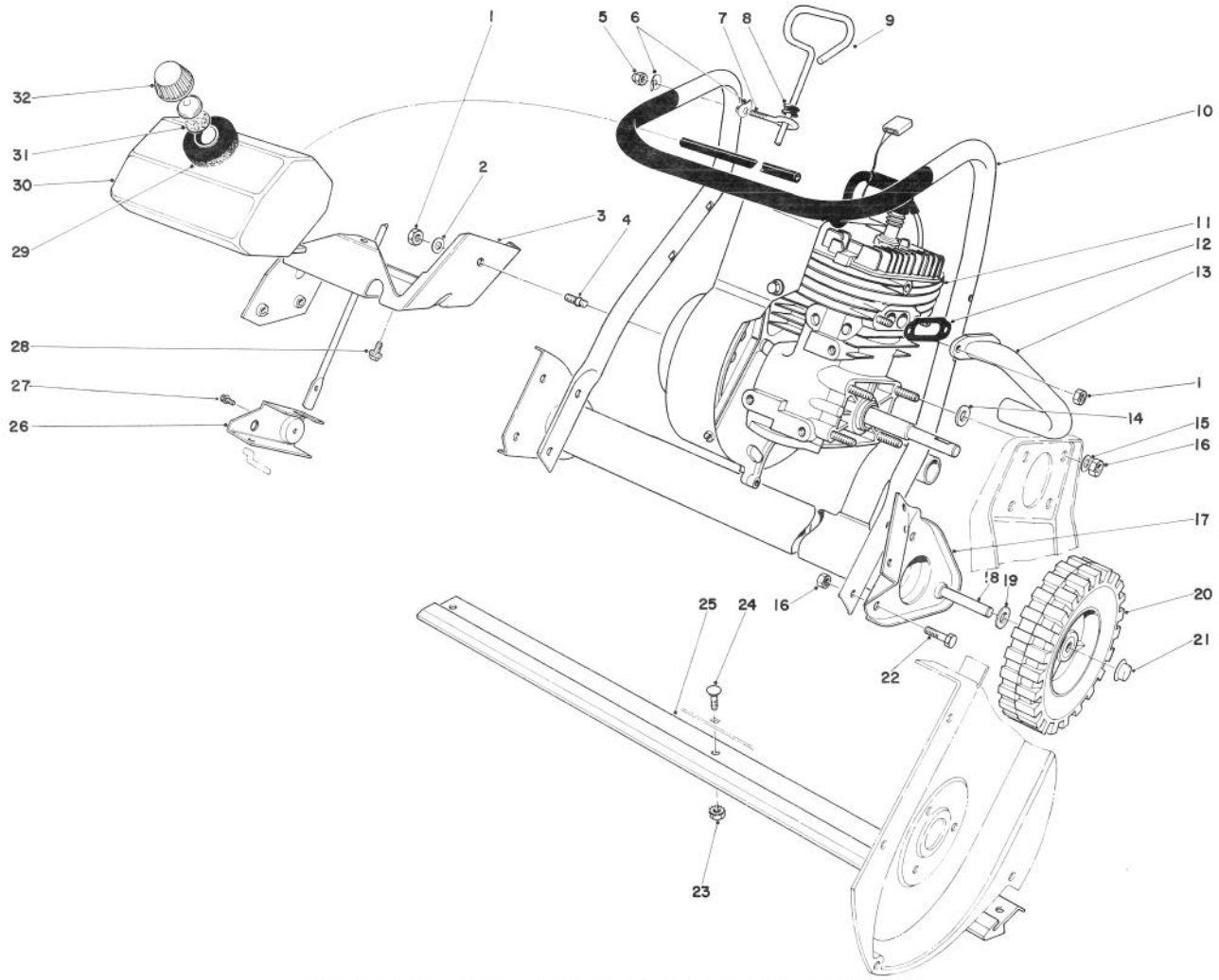

ENGINE ASSEMBLY (MODEL 38120)

Ref. No.	Part No.	Description	No. Used
1	32152-4	Locknut	3
2	7-3315	Washer	1
3	39-0860	Rear Support Engine	1
4	38-8710	Stud	1
5	32111-7	Nut Cap	1
6	3-7501	Washer	2
7	3-9278	Eye Bolt	1
8	237-73	Grommet	1
9	39-0850	Rod – Vane Adjustment	1
10	33-2120	Lower Handle	1
11	221-567	Engine	1
*	221-627	Engine	1
12	23-3810	Gasket – Exhaust Pipe	1
13	41-8240	Exhaust Pipe	1
14	4-2390	Spacer	4
15	3256-23	Washer	4
16	3296-29	Locknut	10
17	26-6550	Muffler	1

Ref. No.	Part No.	Description	No. Used
18	27-0060	Axle	1
19	3256-24	Washer	2
20	23-3250	Wheel	2
21	3290-320	Retainer – Push On	2
22	322-3	Capscrew	6
23	32149-2	Locknut	3
24	3229-1	Carriage Bolt	3
25	23-3170	Scraper	1
26	39-0840	Bracket – Vane Adjustment	1
27	12-5450	Screw Special	1
28	12-3270	Screw Special	3
29	25-1610	Foam Pad	1
30	39-8670	Gas Tank	1
31	20-4620	Gasket	1
32	42-0680	Gas Cap (Incl. Ref. #31)	1
*	8-7279	Loose Parts	1
*	25-9150	Decal Replacement Serial Plate	1

*Not Illustrated

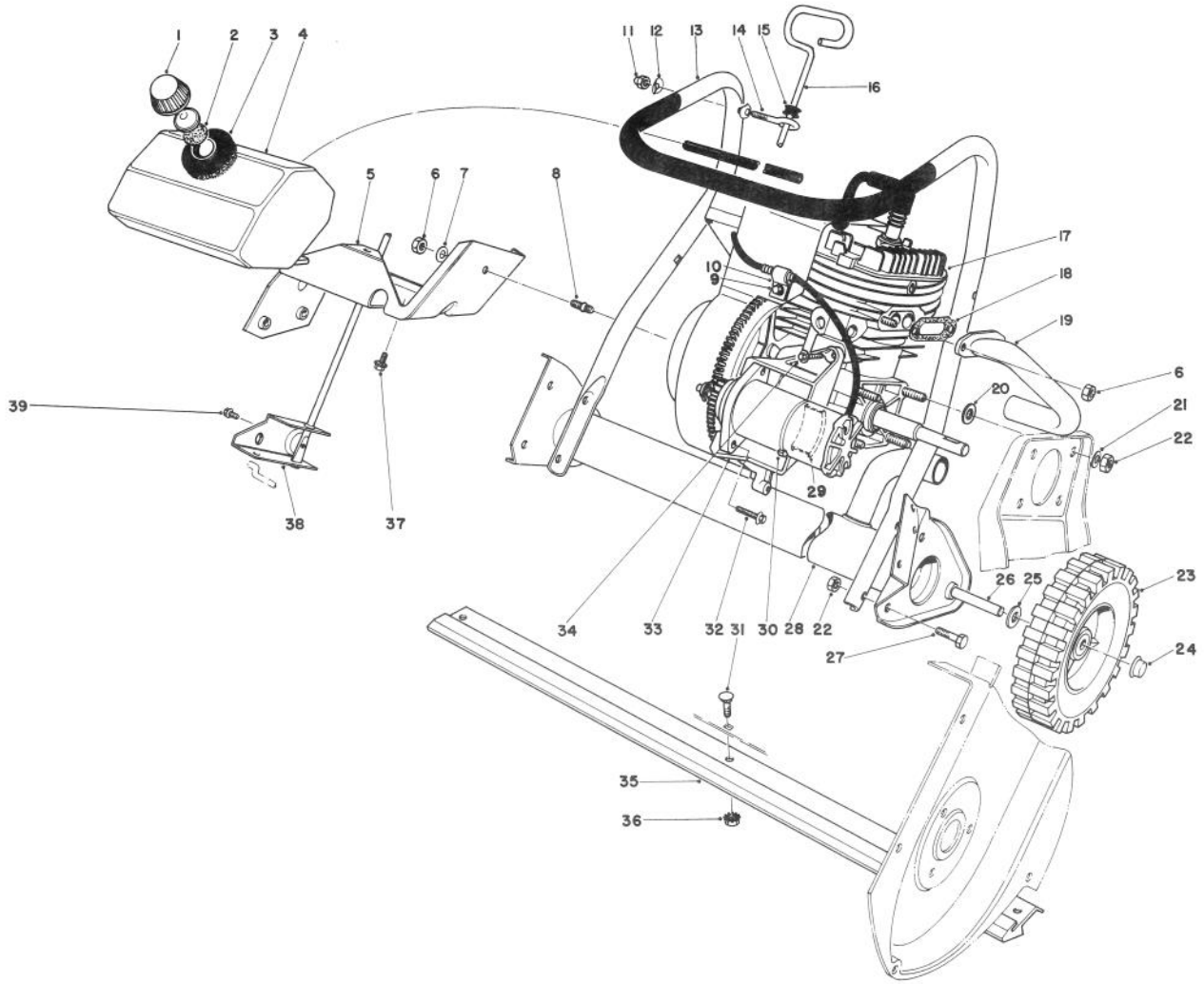

ENGINE ASSEMBLY (MODEL 38130)

Ref. No.	Part No.	Description	No. Used
1	42-0680	Gas Cap (Incl. Ref. #2)	1
2	20-4620	Gasket	1
3	25-1610	Foam Pad	1
4	39-8670	Gas Tank	1
5	39-0860	Rear Support Engine	1
6	32152-4	Locknut	3
7	7-3315	Washer	1
8	38-8710	Stud	1
9	32144-10	Screw – Pentaflo	1
10	2412-65	Cable Clamp	1
11	32111-7	Nut Cap	1
12	3-7501	Washer	2
13	33-2120	Lower Handle	1
14	3-9278	Eye Bolt	1
15	237-73	Grommet	1
16	39-0850	Rod – Vane Adjustment	1
17	221-558	Engine	1
*	221-628	Engine	1
18	23-3810	Gasket – Exhaust Pipe	1
19	41-8240	Exhaust Pipe	1
20	4-2390	Spacer	4

Ref. No.	Part No.	Description	No. Used
21	3256-23	Washer	4
22	3296-29	Locknut	10
23	23-3250	Wheel	2
24	3290-320	Retainer – Push On	2
25	3256-24	Washer	2
26	27-0060	Axle	1
27	322-3	Capscrew	6
28	26-6550	Muffler	1
29	28-9120	Motor Support – Rear	1
30	3290-379	Strap – Motor Tie Down	1
31	3229-1	Carriage Bolt	3
32	32144-26	Screw – Pentaflo	2
33	28-9160	Bracket – Motor Mount	1
34	11-9760	Screw – Pentaflo	3
35	23-3170	Scraper	1
36	32149-2	Locknut	3
37	12-3270	Screw – Special	3
38	39-0840	Bracket – Vane Adjustment	1
39	12-5450	Screw – Special	1
*	8-7279	Loose Parts	1
*	25-9150	Decal Replacement Serial Plate	1

*Not Illustrated

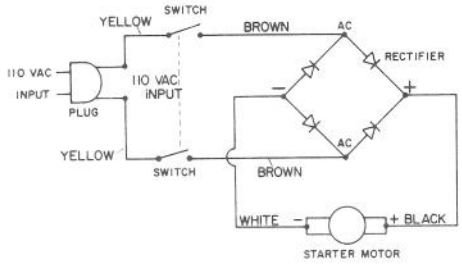

STARTER MOTOR & SWITCH ASSEMBLY (MODEL 38130)

Ref. No.	Part No.	Description	No. Used
1	36-8370	Plug	1
2	32144-27	Plastite Screw	4
3	28-9960	Cap – Switch Housing	1
4	36-8350	Boot – Switch	1
5	36-8340	Switch	1
6	36-8360	Wire – Switch to Rectifier	2
7	37-7600	Bridge Rectifier	1
8	36-8330	Base – Switch Housing	1
9	33-5130	Cable Cover	1
10		Starter Motor	1
11	5-6530	Clip – Retaining	1
12		Helix Pinion Nut	1

Ref. No.	Part No.	Description	No. Used
13	25-3400	Ring – Rubber	1
14		Pinion	1
15	33-5570	Washer	1
16	33-3230	Spring	1
17	33-3210	Pinion Stop	1
18	32151-49	External Retaining Ring	1
*	28-9140	Starter Motor Assembly (Incl. Ref. #10-18)	1
*	36-5350	Pinion Assembly (Incl. Ref. #11-14)	1
*	28-9170	Cord – 7 Ft.	1

*Not Illustrated

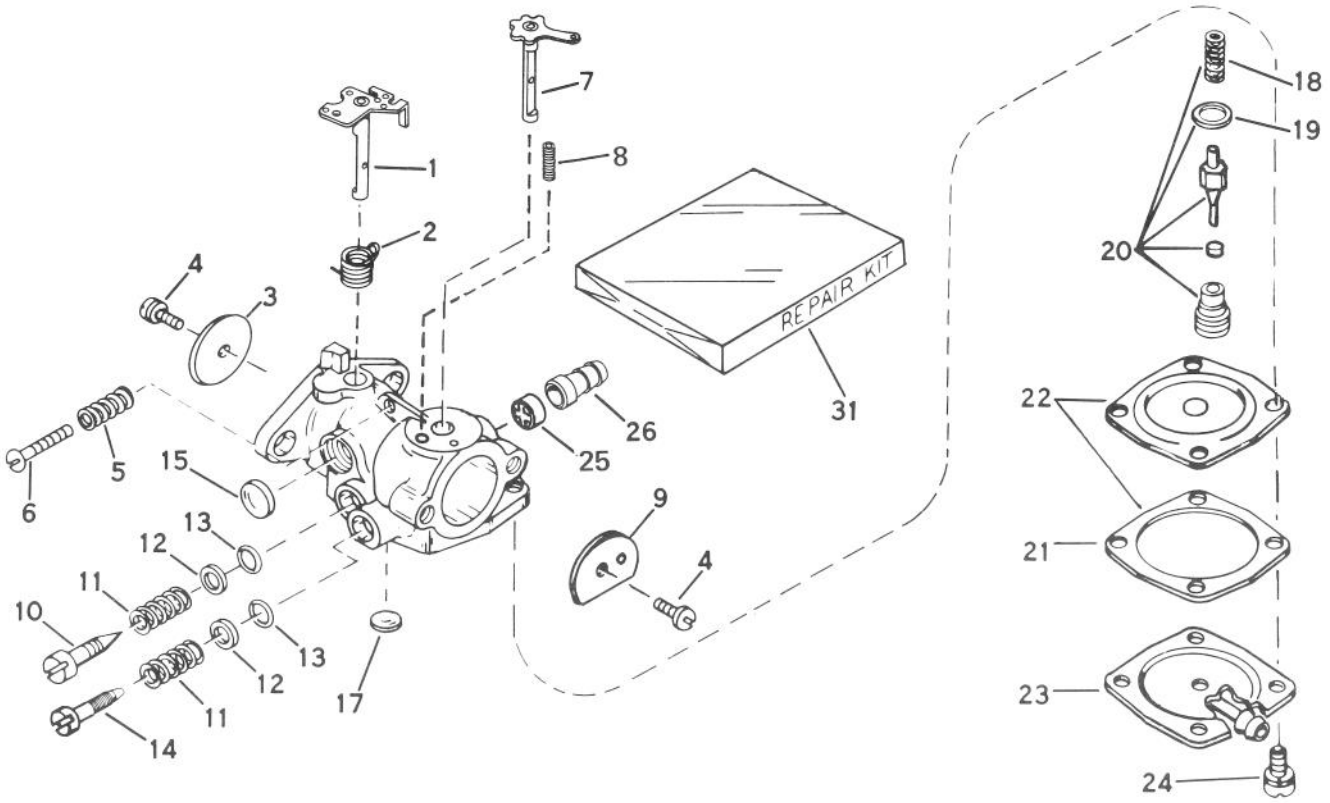

CARBURETOR NO. 631887

Engine Model AH520 Type 1583, 1583B, 1585, & 1585B

CARBURETOR NO. 632101

Engine Model AH520 Type 1583A & 1585A

Ref. No.	Part No.	Description	No. Used
1	631868	Shaft & Lever Assembly, Throttle	1
2	631066	Spring, Return	1
3	631036	Shutter, Throttle	1
4	650506	Screw, Throttle & Choke Shutter	2
5	630766	Spring, Idle Speed	1
6	650417	Screw, Idle Regulating	1
7	631888	Shaft & Lever Assy., Choke	1
8	630735	Spring, Choke Positioning	1
9	31837	Shutter, Choke	1
10	631562	Screw, Idle Adjustment (used on type 1583, 1583B, 1585 & 1585B)	1
10	632102	Screw, Idle Adjustment (used on type 1583A & 1585A)	1
11	630738	Spring, Adjustment Screw (used on type 1583, 1583B, 1585 & 1585B)	2
11	630738	Spring, Idle Adjustment Screw (used on type 1583A & 1585A)	1
12	630739	Washer, Adjustment Screw (used on type 1583, 1583B, 1585 & 1585B)	2
12	630739	Washer, Idle Adjustment Screw (used on type 1583A & 1585A)	1
13	*630740	"O" Ring, Adjustment Screw (used on type 1583, 1583B, 1585 & 1585B)	2
13	*630740	"O" Ring, Idle Adjustment Screw (used on type 1583A & 1585A)	1
14	630898	Screw, Main Adjustment (used on type 1583, 1583B, 1585 & 1585B)	1
15	*630748	Plug, Welch	1
17	*630746	Plug, Welch	1
18	631049	Spring, Valve	1
19	630742	Gasket, Valve Seat	1
20	*630932A	Inlet Needle, Seat, Spring & Gasket Assembly (Incl. Ref. #18 & 19)	1
21	630750	Gasket, Diaphragm	1
22	*630978	Diaphragm Assembly (Incl. Ref. #21)	1
23	631653	Cover, Diaphragm	1
24	650545	Screw, Diaphragm Cover	4
25	631201	Valve, Check	1
26	631803	Fitting, Fuel Inlet	1
31	631893	Repair Kit (Incl. items marked*)	1

ENGINE ASSEMBLY

Engine Model AH520 Type 1583, 1583A, 1583B,
1585, 1585A & 1585B

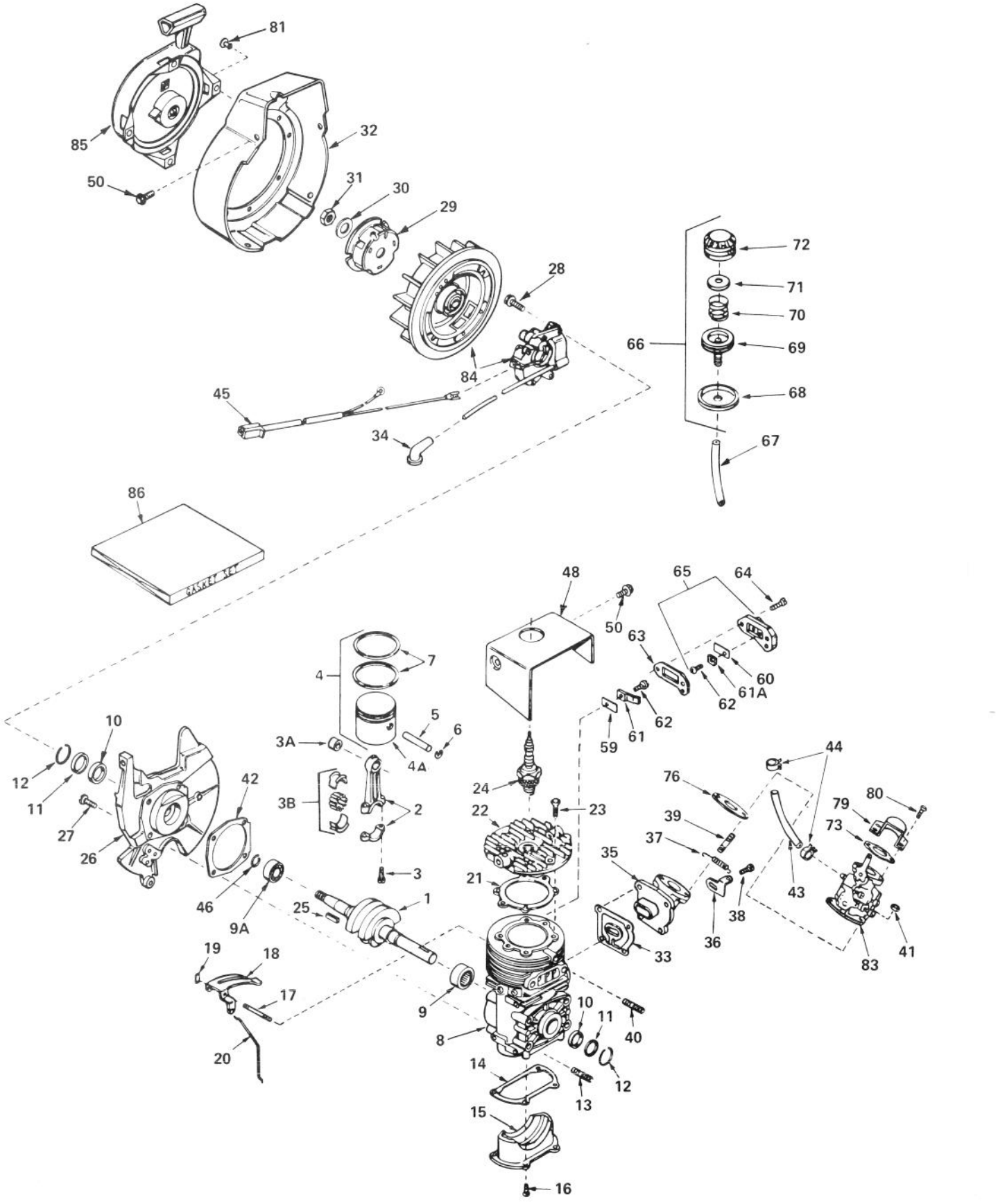

ENGINE ASSEMBLY

Engine Tecumseh Model No. AH520 Type 1583, 1583A, 1583B 1585, 1585A & 1585B

Ref. No.	Part No.	Description	No. Used
1	290489	Crankshaft	1
2	310244	Rod Assembly, Connecting (Incl. Ref. #3, 3A & 3B)	1
3	650633	Screw, Connecting Rod	2
3A	530104A	Bearing Cartridge	1
3B	530149	Bearing & Liner Set, Needle	1
4	310230	Piston (used on type 1583 & 1585)	1
4	310259	Piston Assembly (Incl. Ref. #4A thru 7) (used on type 1583A, 1583B, 1585A & 1585B)	1
4A	310230B	Piston (used on type 1583A, 1583B, 1585A & 1585B)	1
5	310178	Pin, Piston	1
6	310167	Ring, Piston Pin Retaining	2
7	310190	Ring Set, Piston	1
8	250271	Block Assembly, Cylinder (Incl. Ref. #9, 10 thru 13, 17 & 40) (Used on type 1583 & 1585)	1
8	250271B	Block Assy., Cylinder (Incl. Ref. #9, 10 thru 13, 17 & 40) (used on type 1583A, 1583B, 1585A & 1585B)	1
9	530105	Bearing, Needle	1
9A	530110	Bearing, Ball	1
10	510105	Seal, Crankshaft	2
11	510106	Retainer, Crankshaft Seal (used on type 1583 & 1585)	2
11	510106A	Retainer, Crankshaft Seal (used on type 1583A, 1583B, 1585A & 1585B)	2
12	510109A	Spring, Crankshaft Seal Retainer	2
13	650796	Stud	4
14	*510270	Gasket, Cover	1
15	570370	Plate, Cover (used on type 1583 & 1585)	1
15	570370A	Plate, Cover (used on type 1583A, 1583B, 1585A & 1585B)	1
16	650579	Screw, Pan Flex Hd.	4
17	490276	Shaft, Air Vane	1
18	490287	Vane Assembly, Air	1
19	490278	Clip, Air Vane	1
20	490288	Link, Governor	1
21	*510274	Gasket, Cylinder Head	1
22	250240	Head, Cylinder (used on type 1583 & 1585)	1
22	250240A	Head, Cylinder (used on 1583A, 1583B, 1585A & 1585B)	1

Ref. No.	Part No.	Description	No. Used
23	650477	Screw, Pan Flex Hd.	4
24	611005	Plug, Spark (RJ-18Y or equivalent)	1
25	650496	Key, Flywheel (used on type 1583 & 1585)	1
25	610961	Key, Flywheel (used on type 1583A, 1583B, 1585A & 1585B)	1
26	350390	Base Assembly, Shroud (Incl. Ref. #10, 11 & 12) (used on type 1583, 1583A & 1583B)	1
26	350388	Base Assembly, Shroud (Incl. Ref. #10, 11 & 12) (used on type 1585, 1585A & 1585B)	1
27	650497	Screw, Pan Flex Hd.	4
28	650747	Screw, Hex Washer Hd.	2
29	590416	Cup, Starter	1
30	650763	Washer, Spring	1
31	650390	Nut, Flywheel	1
32	350392	Housing, Blower (used on type 1583, 1583A & 1583B)	1
32	350391	Housing, Blower (used on type 1585, 1585A & 1585B)	1
33	*510312	Gasket, Port	1
34	610118	Cover, Spark Plug	1
35	570627	Elbow Assembly, Adapter	1
36	570626	Lever, Adjusting	1
37	490286	Spring, Adjusting Lever	1
38	650576	Screw, Pan Flex Hd.	4
39	650700	Stud, Carburetor	2
40	650801	Stud, Exhaust	2
41	650457	Nut, Hex	2
42	*510292	Gasket, Shroud Base	1
43	30705	Line, Fuel	1
44	26460	Clamp, Fuel Line	2
45	611022	Harness, Wire	1
46	570630	Ring, Retaining	1
48	350389	Shroud, Cylinder (used on type 1583 & 1585)	1
50	650356	Screw, Hex Washer Hd. Powerlock Thread (used on type 1583 & 1585)	6
50	630356	Screw, Hex Washer Hd. Powerlock Thread (used on type 1583A, 1583B, 1585A & 1585B)	4
59	470136	Reed, Compression Release	1
60	470135	Reed, Compression Release	1
61	470151	Plate, Reed Hold Down	1
61A	470137	Plate, Reed Hold Down	1
62	650654	Screw, Pan Hd. Taptite	2

ENGINE ASSEMBLY (Continued)

Engine Tecumseh Model No. AH520 Type 1583, 1583A, 1583B, 1585, 1585A & 1585B

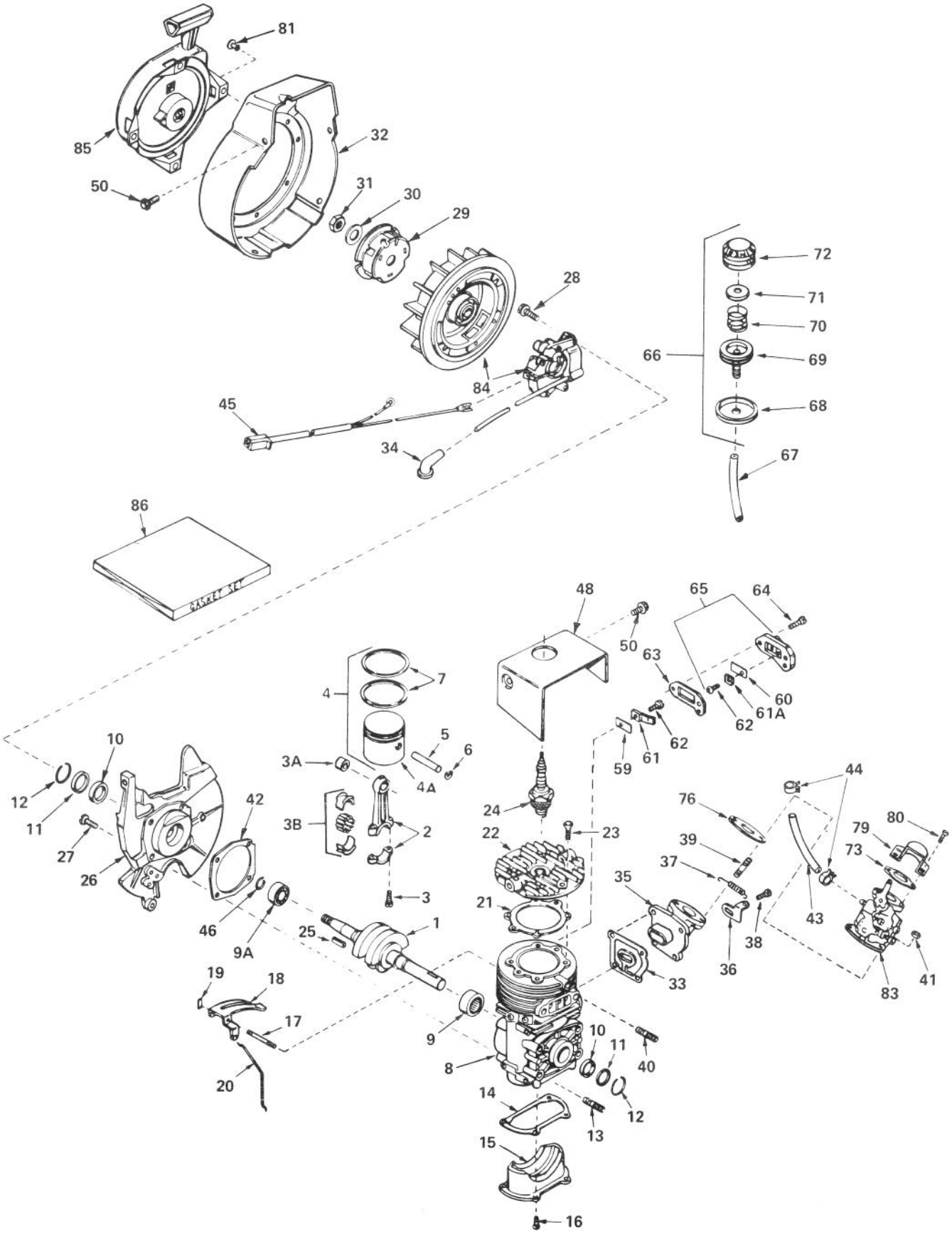

ENGINE ASSEMBLY (Continued)

Engine Tecumseh Model No. AH520 Type 1583, 1583A, 1583B, 1585, 1585A & 1585B

Ref. No.	Part No.	Description	No. Used
63	*510263	Gasket, Compression Release	1
64	650576	Screw, Pan Flex Hd.	2
65	570437A	Cover Assembly, Compression Release (Incl. Ref. #60, 61A & 62)	1
66	570629	Primer Assembly (Incl. Ref. #68 thru 72) (used on type 1583 & 1585)	1
66	570629A	Primer Assembly (Incl. Ref. #68, 69 & 72) (used on type 1583A, 1583B, 1585A & 1585B)	1
67	32180B	Line, Primer (used on type 1583 & 1585)	1
67	32180B	Line, Primer (used on type 1583A, 1583B, 1585A & 1585B)	1
68	32312	Retainer, Primer Bulb	1
69	32184	Body Primer	1
70	570443	Spring, Primer Bulb (used on type 1583, 1583A, 1585 & 1585A)	1
71	670444	Washer, Primer Bulb (used on type 1583, 1583A, 1585 & 1585A)	1
72	570442	Bulb, Primer (used on type 1583 & 1585)	1
72	570442A	Bulb, Primer (used on type 1583A, 1583B, 1585A & 1585B)	1
73	510206	Gasket	1
76	*510213	Gasket, Carburetor	1
79	570434	Baffle, Air	1
80	650229	Screw, Rd. Hd. Sems	2
81		Rivet, Pop (3/16" dia.) (Can be purchased locally)	4
83	631887	Carburetor (Incl. Ref. #76) (used on type 1583, 1583B, 1585 & 1585B)	1
83	632101	Carburetor (Incl. Ref. #76) (used on type 1583A & 1585A)	1
84	610772A	Magneto (The complete magneto is not available as an assembly. The magneto number is shown for reference purposes only. Order component parts individually, as shown in parts list.) (Type 1583, 1583A & 1583B)	1
84	610794A	Magneto (The complete magneto is not available as an assembly. The magneto number is shown for reference purposes only. Order component parts individually, as shown in parts list.) (Type 1585, 1585A & 1585B)	1
85	590537	Starter Assembly, Rewind	1
86	510264D	Gasket Set (Incl. items marked*)	1

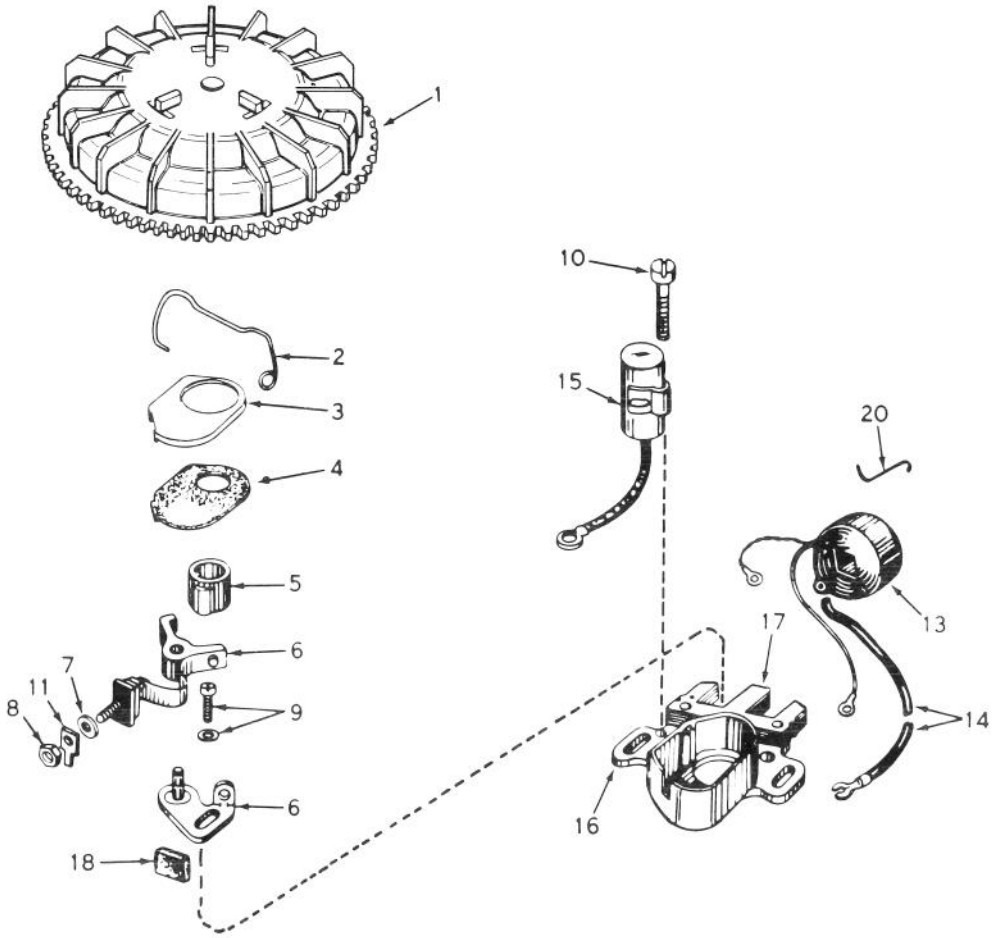

MAGNETO NO. 610772A

Engine Model AH520 Type 1583, 1583A & 1583B

MAGNETO NO. 610794 A

Engine Model AH520 Type 1585, 1585A & 1585B

Ref. No.	Part No.	Description	No. Used
1	610757A	Flywheel (Incl. Ref. #3 & 4) (used on type 1583, 1583A & 1583B	1
1	610781A	Flywheel (Incl. Ref. #3 & 4) (used on type 1585, 1585A & 1585B)	1
2	30551	Spring, Breaker Box Dust Cover	1
3	610947	Cover, Breaker Box Dust	1
4	610948	Gasket, Dust Cover	1
5	30552	Cam, Breaker	1
6	30547A	Breaker Assembly	1
7	610385	Washer, Terminal	1
8	610408	Nut, Terminal	1

Ref. No.	Part No.	Description	No. Used
9	29181	Screw & Washer Assembly, Breaker	1
10	610593	Screw, Condenser Fastening	1
11	33356	Tab Ground Terminal	1
13	30560A	Coil Assembly (Incl. Ref. #14)	1
14	30554	Wire, Ignition Lead	1
15	30548A	Condenser	1
16	30545	Core & Plate Group	1
17	30561B	Stator Assembly (Incl. Ref. #2, 3, 4, 6 thru 16, 18 & 20)	1
18	30549	Felt, Cam Wiper	1
20	31311	Clip, Coil Locking	1

*The complete magneto is not available as an assembly. The magneto number is shown for reference purposes only. Order component parts individually, as shown in parts list.

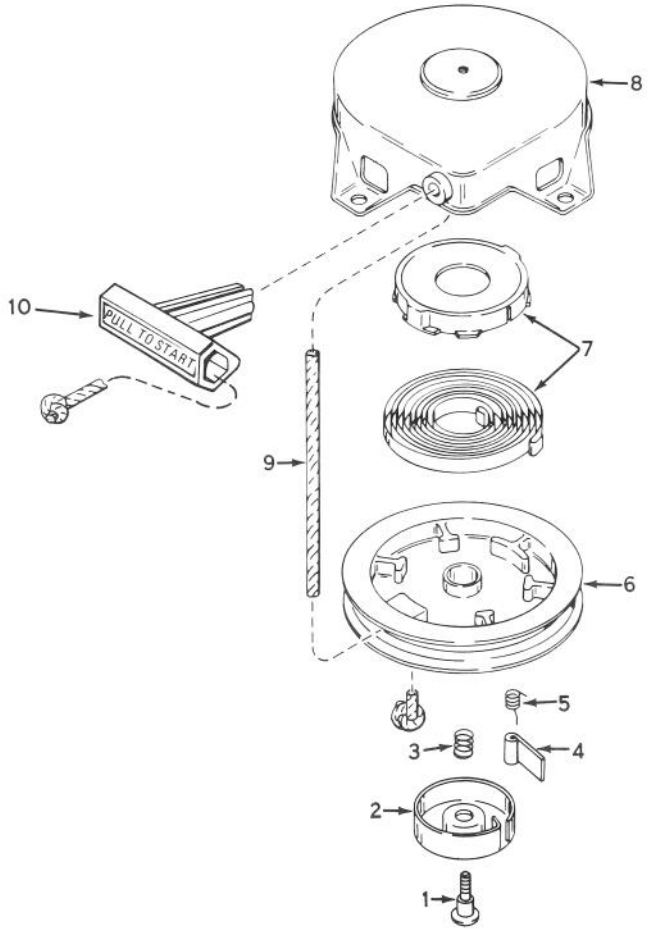

SHROUD & REWIND STARTER NO. 590537 (ENGINE MODEL AH520 TYPE 1583, 1583A, 1583B, 1585, 1585A & 1585B)

Ref. No.	Part No.	Description	No. Used
1	590409A	Screw, Retainer	1
2	590410	Retainer, R.H.	1
3	590411	Spring, Brake	1
4	590148	Dog, Starter	1
5	590412	Spring, R.H. Dog	1

Ref. No.	Part No.	Description	No. Used
6	590413A	Pulley	1
7	590414	Spring & Keeper Assembly	1
8	590536	Housing Assembly, Starter	1
9	590535	Rope, Starter	1
10	590452	Handle Assembly, Starter	1

The Toro Promise

A ONE YEAR LIMITED WARRANTY

The Toro Company promises to repair any TORO Product if defective in materials or workmanship. The following time periods from the date of purchase apply:

Residential Product	1 Year
Residential Products Used Commercially . . .	45 Days

The costs of parts and labor are included, but the customer pays the transportation costs. Just return any residential product to an Authorized TORO Service Dealer or TORO Distributor.

Should you feel your TORO Product is defective and wish to rely on The Toro Promise, the following procedure is recommended:

1. Contact any Authorized TORO Service Dealer, TORO Master Service Dealer, or TORO Distributor (the Yellow Pages of your telephone directory is a good reference source).
2. He will either instruct you to return the product to him or recommend another Authorized TORO Service outlet which might be more convenient.
3. Bring the product along with your original sales slip, or other evidence of purchase date, to the service dealer.
4. The servicing dealer will inspect the unit, advise you whether the product is defective and, if so, make all repairs necessary to correct the defect without extra charge to you.

If for any reason you are dissatisfied with the dealer's analysis of the defect or the service performed, you may contact us.

Write:

TORO Consumer Service Department
8111 Lyndale Avenue South
Minneapolis, Minnesota 55420

The above remedy of product defects through repair by an Authorized TORO Service Dealer is the purchaser's sole remedy for any defect.

THERE IS NO OTHER EXPRESS WARRANTY. ALL IMPLIED WARRANTIES OF MERCHANTABILITY AND FITNESS FOR USE ARE LIMITED TO THE DURATION OF THE EXPRESS WARRANTY.

Some states do not allow limitations on how long an implied warranty lasts, so the above limitation may not apply to you.

This warranty applies only to parts or components which are defective and does not cover repairs necessary due to normal wear, misuse, accidents, or lack of proper maintenance. Regular, routine maintenance of the unit to keep it in proper operating condition is the responsibility of the owner.

All warranty repairs reimbursable under The Toro Promise must be performed by an Authorized TORO Service Dealer using Toro approved replacement parts.

Repairs or attempted repairs by anyone other than an Authorized TORO Service Account are not reimbursable under The Toro Promise. In addition, these unauthorized repair attempts may result in additional malfunctions, the correction of which is not covered by warranty.

THE TORO COMPANY IS NOT LIABLE FOR INDIRECT, INCIDENTAL OR CONSEQUENTIAL DAMAGES IN CONNECTION WITH THE USE OF THE PRODUCT INCLUDING ANY COST OR EXPENSE OF PROVIDING SUBSTITUTE EQUIPMENT OR SERVICE DURING PERIODS OF MALFUNCTION OR NON-USE.

Some states do not allow the exclusion or limitation of incidental or consequential damages, so the above limitation or exclusion may not apply to you.

This warranty gives you specific legal rights, and you may also have other rights which vary from state to state.

COUNTRIES OTHER THAN THE UNITED STATES OR CANADA

Customers who have purchased TORO products exported from the United States or Canada should contact their TORO Distributor (Dealer) to obtain guarantee policies for your country, province or state. If for any reason you are dissatisfied with your Distributor's service or have difficulty obtaining guarantee information, contact the TORO importer. If all other remedies fail, you may contact us at The Toro Company.

International Group
Service Department
One Corporate Center
7401 Metro Boulevard
Minneapolis, Minnesota 55435 U.S.A.

Compliance with Radio Interference Regulations Certified.
Certifie Conforme au Reglement sur le Brouillage Radioelectrique.

PRODUCT CHANGES

In an effort to make improvements available to TORO owners as quickly as possible, minor changes are incorporated into Toro's products from time to time that do not become immediately shown in the Parts Catalog. If such a change apparently has been made in your unit, which is not reflected in your manual, see your TORO Distributor or his Authorized TORO Service Dealer for information and part numbers.

IDENTIFICATION AND ORDERING

Model and Serial Numbers

The S-200 has two identification numbers. A model number and a serial number. The two numbers are stamped on a decal which is located on right side of rotor housing, just ahead of the right wheel. In any correspondence concerning the S-200, supply model and serial numbers to assure that correct information and replacement parts are obtained.

To order replacement parts from an Authorized TORO Service Dealer, supply the following information:

1. Model and serial numbers of the S-200.
2. Part number, description, and quantity of part(s) desired.

NOTE: Do not order by reference number if a parts catalog is being used; use the PART NUMBER.

Keep Your TORO All Toro Genuine TORO PARTS & ACCESSORIES ***Insist on Genuine Toro Parts***

MAINTENANCE RECORD

Date	Hours Used	Check Scraper	Check Belt	Check Spark Plug	Preparing For Storage	Comments

MAINTENANCE RECORD

Date	Hours Used	Check Scraper	Check Belt	Check Spark Plug	Preparing For Storage	Comments