FORM NO. 3311-666

TORO®

19" H.P. MODEL NO. 16300-1000001 & UP
21" H.P. MODEL NO. 16310-1000001 & UP

PARTS CATALOG

19" AND 21" H.P. FINGERTIP START SIDE DISCHARGE

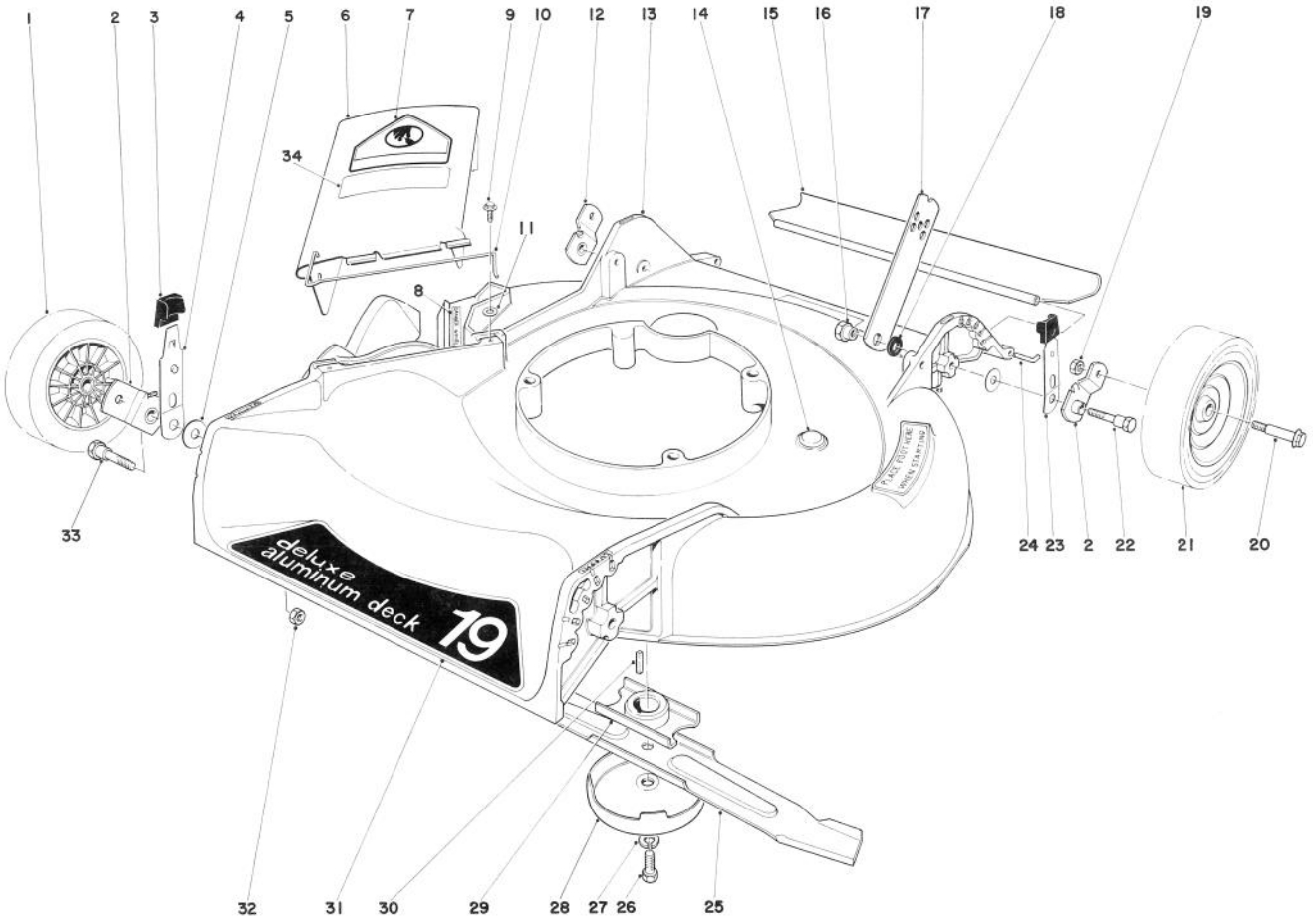

HOUSING ASSEMBLY

Ref. No.	Part No.	Description	No. Used
1	17-4140	Wheel & Tire Assembly (Model 16300)	2
*	17-4120	Wheel & Tire Assembly (Model 16310)	2
2	20-2140	Pivot Arm "A"	2
3	25-7740	Knob Arm	4
4	25-8000	Spring Arm	2
5	5-4460	Pivot Washer	4
6	27-7810	Deflector – Cover Assembly (Incl. Ref. #7, 10 & 34)	1
7	39-5770	Decal – Danger	1
8	22-7350	Decal – Danger	1
9	12-3270	Screw – Special	2
10	20-2640	Hinge Spring	1
11	3256-22	Washer	2

Ref. No.	Part No.	Description	No. Used
12	20-2130	Pivot Arm "B"	2
13	6-7389	Housing (Model 16300)	1
*	6-7399	Housing (Model 16310)	1
14	2410-54	Plug	1
15	22-4960	Rear Shield (Model 16300)	1
*	22-4950	Rear Shield (Model 16310)	1
16	27-6520	Nut Handle Pivot	2
17	27-7070	Latch – Handle (Model 16300)	2
*	27-7080	Latch – Handle (Model 16310)	2
18	27-6510	Spacer – Handle Latch	2
19	32146-6	Nut	4
20	3-2652	Wheel Bolt	4
21	17-4120	Wheel & Tire Assembly	2

*Not Illustrated

COPYRIGHT © ALL RIGHTS RESERVED
The Toro Company – 1981
MINNEAPOLIS, MN 55420 – U.S.A.

PRICE $1.00

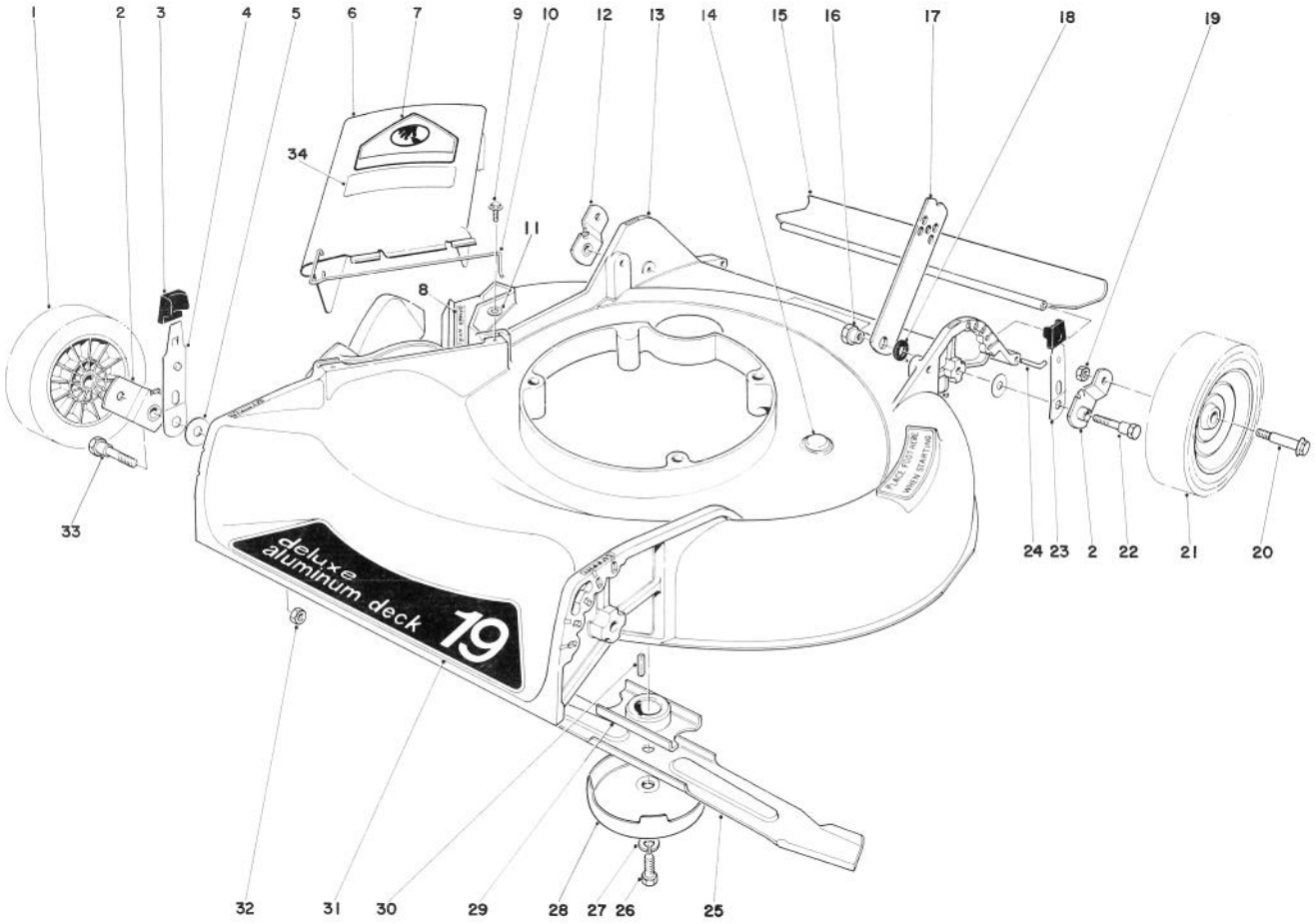

HOUSING ASSEMBLY (Continued)

Ref. No.	Part No.	Description	No. Used
22	28-8880	Pivot Screw	2
23	27-7240	Spring Arm Assembly (Model 16300)	2
*	25-8000	Spring Arm Assembly (Model 16310)	2
24	33-3200	Rod Shield (Model 16300)	1
*	33-3201	Rod Shield (Model 16310)	1
25	20-2730	Blade (Model 16300)	1
*	20-2720	Blade (Model 16310)	1
26	3-5246	Screw Special	1
27	3253-22	Lockwasher	1

Ref. No.	Part No.	Description	No. Used
28	8-4240	Anti Scalp Cup	1
29	20-2750	Blade Retainer	1
30	27-8590	Square Key	1
31	40-2230	Decal – 19" (Model 16300)	1
*	40-2220	Decal – 21" (Model 16310)	1
32	32146-5	Nut	2
33	25-3440	Pivot Screw	2
34	39-9130	Decal – Caution	1
*	8-9909	Loose Parts	1
*	25-9150	Decal–Replacement Serial Plate	1

*Not Illustrated

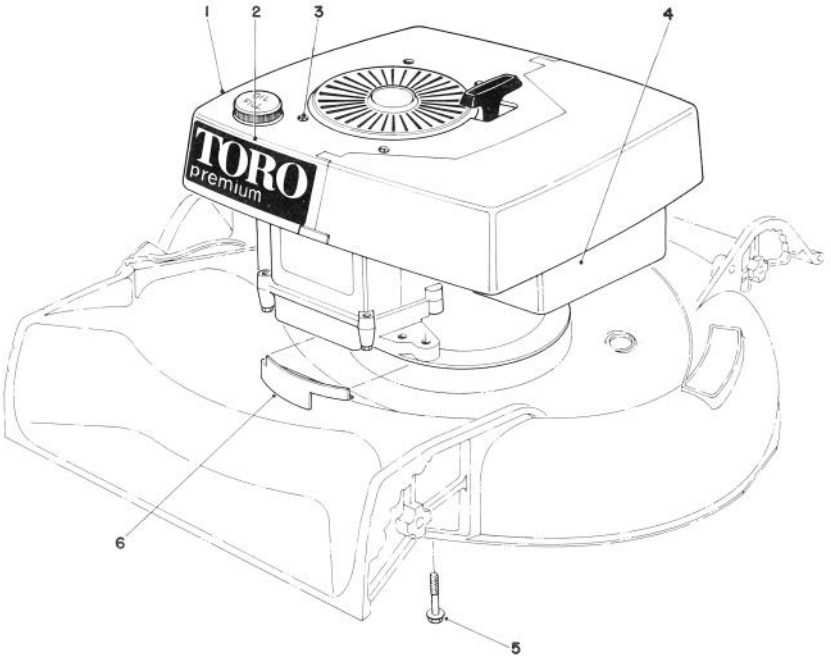

ENGINE ASSEMBLY

Ref. No.	Part No.	Description	No. Used
1	37-9830	Shroud	1
2	40-2570	Decal — Toro Premium	1
3	32104-94	Screw	4
4	221-607	Engine (Model 16300)	1

Ref. No.	Part No.	Description	No. Used
*	221-608	Engine (Model 16310)	1
5	11-0580	Screw	3
6	27-7470	Cap Housing	1

*Not Illustrated

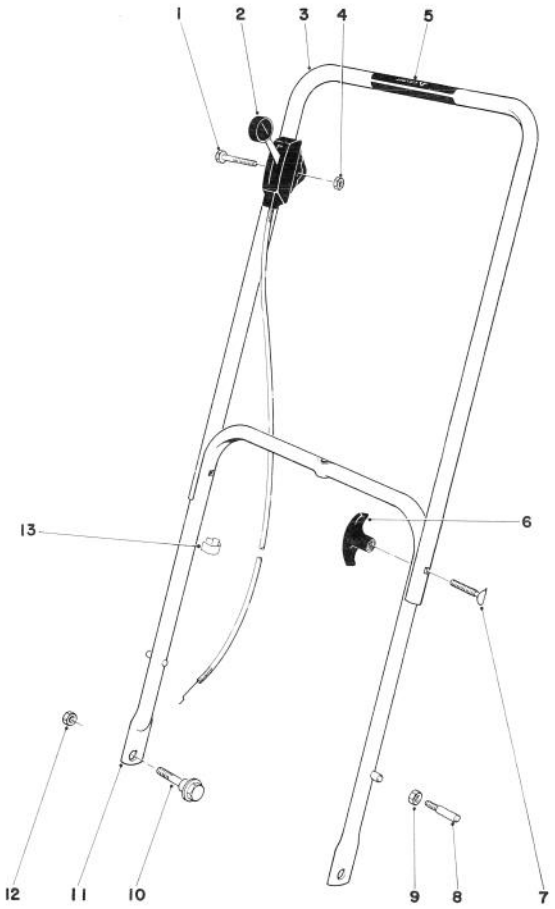

HANDLE ASSEMBLY

Ref. No.	Part No.	Description	No. Used
1	321-10	Capscrew	1
2	33-2531	Throttle Control	1
3	38-1270	Upper Handle	1
4	32146-17	Locknut	1
5	29-6290	Decal — Danger	1
6	233-41	Handle Knob	2
7	6-6330	Handle Screw	2
8†	17-9380	Handle Pin	2
9†	32146-8	Locknut	2
10	27-7210	Shoulder Screw	2
11	38-1290	Lower Handle (Model 16300)	1
*	38-1260	Lower Handle (Model 16310)	1
12	32146-5	Nut	2
13	218-466	Clip	1

*Not Illustrated
†Service Replacement Parts.

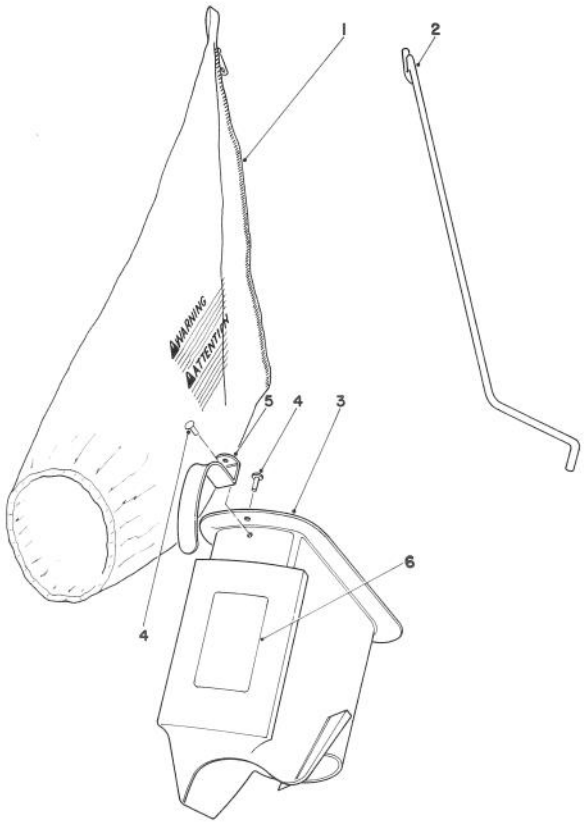

BAGGING KIT NO. 36-8380 (OPTIONAL)

Ref. No.	Part No.	Description	No. Used
1	6-0929	Grass Bag	1
2	20-4590	Bag Rod	1
3	6-1089	Grass Chute (Incl. Ref. #4 & 5)	1

Ref. No.	Part No.	Description	No. Used
4	3295-26	Rivet	2
5	20-4650	Handle Chute	1
6	36-5230	Decal – Bag Chute	1

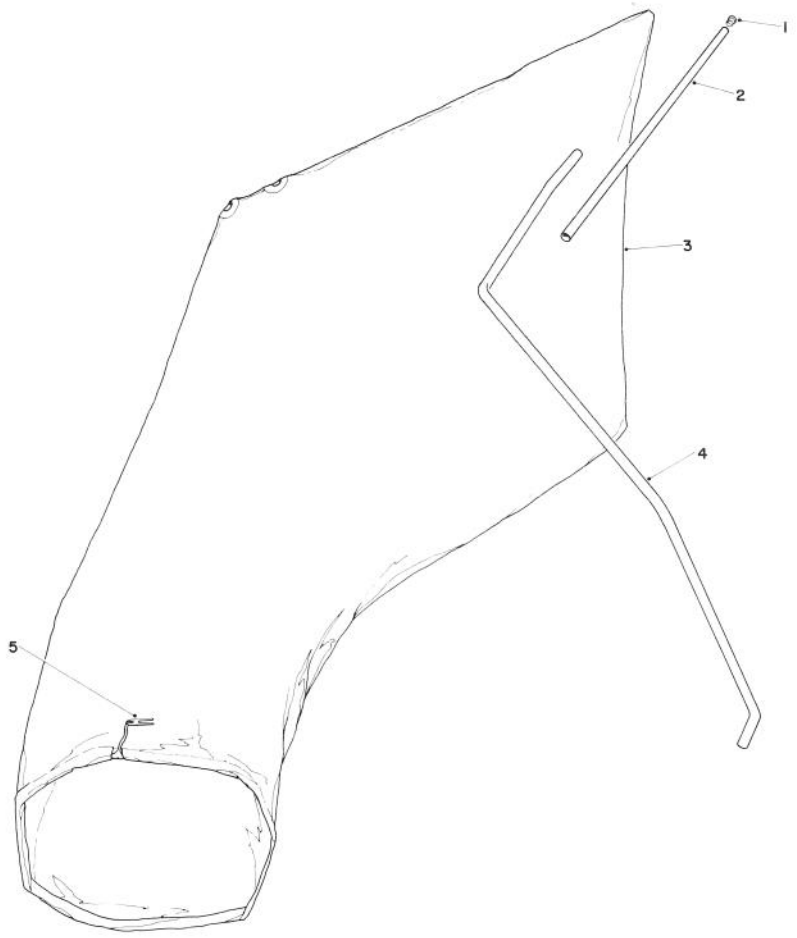

GIANT BAGGING KIT NO. 29-9750 (OPTIONAL)

Ref. No.	Part No.	Description	No. Used
1	2410-29	Cap	1
2	29-7000	Tube 28"	1
*	11-0650	Tube 25"	1

Ref. No.	Part No.	Description	No. Used
3	8-4719	Bag (Incl. Ref. #5)	1
4	22-4820	Hanger Rod	1
5	3-2781	Bag Cord Fasteners	1

*Not Illustrated

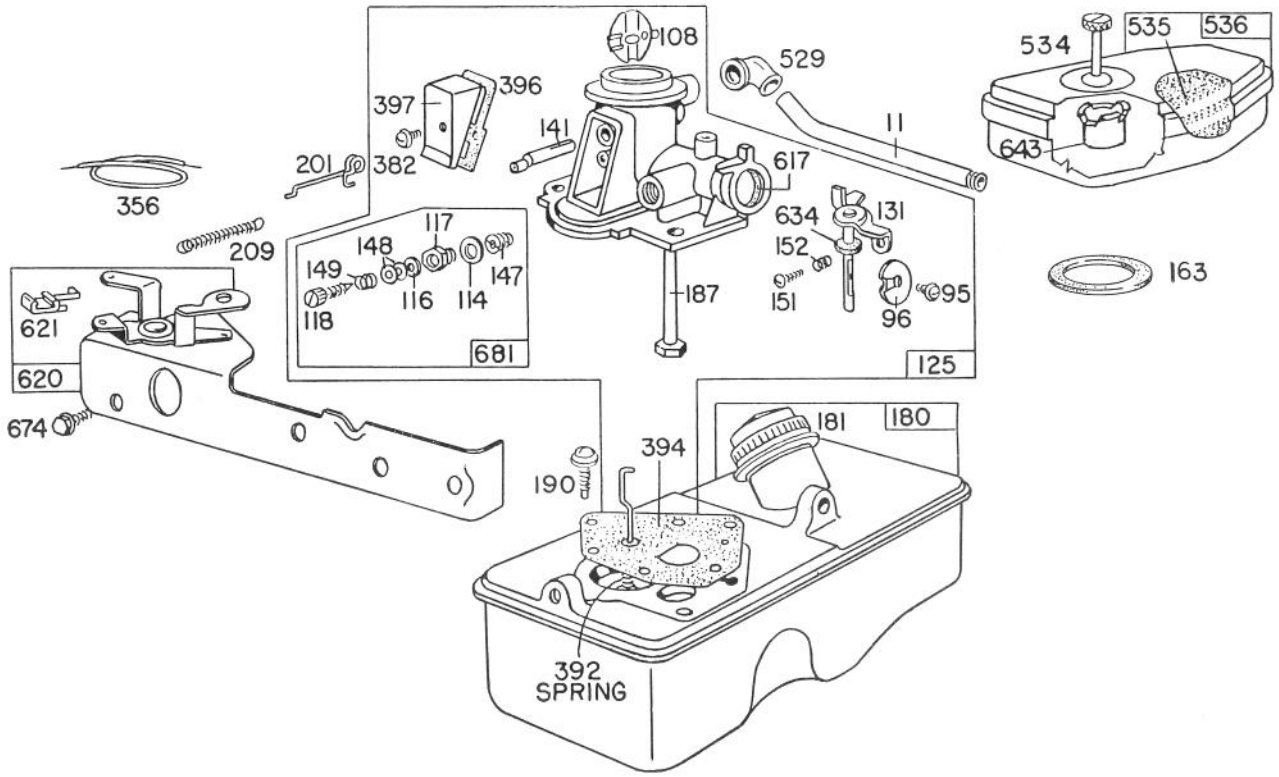

BRIGGS & STRATTON CARBURETOR ASSEMBLY MODEL 92508-1033-01 FOR 19" HAND PROPELLED MODEL 16300

Ref. No.	Part No.	Description	No. Used
11	230802	Tube – Breather	1
95	93499	Screw – Throttle Valve Mtg.	1
96	211203	Valve – Throttle	1
108	298819	Valve – Choke	1
114	66594	Gasket – Needle Valve Nut	1
116	65978	Packing – Needle Valve	1
117	230590	Nut – Needle Valve	1
118	23433	Valve – Needle	1
125	390064	Carburetor Assembly	1
131	299977	Shaft and Lever – Throttle	1
141	68908	Shaft – Choke	1
147	230591	Seat – Needle Valve	1
148	22235	Washer – Needle Valve	2
149	26336	Spring – Needle Valve	1
151	93524	Screw – Machine, Rd. Hd.	1
152	260746	Spring – Throttle Adj.	1
163	271139	Gasket – Air Cleaner Mtg.	1
180	299973	Tank Assembly – Fuel	1
181	298425	Cap – Fuel Tank	1
187	296476	Pipe – Fuel	1

Ref. No.	Part No.	Description	No. Used
190	93440	Screw – Fuel Tank Mtg.	1
201	261027	Link – Governor	1
209	261419	Spring – Governor	1
356	298479	Wire – Ground	1
382	93545	Screw – Choke Link Cover	1
392	261016	Spring – Diaphragm	1
394	299637	Diaphragm – Carburetor	1
396	270571	Gasket – Choke Link Cover	1
397	211678	Cover – Choke Link	1
529	67838	Grommet – Breather	1
534	93374	Screw – Air Cleaner	1
535	270579	Element – Air Cleaner	1
536	390055	Cleaner Assembly – Air	1
617	270344	Seal – Intake Tube	1
620	299974	Plate – Carburetor Control	1
621	297472	Switch – Stop	1
634	270167	Washer – Throttle Shaft (Felt)	1
643	221321	Cup – Air Cleaner	1
674	93447	Screw – Tank to Bracket	1
681	299060	Needle Valve Kit	1

ENGINE BRIGGS & STRATTON MODEL 92508-1033-01
FOR 19" HAND PROPELLED MODEL 16300

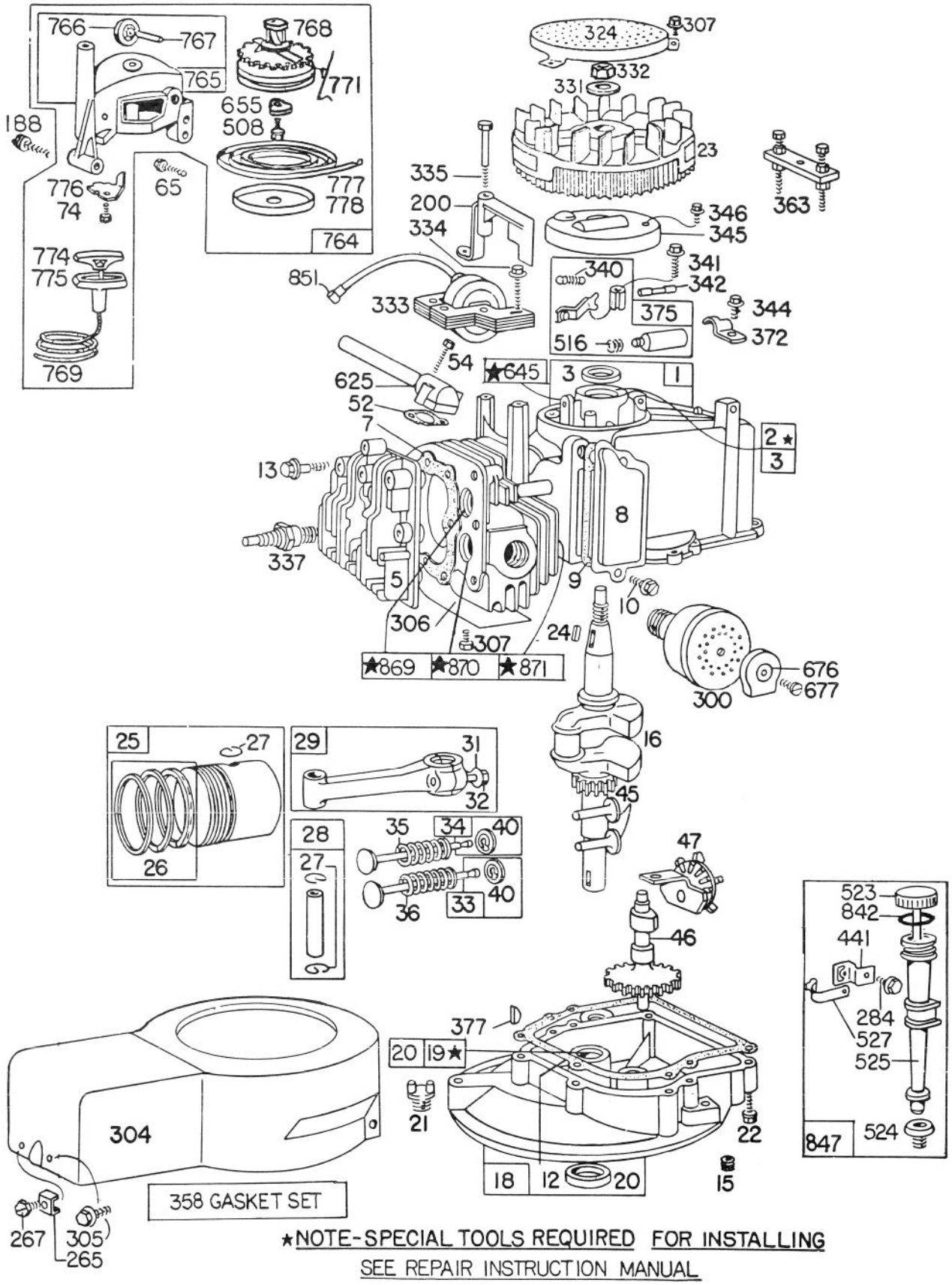

★NOTE-SPECIAL TOOLS REQUIRED FOR INSTALLING
SEE REPAIR INSTRUCTION MANUAL

ENGINE BRIGGS & STRATTON MODEL 92508-1033-01
FOR 19" HAND PROPELLED MODEL 16300

Ref. No.	Part No.	Description	No. Used
1	298988	Cylinder Assembly	1
2	293708	Bushing – Cylinder **Note:** Requires special tools for installation.	1
3	299819	Seal – Oil	1
5	211479	Head – Cylinder	1
7	270341	Gasket – Cylinder Head	1
8	298383	Breather – Valve Chamber	1
9	*270239	Gasket – Valve Cover	1
10	93394	Screw – Breather and P.T.O. Gear Sump Cover Mtg. (Ref. #86)	1
12	*270833	Gasket – Crankcase – .015" thick (Standard)	1
	*270895	Gasket – Crankcase – .005" thick	1
	*270896	Gasket – Crankcase – .009" thick	1
13	93111	Screw – Cylinder Head	
15	93418	Plug – Oil Drain (Socket Head)	1
16	261293	Crankshaft	1
18	390810	Sump – Oil	1
19	293709	Bushing – Oil Sump **Note:** Requires special tool for installation.	1
20	391483	Seal – Oil	1
21	66768	Plug – Oil Filler (Used on Type -01 Only)	1
22	93032	Screw – Sump Mtg.	1
23	299982	Flywheel – Magneto	1
24	61760	Key – Flywheel	1
25	298904	Piston Assy. – Standard	1
	298905	Piston Assy. – .010" O.S.	1
	298906	Piston Assy. – .020" O.S.	1
	298907	Piston Assy. – .030" O.S. **RING SETS:** **Note:** For Chrome Piston Ring Set – standard size – order Part No. 299742.	1
26	298982	Ring Set – Standard Piston	1
	298983	Ring Set – .010" O.S. Piston	1
	298984	Ring Set – .020" O.S. Piston	1
	298985	Ring Set – .030" O.S. Piston	1
27	26026	Lock – Piston Pin	1
28	298909	Pin Assy. – Piston – Standard	1
	298908	Pin Assy. – Piston – .005" O.S.	1
29	294201	Rod Assy. – Connecting **Note:** For Connecting Rod with .020" undersize Crankpin Bore – order No. 296079	1
31	220756	Lock – Conn. Rod Screw	1
32	92296	Screw – Connecting Rod	1
33	296676	Valve – Exhaust	1
34	296677	Valve – Intake	1
35	260552	Spring – Intake Valve	1
36	26478	Spring – Exhaust Valve	1
40	93312	Retainer – Valve Spring	1
45	230173	Tappet – Valve	1
46	210453	Gear – Cam	1
47	294652	Oil Slinger Gear and Bracket	1
52	*270345	Gasket – Intake Elbow	1
54	93485	Screw – Intake Elbow Mtg.	1
65	93587	Screw – Vertical Pull Starter Mtg.	1
74	93490	Screw	1
188	93585	Screw – Fuel Tank and Starter Mtg.	1
200	68388	Blade – Governor	1
265	22372	Clamp – Casing	1

Ref. No.	Part No.	Description	No. Used
267	93469	Screw – Clamp Mtg.	1
284	93572	Screw – Clamp Mtg.	1
300	391435	Muffler – Exhaust	1
304	390279	Housing – Blower	1
305	93559	Screw – Blower Housing Mtg.	
306	221805	Shield – Cylinder	1
307	93490	Screw – Cylinder Shield and Rotating Screen Mtg.	1
324	222063	Screw – Rotating	1
331	220865	Washer – Flywheel	1
332	92284	Nut – Flywheel	1
333	298502	Armature – Magneto	1
334	93381	Screw – Armature Mtg.	1
335	93435	Screw – Armature and Governor Blade Mtg.	1
337	293918	Plug – Spark (with Gasket)	1
340	26018	Spring – Breaker Arm	1
341	93381	Screw – Breaker Arm Mtg.	1
342	65704	Plunger – Breaker Point	1
344	93042	Screw – Condenser Clamp Mtg.	1
345	220366	Cover – Breaker Point and Condenser	1
346	93705	Screw – Dust Cover Mtg.	1
358	298989	Gasket Set	1
363	19069	Puller – Flywheel (Optional Accessory)	1
372	220477	Clamp – Condenser	1
375	294628	Breaker Points and Condenser Set **Note: 299061** Ignition Kit Includes: **294628** Point Set, **65704** Plunger, **61760** Key – Flywheel	1
377	93065	Key – Woodruff No. 6	1
441	222530	Bracket – Oil Fill Tube	1
508	93158	Screw	1
516	260374	Spring – Connector (Condenser Post)	1
523	391838	Cap with Dipstick – Oil Filler	1
524	68838	Seal – Filler Tube	1
525	280131	Tube – Oil Filler	1
527	222548	Clamp – Oil Filler Tube	1
625	298775	Tube – Fuel Intake	1
645	23513	Bushing – Plunger	1
655	222057	Anchor – Spring	1
676	222522	Deflector – Muffler	1
677	93705	Screw – Muffler Deflector	1
764	299946	Starter Assy. – Vertical Pull	1
765	299947	Housing – Vertical Pull Starter	1
766	280022	Pulley – Rope (small)	1
767	231048	Pin – Small Rope Pulley (7/16" long)	1
768	299948	Pulley and Gear Assy.	1
769	66734	Rope – Vertical Pull Starter	1
771	299961	Clip – Vertical Pull Starter	1
774	280121	Insert – Starter Handle	1
775	280036	Grip – Starter Rope	1
776	222049	Guide – Rope	1
777	390066	Spring – Vertical Pull Starter	1
778	280021	Cover – Vertical Pull Starter Cover	1
842	270920	Seal – Oil Filler Cap	1
847	392055	Tube Assy. – Oil Fill (Used on Type -02 only)	1
851	221798	Terminal – Ignition Cable	1
869	210879	Seat – Intake Valve (Standard)	1
870	211291	Seat – Exhaust Valve (Standard)	1
871	63709	Guide – Exhaust Valve	1

*Included in Gasket Set – Part No. 298989.

ENGINE BRIGGS & STRATTON MODEL 92908-2053-01
ENGINE BRIGGS & STRATTON MODEL 93508-0195-01
FOR 21" HAND PROPELLED MODEL 16310

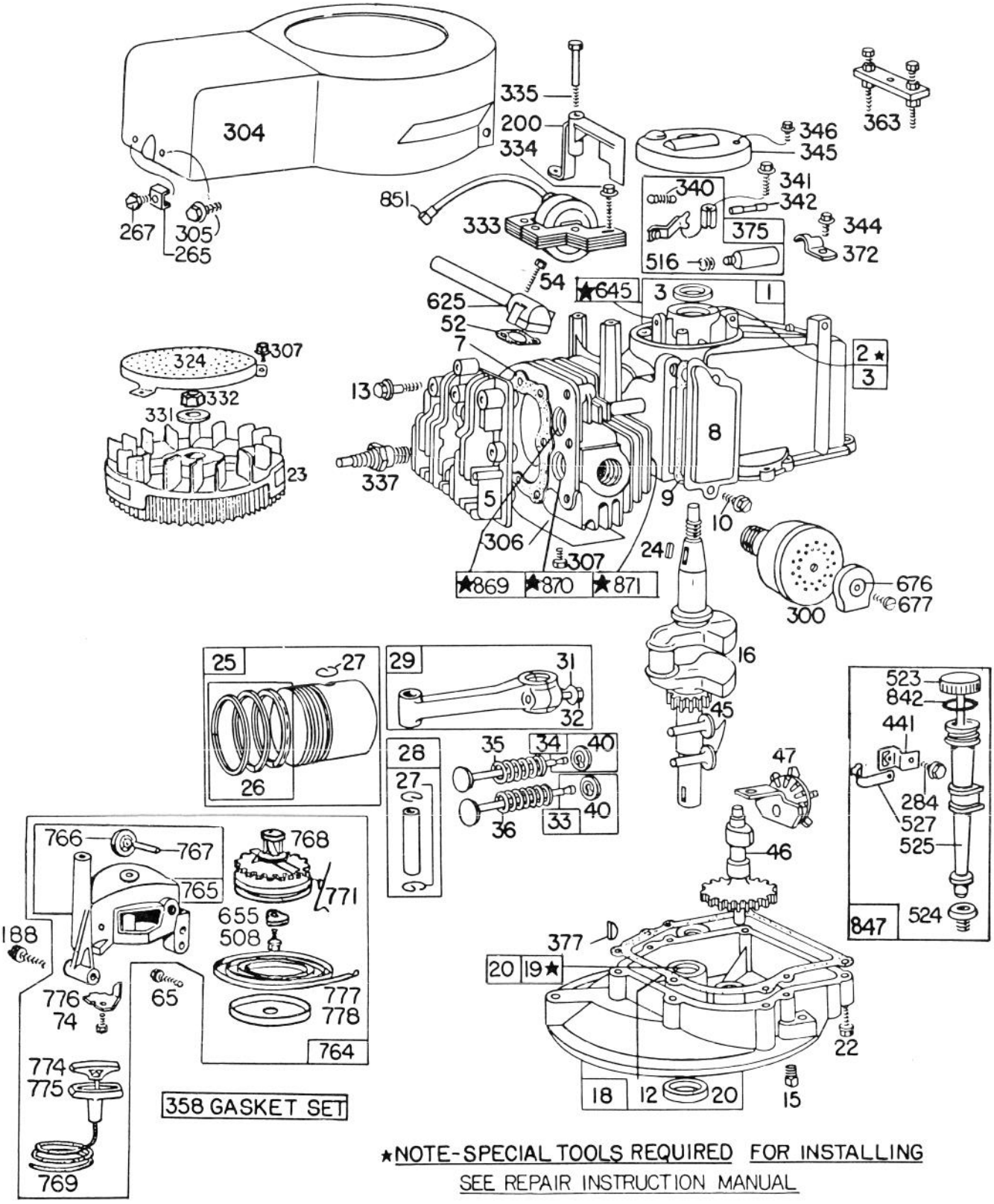

★NOTE-SPECIAL TOOLS REQUIRED FOR INSTALLING
SEE REPAIR INSTRUCTION MANUAL

ENGINE BRIGGS & STRATTON MODEL 92908-2053-01
ENGINE BRIGGS & STRATTON MODEL 93508-0195-01
FOR 21" HAND PROPELLED MODEL 16310

Ref. No.	Part No.	Description	No. Used
1	298988	Cylinder Assembly	1
2	293708	Bushing – Cylinder **Note:** Requires special tools for installation.	1
3	299819	Seal – Oil	1
5	211479	Head – Cylinder	1
7	*270341	Gasket – Cylinder Head	1
8	298383	Breather – Valve Chamber	1
9	*270239	Gasket – Valve Cover	1
10	93394	Screw – Breather	1
12	*270833	Gasket – Crankcase – .015" thick (Standard)	1
	*270895	Gasket – Crankcase – .005" thick	1
	*270896	Gasket – Crankcase – .009" thick	1
13	93111	Screw – Cylinder Head	
15	91084	Plug – Oil Drain (Square Head)	1
16	261293	Crankshaft	1
18	390810	Sump – Oil	1
19	293709	Bushing – Oil Sump **Note:** Requires special tools for installation.	1
20	291841	Seal – Oil	1
22	93032	Screw – Sump Mtg.	1
23	299982	Flywheel – Magneto	1
24	61760	Key – Flywheel	1
25	298904	Piston Assy. – Standard	1
	298905	Piston Assy. – .010" O.S.	1
	298906	Piston Assy. – .020" O.S.	1
	298907	Piston Assy. – .030" O.S. **PISTON RING SETS:** **Note:** For Chrome Piston Ring Set – standard size – order Part No. 299742	1
26	298982	Ring Set – Standard Piston	1
	298983	Ring Set – .010" O.S. Piston	1
	298984	Ring Set – .020" O.S. Piston	1
	298985	Ring Set – .030" O.S. Piston	1
27	26026	Lock – Piston Pin	1
28	298909	Pin Assy. – Piston – Standard	1
	298908	Pin Assy. – Piston – .005" O.S.	1
29	294201	Rod Assy. – Connecting **Note:** For Connecting Rod with .020" undersize Crankpin Bore – order No. 296079.	1
31	220756	Lock – Conn. Rod Screw	1
32	92296	Screw – Connecting Rod	1
33	296676	Valve – Exhaust	1
34	296677	Valve – Intake	1
35	260552	Spring – Intake Valve	1
36	26478	Spring – Exhaust Valve	1
40	93312	Retainer – Valve Spring used w/valves w/groove in stem	1
45	230173	Tappet – Valve	1
46	210453	Gear – Cam	1
47	294652	Oil Slinger Gear and Bracket	1
52	*270345	Gasket – Intake Elbow	1
54	93485	Screw – Intake Elbow Mtg.	1
65	93587	Screw – Vert. Pull Starter Mtg.	1
74	93490	Screw	1
188	93585	Screw – Fuel Tank and Starter Mtg.	1
200	68388	Blade – Governor	1
265	22372	Clamp – Casing	1
267	93469	Screw – Clamp Mtg.	1
284	93572	Screw – Clamp Mtg.	1

*Included in Gasket Set – Part No. 298989.

Ref. No.	Part No.	Description	No. Used
300	391435	Muffler – Exhaust	1
304	299983	Housing – Blower	1
305	93559	Screw – Blower Housing Mtg.	
306	221805	Shield – Cylinder	1
307	93490	Screw – Cylinder Shield and Rotating Screen Mtg.	1
324	222063	Screen – Rotating	1
331	220865	Washer – Flywheel	1
332	92284	Nut – Flywheel	1
333	298502	Armature – Magneto	1
334	93381	Screw – Armature Mtg.	1
335	93435	Screw – Armature and Governor Blade Mtg.	1
337	293918	Plug – Spark (with Gasket) (Resistor Type) 1-1/2" high **Note:** Spark Plugs use Ignition Cable Terminal No. 221798	1
340	26018	Spring – Breaker Arm	1
341	93381	Screw – Breaker Arm Mtg.	1
342	65704	Plunger – Breaker Point	1
344	93042	Screw – Condenser Clamp Mtg.	1
345	220366	Cover – Breaker Point and Condenser	1
346	93705	Screw – Dust Cover Mtg.	1
358	298989	Gasket Set	1
363	19069	Puller – Flywheel (Optional Accessory)	1
372	220477	Clamp – Condenser	1
375	294628	Breaker Points and Condenser Set **Note: 299061** Ignition Kit Includes: **294628** Point Set, **65704** Plunger, **61760** Key – Flywheel	1
377	93065	Key – Woodruff No. 6	1
441	222530	Bracket – Oil Fill Tube	1
508	93158	Screw	1
516	260374	Spring – Connector (Condenser Post)	1
523	391838	Cap with Dipstick – Oil Filler	1
524	68838	Seal – Filler Tube	1
525	280131	Tube – Oil Filler	1
527	222548	Clamp – Oil Filler Tube	1
625	298775	Tube – Fuel Intake	1
645	23513	Bushing – Plunger	1
655	222057	Anchor – Spring	1
676	222522	Deflector – Muffler	1
677	93705	Screw – Muffler Deflector	1
764	391486	Starter Assy. – Vertical Pull	1
765	299947	Housing – Vertical Pull Starter	1
766	280022	Pulley – Rope (small)	1
767	231048	Pin – Small Rope Pulley (7/16" long)	1
768	299948	Pulley and Gear Assy. – Starter	1
769	66734	Rope – Vertical Pull Starter	1
771	299961	Clip – Vertical Pull Starter	1
774	280121	Insert – Starter Handle	1
775	280036	Grip – Starter Rope	1
776	222049	Guide – Rope	1
777	390066	Spring – Vertical Pull Starter	1
778	280021	Cover –Vert. Pull Starter Pulley	1
842	270920	Seal – Oil Filler Cap	1
847	392055	Tube Assy. – Oil Fill	1
851	221798	Terminal – Ignition Cable	1
869	210879	Seat – Intake Valve (Standard)	1
870	210879	Seat – Exhaust Valve (Std.)	1
871	63709	Guide – Exhaust Valve	1

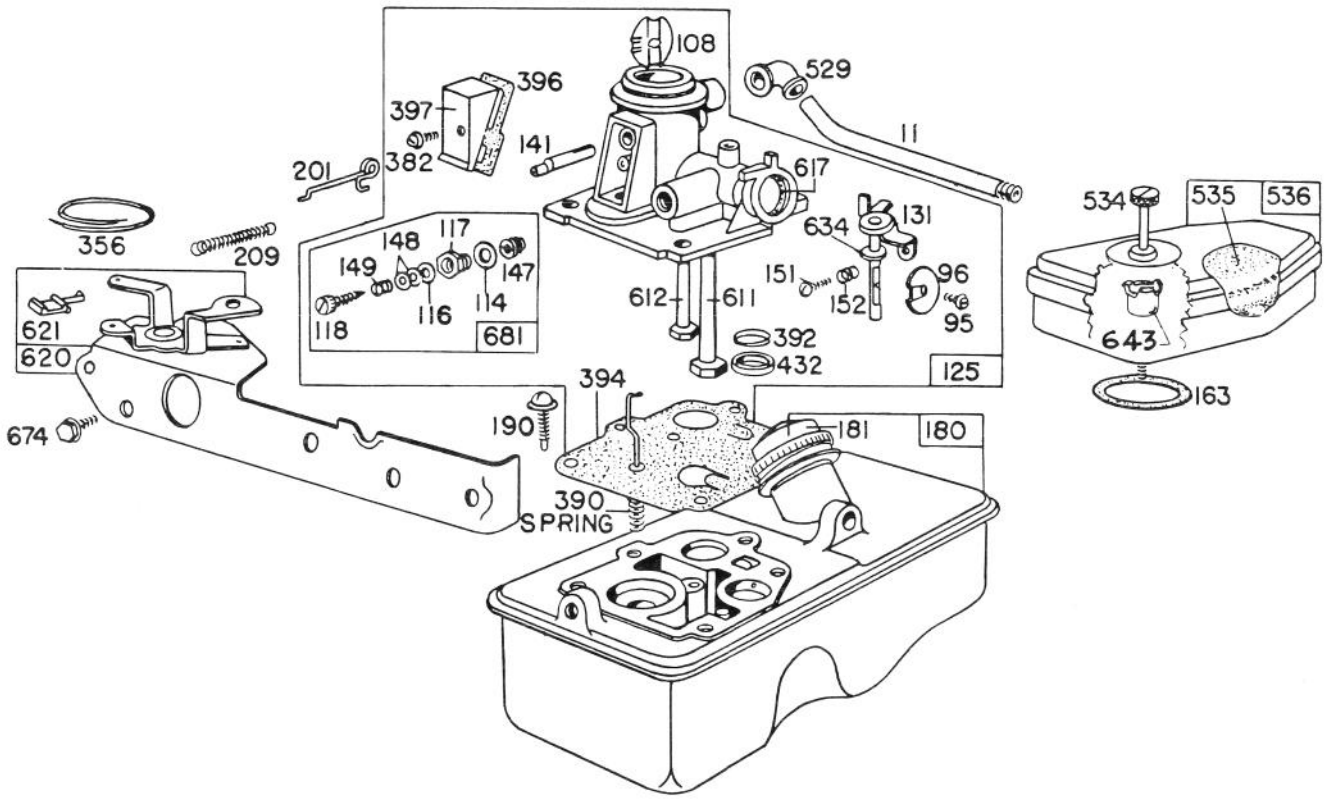

BRIGGS & STRATTON CARBURETOR ASSEMBLY MODEL 92908-2053-01 FOR 21" HAND PROPELLED MODEL 16310

Ref. No.	Part No.	Description	No. Used
11	230802	Tube – Breather	1
95	93499	Screw – Throttle Valve Mtg.	1
96	211237	Valve – Throttle	1
108	298819	Valve – Choke	1
114	66594	Gasket – Needle Valve Nut	1
116	65978	Packing – Needle Valve	1
117	230590	Nut – Needle Valve	1
118	23433	Valve – Needle	1
125	390065	Carburetor Assembly	1
131	299977	Shaft and Lever – Throttle	1
141	68908	Shaft – Choke	1
147	230591	Seat – Needle Valve	1
148	22235	Washer – Needle Valve	2
149	26336	Spring – Needle Valve	1
151	93524	Screw – Rd. Hd.	1
152	260746	Spring – Throttle Adj.	1
163	270816	Gasket – Air Cleaner Mtg.	1
180	391694	Tank Assy. – Fuel used on type Nos. 0500 and up	1
181	298425	Cap – Fuel Tank	1
190	93440	Screw – Fuel Tank Mtg.	1
201	261027	Link – Governor	1

Ref. No.	Part No.	Description	No. Used
209	261419	Spring – Governor	1
356	298479	Wire – Ground	1
382	93545	Screw – Choke Link Cover	1
390	261015	Spring – Diaphragm	1
392	260455	Spring – Fuel Pump Diaphragm	1
394	391681	Diaphragm – Carburetor	1
396	270571	Gasket – Choke Link Cover	1
397	211678	Cover – Choke Link	1
432	221377	Cap – Spring	1
529	67838	Grommet – Breather	1
534	93374	Screw – Air Cleaner	1
535	270579	Element – Air Cleaner	1
536	390055	Cleaner Assembly – Air	1
611	297219	Pipe – Fuel (long)	1
612	296811	Pipe – Fuel (short)	1
617	270344	Seal – Fuel Intake Tube	1
620	299974	Plate – Carburetor Control	1
621	297472	Switch – Stop	1
634	270167	Washer – Throttle Shaft (Felt)	1
643	221321	Cup – Air Cleaner	1
674	93447	Screw – Tank to Bracket	1
681	299060	Needle Valve Kit	1

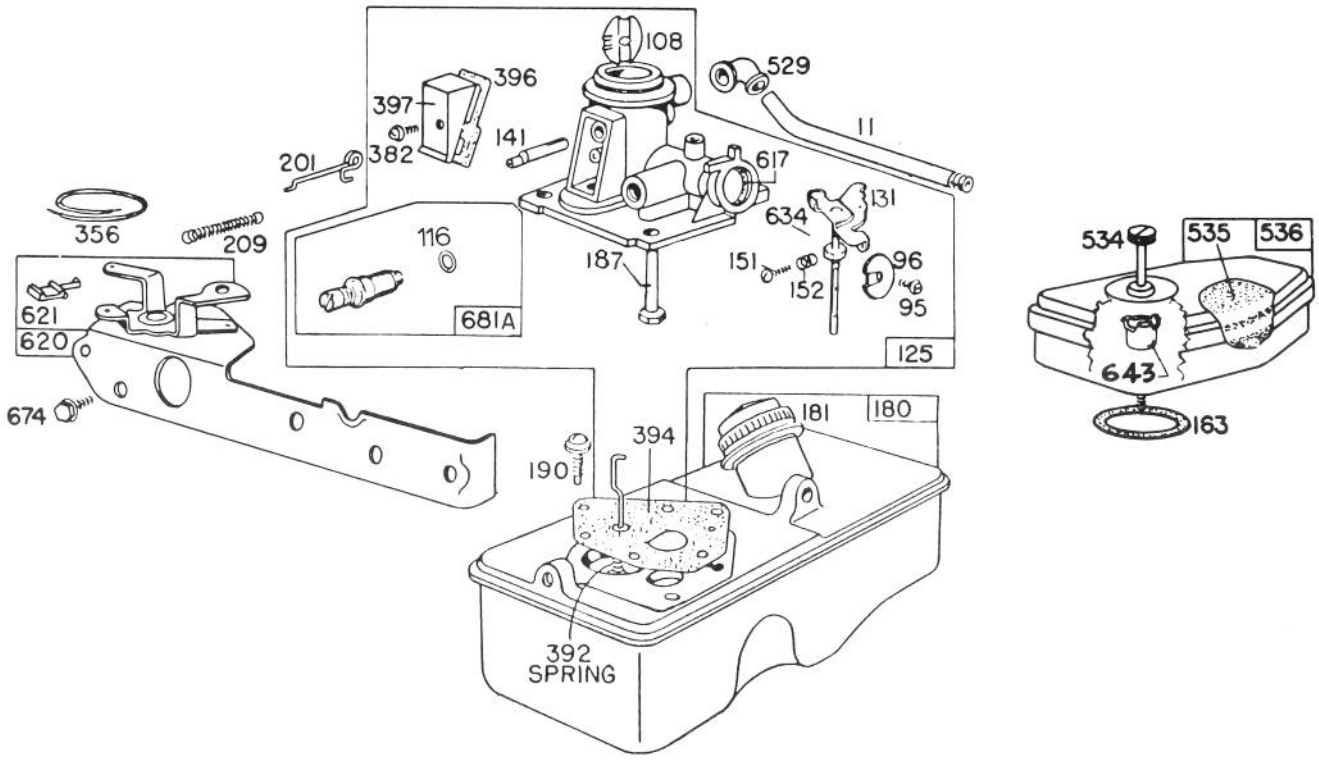

BRIGGS & STRATTON CARBURETOR ASSEMBLY MODEL 93508-0195-01 FOR 21" HAND PROPELLED MODEL 16310

Ref. No.	Part No.	Description	No. Used
11	230802	Tube – Breather	1
95	93499	Screw – Throttle Valve Mounting	1
96	211203	Valve – Throttle	1
108	280178	Valve – Choke	1
116	280203	Seal – O-Ring	1
125	394591	Carburetor Assembly	1
131	394588	Shaft and Lever Throttle	1
141	68908	Shaft – Choke	1
151	93524	Screw – Machine Rd. Hd.	1
152	260746	Spring – Throttle Adj.	1
163	270816	Gasket – Air Cleaner Mtg.	1
180	393113	Tank Assembly – Fuel	1
181	298425	Cap – Fuel Tank	1
187	393001	Pipe – Fuel	1
190	93440	Screw – Fuel Tank Mounting	1
201	260878	Link – Governor	1
209	260875	Spring – Governor For 3400 to 3600 RPM Top Speed Set-No Load	1

Ref. No.	Part No.	Description	No. Used
356	298479	Wire – Ground	1
382	93864	Screw – Choke Link Cover	1
392	261016	Spring – Diaphragm	1
394	299637	Diaphragm – Carburetor	1
396	270571	Gasket – Choke Link Cover	1
397	211678	Cover – Choke Link	1
529	67838	Grommet – Breather	1
534	93374	Screw – Air Cleaner	1
535	270579	Element – Air Cleaner	1
536	390055	Cleaner Assembly – Air	1
617	270344	Seal – Intake Tube	1
620	299974	Plate – Carburetor Control	1
621	297472	Switch – Stop	1
634	270167	Washer – Throttle Shaft (Felt)	1
643	221321	Cup – Air Cleaner	1
674	93158	Screw – Tank to Bracket	1
681A	393451	Needle Valve Kit	1

IDENTIFICATION AND ORDERING

MODEL AND SERIAL NUMBERS

The Mower has two identification numbers: a model number and a serial number. The two numbers are stamped on a decal which is located on the mower housing between the rear wheels. In any correspondence concerning the mower, supply model and serial numbers to assure that correct information and replacement parts are obtained.

To order replacement parts from an Authorized TORO Service Dealer, supply the following information:

1. Model and serial numbers of the mower.
2. Part number, description, and quantity of part(s) desired.

Note: Do not order by reference number if a parts catalog is being used; use the PART NUMBER.

The Toro Promise

A ONE YEAR LIMITED WARRANTY

The Toro Company promises to repair your TORO Product if defective in materials or workmanship. The following time periods from the date of purchase apply:

Residential Product . . . . . 1 Year
Residential Products Used Commercially . . . 45 Days

The costs of parts and labor are included, but the customer pays the transportation costs. Just return any residential product to an Authorized TORO Service Dealer or TORO Distributor.

Should you feel your TORO Product is defective and wish to rely on The Toro Promise, the following procedure is recommended:

1. Contact any Authorized TORO Service Dealer, TORO Master Service Dealer, or TORO Distributor (the Yellow Pages of your telephone directory is a good reference source).
2. He will either instruct you to return the product to him or recommend another Authorized TORO Service outlet which might be more convenient.
3. Bring the product along with your original sales slip, or other evidence of purchase date, to the service dealer.
4. The servicing dealer will inspect the unit, advise you whether the product is defective and, if so, make all repairs necessary to correct the defect without extra charge to you.

If for any reason you are dissatisfied with the dealer's analysis of the defect or the service performed, you may contact us.

Write:

TORO Consumer Service Department
8111 Lyndale Avenue South
Minneapolis, Minnesota 55420

The above remedy of product defects through repair by an Authorized TORO Service Dealer is the purchaser's sole remedy for any defect.

THERE IS NO OTHER EXPRESS WARRANTY. ALL IMPLIED WARRANTIES OF MERCHANTABILITY AND FITNESS FOR USE ARE LIMITED TO THE DURATION OF THE EXPRESS WARRANTY.

Some states do not allow limitations on how long an implied warranty lasts, so the above limitation may not apply to you.

This warranty applies only to parts or components which are defective and does not cover repairs necessary due to normal wear, misuse, accidents, or lack of proper maintenance. Regular, routine maintenance of the unit to keep it in proper operating condition is the responsibility of the owner.

All warranty repairs reimbursable under The Toro Promise must be performed by an Authorized TORO Service Dealer using Toro approved replacement parts.

Repairs or attemped repairs by anyone other than an Authorized TORO Service Account are not reimbursable under The Toro Promise. In addition, these unauthorized repair attempts may result in additional malfunctions, the correction of which is not covered by warranty.

THE TORO COMPANY IS NOT LIABLE FOR INDIRECT, INCIDENTAL OR CONSEQUENTIAL DAMAGES IN CONNECTION WITH THE USE OF THE PRODUCT INCLUDING ANY COST OR EXPENSE OF PROVIDING SUBSTITUTE EQUIPMENT OR SERVICE DURING PERIODS OF MALFUNCTION OR NON-USE.

Some states do not allow the exclusion or limitation of incidental or consequential damages, so the above limitation or exclusion may not apply to you.

This warranty gives you specific legal rights, and you may also have other rights which vary from state to state.

COUNTRIES OTHER THAN THE UNITED STATES OR CANADA

Customers who have purchased TORO products exported from the United States or Canada should contact their TORO Distributor (Dealer) to obtain guarantee policies for your country, province or state. If for any reason you are dissatisfied with your Distributor's service or have difficulty obtaining guarantee information, contact the TORO importer. If all other remedies fail, you may contact us at The Toro Company.

Compliance with Radio Interference Regulations Certified.
Certifié Conforme au Reglement sur le Brouillage Radioelectrique.

MAINTENANCE RECORD

Date	Hours Used	Oil Change	Air Cleaner Service	Lubrication	Winter Storage	Spring Service	Spark Plug Gap

MAINTENANCE RECORD

Date	Hours Used	Oil Change	Air Cleaner Service	Lubrication	Winter Storage	Spring Service	Spark Plug Gap

Litho in U.S.A.