FORM NO. 3311-420

TORO®

MODEL NO. 30570-00001 & UP
MODEL NO. 30571-00001 & UP

INSTALLATION INSTRUCTIONS

48" SNOWTHROWER WITH ADAPTER KIT

(GROUNDSMASTER 72®)

Since this instruction sheet covers only a minimal amount of information necessary to maintain and operate your snowthrower, we suggest that you keep this material with your Operator's Manual for the traction unit so that both may be referred to for instructions concerning safe operation and proper maintenance procedures.

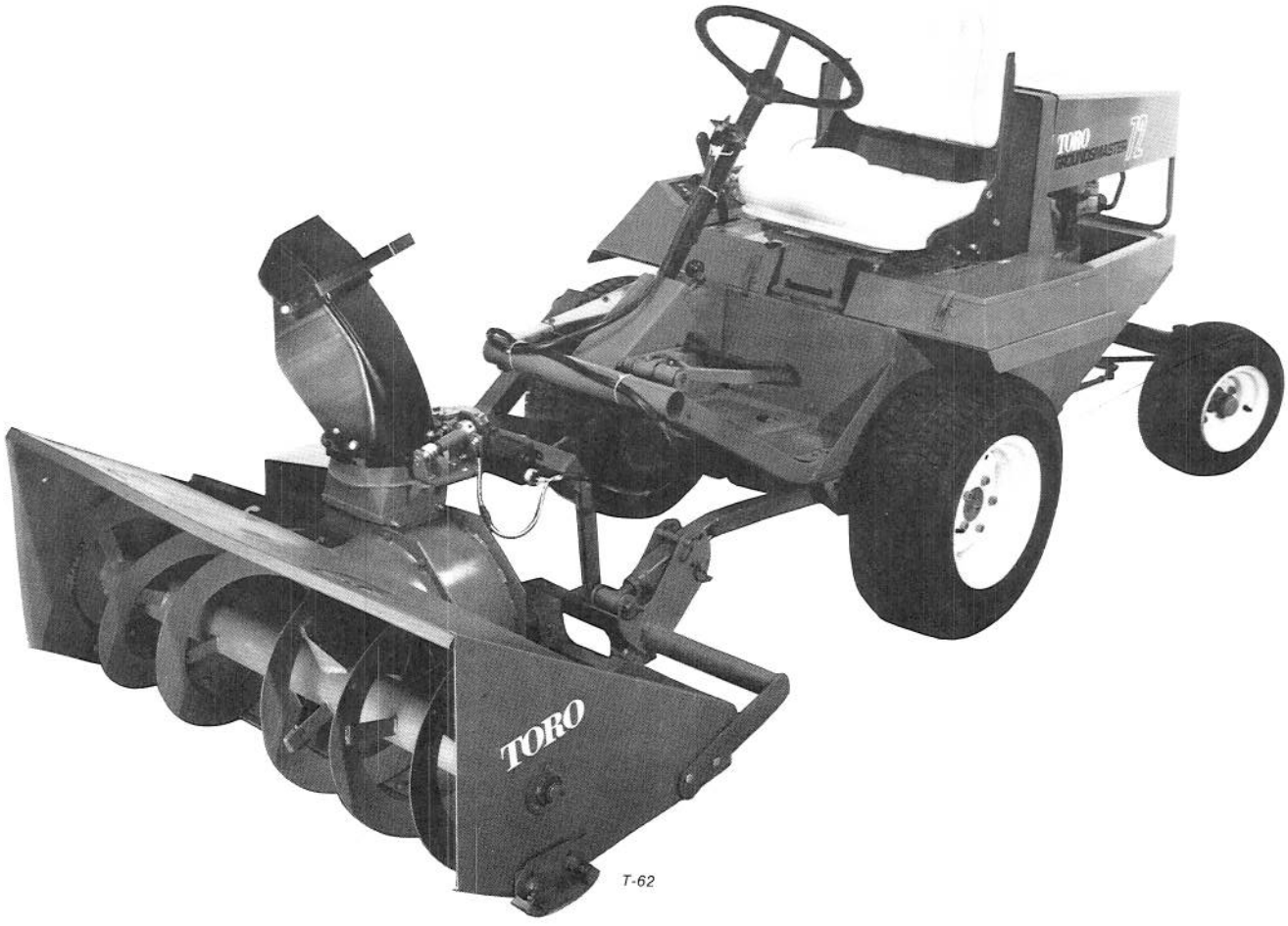

T-62

COPYRIGHT © ALL RIGHTS RESERVED
The Toro Company — 1979
MINNEAPOLIS, MN 55420 — U.S.A.

PRICE $1.00

SAFETY INSTRUCTIONS



This safety alert symbol means CAUTION, WARNING or DANGER – "personal safety instruction". Read and understand the instruction because it has to do with safety. Failure to comply with the instruction may result in personal injury.

The following instructions are comparable to the Instructions for Safe Snowthrowing adopted by ANSI – American National Standards Institute B71.3 - 1975.

The 48" Snowthrower is designed and tested to offer reasonably safe service. Failure to operate the machine in accordance with these Safety Instructions MAY RESULT IN PERSONAL INJURY.

BEFORE OPERATING

1. Read and understand the contents of these Installation Instructions and the Operator's Manual and the Operator's and Service Manual for the Groundsmaster 72 before starting and operating the machine. Become familiar with all controls and know how to stop quickly. A replacement manual is available by sending complete Model and Serial Number to:

The Toro Company
8111 Lyndale Avenue South
Minneapolis, Minnesota 55420

2. Four rear weights must be installed onto the traction unit as forward stability and steering control will be seriously degraded when the snowthrower is in the raised position during operation. Order two Part No. 24-5780 Rear Weight Kits from your local Toro Distributor.

3. Never allow children or adults unfamiliar with its operation to operate the machine, and keep everyone, especially children and pets, away from the area of operation.

4. Keep all shields and safety devices in place. If a shield, safety device or decal is defective or damaged, repair or replace it before operation is commenced. Also tighten any loose nuts, bolts and screws to assure machine is in safe operating condition.

5. Do not wear loose fitting clothing which could get caught in moving parts. Wearing safety glasses, safety shoes and a helmet is advisable and required by some local ordinances and insurance regulations.

6. Assure interlock switches are adjusted correctly so engine cannot be started unless traction pedal is released – neutral position – and PTO lever is in DISENGAGE position.

7. Fill fuel tank with gasoline before starting the engine. Avoid spilling any gasoline. Since gasoline is highly flammable, handle it carefully – DO NOT SMOKE.

A. Use an approved gasoline container.

B. Fill fuel tank outdoors and only when engine is not running. Engine must be cool to prevent a potential fire hazard.

C. Wipe up any gasoline that spilled, and install gasoline container cap and machine fuel tank cap securely before starting the engine.

WHILE OPERATING

8. Do not operate without first installing four rear weights from Part No. 24-5780 Rear Weight Kits. Forward stability and steering control will be seriously degraded without the weights installed.

9. Do not run the engine in a confined area without adequate ventilation. Exhaust fumes are hazardous and could possibly be deadly.

10. Maximum seating capacity is one person. Never carry passengers.

11. Sit on the seat when starting the engine and operating the machine.

12. When starting the engine:

A. Engage parking brake.

B. Assure traction pedal is in neutral and PTO is in disengage position.

C. After engine is started, release parking brake and keep foot off traction pedal. Machine must not move. If movement is evident, the neutral return mechanism is adjusted incorrectly; therefore, shut engine off and adjust until machine does not move when traction pedal is in neutral position.

13. Using the machine demands attention, and to prevent loss of control:

A. Operate only in daylight or when there is good artificial light.

B. Watch for holes or other hidden hazards.

SAFETY INSTRUCTIONS

C. Do not drive close to a ditch, creek or other hazard.

D. Reduce speed when making sharp turns and when turning on hillsides.

E. Avoid sudden stops and starts.

F. Before backing up, look to the rear and assure no one is behind the machine.

G. Watch out for traffic when near or crossing roads. Always yield the right-of-way.

14. Never direct discharge of snow or operate snowthrower near bystanders, glass enclosures, automobiles and trucks, window wells or a drop-off without proper adjustment of the snow discharge angle.

15. If the snowthrower strikes a solid object or the machine vibrates abnormally, disengage PTO, move throttle to slow, set parking brake and shut engine off. Remove key from ignition switch and pull high tension wire off spark plugs to prevent possibility of accidental starting. Check snowthrower and traction unit for damage and defective parts. Make all repairs before restarting the engine and operating the unit.

16. Clear snow from slopes by going up and down; never across the face, and use caution when changing directions. Never clear snow from steep slopes.

17. Do not touch engine, muffler or its adjacent shroud while engine is running or soon after it is stopped. These areas could be hot enough to cause a burn.

18. Before getting off the seat:

A. Move traction pedal to neutral position and remove foot from pedal.

B. Set the parking brake and disengage the PTO.

C. Shut the engine off and remove key from ignition switch. Wait for all movement to stop before getting off the seat.

19. Lower the snowthrower to the ground and remove key from ignition switch whenever machine is left unattended.

MAINTENANCE

20. Remove key from ignition switch and pull high tension wire off spark plugs to prevent accidental starting of the engine when servicing, adjusting or storing the machine.

1. KEEP ALL SHIELDS IN PLACE.
2. BEFORE LEAVING OPERATOR'S POSITION:
   A. MOVE TRANSMISSION CONTROL TO NEUTRAL AND LOWER SNOWTHROWER.
   B. SET PARKING BRAKE.
   C. DISENGAGE ATTACHMENT CLUTCH.
   D. SHUT OFF ENGINE.
   E. REMOVE IGNITION KEY.
3. WAIT FOR ALL MOVEMENT TO STOP BEFORE SERVICING MACHINE.
4. KEEP BYSTANDERS FROM AREAS BEING CLEARED.



SAFETY DECALS

ATTENTION ⚠ WARNING

- •GARDEZ LES MAINS HORS DE L'EJECTEUR ET DEMEUREZ A L'ECART DE LA TARIERE QUAND LE MOTEUR EST EN MARCHE
- •ARRETEZ LE MOTEUR AVANT TOUT DEBLOCAGE OU ENLEVEMENT DE DEBRIS
- •NE DIRIGEZ JAMAIS L'EJECTEUR VERS AUTRUI
- •KEEP HANDS OUT OF CHUTE AND KEEP CLEAR OF AUGER WHILE ENGINE IS RUNNING
- •STOP ENGINE BEFORE UNCLOGGING OR REMOVING DEBRIS
- •DO NOT DIRECT DISCHARGE AT BYSTANDERS

PART NO. 29-6350

⚠WARNING

WHEN OPERATED WITH SNOW BLOWER IN RAISED POSITION, FORWARD STABILITY AND STEERING CONTROL WILL BE SERIOUSLY DEGRADED.

1. GM 52 TRACTION UNIT MUST BE EQUIPPED WITH 5 REAR WEIGHTS PART NUMBER 24-5790 WITH SNOW BLOWER INSTALLED.

2. GMT TRACTION UNIT MUST BE EQUIPPED WITH 425 POUNDS (193 KG.) BALLAST IN REAR BOX OF TRACTOR.

GM 72 TRACTION UNIT MUST BE EQUIPPED WITH 4 REAR WEIGHTS PART NUMBER 24-5790 WITH SNOW BLOWER INSTALLED.

SEE SNOW BLOWER MANUAL FOR COMPLETE INSTRUCTIONS.

⚠ATTENTION

LORSQUE VOUS OPEREZ AVEC LA SOUFFLEUSE EN POSITION RELEVEE, LA STABILITE ET LA CONDUITE DE L'UNITE EN SERONT DIMINUEES.

1. L'UTILISATION DE LA SOUFFLEUSE A NEIGE REQUIERT 5 POIDS ARRIERE NO 24-5790 SUR L'UNITE DE TRACTEUR GM 52.

2. L'UNITE DE TRACTION GMT REQUIERT UN POIDS DE 193 KG (425 LBS) DANS LA BOITE ARRIERE LORSQU'UTILISEE AVEC LA SOUFFLEUSE A NEIGE.

L'UTILISATION DE LA SOUFFLEUSE A NEIGE REQUIERT 4 POIDS ARRIERE NO 24-5790 SUR L'UNITE DE TRACTEUR GM-72.

POUR PLUS DE DETAILS, CONSULTER LE MANUEL D'INSTRUCTION DE LA SOUFFLEUSE A NEIGE.

PART NO. 39-5020

TABLE OF CONTENTS

	Page
Safety Instructions	2-3
Set Up Instructions	4-9
Adapter Kit Parts Description & Location	4
Assemble Snowthrower	5
Install Chute and Wire Harness	5
Assemble Hitch Adapter and Lift Arm	5
Attach Hitch Adapter to Snowthrower	6
Discharge Chute Control Switch and Wire Harness Installation	8
Install Rear Weight Kits	8
Operation	9
Skid Shoes	9
Correct Snowthrower Attitude	9
Maintenance	10-11
Lubrication	10
Check Belt Tension	10
Check Drive Chain Tension	10
Scraper Blade	10
Slip Clutch Adjustment	10
The Toro Promise	13

SET UP INSTRUCTIONS

ADAPTER KIT PARTS DESCRIPTION AND LOCATION

DESCRIPTION	QTY.	WHERE USED
Push Arm Bracket	1	Install on right hand push arm.
Clamp Plate	1	Use with push arm bracket.
Capscrew, 3/8 x 3 in. lg.	4	Secures push arm bracket and clamp plate.
Flange Nut, 3/8 NC	4	Use with capscrews.
Push Pin	1	Thread into left hand push arm.
Jam Nut	1	Use with push pin.
Lift Arm	1	Replaces regular lift arm.
Cotter Pin, 1/4 x 2 in. lg.	1	Secures lift arm to machine.
Hitch Adapter	1	Install on snowthrower.
Pin, 3-3/16 in. lg. x 1 in. dia.	1	Secure hitch adapter to R.H. push arm.
Pin, 3-7/8 in. lg. x 1 in. dia.	1	Secure hitch adapter to L.H. push arm.
Pin, 3-7/8 in. lg. x 5/8 in. dia.	2	Insert into upper & lower holes — Hitch adapter.
Spring Pin	8	Install in hitch adapter pins.
Lift Strap	4	Install onto lift arm and hitch adapter.
Clevis Pin, 3/8 x 1-1/4 in. lg.	4	Secures lift straps (both ends).
Washer, 3/8 dia.	4	Install onto clevis pins.
Hair Pin	4	Install into clevis pins.
Jackshaft Support Ass'y.	1	Install onto hitch adapter.
Carriage bolt, 3/8 x 1 in. lg.	6	Use 2 to mount jackshaft support ass'y. 4 to secure hitch adapter to snowthrower.
Flange Nut, 3/8 NC	2	Use with carriage bolts on jackshaft support ass'y.
V Belt	1	Install on jackshaft support pulley.
Capscrew, 3/8 x 2-1/2 in. lg.	4	Secures hitch adapter to snowthrower frame.
Washer, 13/32 I.D., 1-1/4 O.D., 3/16 Thk.	4	Use with capscrews.
Flange Nut, 3/8 NC	4	Use with capscrews.
Roll Pin	1	Secure PTO to jackshaft.
Power Take Off Shield	1	Install over jackshaft support Ass'y.
Flange Screw, 3/8 x 3/4 in. lg.	1	Secures shield.
Flange Nut, 3/8 NC	1	Use with Flange Screw.
Flange Screw, 1/4 x 1/2 in. lg.	2	Secures shield.
Muffler Clamp	1	Install on steering column. Switch mount.
Reflector	2	Install on rear of engine hood.
Self-Tapping Screw	4	Secures reflectors.

SET UP INSTRUCTIONS

INSTALL CHUTE AND WIRE HARNESS

Note: Left and right hand sides are determined by standing at the rear of the unit.

1. Install chute to chute swivel ring and secure with three carriage bolts, flat washers and locknuts (Fig. 1). Install chute wire inside chute and secure to chute with two pushnuts.

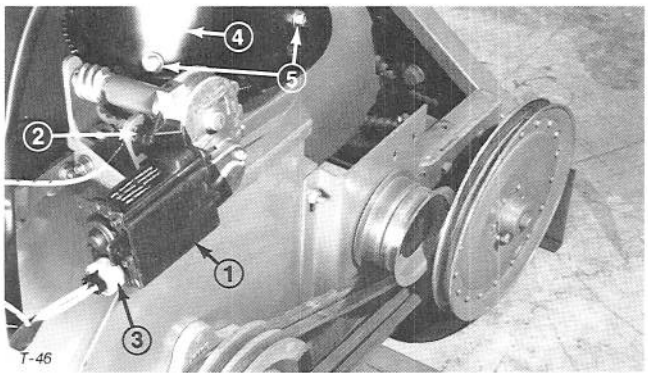

Figure 1

1. *Chute drive motor*
2. *Flange screw and wire*
3. *Wire harness and connectors*
4. *Chute assembly*
5. *Chute fasteners*

2. Remove top flange screw for chute drive motor, insert through eyelet of single wire of wire harness and re-install (Fig. 1).

3. Install female connectors of wire harness to spade terminals of motor (Fig. 1).

ASSEMBLE HITCH ADAPTER AND LIFT ARM

Install Push Arm Bracket and Push Pin

1. Assure a 2 X 4 inch block of wood is between the top of the left hand push arm and the frame of the traction unit and remove the ball joints from both push arms.

WARNING

Since left hand push arm is spring-loaded to about 150 pounds (68 kg), a helper is required to hold the arm while performing assembly procedures. Sudden release of the push arm could cause injury.

2. Position the push arm bracket under the right hand push arm, the clamp plate on top, install 3/8 X 3 inch capscrews through the plate and bracket and secure with flange nuts (Fig. 2). Position the front edges of the bracket and plate so they are aligned with the end of the square arm tubing (Fig. 2).

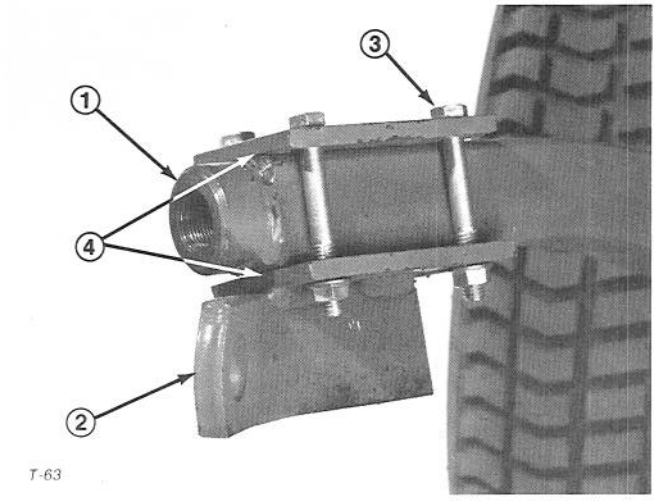

Figure 2

1. *Right hand push arm*
2. *Push arm bracket*
3. *Clamp plate*
4. *Align with end of square tubing*

3. Thread jam nut onto push pin and install push pin into left hand push arm (Fig. 3). Adjust push pin until there is two inches from the center hole of push pin to the front surface of push arm and lock jam nut to secure in place (Fig. 3).

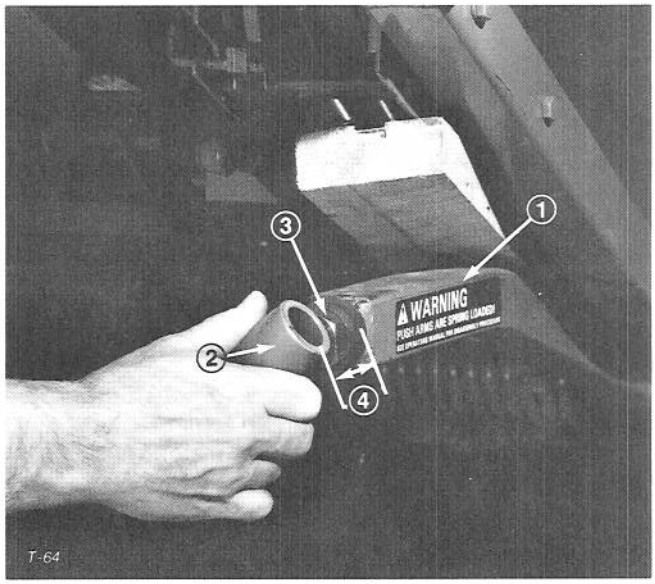

Figure 3

1. *Left hand push arm*
2. *Push pin*
3. *Jam nut*
4. *Adjust to two inches from end of arm*

4. Remove standard lift arm from traction unit and replace with new arm (Fig. 4). Use the original washers from the standard arm on the pivot pin and secure arm to frame with new cotter pin (Fig. 4). Use original pin and spring pin to mount lift cylinder (Fig. 4).

SET UP INSTRUCTIONS

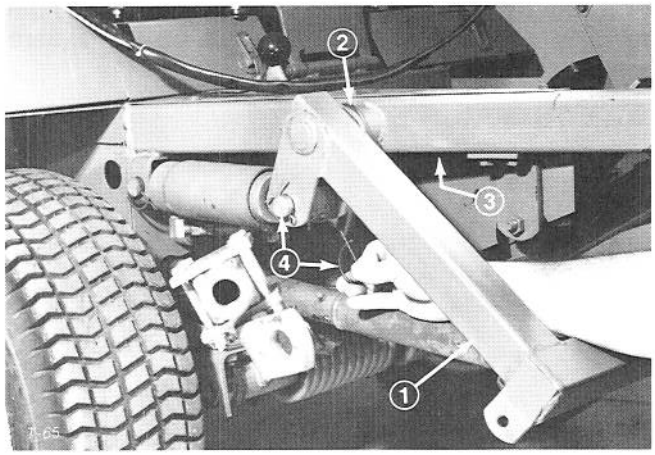

Figure 4

1. *Lift arm*
2. *Washer*
3. *Cotter pin and washer inside frame*
4. *Cylinder pin and spring pin*

5. Install lift straps onto lift arm on both sides. Secure with clevis pin and hair pin (Fig. 5).

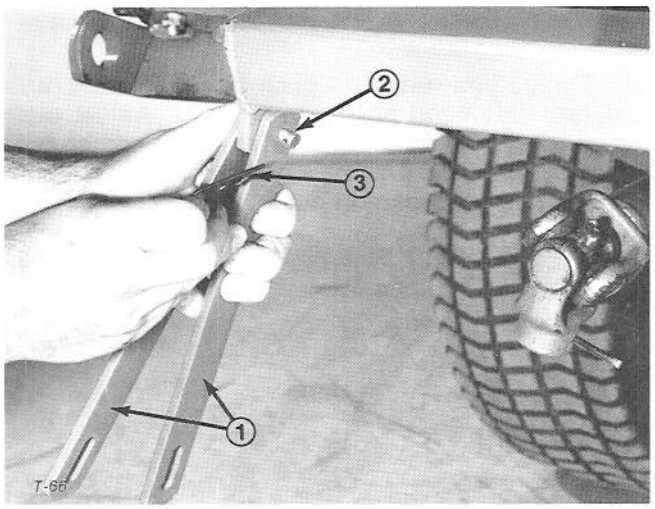

Figure 5

1. *Lift straps*
2. *Clevis pin*
3. *Hair pin*

6. Locate mounting brackets on right side of hitch adapter on each side of push arm bracket, align holes and install pin (Fig. 6). Secure pin with spring pins (Fig. 6).

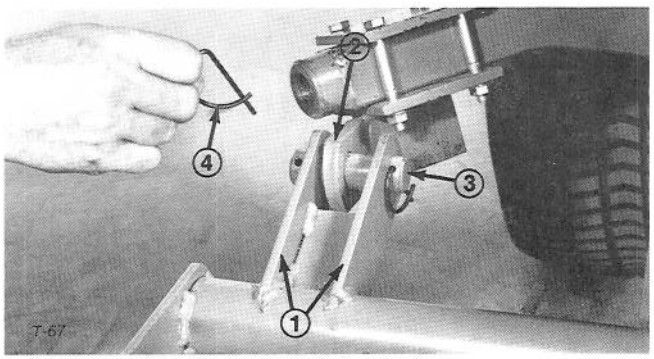

Figure 6

1. *Hitch adapter brackets*
2. *Push arm bracket*
3. *Pin*
4. *Spring pin*

7. Position brackets on left side of hitch adapter on each side of push arm and push pin, align holes and install pin through bracket and push pin (Fig. 7). Install pins through center holes of top and lower holes in brackets alongside push arm (Fig. 7). Secure all pins with spring pins (Fig. 7).

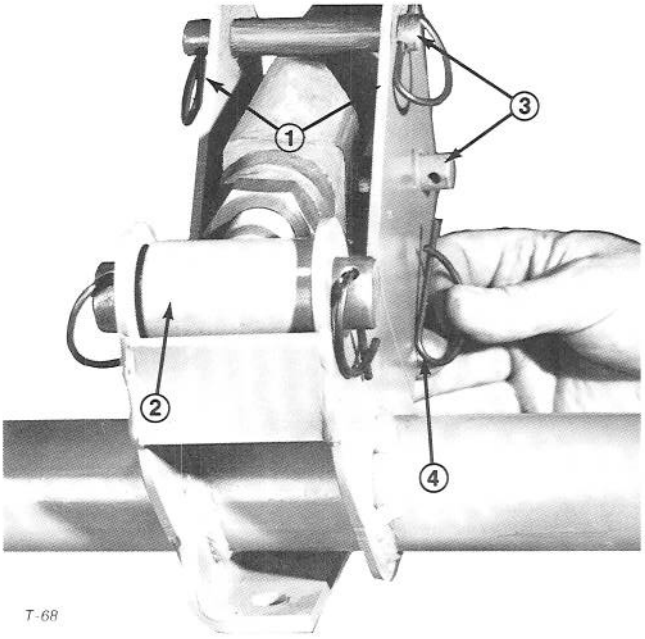

Figure 7

1. *Brackets*
2. *Push pin*
3. *Upper and lower bracket pins*
4. *Spring pin*

8. Secure lift straps to hitch adapter on both sides with clevis pin, washers and hair pin (Fig. 8).

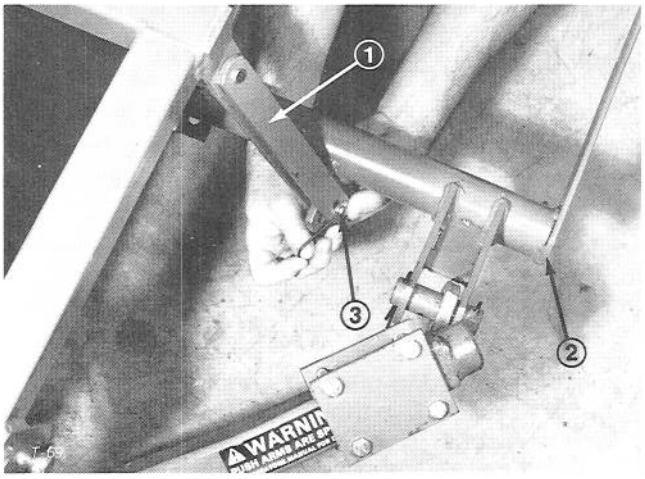

Figure 8

1. *Lift straps*
2. *Hitch adapter*
3. *Clevis pin, washers and hair pin*

ATTACH HITCH ADAPTER TO SNOWTHROWER

1. Remove carriage bolts and flange screws securing snowthrower cross brace to both sides of auger housing.

SET UP INSTRUCTIONS

2. Move traction unit into mounting position in front of snowthrower with both sides of hitch adapter on outside of auger housing (Fig. 9).

3. Align hitch adapter mount holes with holes in auger housing and cross brace, install 3/8 X 1 inch carriage bolts and secure with flange nuts (Fig. 9).

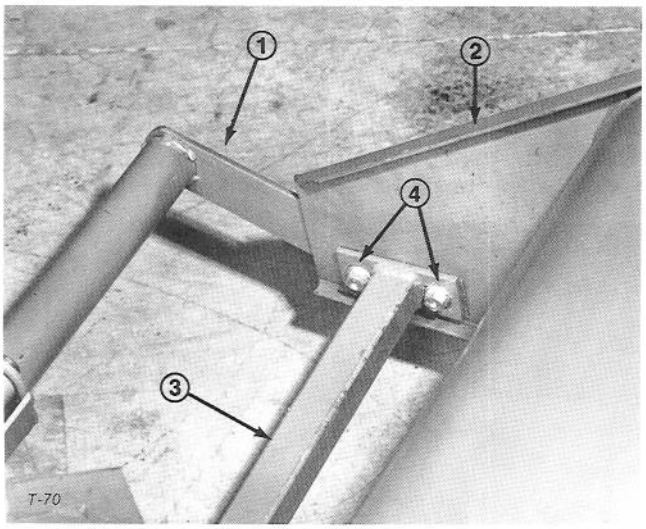

Figure 9

1. *Hitch adapter*
2. *Auger housing*
3. *Cross brace*
4. *Carriage bolts and flange nuts*

4. Align holes in snowthrower frame with adapter frame holes, insert 3/8 X 2-1/2 inch capscrews with 13/32 inch heavy flatwashers into snowthrower frame from bottom, through the hole in the adapter frame and secure the two with flange nuts (Fig. 10).

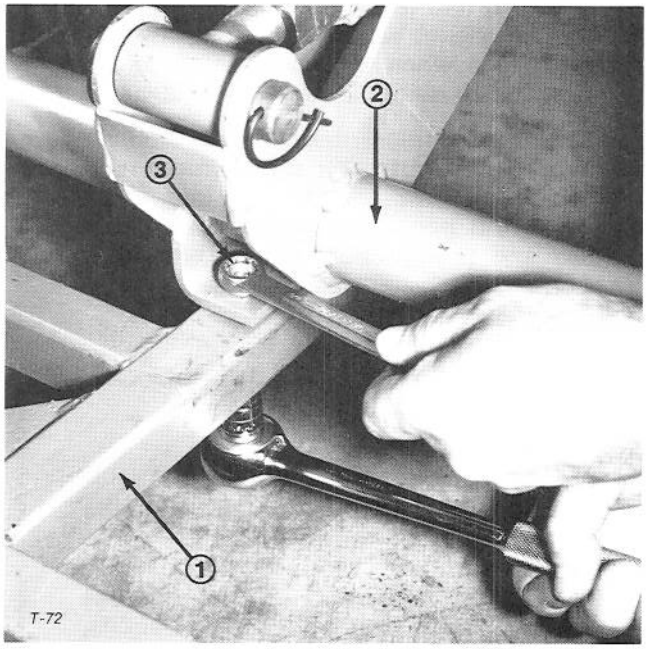

Figure 10

1. *Snowthrower frame*
2. *Adapter frame*
3. *Capscrew, heavy flatwasher and flange nut*

5. Align mounting screw holes with hitch adapter holes, install V belt and secure jackshaft support to hitch adapter with carriage bolts and flange nuts (Fig. 11). Assure belt pulleys are aligned and belt is tensioned so there is 1/8 inch deflection midway between the pulleys when 5-6 lb. force is applied to the belt (Fig. 11).

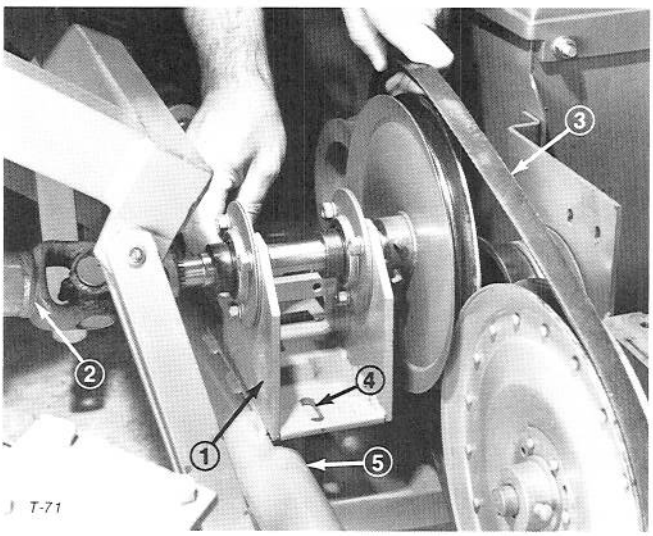

Figure 11

1. *Jackshaft support*
2. *PTO shaft*
3. *V belt*
4. *Jackshaft support mounting holes*
5. *Hitch adapter*

6. Slide PTO shaft onto jackshaft and install roll pin into PTO and jackshaft (Fig. 11).

7. Install the belt shield over the snowthrower belts and the power take off shield over the PTO drive belt (Fig. 12).

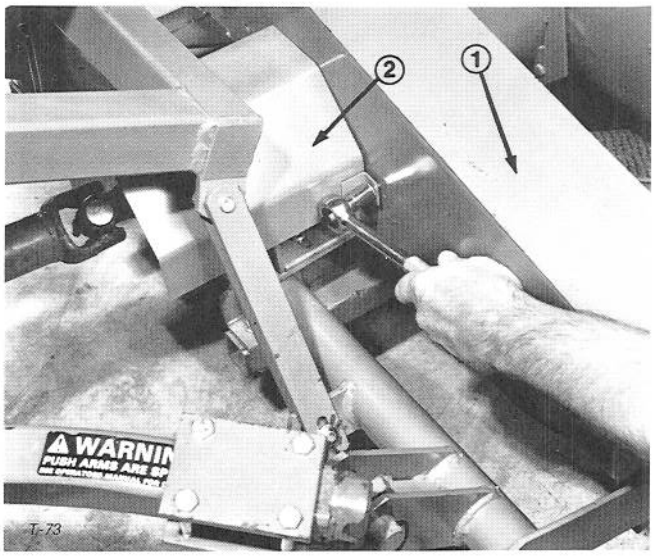

Figure 12

1. *Snowthrower belt shield*
2. *Power take off shield*

Note: Hitch adapter and jackshaft assembly may be assembled to snowthrower before attaching snowthrower to traction unit.

SET UP INSTRUCTIONS

DISCHARGE CHUTE CONTROL SWITCH AND WIRE HARNESS INSTALLATION

1. Assemble muffler clamp around steering column, mount switch plate onto clamp and install nut onto right side and eyelet end of striped harness wire and nut onto left side (Fig. 13).

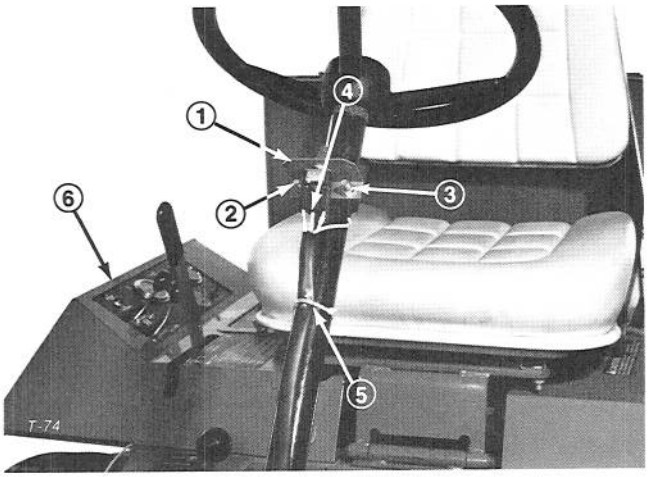

Figure 13

1. *Muffler clamp and switch assembly*
2. *Right hand nut*
3. *Left nut and striped wire*
4. *Red wire*
5. *Tie straps*
6. *Instrument cover*

2. Install female wire harness ends onto switch terminals (Fig. 13). Assure red wire is attached to the center terminal.

3. Secure harness to steering column with tie straps (Fig. 13). Loop any excess harness together and secure to frame with tie straps to assure harness stays clear of moving parts (Fig. 14).

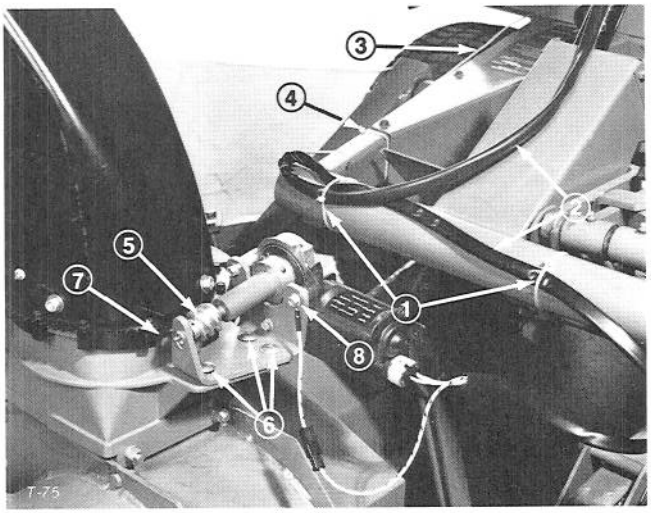

Figure 14

1. *Tie straps*
2. *Looped wire harness*
3. *Single strand harness wire*
4. *Tie strap to frame*
5. *Chute gear*
6. *Chute gear fasteners*
7. *Chute ring*
8. *Chute gear mount*

4. Lift instrument cover over battery and remove the negative battery cable from the battery (Fig. 13).

WARNING

Remove only the negative cable, not the positive cable so that sparks, which could ignite hydrogen gas from the battery, will be prevented. DO NOT SMOKE.

5. Route the remaining single strand harness wire along the right side of the frame, secure it to the frame with tie straps (Fig. 14) and connect end to positive (+) terminal of the ammeter (Fig. 15).

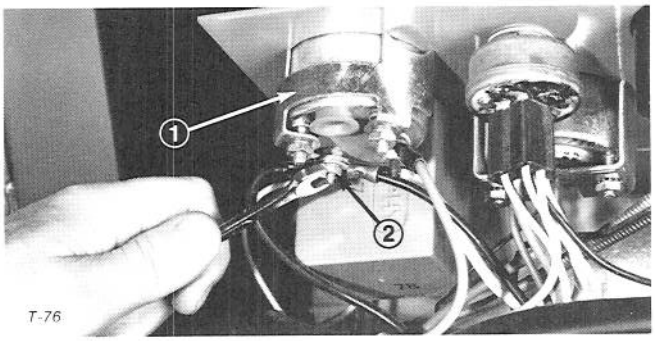

Figure 15

1. *Ammeter*
2. *Positive (+) terminal*

6. Connect negative cable to battery and install instrument cover.

7. Apply No. 2 General Purpose Lithium Base Grease to chute gear.

8. Actuate switch to check chute operation. Switch yellow and green wires on motor terminals if chute operates in wrong direction. Chute should rotate to right when switch is actuated to right and to left when switch is actuated to left.

9. Actuate switch and observe mesh of chute gear and chute ring. Chute gear should mesh with ring as close as possible without binding (Fig. 14). Adjust mesh, if necessary, by loosening chute gear fasteners and sliding chute gear mount in or out (Fig. 14).

INSTALL REAR WEIGHT KITS

WARNING

The GM-72, when operated with the snowthrower in the raised or transport position, will be seriously degraded in forward stability and steering control without the addition of 4 rear weights, Part No. 24-5780 Rear Weight Kit. Two kits must be ordered as there are only two weights in each kit.

OPERATION

SKID SHOES

The bottom surface of the skid shoes should be adjusted so they are slightly below the scraper blade (Fig. 16). This allows scraper blade to clear cracks, in concrete, paving, etc. and prevents excessive scraper blade wear (Fig. 16).

CAUTION

Always adjust skid shoes down to allow snowthrower to clear gravel or crushed rock surfaces.

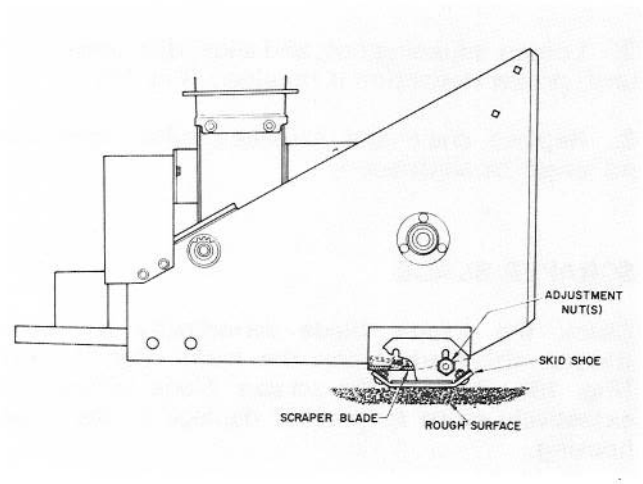

Figure 16

CORRECT SNOWTHROWER ATTITUDE

The pins installed in the center holes of the hitch adapter brackets on each side of the left lift arm will keep the snowthrower at the best attitude for most snow conditions (Fig. 17). However, should the snow be densely packed, causing the snowthrower to ride up and not clear properly, move the pins to the lower holes in the brackets. This will tip the front of the snowthrower down.

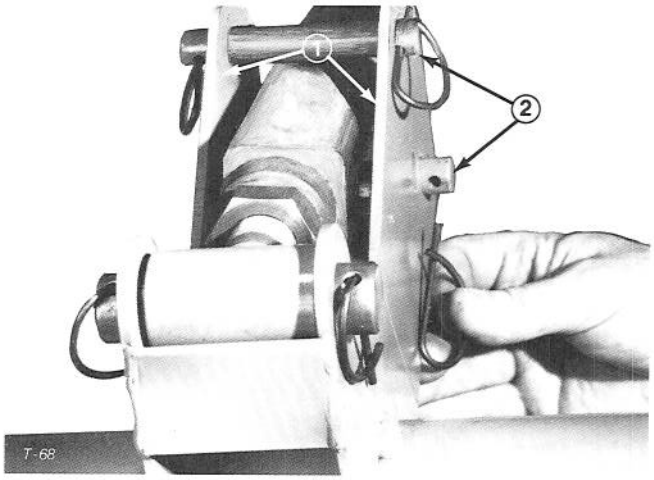

Figure 17

1. Hitch adapter brackets
2. Pins

If the surface beneath the snowthrower is soft, allowing the skids to lower and the scraper blade to dig in, move the pins to the highest holes in the brackets. This will tip the front of the snowthrower up.

IMPORTANT: Keep the lift lever in the FLOAT position during operation to allow the unit to follow surface contours thereby preventing possible damage to the snowthrower and traction unit.

CAUTION

Never raise implement while auger and impeller are rotating. The exposed, rotating auger is hazardous.

MAINTENANCE

LUBRICATION

1. Lubricate the auger drive chain with SAE 30 engine oil after each use (Fig. 18).

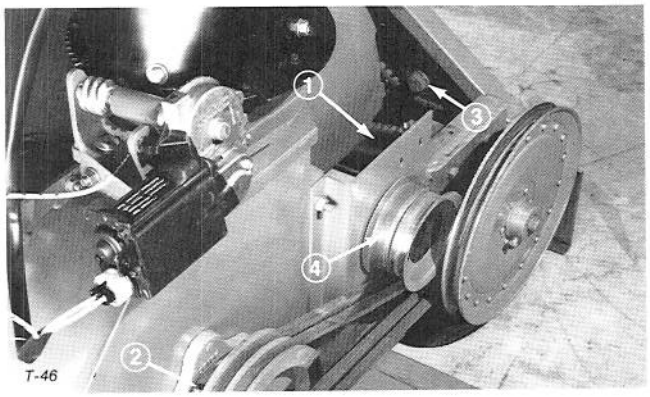

Figure 18

1. Auger drive chain
2. Grease fitting-impeller shaft bearing
3. Auger idler adjusting bolt
4. Impeller drive belt idler pulley

2. Grease the impeller shaft bearing every 40 hours with No. 2 general purpose Lithium base grease (Fig. 18).

CHECK BELT TENSION

A. Impeller Drive Belts

After initial 5 hours operation and every 40 hours thereafter, check belt tension.

1. Remove shield and check tension. Belts should have 1/4 inch deflection when 5-6 lb. force is applied to center of belts (Fig. 18). If tension is correct, continue operation. If tension is incorrect, proceed to item 2.

2. Loosen locknut securing idler pulley and push downward on idler to move it downward in the mounting slot (Fig. 18). Adjust to proper tension and tighten locknut.

3. If idler mounting bolt is bottomed out in the slotted hole in the frame, no further adjustment can be accomplished. Replace the belt.

B. PTO Drive Belt

Check belt tension after initial 5 hours operation and every 40 hours thereafter.

1. Remove shield and check tension. Belt should deflect 1/8 inch when 5-6 lb. force is applied to center. If tension is correct, continue operation. If tension is incorrect, proceed to item 2.

2. Loosen fasteners for jackshaft support, lever support over to tension belt and tighten fasteners.

3. Install shield.

CHECK DRIVE CHAIN TENSION

Check the tension of the auger drive chain after the initial 5 hours operation and every 40 hours thereafter.

1. Measure the deflection on the lower span of the chain (Fig. 18). If deflection is less than 1/4 inch midway between the sprockets, continue operation. If deflection is more than 1/4 inch, proceed to item 2.

2. Loosen adjusting bolt and slide idler downward until proper deflection is obtained (Fig. 18).

3. Replace chain and sprockets when idler can no longer be adjusted.

SCRAPER BLADE

Check the scraper blade periodically for wear. Reverse the blade when the front edge is worn (Fig. 19). Replace the scraper blade before it is excessively worn to prevent damage to the auger housing.

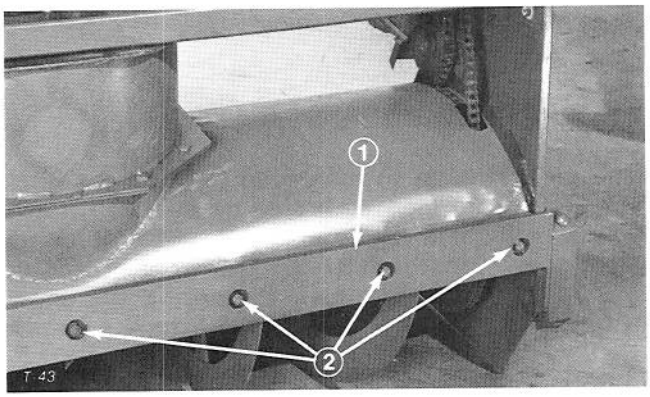

Figure 19

1. Scraper blade
2. Scraper blade fasteners

SLIP CLUTCH ADJUSTMENT

A slip clutch is provided to guard against excessive damage should an obstruction be caught between the auger and the housing. Should the auger slip excessively during operation, adjust as follows:

1. Remove the outer jam nut (Fig. 20).

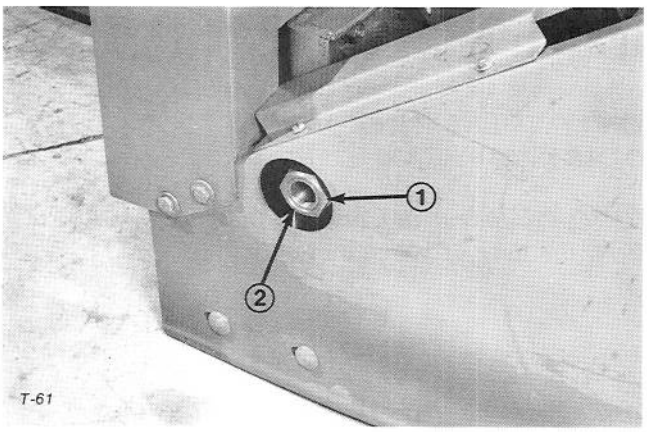

Figure 20

1. *Slip clutch adjustment nuts*
2. *Nut flush with sleeve (initial adjustment)*

2. Tighten the inner jam nut 1/4 turn, and re-install the outer jam nut.

3. Operate the snowthrower to assure the auger operates without slippage. If the auger operates correctly, continue operation. If it operates incorrectly, repeat items 1 and 2 until the slippage is corrected.

Note: At start of each season, disassemble slip clutch and generously lubricate I.D. of sprocket and jaws of slip clutch with Moly EP grease. Reassemble slip clutch and tighten until outside jam nut is flush with sleeve (Fig. 20). Operate unit to check performance. If slip clutch slips excessively, tighten nuts 1/4 turn at a time until unit performs satisfactorily. Do not overtighten jam nut as the auger may not slip if an obstruction is hit.

The Toro Promise

A ONE YEAR LIMITED WARRANTY ON COMMERCIAL PRODUCTS OTHER THAN WALK ROTARY MOWERS

The Toro Company promises to repair any TORO Product if defective in materials or workmanship. The following time periods from the date of purchase apply:

Commercial Products	1 Year
Hevi-Duty Walk Rotary Mowers	90 Days

The costs of parts and labor are included, but the customer pays the transportation costs on walk rotary mowers.

Should you feel your TORO is defective and wish to rely on The Toro Promise, the following procedure is recommended:

1. Contact your Authorized TORO Distributor (the Yellow Pages of your telephone directory is a good reference source).
2. The TORO Distributor will advise you on the arrangements that can be made to inspect and repair your product.
3. The TORO Distributor will inspect the product and advise you whether the product is defective and, if so, make all repairs necessary to correct the defect without an extra charge to you.

If for any reason you are dissatisfied with the distributor's analysis of the defect or the service performed, you may contact us.

Write:

TORO Commercial Products Service Department
8111 Lyndale Avenue South
Minneapolis, Minnesota 55420

The above remedy of product defects through repair by an Authorized TORO Distributor is the purchaser's sole remedy for any defect.

THERE IS NO OTHER EXPRESS WARRANTY. ALL IMPLIED WARRANTIES OF MERCHANTABILITY AND FITNESS FOR USE ARE LIMITED TO THE DURATION OF THE EXPRESS WARRANTY.

Some states do not allow limitation on how long implied warranty lasts, so the above limitation may not apply to you.

This Warranty applies only to parts or components which are defective and does not cover repairs necessary due to normal wear, misuse, accidents, or lack of proper maintenance. Regular, routine maintenance of the unit to keep it in proper condition is the responsibility of the owner.

All warranty repairs reimbursable under The Toro Promise must be performed by an Authorized TORO Distributor using Toro approved replacement parts.

Repairs or attempted repairs by anyone other than an Authorized TORO Distributor are not reimbursable under the Toro Promise. In addition, these unauthorized repair attempts may result in additional malfunctions, the correction of which is not covered by warranty.

THE TORO COMPANY IS NOT LIABLE FOR INDIRECT, INCIDENTAL OR CONSEQUENTIAL DAMAGES IN CONNECTION WITH THE USE OF THE PRODUCT INCLUDING ANY COST OR EXPENSE OF PROVIDING SUBSTITUTE EQUIPMENT OR SERVICE DURING PERIODS OF MALFUNCTION OR NON-USE.

Some states do not allow the exclusion of incidental or consequential damages, so the above exclusion may not apply to you.

This warranty gives you specific legal rights, and you may also have other rights which vary from state to state.

COUNTRIES OTHER THAN THE UNITED STATES OR CANADA

Customers who have purchased TORO products exported from the United States or Canada should contact their TORO Distributor (Dealer) to obtain guarantee policies for your country, province or state. If for any reason you are dissatisfied with your Distributor's service or have difficulty obtaining guarantee information, contact the TORO importer. If all other remedies fail, you may contact us at The Toro Company.

International Group
Service Department
One Corporate Center
7401 Metro Boulevard
Minneapolis, Minnesota 55435 U.S.A.

Compliance with Radio Interference Regulations Certified.
Certifie Conforme au Reglement sur le Brouillage Radioelectrique.

Litho in U.S.A.