TORO®

MODEL NO. 37025-10001 THRU 20001 & UP

OWNER'S MANUAL

GENERAL TRACTOR



PRICE $1.00

TABLE OF CONTENTS

Description	4
Specifications	4
Operation	6, 7
Maintenance	
Air Cleaner	7, 8
Grease Fittings	8
Fuel Filters	9
Battery	9
Fan Belt Tension	9
Universal Joints	9
Brake Adustment	9
Hand Brake Adjustment	10
Clutch Pedal Free-Travel Adjustment	10, 11
Minimum Turning Radius Adjustment	11
Tractor Storage	11
Engine Tune-Up	11
Service Interval Chart	12
Lubrication Chart	13
Trouble Shooting Chart	13
Optional Equipment	14, 15

THE TORO PROMISE

It is Toro's policy to design and produce Toro products to provide our customers with a high level of performance and durability in normal operation. Our products, however, are produced in high volume, and it is inevitable that occasionally a unit will reach a customer with a defect in materials or workmanship which causes that unit to fall below the normal high level of Toro performance. Invariably, such a defect will be noticed in a residential product within one year, and in an institutional product within ninety days after purchase.

Recognizing this possibility, Toro has established a simple guarantee policy and procedure that is intended to assure customer satisfaction. This guarantee statement is as follows:

The Toro Promise

The Toro Company promises to repair any TORO product for the original purchaser if defective in materials or workmanship. The following time periods from the date of purchase apply:

Residential products	1 year
Residential products used commercially	45 days
Institutional products	90 days

The costs of parts and labor are included, but the customer pays the transportation costs. Just return any residential product to a TORO Service Dealer, or any institutional product to a TORO distributor.

Should you feel that a product is defective, and wish to rely on The Toro Promise, the following procedure is recommended:

1. Contact any TORO dealer or distributor, but preferably the dealer or distributor from whom you purchased the product.
2. He will instruct you to either return the product to him, or tell you the name and address of your nearest TORO Service Dealer if the product is to be returned to such dealer.
3. Take the product and your original sales slip, or other evidence of purchase date, to the servicing dealer.
4. The servicing dealer will inspect the unit, advise you whether the product is defective and, if so, make all repairs necessary to correct the defect without extra charge to you.

If for any reason you are dissatisfied with the dealer's analysis of the defect or the service he performs, we urge you to contact us. Write:

TORO "Customer Care" Department
8111 Lyndale Avenue South
Minneapolis, Minnesota 55420

COPYRIGHT 1971 BY
The Toro Company
MINNEAPOLIS, MINN. 55420 — U.S.A.

TO THE TORO OWNER

Congratulations ! !

You now own the finest turf tractor made, and we wish to welcome you to the ever-growing family of satisfied Toro Owners. Given proper care, this tractor will repay you with years of excellent service.

Your Toro General Tractor has been manufactured by an organization with over fifty years experience as mowing machine specialists. Every machine is carefully inspected and tested before leaving the factory. To make operating, servicing and maintaining your Toro Tractor as easy and convenient as possible, please read this Owner's Manual. It contains all the information you need, and is presented in a clear, concise manner. Do not hesitate to consult your authorized Toro Distributor if additional information is needed in operating your Toro Tractor properly.



Figure 1. General Tractor with Toro Seven Gang Parkmaster

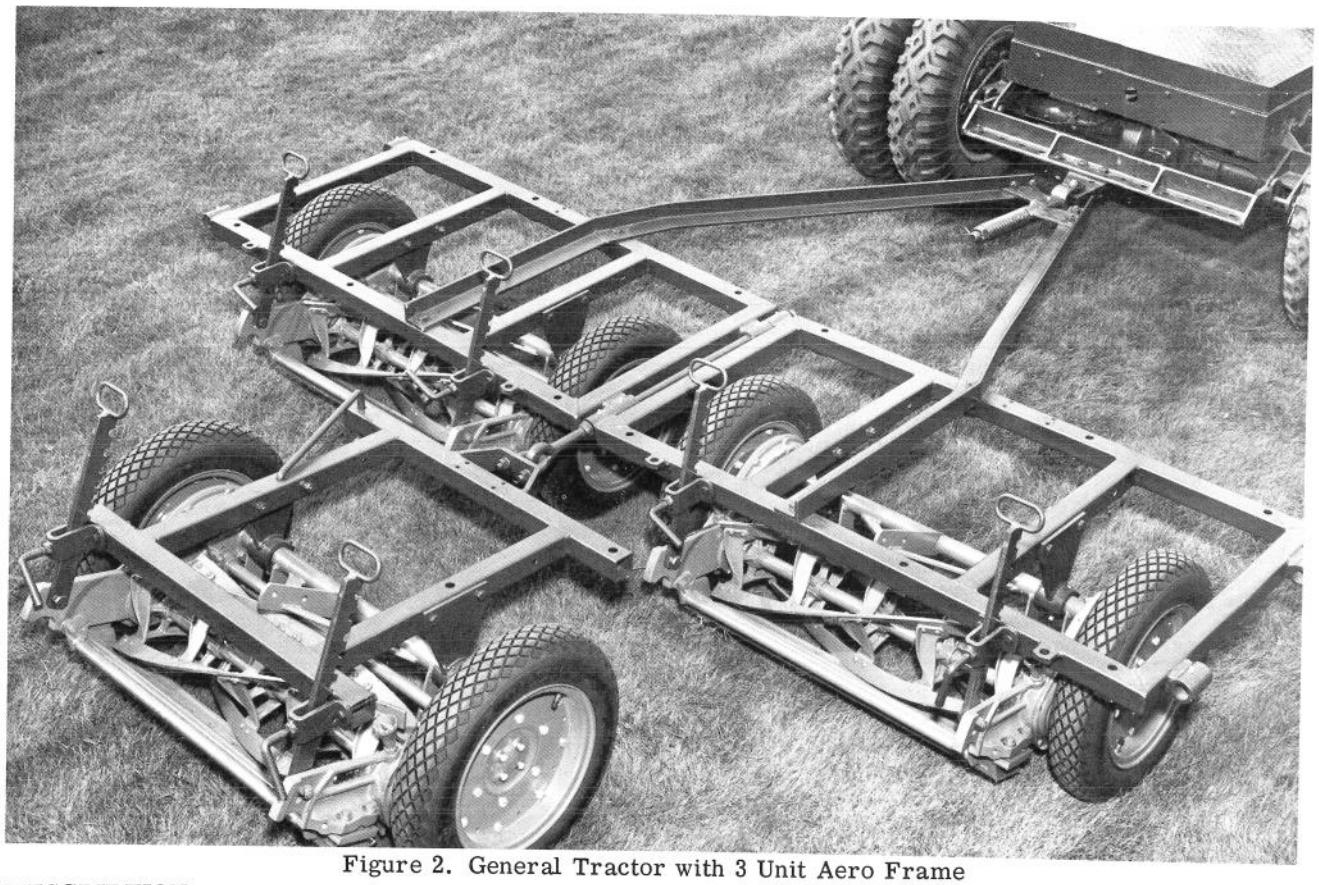

Figure 2. General Tractor with 3 Unit Aero Frame

1. DESCRIPTION

The Toro General Tractor is a highly engineered piece of equipment, designed to meet the requirements of turf maintenance.

The General Tractor is the power source for operating the heavy-duty Toro grass-cutting equipment. The General Tractor will handle five or seven gang Spartan Mowers, with either the hydraulic Parkmaster or the Universal Mounted Frame.

The universal frame, or any other towed frame, may be pulled by the adjustable draw bar, and the time tested Toro Utility Dump Box will fit the General Tractor as well as the earlier Toro Tractors. The Toro General Tractor is the latest development in a long history of Toro Tractors, incorporating such modern designs as Power Steering, Improved Seat and Suspension, and a host of similar refinements. With all the new features, the time tested design of the Toro Tractors has been retained, making the Toro General Tractor the leading tractor for all heavy-duty turf maintenance.

2. SPECIFICATIONS Model F226 "Red Seal"

ENGINE: Continental, six cylinder, L-type head, with a 3-5/16 inch bore and 4-3/8 inch stroke. Displacement is 226 cubic inches and the compression ratio is 7.5 to 1. The engine develops 79 horsepower at 2400 RPM and a maximum torque of 180 ft/lb. A gear-type oil pump delivers full pressure to all bearings.

STEERING: Recirculating ball screw, rack and pinion steering gear. Ball, thrust bearing on screw shaft, bushings on pinion shaft. 1-3/8" diameter tubular drag link. 17" diameter hard rubber steering wheel. 3-3/4 turns of the steering wheel from maximum left turn to maximum right turn. 20:1 gear ratio in steering gear. Lube capacity, 11 oz. grease such as Standard Oil "C", Industrial Grease #30.

SELF STARTER: 12-volt starter and 54 plate battery. 45 Ampere-Hour Capacity.

OIL FILTER: Replaceable element type with 1/2 quart capacity.

AIR CLEANER: Oil bath type with 1 quart capacity.

COOLING SYSTEM: Tractor type tubular radiator with plate fin core and stamped brass top and bottom tanks. Four (4) PSI pressure cap. 16 quart capacity with water pump circulation and thermostat.

GASOLINE TANK: 13-1/2 gallon capacity.

CLUTCH: 11 inch spring-loaded, foot operated.

TRANSMISSION: Sliding spur gears, four speeds forward, one reverse. Gear ratios are as follows: First Gear, 6.398 to 1; Second Gear, 3.092 to 1; Third Gear, 1.686 to 1; Fourth Gear, 1.000 to 1; Reverse Gear, 7.820 to 1.

DRIVE SHAFT: 2-1/2 inch diameter steel tubing with two universal joints.

REAR AXLE: Ring gear 7.17 to 1.000 ratio. Spiral bevel, hypoid gear set. Full floating drive axle shafts. 1-3/8 effective diameter. Malleable cast iron gear case, steel tubing trumpet housings. Removable differential carrier. Oil capacity 6-1/2 pints, SAE 90 gear lube.

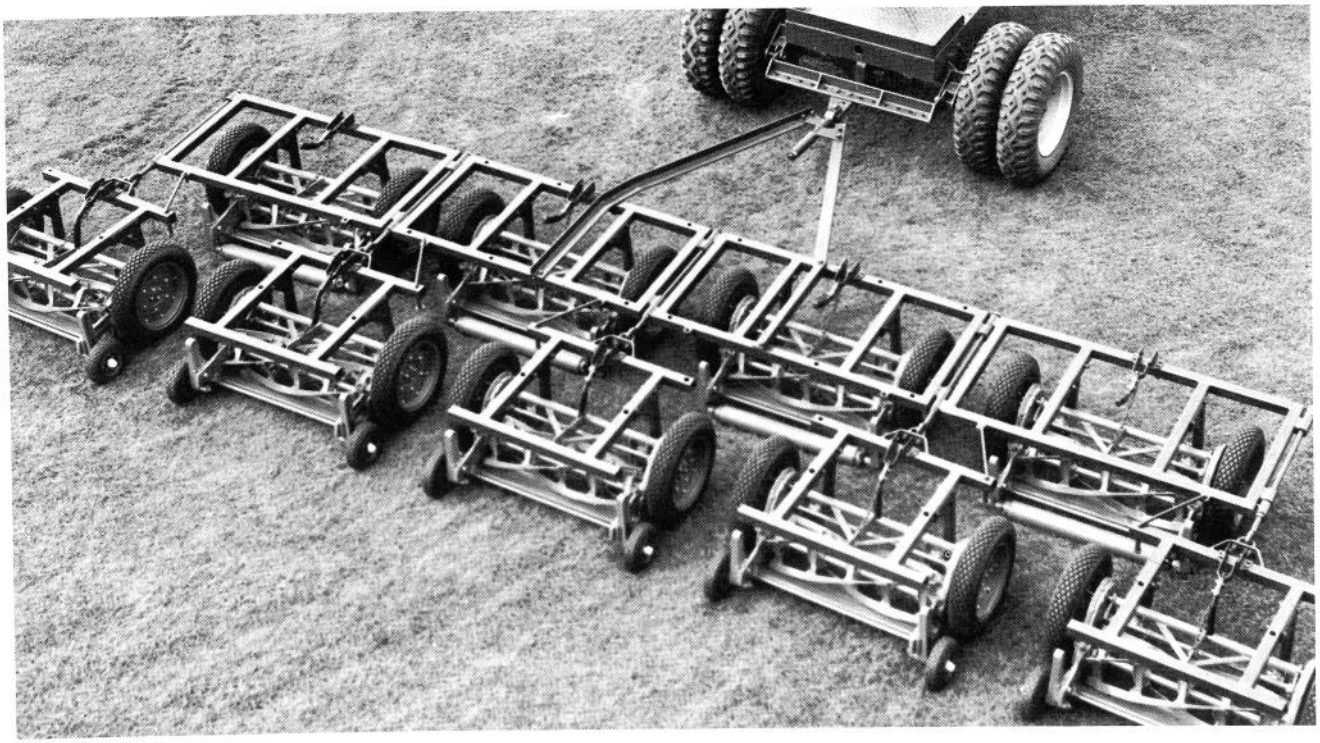

Figure 3. General Tractor with Roughmaster Frame and Nine Roughmaster Mowers

TURNING RADIUS: Minimum of 7'3" from center of turn to closest side of rear dual tire on inside of turn. May be increased by adjusting stops on front axle.

FRONT AXLE: Welded construction. 4 inch, 9 1/2 pound structural steel I-beam. Center pivot and wishbone integral with axle. Needle bearings and roller thrust bearings on steering spindles.

FRONT WHEELS: Cast iron hubs with taper roller bearings. Pressed steel wheels with drop - center 15x5 rims, used with 6.70-15 tires. 14x8 drop center rims used with 9.50-14 tires.

FRONT TIRES: Standard Tire 6.70 x 15, 4-Ply with tubes. Normal inflation 16 lbs. per sq. inch.

OPTIONAL TIRES: 9.50 x 14, 4-Ply with tubes. Normal inflation 16 lbs. per sq. inch.

REAR WHEELS: Cast iron with integral brake drums. Semi-drop center, demountable dual rims, 5.50x16.

REAR TIRES: Dual-All-Traction 7.50 x 16 with tubes which have air-water valves; Normal Inflation is 12 lbs. per sq. inch; Minimum Inflation 10 lbs. per sq. inch for fine turf areas. Maximum 20 p.s.i. for dump box work and transport for concrete or black top surfaces.

TIRELOAD RADIUS: 14.75 inches.

BRAKES: Hydraulic brakes on rear wheels, parking brakes provided by mechanical actuation of same brake shoes.

FRAME: Welded construction. 5 inch, 9 pound structural steel channel.

SEAT: Contoured with drape-around 13-inch high back rest. Seat pan and back rest have foam filler with integral fabric. Seat is mounted on an adjustable slide, with a five-inch adjustment forward or backward.

SEAT SUSPENSION: Adjustable with shock absorber to compensate for variable weight of operators.

BATTERY: 12 volt, 54 plate, 45 ampere-hour capacity. Battery includes anchor-bond construction where the plates are bonded to both top and bottom of case.

THROTTLE CONTROLS: Foot pedal. Fast idle in choke control linkage. Provision for variable-speed governor with hand quadrant control.

DRAWBAR: 13/16 inch diameter hitch hole. May be installed on tractor centerline, or any of six positions to a maximum of 16-7/8 inches either side of center. Height 19 inches from ground to top of drawbar. Drawbar is quick removable type.

DIMENSIONS:

Overall Length:	133 inches w/o dump box, 150 inches with dump box.
Height:	54-1/4 inches over front hood. 68 inches over steering wheel. 58-1/2 inches over dump box, 69-1/2 inches with 1/2 yard extension.
Maximum Width:	82 inches (across rear tires).
Wheel Base:	98 inches.
Front Wheel Tread:	57-1/2 inches.
Rear Wheel Tread:	63 inches.
Curb Clearance:	10 inches.

WEIGHT:

2810 pounds total curb weight, includes coolant, fuel and lubricants.

1455 pounds on front wheels (52% of total).

1355 pounds on rear wheels (48% of total.).



Figure 4. Toro General Tractor with Toro Dump Box Attached

3. OPERATION

The operation of your new Toro General Tractor is as easy as driving your automobile. The operating controls are in approximately the same location and their manipulation is similar. (See figure 5.) Before using the tractor for the first time, read your Engine Manual CAREFULLY.

Before starting the tractor, make certain that the transmission is in the neutral position. To start the engine, turn the ignition key all the way clockwise, releasing it as soon as the engine starts. The carburetor choke valve is controlled by the knob on the instrument panel. Pulling the knob out the first 1/4 inch produces a fast idle speed for starting; pulling the knob out further operates the choke valve in the carburetor.

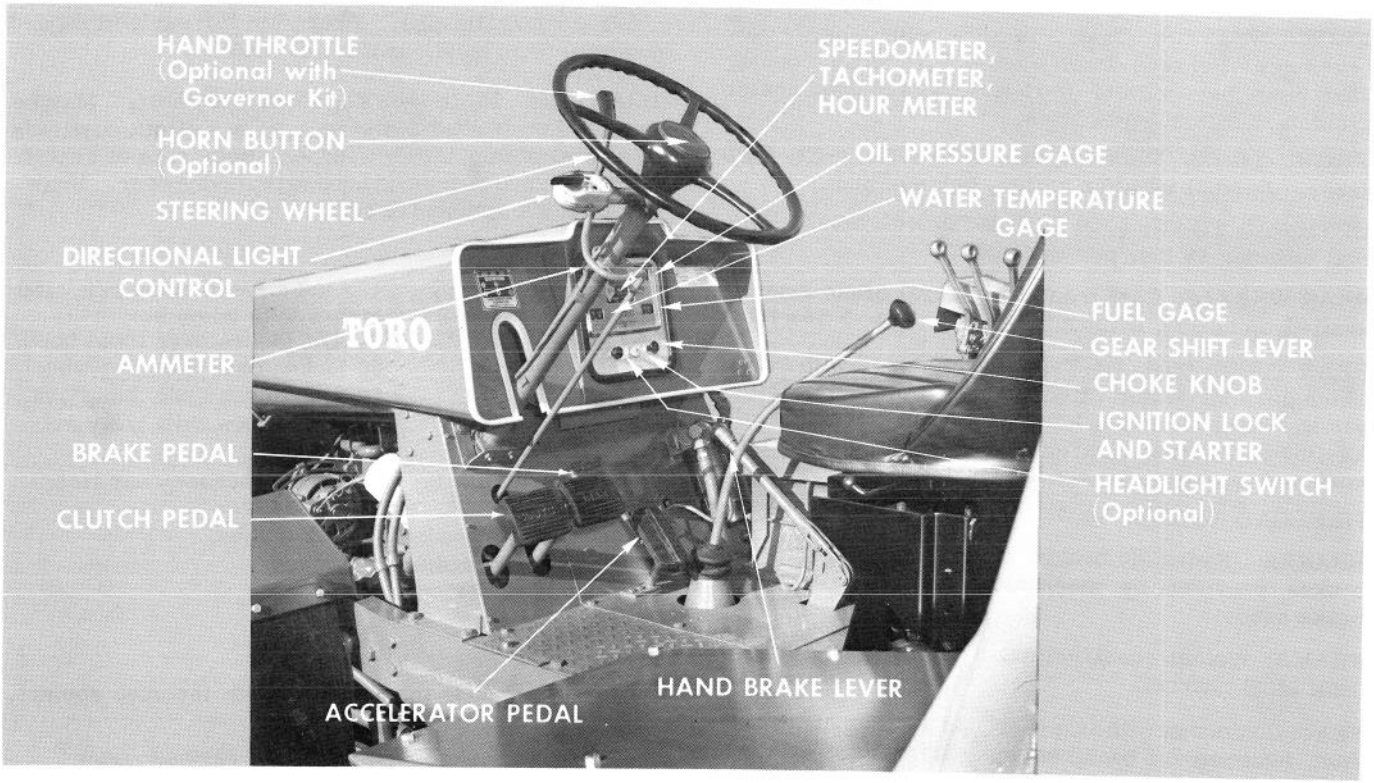

Figure 5. Operating Controls and Indicating Instruments

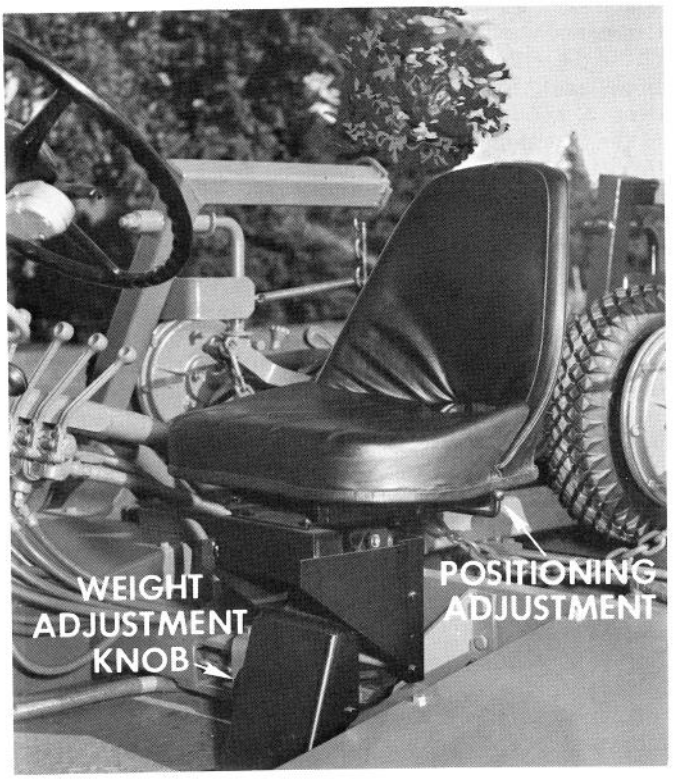

Figure 6. Operator's Seat

The forward and backward positioning may be adjusted by pulling out the lever at the left of the seat, sliding the seat to the position desired and releasing the lever. The weight adjustment knob may be adjusted for any operator's comfort.

The following gear recommendations show which gear should be selected to correctly perform various tractor applications.

FIRST GEAR: Use for jobs requiring slow speed, or for heavy cutting with Rotary Mower.

SECOND GEAR: The principal gear for all gang-mower work. Most operations will be in this gear.

THIRD GEAR: A faster speed for light mowing conditions.

FOURTH GEAR: Transport. The General Tractor has a faster transport speed than previous Toro Tractors and will usually keep up with city traffic if streets are reasonably smooth.

4. MAINTENANCE

AIR CLEANER

Your Toro General Tractor is equipped with an oil bath air cleaner. The importance of servicing this cleaner cannot be over-emphasized. Very few preventive maintenance measures give you so much in retarded engine wear in return for so little time and effort. (See figure 8.)

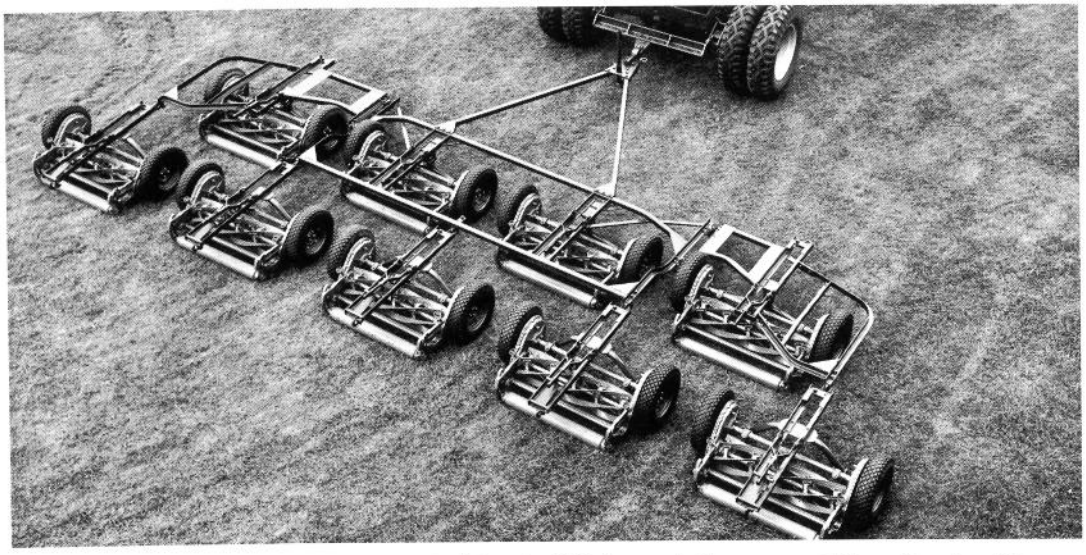

Figure 7. Toro General Tractor with Attached Universal Frame and Nine Spartan Mowers

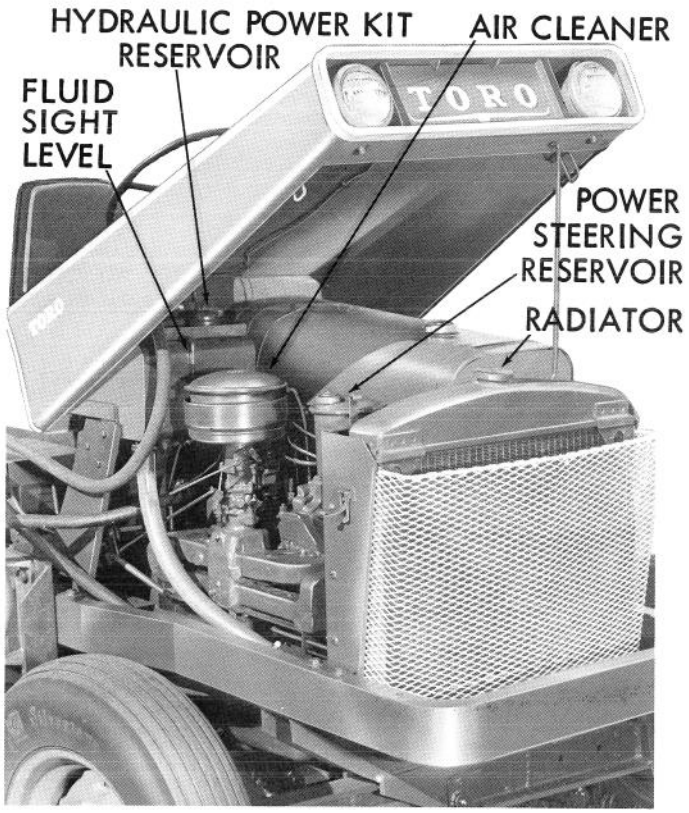

Figure 8. Right-Front View of General Tractor.

The owner or operator is the best judge in determining the necessary interval for servicing the air cleaner, due to the wide variety of possible operating conditions. In general, the air cleaner should be serviced whenever a 1/4 inch of sludge accumulates in the bottom of the air cleaner pan. In extremely dusty operations, the air cleaner may have to be serviced as often as once or twice a day.

To service the air cleaner, remove the thumb screw at the top of the cleaner and lift off the strainer section. Loosen the screw at the base and lift the cleaner straight up from the carburetor. Pour the oil out and wipe the body dry with a clean rag. Fill the body to the level mark with the same weight oil as used in the engine. Wipe the bottom of the strainer and install it on the body with the thumb screw. Position the air cleaner on the carburetor and secure it with the screw on the base. Make certain that the air cleaner is on tight.

GREASE FITTINGS

Before servicing any of the grease fittings on the tractor, clean the fitting with a rag to make sure that no foreign matter will be forced into the bearing with the lubricant. (See figure 15.) When servicing a fitting, make certain that the bearing is taking grease. Keep applying lubricant to the fitting until you can see some of the grease coming out from the sides of the bearing. Wipe the fittings clean after servicing.

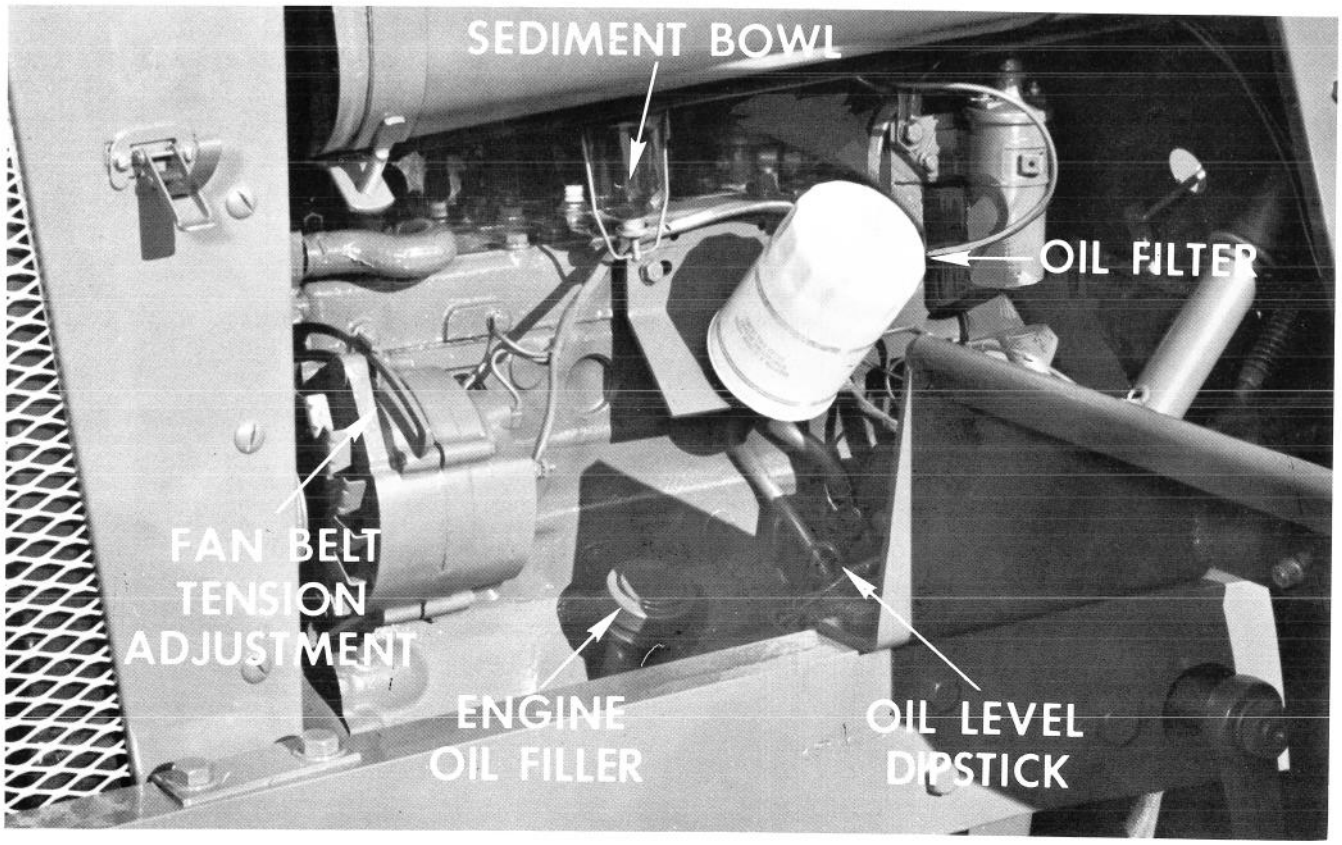

Figure 9. Left Side View of Engine

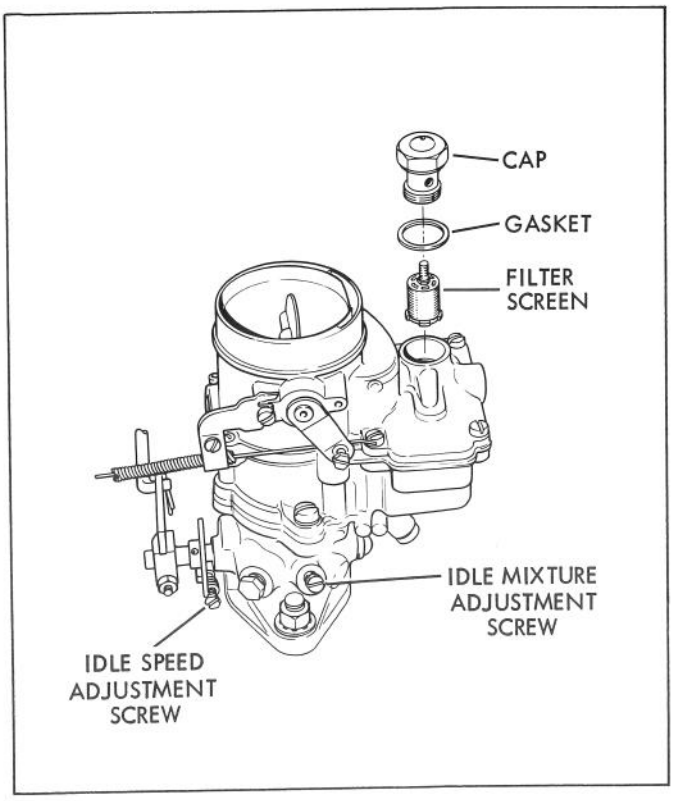

Figure 10. Carburetor Fuel Filter

FUEL FILTERS

Your General Tractor is equipped with two filters in the fuel line. One is a metal screen in the sediment bowl below the fuel tank (see figure 9). The other is a disc-type filter in the carburetor (see figure 10). It should be noted here that whenever trouble occurs, and indications point to a lack of fuel, one of the first things to suspect is a clogged filter, and it will generally be the one in the carburetor.

The screen in the sediment bowl will rarely need cleaning; however, the fuel may be shut off, and by removing the glass bowl, the screen may be cleaned if necessary.

To clean the filter in the carburetor, remove the retaining cap and gasket. Unscrew the filter and blow clean with compressed air.

BATTERY

Keep the liquid level in the battery about 3/8 inches over the top of the plates. The specific gravity of the battery should be 1.250. Check each cell. If the tractor is to be used during extremely cold weather, it is important that the battery has a full, or near full charge. A fully charged battery can withstand a much lower temperature. Use only distilled water in the battery. During cold weather, run the engine for 15 to 20 minutes after adding water to prevent freezing.

FAN BELT TENSION

Check the fan belt tension at every oil change. Correct tension should allow between 3/4 inch and 1 inch slack on the long span. To adjust the tension, loosen the adjusting screw (see figure 9) and either move the alternator away from the engine to increase the tension, or closer to the engine to relax the tension. When correct tension is obtained, tighten the adjusting screw.

UNIVERSAL JOINTS

When servicing the universal joints, (see figure 15), remove the slotted plug from each universal joint and install a grease fitting. Grease the universal joints with a good grade of semi-fluid lubricant. Remove the grease fittings and securely re-install the slotted plugs. The grease fittings are not oil-tight and this procedure will prevent leakage.

CAUTION

Use only a hand-operated grease gun on the universal joint fittings. Lubricate only until added resistance is felt on the grease gun. If too much pressure is applied to the fittings, the grease seals may be ruptured.

BRAKE ADJUSTMENT

The hydraulic brakes should be adjusted whenever the brake pedal has more than 2 inches of free travel. Block the front wheels and jack up the rear wheels. Make certain that the transmission is in the neutral position. Remove the protective plugs from the adjusting slots in the brake plates and tighten the starwheel with a screwdriver until the wheels are locked. Back off the starwheel 12 to 15 notches, or until the wheel turns freely. Adjust the brake on the opposite wheel in the same manner and replace the protective plugs.

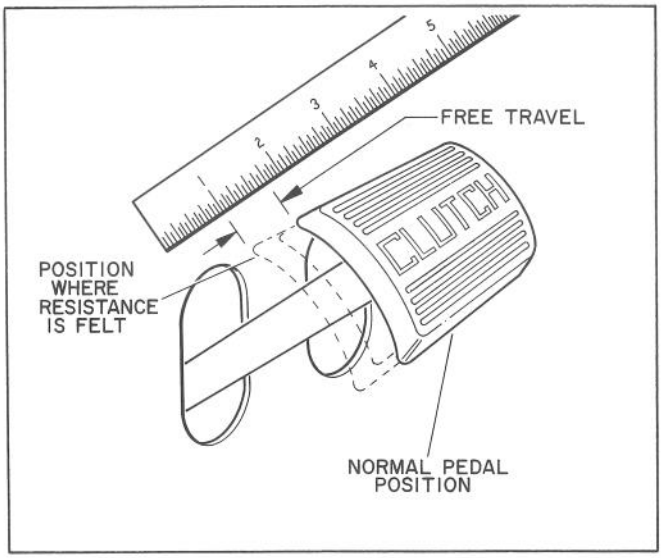

Figure 11. Clutch Pedal Free Travel Measurement

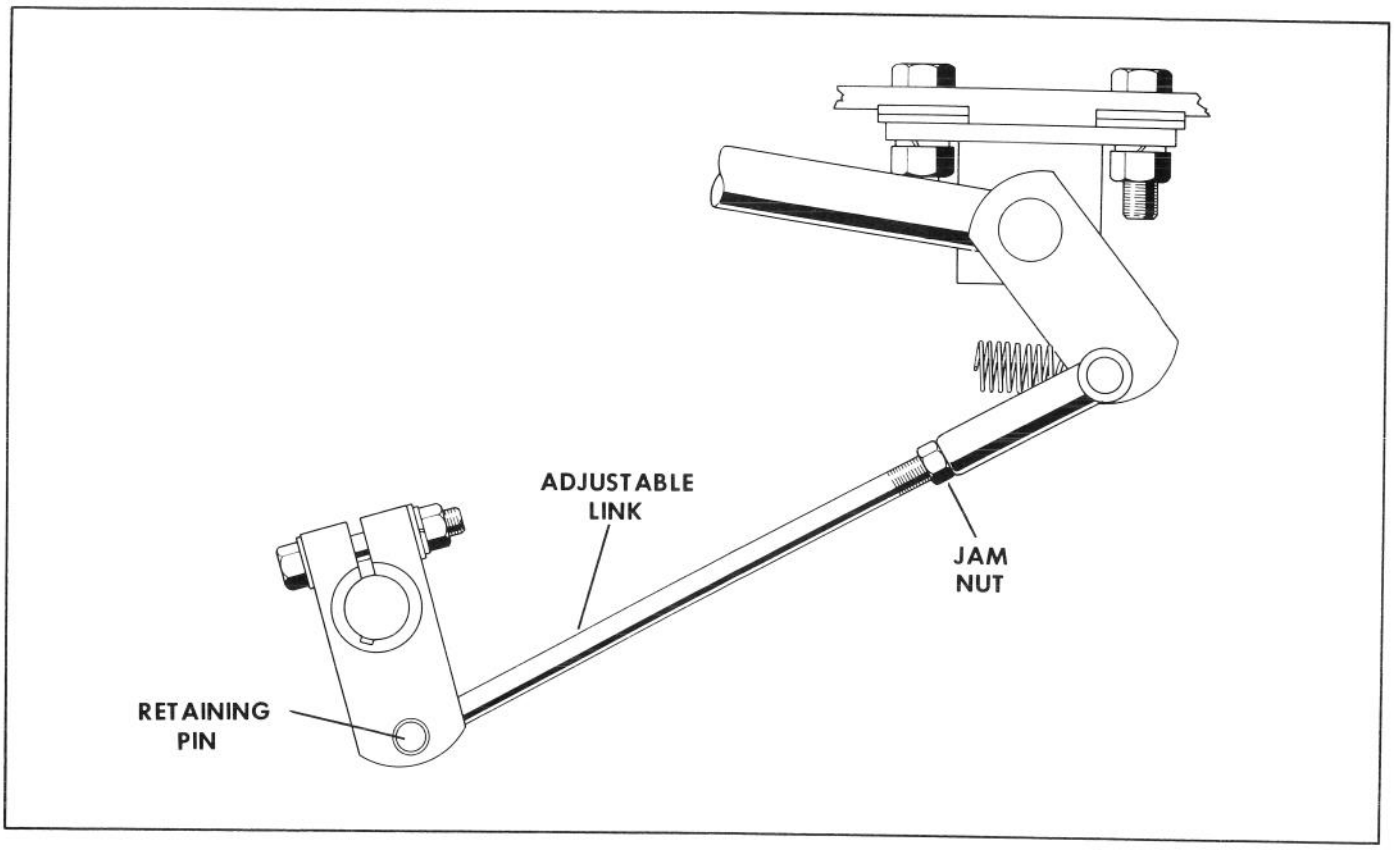

Figure 12. Clutch Linkage

HAND BRAKE ADJUSTMENT

The hand brake adjustment of your Toro General Tractor is very simple to make. When it is apparent that the brakes are in need of adjustment, place the hand brake lever in the released position and turn the knurled nut at the top of the lever in a clockwise direction about four turns. Park the tractor on a fairly steep slope with the rear of the tractor facing down hill and the transmission in neutral. Apply the hand brakes. If they will not hold, release the hand brake lever and tighten the knurled nut further. Repeat until the tractor will hold on the slope.

CLUTCH PEDAL FREE - TRAVEL ADJUSTMENT

The clutch pedal free travel should be measured at least once a month. To measure the free travel correctly, the measurement must be made at the clutch pedal foot pad. By pressing down on the clutch pedal with your hand, you will find that it will travel a certain distance before an added resistance is felt. The distance from the normal released clutch pedal position to the point where added resistance is felt is the free travel (see figure 11). Place a ruler along the side of the clutch pedal and measure the amount of free travel. If the free travel is less than 3/8 of an inch, the clutch should be adjusted.

To adjust the clutch (see figure 12), remove the cotter pin and retaining pin from the adjustable link at the clutch throw-out lever. Loosen the jam nut at the other end of the adjustable link and turn the link counterclockwise about three turns. Lock the jam nut and secure the adjustable link with the retaining pin and cotter pin.

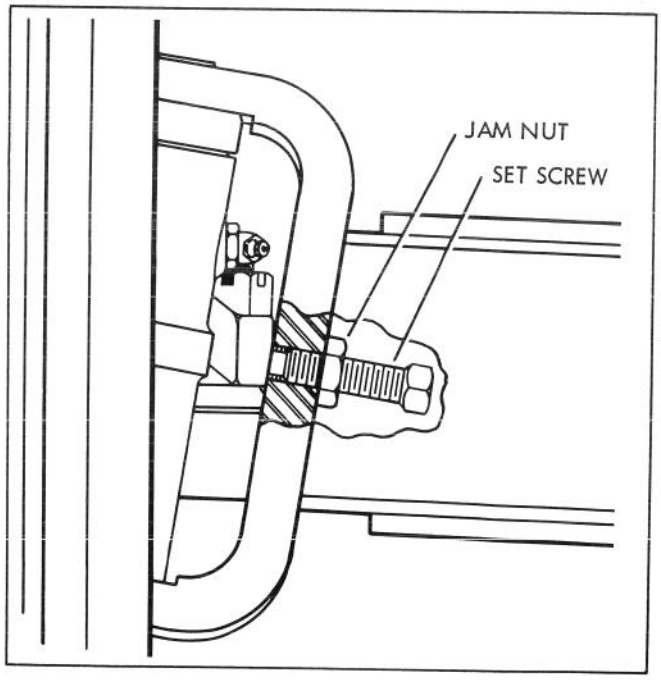

Figure 13. Minimum Turning Radius Adjustment

It is best not to disconnect the adjustable link from the clutch pedal end, as the pedal return spring will be extremely difficult to replace. Hold the throwout lever from moving all the way forward when it is disconnected - if it moves too far, the throwout fingers may lose contact with the throwout bearing, and it will be necessary to open the clutch inspection cover to set them in place again.

After the first adjustment has been made, measure the pedal free travel. Repeat this operation until about 3/4 inches of free travel exists at the pedal.

MINIMUM TURNING RADIUS ADJUSTMENT

The minimum turning radius of the General Tractor is 7 feet 3 inches from the center of the turn to the closest side of the rear dual tire. If you wish to increase the minimum turning radius, you may do so by adjusting the setscrews in the ends of the front axle (see figure 13). To increase the turning radius, position the front wheels to the right at the desired minimum turning radius angle and loosen the right side jam nut. Turn the setscrew in until it stops and retighten the jam nut. Turn the front wheels to the desired minimum turning radius for a left turn and adjust the left side setscrew in the same manner.

RECOMMENDED PROCEDURE FOR TRACTOR STORAGE

If you wish to store the General Tractor for a long period of time, the following steps should be accomplished prior to storage.

1. WITH THE ENGINE WARM, drain the engine oil and replace the drain plug.
2. Refill the oil pan to 1/2 its normal capacity with clean, high grade, SAE 50 engine oil.
3. Start the engine and run at about 700 RPM for at least one minute, but NO MORE THAN 2 minutes, to complete oil distribution to all surfaces.
4. Stop the engine and remove all of the spark plugs.
5. Pour 3 ounces of SAE 50 engine oil into each of the spark plug holes.
6. Pull the high-tension wire out of the top of the coil, and crank the engine with the starter for at least a dozen revolutions to distribute the oil over the cylinder walls and valve mechanism.
7. Replace all spark plugs, the high-tension coil wire, and all spark plug wires.
8. Drain the oil from the engine pan and replace the drain plug. Fill with regular weight oil.
9. Drain the coolant by opening the petcock at the bottom of the radiator AND the one at the left side of the engine block. After all of the coolant has drained, close both of the petcocks.
10. Drain all of the gasoline from the fuel tank, lines, and carburetor bowl. Remove the sediment bowl, discard the gasoline, and replace the bowl.
11. Seal the air cleaner inlet, the exhaust outlet, and the crankcase breather tube with weather-proof masking tape. Prior to applying the masking tape, wipe all oily or greasy surfaces to which the tape must adhere with a rag saturated with gasoline. After most of the oil or grease is removed, wipe the surface dry with a clean, dry rag.
12. Make certain that the oil filler cap, gas tank cap, and the radiator cap are securely in place.
13. Disconnect and remove the battery from the tractor. If possible, the battery should be stored in a COOL, DRY place. About once a month, check the liquid level and specific gravity of each cell. When the battery has a full charge, the specific gravity should be 1.250.
14. Place the transmission lever in the neutral position and apply the hand brake.
15. Jack up the front of the tractor until the wheels are just off the ground and place blocks under the front axle.
16. Jack up the rear of the tractor in the same manner as above and place blocks under the rear axle.
17. If possible, cover the entire tractor with a heavy piece of plastic or a canvas drop-cloth.

ENGINE TUNE-UP

Detailed instructions on tuning the engine will be found in the applicable engine manual. In most cases, an engine tune-up will consist of the following steps:

1. Replacing, or cleaning and re-gapping the spark plugs, depending on their condition and length of service.
2. Replacing the breaker points in the distributor.
3. Gapping the distributor breaker points.
4. Replacing the condenser in the distributor.
5. Setting the ignition timing.
6. Setting the idle mixture and idle speed adjustment screws on the carburetor (see figure 10).

SERVICE INTERVAL CHART

Fig. & Ref. No.	Service Point	Service Interval: Daily	50 Hours	150 Hours	500 Hours	Type of Lubricant or Service
15-1	Steering Linkage		*			Chassis Lubricant
-2	Front Axle Pivot Point		*			Chassis Lubricant
-3	Wishbone Pivot Point		*			Chassis Lubricant
-4	Steering Gear (Check Level)			*		140 Gear Lube
-5	Power Steering Cylinder		*			Chassis Lube
-6	Front Wheel Bearings				*	Fibre Wheel Grease
-7	Transmission			*		90 Gear Lube
-8	Brake Master Cylinder			*		Brake Fluid
-9	Hand Brake Linkage		*			10 W Oil (Use Oil Can)
-10	Clutch Linkage				*	Chassis Lube
-11	Universal Joints				*	Chassis Lube
-12	Rear Axle			*		90 Gear Lube
-13	Engine Drain Plug		*			Drain and Refill
Fig. 9 (P. 8)	Sediment Bowl (As Needed)					
	Oil Filter			*		Replace Cartridge
	Engine Oil	*				Check Level
	Engine Oil Filler (As Needed)					Maintain Level
	Fan Belt Tension Adjustment		*			Check Tension
				*		
Fig. 8 (P. 8)	Hydraulic Power Kit Reservoir				*	Type A trans. oil or SAE 10 oil,
	Fluid Sight Level	*				Check Level non-detergent
	Air Cleaner (As Needed)					Same oil as engine
	Power Steering Reservoir - Check Level		*			SAE 10 W, or Type A Trans.
	Drain and Re-fill				*	Daily Check
	Radiator	*				Check Level
	Distributor Cam			*		Small amount of chassis lube.
	Brake Linkage, Distributor Oil Point, and Carburetor Linkage		*			3 or 4 Drops 10 W Oil
	Battery		*			Check Level
	Engine Oil Drain (At Bottom of Engine)		*			Drain When Warm
	Tire Pressure - Front			*		
	Tire Pressure - Rear			*		

NOTE: Use oil rated for MS Service

---- Expected Temperatures ----	
32° F to -10° F	Use 20 or 20 W Oil
32° F to 75° F	Use 20 W Oil
75° F and Above	Use 30 W Oil

ENGINE OIL

Figure 14. Service Interval Chart

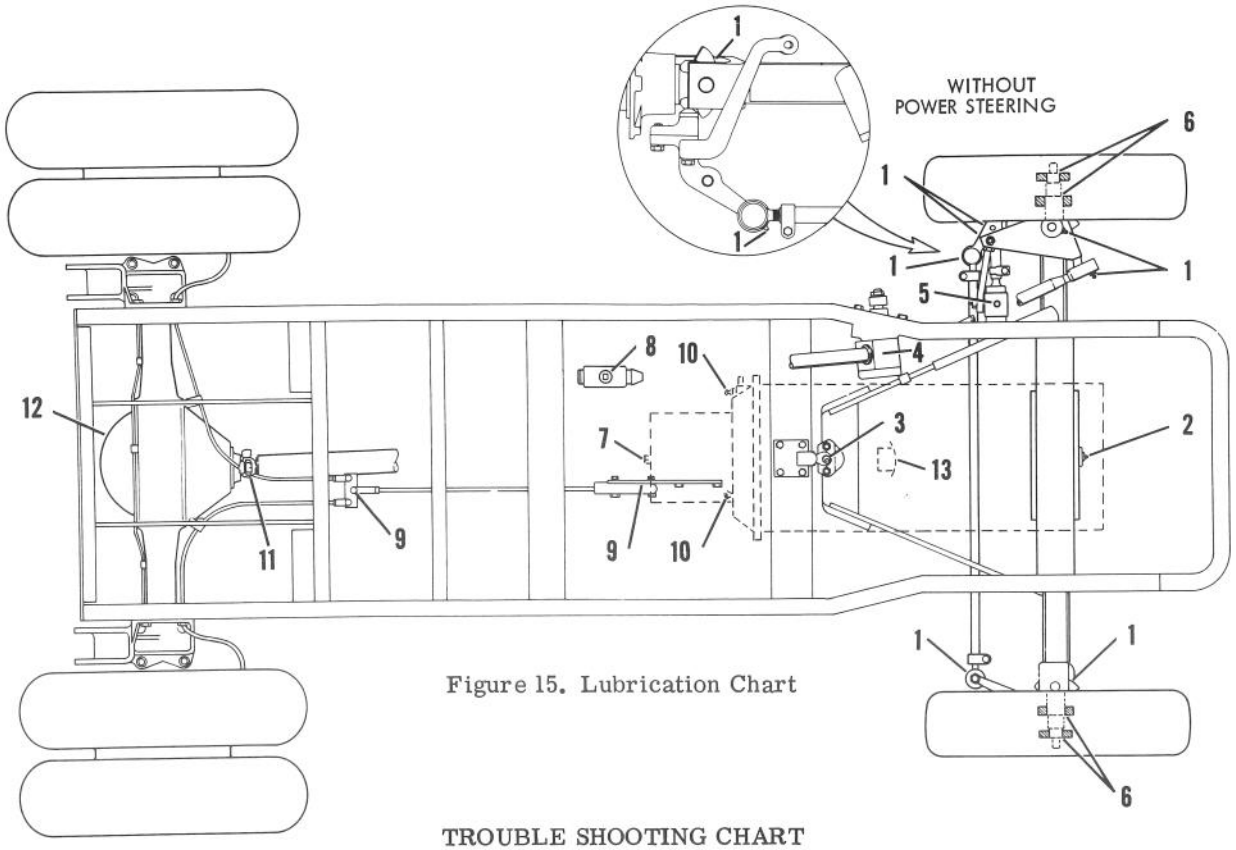

Figure 15. Lubrication Chart

TROUBLE SHOOTING CHART

TROUBLE	PROBABLE CAUSE	REMEDY
Hard steering.	Front tire air pressure low. Steering gear low on lubricant. Steering linkage dry. Spindle frozen. Oil level in pump low (with power steering).	Check pressure. Fill steering gear. Re-grease linkage. Replace. Bring up to level.
Transmission hard to shift.	Heavy lubricant in cold weather. Transmission lubricant low.	Use #90 lubricant in winter. Refill to proper level.
Gears grind when shifting.	Too much free travel in clutch pedal. Operator shifting gears with tractor in motion. Transmission shift fingers bent.	Re-adjust linkage. "Double clutch" when shifting on the move, or else stop the tractor to shift gears. Inspect and replace.
Brakes will not hold.	Leak in hydraulic system. Brake fluid low in master cylinder. Brake shoes worn Shoes wet. Shoes soaked with oil.	Inspect and seal. Refill with clean brake fluid. Adjust brakes or replace brake shoes. Allow to dry. Replace shoes.
Hand brakes will not hold.	Hand brake linkage set too loose. Brake shoes worn down too far.	Re-adjust lever. Replace shoes.
Brakes "fade" after prolonged operation.	Brake shoes adjusted too tight.	Back off star wheels five to ten notches.

NOTE: FOR TROUBLES PERTAINING TO THE ENGINE; REFER TO YOUR ENGINE MANUAL.

Figure 16. Trouble Shooting Chart

CABS FOR GENERAL TRACTOR

MODEL "D" FOR DUMP AND "STRAIGHT" TRACTORS



CAB: All steel construction, electric welded and reinforced at all stress points. 17 ga. sq. tubing framework, 20 ga. exterior panels and 20 ga. corrugated steel roof. One door on left side with 7/32 sheet glass windows on both sides. Windshield has safety sheet glass with one vacuum windshield wiper on left side. Dimensions 58" high, 54" wide, 48" long (from firewall to rear). Weight approximately 330 lbs.

MODEL "M" FOR PARKMASTER



OPTIONAL EQUIPMENT

Power Steering (#70064): Ross linkage-type booster mounted on front axle, controlled through bell crank by standard drag link and steering gear. Eaton pump, belt-driven from crankshaft; requires 3 to 5 lbs. manual effort on rim of steering wheel. Uses 10W motor oil, 2 qt. capacity. 3 turns of the steering wheel from maximum left turn to maximum right turn.

Hydraulic Kit (#70023): Required with any hydraulically operated equipment. Consists of Webster 2HCS-11R pump with integral gear for driving off engine timing gear, 12-qt. reservoir and full-flow 25 micron filter with replaceable paper cartridge, plus necessary lines, fittings and mounting parts. Pump turns at engine speed. Output 7.7 GPM at 1250 RPM; 12.7 GPM at 2000 RPM.

Governor (#70104): Variable speed governor controlled by quadrant-type hand throttle lever mounted on the steering column. Normal governed no-load speed 2200 RPM. Effective speed control from 1200 RPM to 2200 RPM.

Rear Platform Extension (#70053): Floor plate to cover the rear portion of the frame when neither dump box nor Parkmaster is installed. Provides fence 3 inches high around back and sides.

Road Kit (#70098): Consists of horn, directional signals, head and tail lights.

Horn: Kit consists of 12-volt utility horn with horn relay and waterproof horn button to fit center of steering wheel, and necessary wires, mounting bracket and fasteners.

Directional Signals: Kit consists of non-cancelling controller for mounting on steering column, with 2 pilot lights, 12-volt flasher, and fuse. Four 12-volt SAE Class A type 1 signal lamps and mounting brackets.

Headlights and Tail Lights: Two headlights, 12-volt, 35 watt all glass sealed beam, single filament, 4 1/2 inch lens, adjustable mounting push-pull switch for mounting on instrument panel. Two 12-volt tail lights with double filament bulbs, combination tail and stop light with all necessary wiring.

Front Fenders (#70191): Welded steel construction with rubber and fabric flaps. Fenders prevent material from being thrown from front tires rearwards (see photo below).

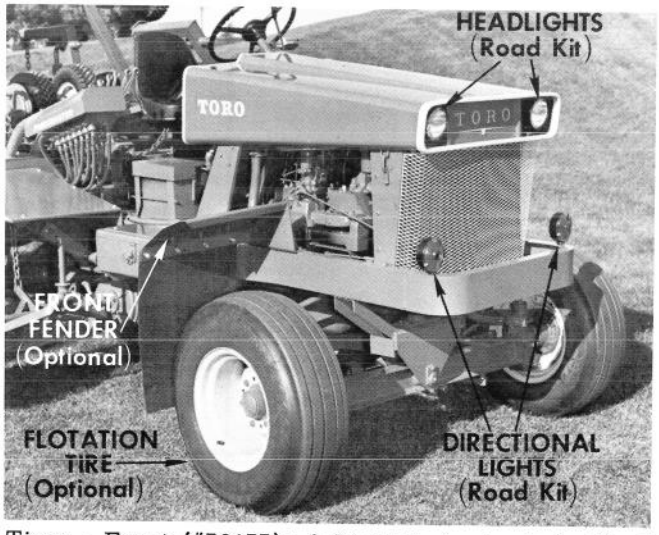

Tires - Front (#70177): 6.70 x 15, 4-ply, 1-1 ribbed tire with tubes. Normal inflation, 16 PSI.
(#70180): 9.50 x 14, 4-ply, 1-1 ribbed tires with tubes. Normal inflation, 10 PSI.

OPTIONAL EQUIPMENT (Cont'd.)

AVAILABLE IMPLEMENTS:

Parkmaster Frame: Five or seven unit hydraulically-controlled gang mower.

Dump box (#70043): One cubic yard capacity. 7 gauge steel, electrically welded. Over-center dumping, mechanical trip. Half-yard extension available at added cost. Empty weight: 450 lbs.

Towed Implements: The tractor provides a standard drawbar by which a wide variety of the implements can be pulled. Among these are the Toro Universal frame, and the Roughmaster-Aero frame.

MAINTENANCE RECORD

DATE	ENGINE OIL	ENGINE OIL FILTER	AIR CLEANER	FUEL FILTER	POWER STEERING OIL CHANGE	COOLING SYSTEM	TRANS. LUBE

MAINTENANCE RECORD

REAR AXLE LUBE	UNIVERSAL JOINTS	STEERING GEAR	FRONT WHEEL BEARINGS	CLUTCH ADJUSTMENT	BRAKE ADJUSTMENT	CHASIS & FRAME LUBE	ENGINE TUNE-UP

LITHO IN U.S.A.