Form No. 3310-580

TORO®

MODEL NO. 77021

INSTALLATION INSTRUCTIONS

FIELD INSTALLED ROLL OVER PROTECTION SYSTEM

This Roll Over Protection System will fit, and is certified to be used on, the following TORO Tractor and Parkmaster units:

General Tractor (Gas)	Model 37027
Parkmaster 5 Tractor (Gas)	Model 33755
Parkmaster 7 Tractor (Gas)	Model 33787
Parkmaster 9 Tractor (Gas)	Model 33876
Parkmaster 7 Tractor (Diesel)	Model 33677
Parkmaster 9 Tractor (Diesel)	Model 33699

All of the above units that were built prior to August, 1973 must include the following items to meet certification requirements:

Four gussets, Two plates — Included with kit. Must be welded to tractor frame.

(The above parts are standard on tractors built after August, 1973.)

One seat assembly 21-4880, One seat suspension 21-4930 — Must be purchased separately from Repair Parts Department.

To install the roll bar assembly on tractors built in August, 1973 and after, proceed as follows:

1. Remove the tool box and supports. Remove the two long capscrews holding the side plate to the frame and install the front mounts. Secure each mount with the long capscrews and two 1/2 x 2-1/4" capscrews.
2. Remove the cover plates from the fenders.
3. Install each rear mount to the frame with four 1/2 x 3-1/2" capscrews.

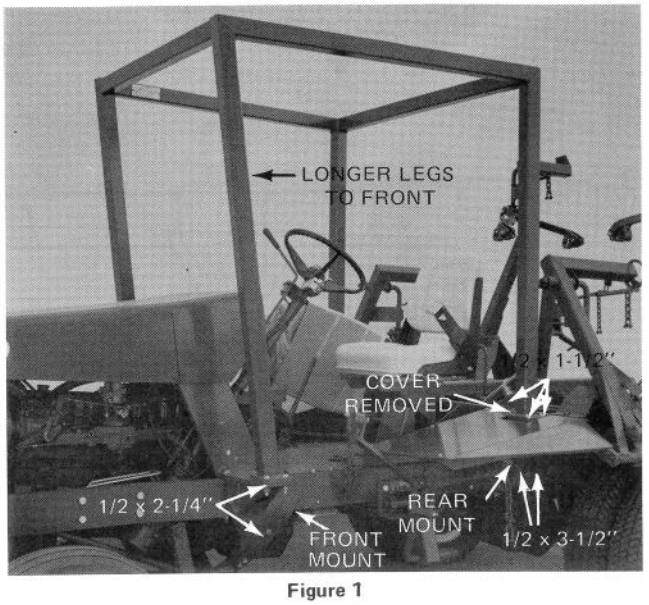

Figure 1

4. Set the roll bar on the mounts as shown and secure the front legs with 1/2 x 2-1/4" capscrews and the rear legs with 1/2 x 1-1/2" capscrews.
5. Attach the seat belt to the seat frame as shown in Figure 7. The extendible half of the belt can be attached to either side, whichever is more convenient.
6. Attach the tool box as explained on page 2.

To install the roll bar on tractors built prior to August, 1973, proceed as follows:

1. Remove the tool box and supports. Remove as much of the Parkmaster frame as is necessary to gain access to the area where the gussets are to be welded. (See Figures 3 and 4.)
2. Remove the rear fenders. Either purchase new fenders (Part Nos. 21-5480 and 21-5490) or cut out a portion of the fenders according to the dimensions in Figure 2.

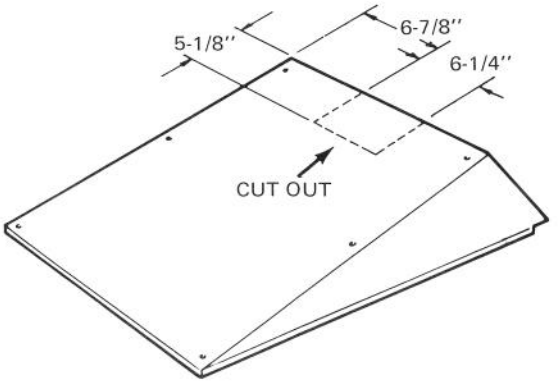

Figure 2

3. Mark and drill four 17/32" holes in each side of the frame according to the dimensions given in Figure 3.

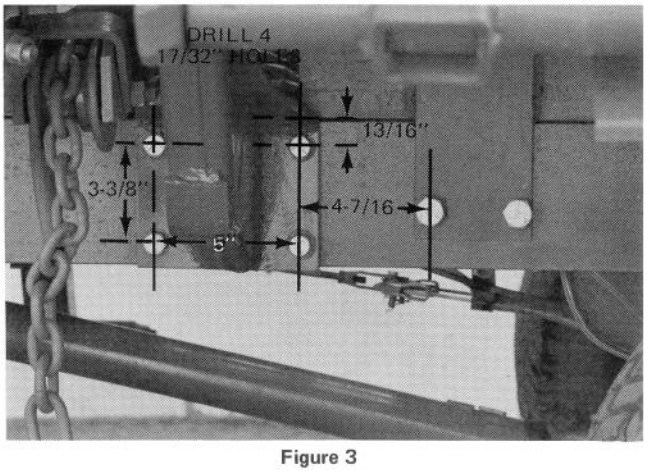

Figure 3

4. Use the four 1/2 x 3-1/2" capscrews and nuts to hold the mounting plate to the inside of the frame and weld in place with the top of the plate flush with the frame.
5. Weld the gussets to the mounting plates and the cross member according to the dimensions given in Figure 4.

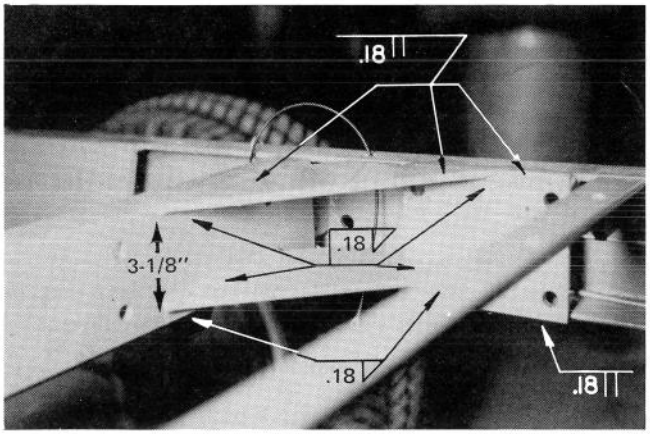

Figure 4

6. Grind off any excess weld on the top side so the surfaces are flush with the frame.

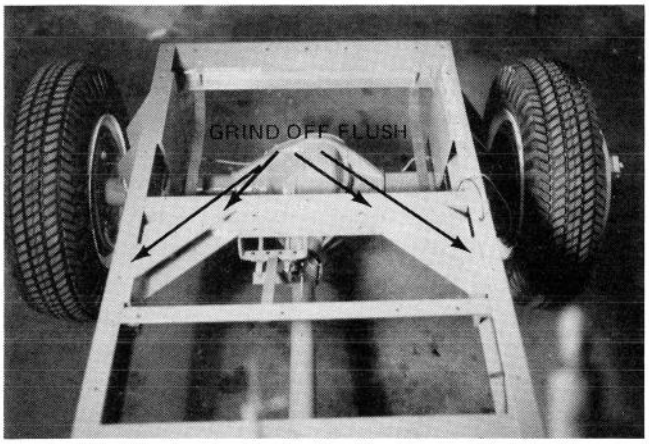

Figure 5

7. Secure the rear mounts to the frame with 1/2 x 3-1/2" capscrews, lockwashers, and locknuts as shown in Figure 3.
8. Install the new or reworked fenders.
9. Remove the capscrews holding the rear side plates to the frame and install the front mounts. (The long capscrew is used in front hole on left side.) Mark the position of the lower holes and drill two 5/8" holes through the belly band and gusset. Secure the mounts with the 1/2 x 2-1/4" capscrews through the holes just drilled.

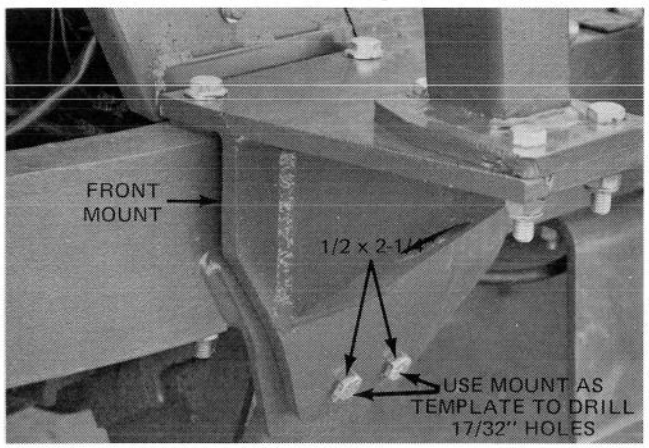

Figure 6

10. Install the roll bar as shown in Figure 1.
11. Remove the old seat and suspension. Install the new seat and suspension as shown in Figure 7.

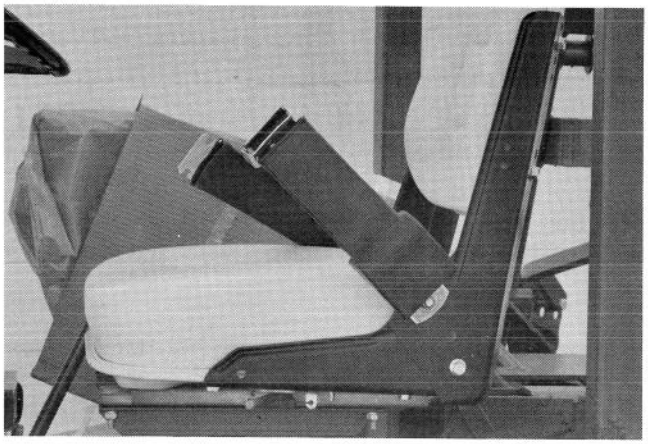

Figure 7

12. On units with 7- or 9-Unit Parkmaster Frames installed, position tool box on right hand fender as shown in Figure 8, use the holes in the tool box as a template, drill four 7/16" holes, and attach the tool box with the existing fasteners.

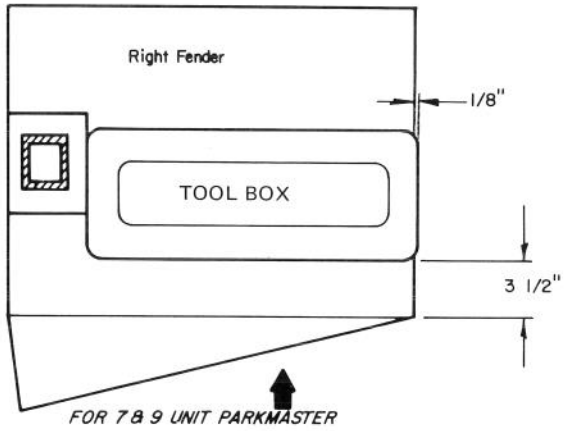

Figure 8

13. For a bare tractor, or one with a dump box, drill a 17/32" hole in the frame at the location shown in Figure 9. Attach the rear support to this hole, and the front support to the hole previously used for the rear support. Attach the tool box with the existing fasteners.

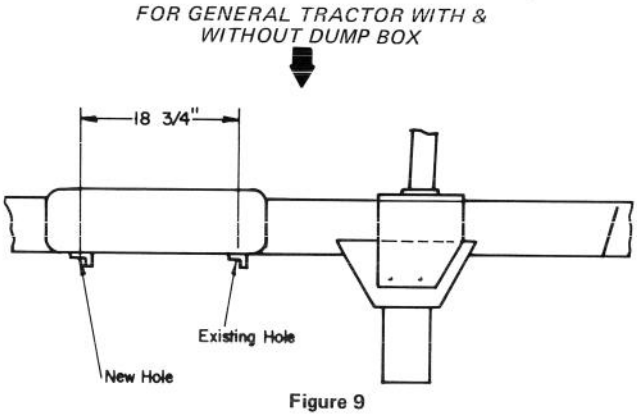

Figure 9

14. On units with a 5-Unit Parkmaster Frame, mount the tool box in the regular position, but replace the existing supports with two 22-4840 supports, and secure with the existing fasteners. (Supports 22-4840 must be purchased separately from the TORO Repair Parts Department).