Form No. 3328–556

Groundsmaster® 4000–D

Traction Unit

Model No. 30410—230000001 and Up

Parts Catalog

Ordering Replacement Parts

To order replacement parts, please supply: the part number, the quantity, and the description of each part desired.

Understanding Reference Numbers

Each identified part in an illustration has a reference number. The reference number for a part also appears in the parts list, along with other information about the part.

This catalog uses two special reference number formats, one to indicate parts in a service assembly and another to indicate the quantity of a given part in an illustration.

Service Assembly Reference Numbers

Parts in service assemblies have reference numbers in the form **a:b.** The **a** represents the reference number of the entire service assembly and the **b** represents a sequential number unique to each part within the service assembly.

For example, a wheel assembly might be identified by reference number **6**, the tire by **6:1**, the valve by **6:2**, and the wheel by **6:3**. When you order the assembly identified by reference number 6, you receive all parts identified by reference numbers 6:1, 6:2, and 6:3. However, you may also order any part individually.

Reference numbers of this type appear in illustrations and in part lists.

Reference Numbers Indicating Quantity

In an illustration, if a reference number indicates more than one part, the reference number has the form **nX y.** The **n** represents the quantity of the part, the **X** is the multiplication symbol, and the **y** represents the reference number.

For example, in an illustration, the reference number **2X 37** means that two of the parts identified by reference number 37 are indicated.

© The TORO Company — 2002
All Rights Reserved

Contents

Description	Page
Frame, Rear Axle Mount and Bumper Assembly	4
Manifold Assembly No. 100–3054	5
Rear 4WD Axle and Tire Assembly	6
Motor Assembly No. 104–0764	7
Hydraulic Cylinder Assembly	8
Planetary, Brake and Tire Assembly	9
Planetary Assembly No. 104–0722–03	11
RH Brake Assembly No. 100–3069	12
Motor Assembly No. 100–3052	13
Manifold Assembly No. 106–2039	14
LH Brake Assembly No. 100–3070	15
PTO Manifold Assembly No. 100–3055	16
PTO Manifold Assembly No. 105–4562	17
Steering Tower Assembly	20
Steering Valve Assembly No. 104–2213	22
Traction Pedal and Linkage Assembly	23
Brake Pedal and Linkage Assembly	24
Control Console and Tool Box Assembly	25
Control Console Assembly	26
Control Valve Assembly No. 105–4563	28
Fuel Tank, Battery and Roll Over Protection System (ROPS) Assembly	30
Front Deck Lift Arm and Cylinder Assembly	31
Hydraulic Cylinder Assembly No. 100–3016	33
Motor Assembly No. 99–5489	34
Side Deck Lift Arm, Cylinder and Latch Assembly	35
Hydraulic Cylinder Assembly No. 99–5496	36
Side Deck Lift Arm and Damper Assembly	37
Hood and Screen Assembly	39
Air Cleaner and Muffler Assembly	40
Air Cleaner Assembly No. 99–5410	41
Filter Assembly No. 98–9305	42
Radiator, Oil Cooler and Support Assembly	43
Engine and Mount Assembly	44
Fan Drive and Flywheel Assembly	45
Hydraulic Reservoir and Filter Assembly	46
Filter Manifold Assembly No. 100–5558	47
Pump Installation and Filter Assembly	48
Pump Assembly No. 105–4566	50
Manual Servo Control Assembly No. 93–6306	51
Gear Pump Assembly No. 100–3051	52
Gear Pump Assembly No. 100–3051	53
Piston Pump Assembly No. 105–4567	54
Piston Pump Assembly No. 105–4567	55
Traction Manifold Assembly No. 105–4516	56
Traction Hydraulic Plumbing Assembly	57
PTO Hydraulic Plumbing Assembly	58
Lift Arm Hydraulic Plumbing Assembly	59
Steering Hydraulic Plumbing Assembly	60
Rear Axle Assembly No. 100–3784 Bevel Pinion Shaft Assembly	61
Rear Axle Assembly No. 100–3784 (Continued) Differential Assembly	62
Rear Axle Assembly No. 100–3784 (Continued) Axle Support Assembly	63
Rear Axle Assembly No. 100–3784 (Continued) Bevel Gear Case Assembly	64
Rear Axle Assembly No. 100–3784 (Continued) Bevel Gear Shaft Assembly	65
Rear Axle Assembly No. 100–3784 (Continued) Axle Case Assembly	66
Rear Axle Assembly No. 100–3784 (Continued) Axle Assembly	67
Front Deck, Idler and Skid Assembly	68
Spindle Assembly No. 104–3530 (Front Deck)	69
Spindle Assembly No. 104–3531 (Front Deck)	70
Castor Arm and Tire Assembly (Front Deck)	71
Spindle Assembly (Front Deck)	72
Rear Discharge Chamber and Cover Assembly (Front Deck)	73
RH Deck, Idler and Skid Assembly	74
Spindle Assembly No. 104–3532 (RH and LH Deck)	75
Castor Arm and Tire Assembly (RH and LH Deck)	76
Spindle Assembly (RH and LH Deck)	77
Rear Discharge Chamber and Cover Assembly (RH Deck)	78
LH Deck, Idler and Skid Assembly	79
Rear Discharge Chamber and Cover Assembly (LH Deck)	80
Electrical Schematic	81
Hydraulic Schematic	82
Crankcase Assembly	83
Oil Pan Assembly	84
Cylinder Head Assembly	85
Gear Case Assembly	86
Head Cover Assembly	87
Oil Filter Assembly	88
Dipstick and Guide Assembly	89
Oil Pump Assembly	90
Breather Assembly	91
Main Bearing Case	92
Camshaft and Idler Gear Shaft Assembly	93
Piston and Crankshaft Assembly	94
Flywheel Assembly	95
Fuel Camshaft and Governor Shaft Assembly	96
Engine Stop Lever Assembly	97
Injection Pump Assembly	98
Injection Pump Component Parts Assembly	99
Governor Assembly	100
Speed Control Plate Assembly	101
Nozzle Holder and Glow Plug Assembly	102

Contents (Continued)

Description	Page
Fuel Filter and Fuel Pump	103
Alternator and Pulley Assembly	104
Alternator Component Parts Assembly	105
Starter Assembly	106
Starter Component Parts Assembly	107
Oil Switch / Thermometer and Plug Assembly	108
Water Flange and Thermostat Assembly	109
Water Pump Assembly	110
Water Pipe Assembly	111
Fan Assembly	112
Valve and Rocker Arm Assembly	113
Inlet Manifold Assembly	114
Exhaust Manifold Assembly	115
Turbo Charger Assembly	116
Oil Pipe (Turbo Charger) Assembly	117
Oil Cooler Assembly	118
Muffler Gasket and Glow Controller	119
Label and Operators Manual	120
Gasket Kit	121

Accessories

Description	Model / Part No.
Guardian Recycler Conversion Kit	30420
Speed Control Kit	30421
Center Cutting Unit	30417
Left Cutting	30416
Right Cutting	30415
Seat Kit	30398
Armrest Kit	30707
Deluxe Grammer Seat Suspension	30396
Road Light Kit	30428
Air Condidtioner Mounting Kit	30427
Rotary Broom	30426
Debris Blower	30425
Test Box – Switch	105–2811

Part Description Abbreviations

Part descriptions in this catalog may include the following abbreviations.

Abbreviation	Meaning
AR	as required
ASM	assembly
CARR	carriage
DEG	degrees
FH	flat head
GA	gauge
HF	hex flange
HH	hex head
HHF	hex head flange
HLH	hex lag head
HJ	hex jam
HOC	height-of-cut
HS	hex socket
HSBH	hex socket button head
HSFH	hex socket flat head
HSH	hex socket head
HWH	hex washer head
HWHTF	hex washer head thread forming
HYD	hydraulic
INC	incorporated
LH	left hand
NI	nylon insert
PPH	Phillips pan head
PTH	Phillips truss head
PTO	power take off
RH	right hand
SFH	slotted fillister head
SHH	slotted hex head
SQH	square head
SHWH	slotted hex washer head
SPH	slotted pan head
SRH	slotted round head
STD	standard
TAP	self tapping
TTH	Torx truss head
WH	wing head

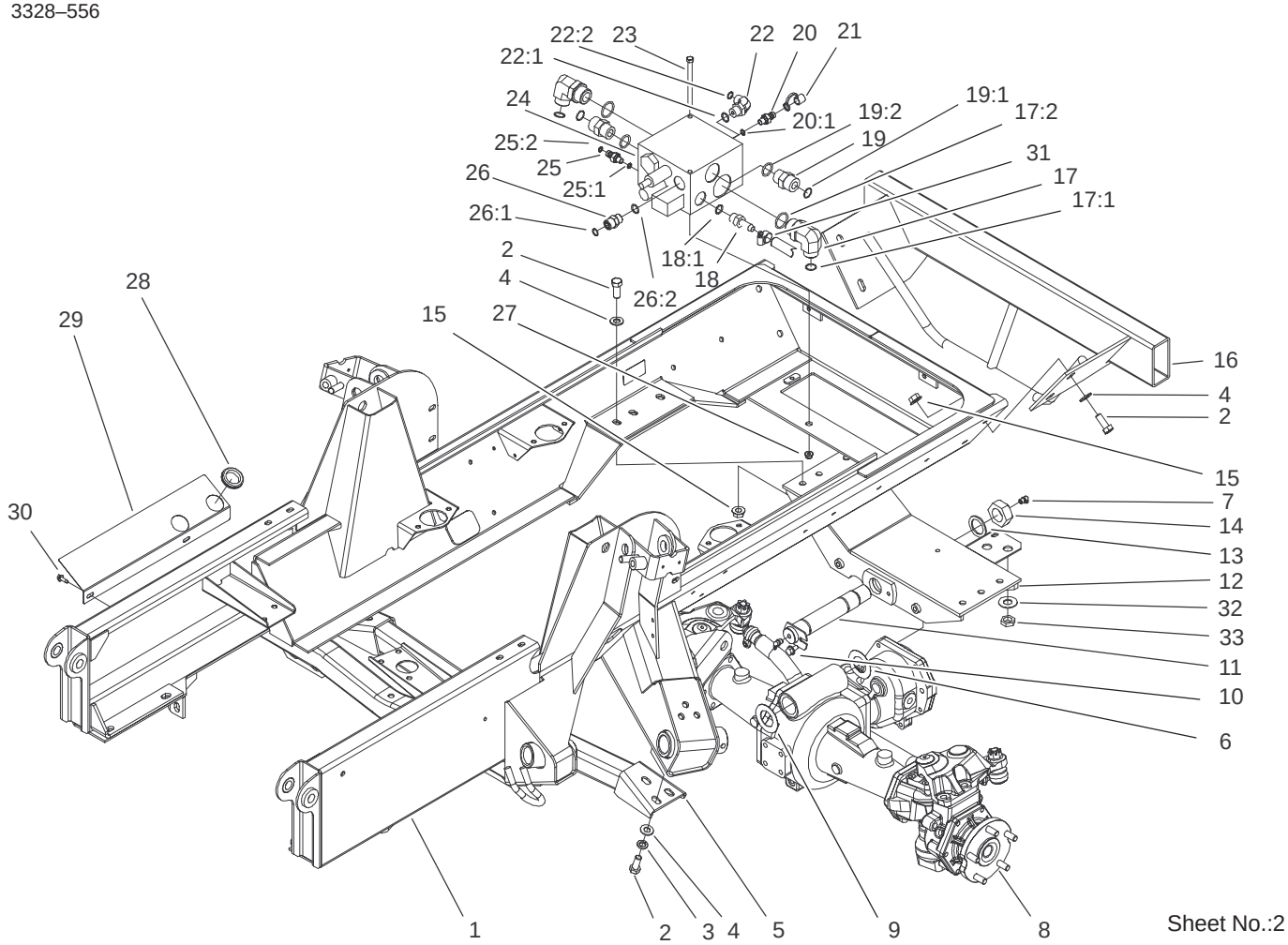

Frame, Rear Axle Mount and Bumper Assembly

Ref. No.	Part No.	Qty.	Description
1	99–5450–03	1	Frame ASM
2	325–5	16	Screw–HH
3	3253–7	6	Washer–Lock
4	3256–26	16	Washer–Flat
5	100–8100–03	1	Support Frame ASM
6	99–8432	1	Washer–Thrust
7	302–33	2	Fitting–Grease
8	100–3784	1	Drive Axle ASM
9	99–8431	1	Washer–Thrust
10	32144–14	1	Screw–HWH
11	98–7077	1	Pin–Axle, Rear
12	100–3126–03	1	Rear Mount ASM
13	92–1765	1	Washer–Thrust
14	3296–68	1	Nut–Lock, NI
15	32128–23	10	Nut–HF
16	104–7505–03	1	Bumper ASM
17	340–15	2	Fitting–HYD, 90°
17:1	237–58	1	O–Ring
17:2	237–146	1	O–Ring
18	354–121	1	Fitting–HYD, Straight
18:1	237–79	1	O–Ring
19	340–9	2	Fitting–Straight
19:1	237–58	1	O–Ring
19:2	237–81	1	O–Ring
20	354–77	1	Fitting–Quick
20:1	237–78	1	O–Ring

Ref. No.	Part No.	Qty.	Description
21	354–79	1	Cap–Dust, Yellow
22	340–98	1	Fitting–HYD, 90°
22:1	237–79	1	O–Ring
22:2	237–30	1	O–Ring
23	322–29	2	Screw–HH
24	100–3054	1	Manifold–4wd
25	340–92	1	Fitting–HYD, Straight
25:1	237–78	1	O–Ring
25:2	237–21	1	O–Ring
26	340–4	1	Adapter
26:1	237–30	1	O–Ring
26:2	237–79	1	O–Ring
27	104–8300	2	Nut–Flange, NI
28	240–3	2	Grommet–Rubber
29	104–3562–03	1	Shield–Splash
30	32104–95	2	Screw–HWH
31	2412–36	1	Clamp–Hose
32	69–8940	2	Washer
33	340–70	2	Nut–Lock

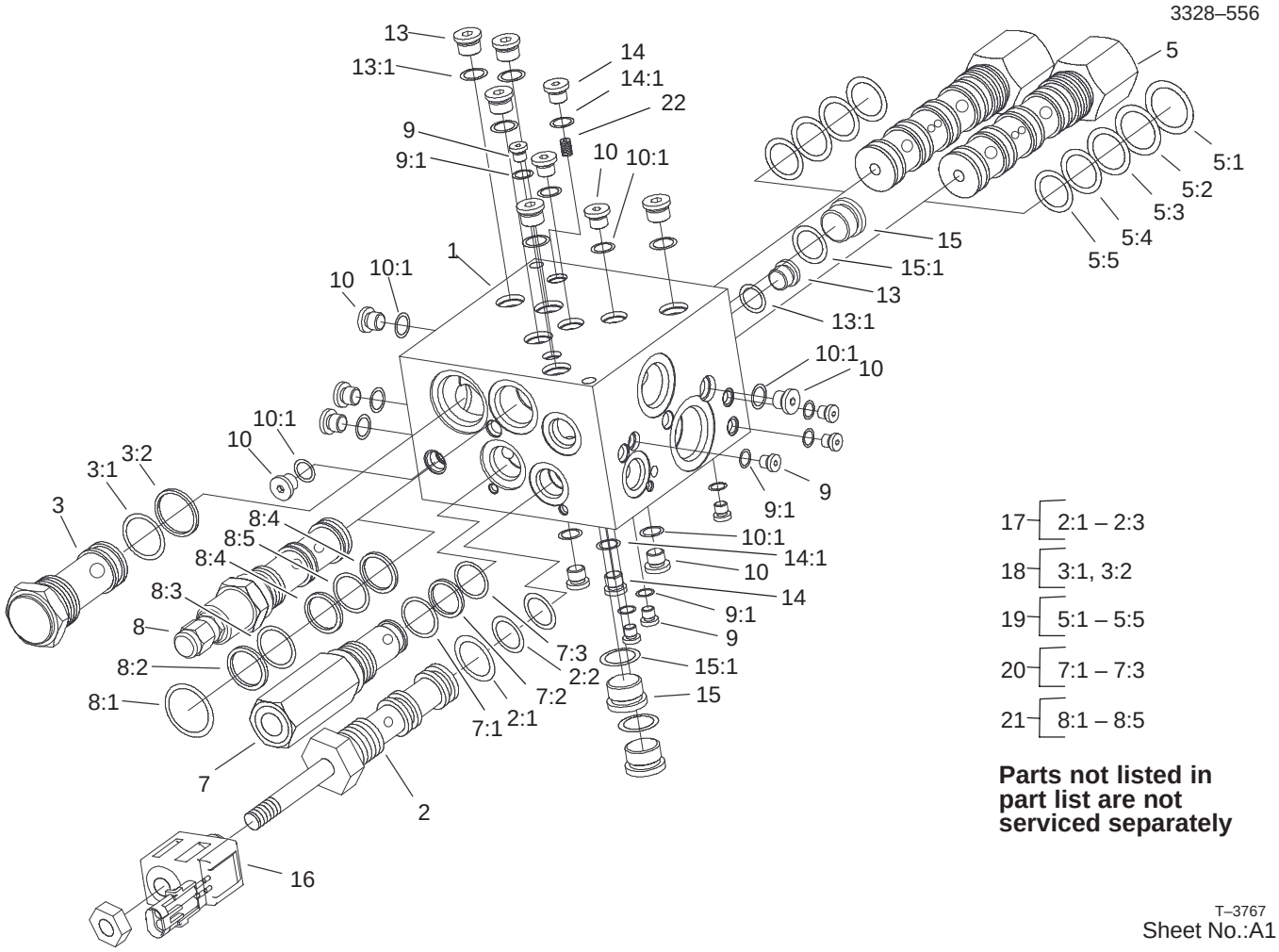

Manifold Assembly No. 100–3054

Ref. No.	Part No.	Qty.	Description
☆1		1	Manifold
2	104–8603	1	Valve–Solenoid
2:1	99–5505	1	Seal Kit
3	104–8604	1	Valve–Check
3:1	99–5506	1	Seal Kit
5	104–8605	2	Valve–Control
5:1	99–5507	1	Seal Kit
7	99–5508	1	Valve–Relief
8	99–5509	1	Valve–Reducing
9	353–991	7	Plug–Hex, Hollow
9:1	237–156	1	O–Ring
10	354–137	8	Plug
10:1	237–86	1	O–Ring
13	353–989	6	Plug–Hex, Hollow
13:1	237–42	1	O–Ring
14	353–990	3	Plug
14:1	237–78	1	O–Ring
15	354–70	3	Plug–Hex, Hollow
15:1	237–80	1	O–Ring
16	104–4264	1	Coil–Solenoid
17	99–5505	1	Seal Kit
18	99–5506	1	Seal Kit
19	99–5507	2	Seal Kit
20	99–5503	1	Seal Kit
21	104–4266	1	Seal Kit
22	106–6766	1	Plug–Orifice

Ref. No.	Part No.	Qty.	Description

☆ Not serviced separately

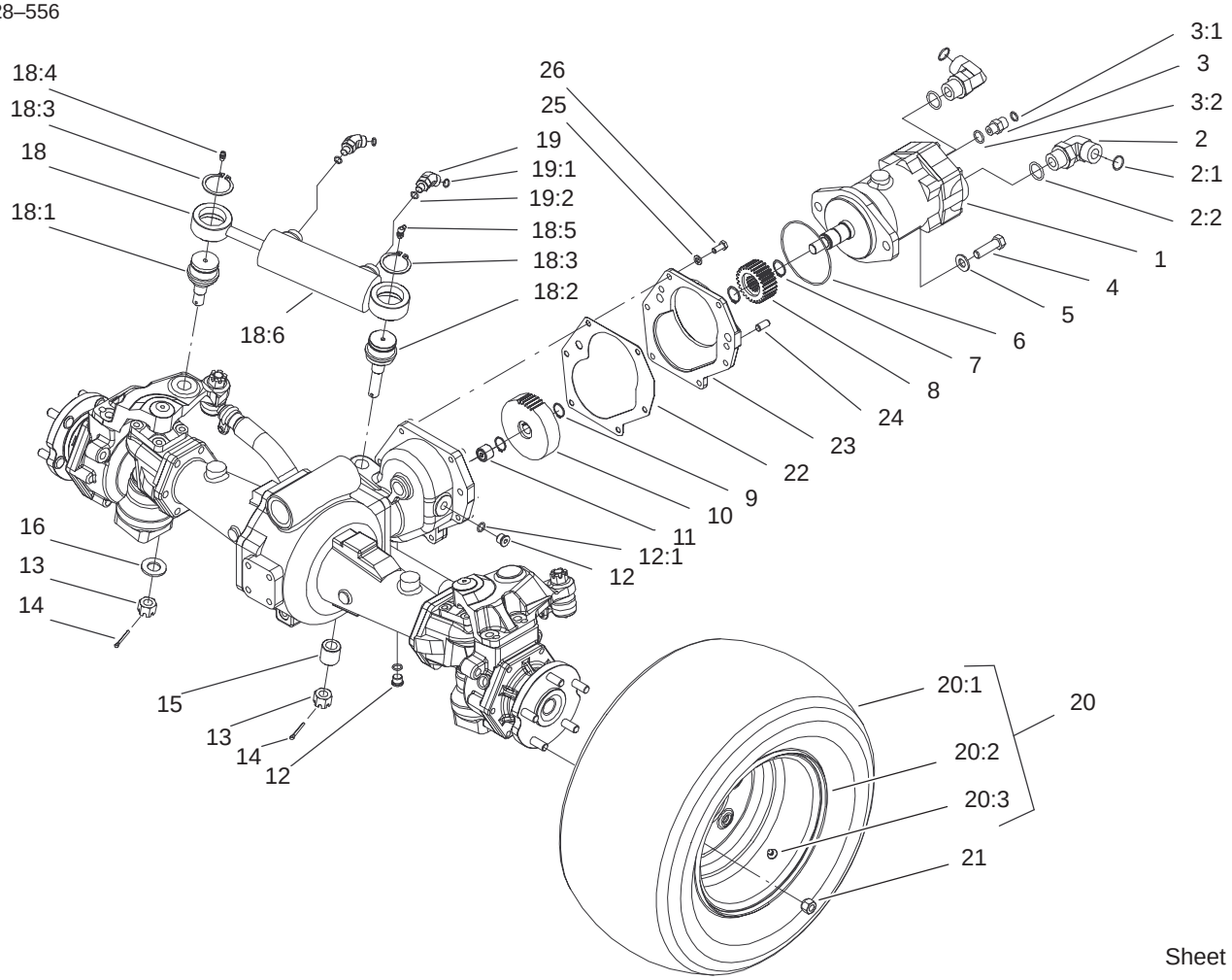

Sheet No.:3

Rear 4WD Axle and Tire Assembly

Ref. No.	Part No.	Qty.	Description
1	104–0764	1	Motor–Piston
2	340–142	2	Fitting–HYD, 90°
2:1	237–58	1	O–Ring
2:2	237–81	1	O–Ring
3	340–2	1	Fitting–HYD, Straight
3:1	237–22	1	O–Ring
3:2	237–42	1	O–Ring
4	325–7	2	Screw–HH
5	3256–26	2	Washer–Flat
6	237–166	1	O–Ring
7	32120–76	2	Ring–Snap, Ext
8	104–0755	1	Pinion–27t
9	32120–15	2	Ring–Snap, Ext
10	100–3053	1	Gear–45t
11	74–5700	1	Bearing–Needle, Roller
12	353–989	2	Plug–Hex, Hollow
12:1	237–42	1	O–Ring
13	32136–14	2	Nut–SHH
14	3272–12	2	Pin–Cotter
15	100–3796	1	Spacer–Joint, Ball
16	92–5836	1	Washer
18	105–0775	1	Steering Cylinder ASM
18:1	92–5838	1	Joint–Ball
18:2	100–3795	1	Joint–Ball
18:3	32151–104	2	Ring–Retaining, Ext

Ref. No.	Part No.	Qty.	Description
18:4	302–5	1	Fitting–Grease
18:5	302–60	1	Fitting–Grease
☆18:6		1	Cylinder–Steering
19	340–54	2	Elbow–45°
19:1	237–22	1	O–Ring
19:2	237–78	1	O–Ring
☆20		2	Wheel And Tire ASM
20:1	94–5236	1	Tire
20:2	100–2582	1	Rim
20:3	232–27	1	Stem–Valve
21	93–5268	10	Nut–Lug
22	95–7540	1	Gasket
23	95–7541	1	Plate–Cover
24	104–2353	2	Pin–Dowel
25	3253–4	6	Washer–Lock
26	33114–020	6	Screw–HH

☆ Not serviced separately

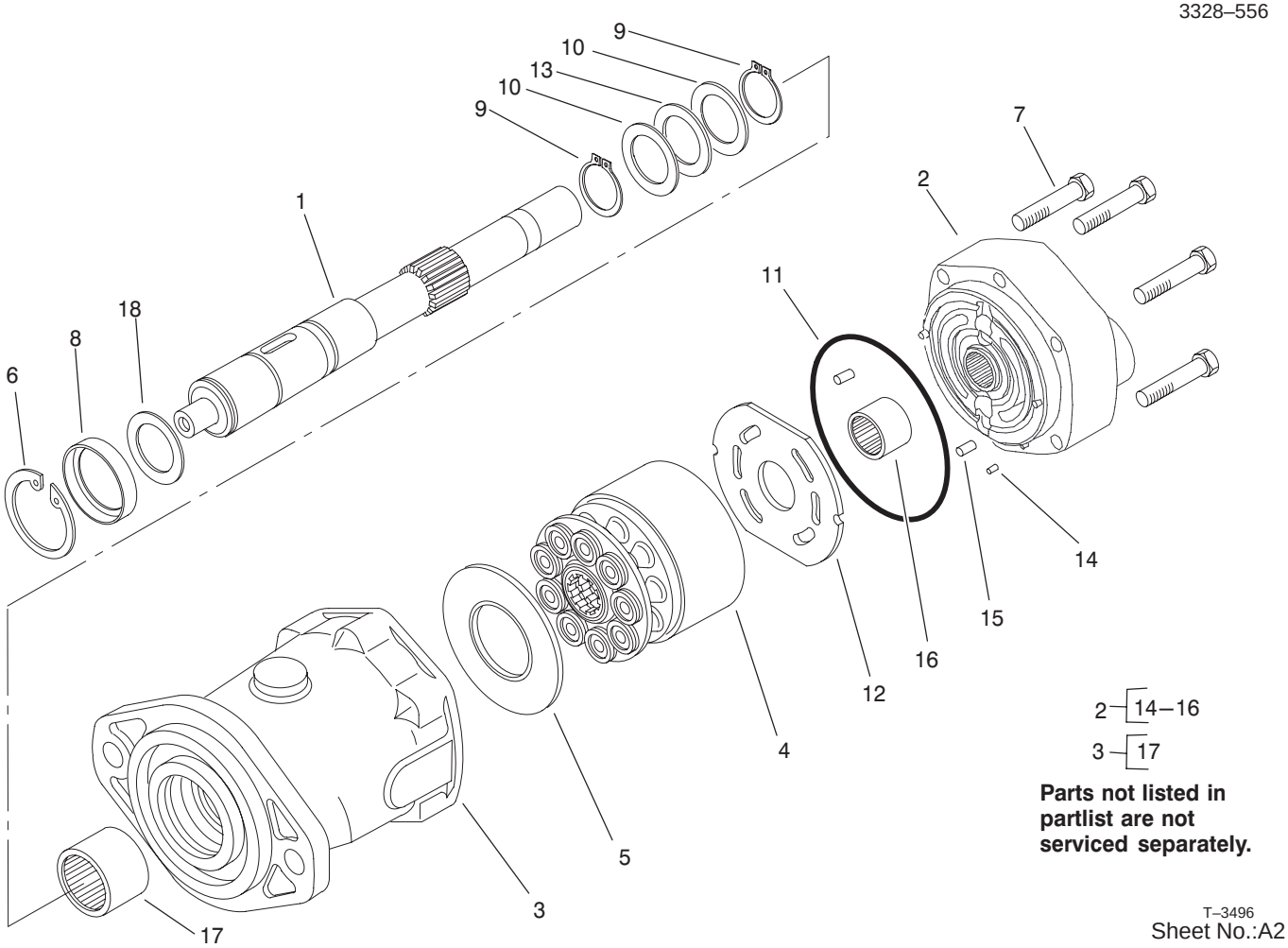

Motor Assembly No. 104–0764

Ref. No.	Part No.	Qty.	Description
1	105–2853	1	Shaft–Drive
2	105–2854	1	Backplate ASM
3	105–2855	1	Housing ASM
4	76–6910	1	Rotating Kit
5	76–6970	1	Insert–Plate, Cam
6	76–7010	1	Ring–Retaining
7	94–3002	6	Capscrew
8	105–3331	1	Seal–Shaft
9	76–7000	2	Ring–Retaining
10	76–6950	2	Race–Thrust
11	76–6980	1	O–Ring
12	94–3003	1	Plate–Valve
13	76–6960	1	Bearing–Thrust
☆14		3	Pin–Dowel
☆15		1	Pin–Dowel
☆16		1	Bearing–Needle
☆17		1	Bearing–Needle
18	60–6240	1	Washer

Ref. No.	Part No.	Qty.	Description

☆ Not serviced separately

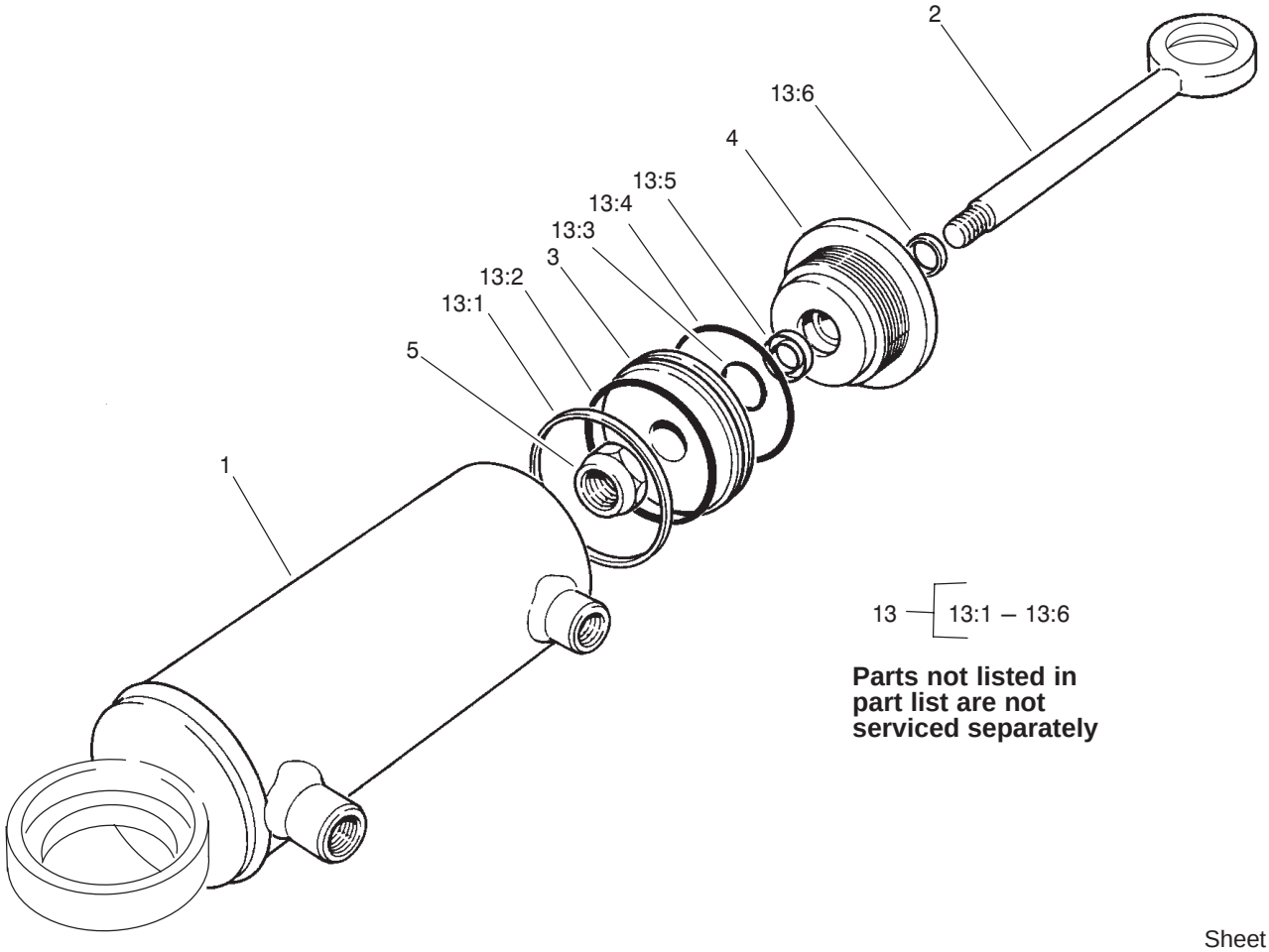

T–3527
Sheet No.:A3

Hydraulic Cylinder Assembly

Ref. No.	Part No.	Qty.	Description
3	66–1940	1	Piston
4	92–6588	1	Gland
5	66–1930	1	Locknut
13	92–6593	1	Kit–Seal
☆13:1		1	Seal
☆13:2		1	O–Ring
☆13:3		1	O–Ring
☆13:4		1	O–Ring
☆13:5		1	U–Cup
☆13:6		1	Wiper

Ref. No.	Part No.	Qty.	Description

☆ Not serviced separately

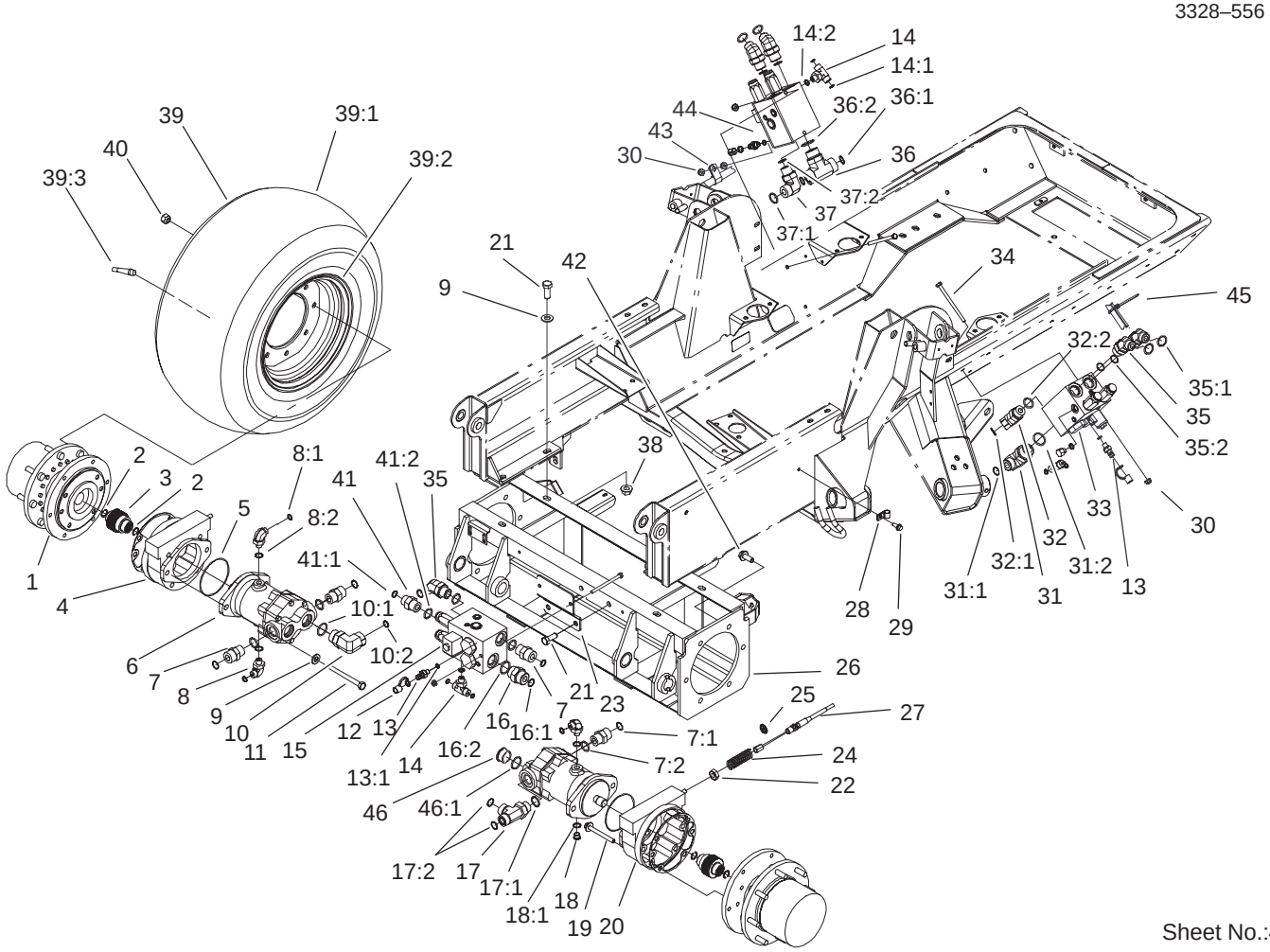

Sheet No.:4

Planetary, Brake and Tire Assembly

Ref. No.	Part No.	Qty.	Description
1	104–0722–03	2	Planetary ASM
2	93–7972	4	Ring–Retaining, Internal
3	100–3046	2	Shaft–Brake, Splined
4	100–3069	1	Brake ASM
5	237–166	2	O–Ring
6	100–3052	2	Motor–Piston
7	340–9	4	Fitting–Straight
7:1	237–58	1	O–Ring
7:2	237–81	1	O–Ring
8	340–99	3	Fitting–HYD, 90°
8:1	237–30	1	O–Ring
8:2	237–42	1	O–Ring
9	3256–26	10	Washer–Flat
10	340–129	1	Fitting–HYD, 90°
10:1	237–146	1	O–Ring
10:2	340–65	1	O–Ring
11	33116–120	4	Screw–HH
12	354–79	3	Cap–Dust, Yellow
13	354–77	3	Fitting–Quick
13:1	237–78	1	O–Ring
14	340–94	3	Adapter
14:1	237–22	2	O–Ring
14:2	237–42	1	O–Ring
15	106–2039	1	Manifold–PTO
16	340–91	1	Adapter

Ref. No.	Part No.	Qty.	Description
16:1	237–58	1	O–Ring
16:2	237–146	1	O–Ring
17	340–148	1	Fitting
17:1	237–81	1	O–Ring
17:2	237–58	2	O–Ring
18	353–989	1	Plug–Hex, Hollow
18:1	237–42	1	O–Ring
19	33106–090	8	Screw–HHF
20	100–3070	1	Brake ASM
21	325–5	8	Screw–HH
22	3218–4	2	Nut–Jam
23	104–0746–03	1	Bracket–Manifold
24	94–3088	2	Spring–Compression
25	94–3050	2	Plate–Spring
26	100–8080–03	1	Bolt–In Frame ASM
27	99–5501	2	Brake Cable ASM
28	2412–93	2	Clamp–R
29	32144–11	2	Screw–TAP
30	104–8300	7	Nut–Flange, NI
31	340–15	1	Fitting–HYD, 90°
31:1	237–58	1	O–Ring
31:2	237–146	1	O–Ring
32	100–5530	1	Fitting–45°
32:1	237–58	1	O–Ring
32:2	237–81	1	O–Ring
33	100–3055	1	Manifold–PTO

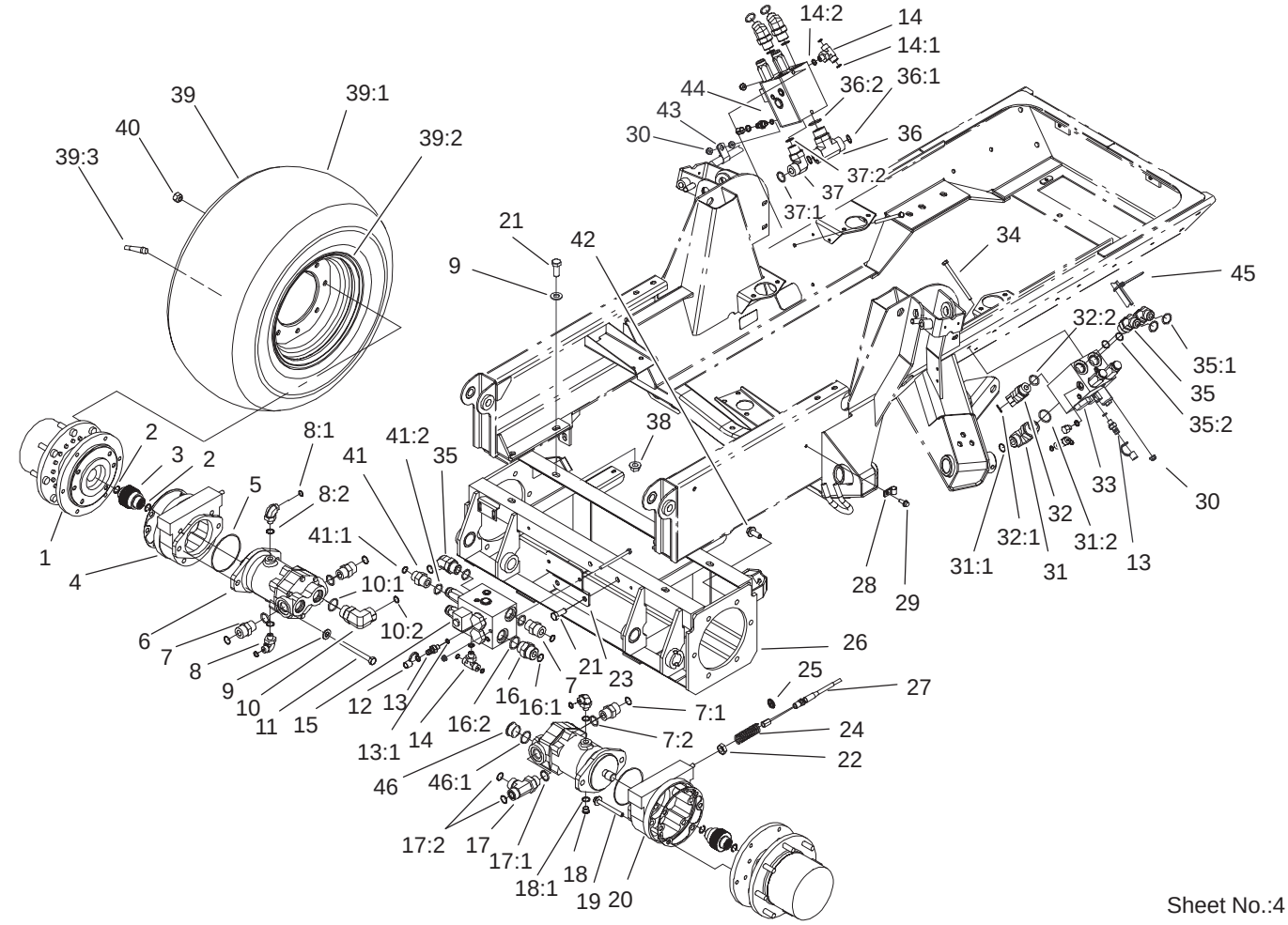

Sheet No.:4

Planetary, Brake and Tire Assembly (Continued)

Ref. No.	Part No.	Qty.	Description
34	322–38	6	Screw–HH
35	340–156	5	Fitting–HYD
35:1	237–65	1	O–Ring
35:2	237–81	1	O–Ring
36	104–7501	1	Fitting–HYD
36:1	340–65	2	O–Ring
36:2	237–146	1	O–Ring
37	340–142	1	Fitting–HYD, 90°
37:1	237–58	1	O–Ring
37:2	237–81	1	O–Ring
38	32128–23	8	Nut–HF
☆39		2	Tire & Wheel ASM
39:1	99–5434	1	Tire
39:2	99–5432	1	Rim
39:3	232–27	1	Stem–Valve
40	242–50	16	Nut–Lug
41	340–8	1	Adapter
41:1	237–65	1	O–Ring
41:2	237–81	1	O–Ring
42	33106–030	12	Screw–HHF
43	2412–81	1	Clamp
44	105–4562	1	Manifold–PTO
45	3290–378	3	Tie–Cable
46	106–2030	1	Plug, Hex Hollow
46:1	237–146	1	O–Ring

Ref. No.	Part No.	Qty.	Description

☆ Not serviced separately

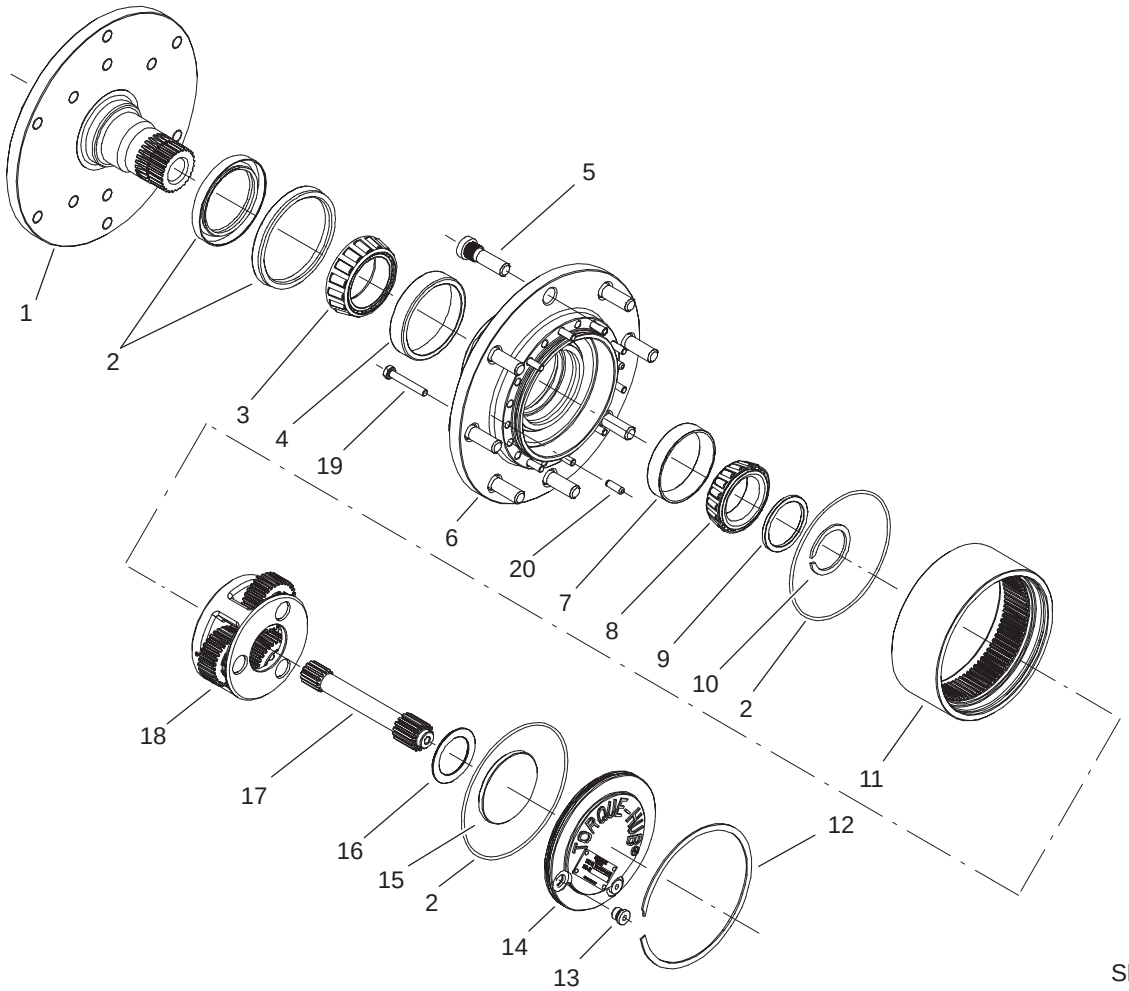

T–3758
Sheet No.:A4

Planetary Assembly No. 104–0722–03

Ref. No.	Part No.	Qty.	Description
1	93–7450	1	Spindle
2	93–7474	1	Seal Kit
3	93–7451	1	Cone–Bearing
4	93–7452	1	Cup–Bearing
5	93–7455	8	Stud–Wheel
6	93–7453	1	Housing
7	93–7470	1	Cup–Bearing
8	93–7469	1	Cone–Bearing
9	93–7468	1	Washer–Thrust
10	93–7467	1	Ring–Retaining, Ext
11	104–4285	1	Ring Gear
12	93–7462	1	Ring–Retaining, Int
13	93–7461	2	Plug–Pipe
14	93–7458	1	Plate–Cover
15	104–4287	1	Spacer–Input
16	104–4288	1	Washer–Thrust
17	104–4286	1	Shaft–Input
18	104–4289	1	Carrier ASM
19	93–7454	18	Bolt–HH
20	93–7466	2	Pin–Dowel

Ref. No.	Part No.	Qty.	Description

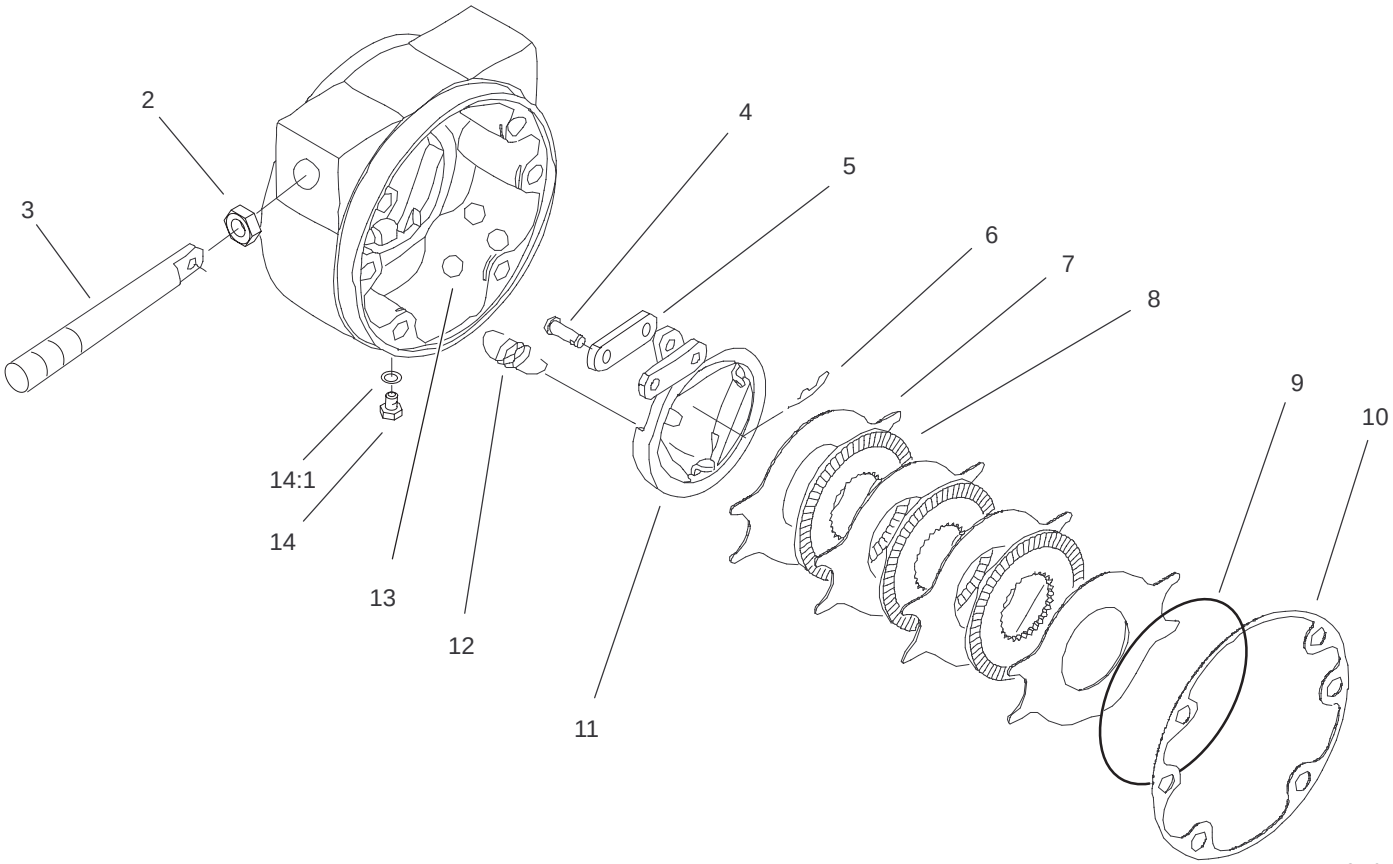

T–3759
Sheet No.:A5

RH Brake Assembly No. 100–3069

Ref. No.	Part No.	Qty.	Description
2	93–7977	1	Seal
3	93–7978	1	Rod–Pull
4	93–7983	2	Pin–Clevis
5	93–7980	2	Link
6	93–7979	2	Pin–Hitch
7	93–7986	4	Disc–Stationary
8	104–4278	3	Disc–Rotating
9	93–7976	1	Ring–Retaining
10	93–7984	1	Gasket
11	104–4280	1	Actuator–Rotating
12	93–7987	3	Spring–Extension
13	93–7985	3	Ball
14	353–990	2	Plug
14:1	237–78	1	O–Ring

Ref. No.	Part No.	Qty.	Description

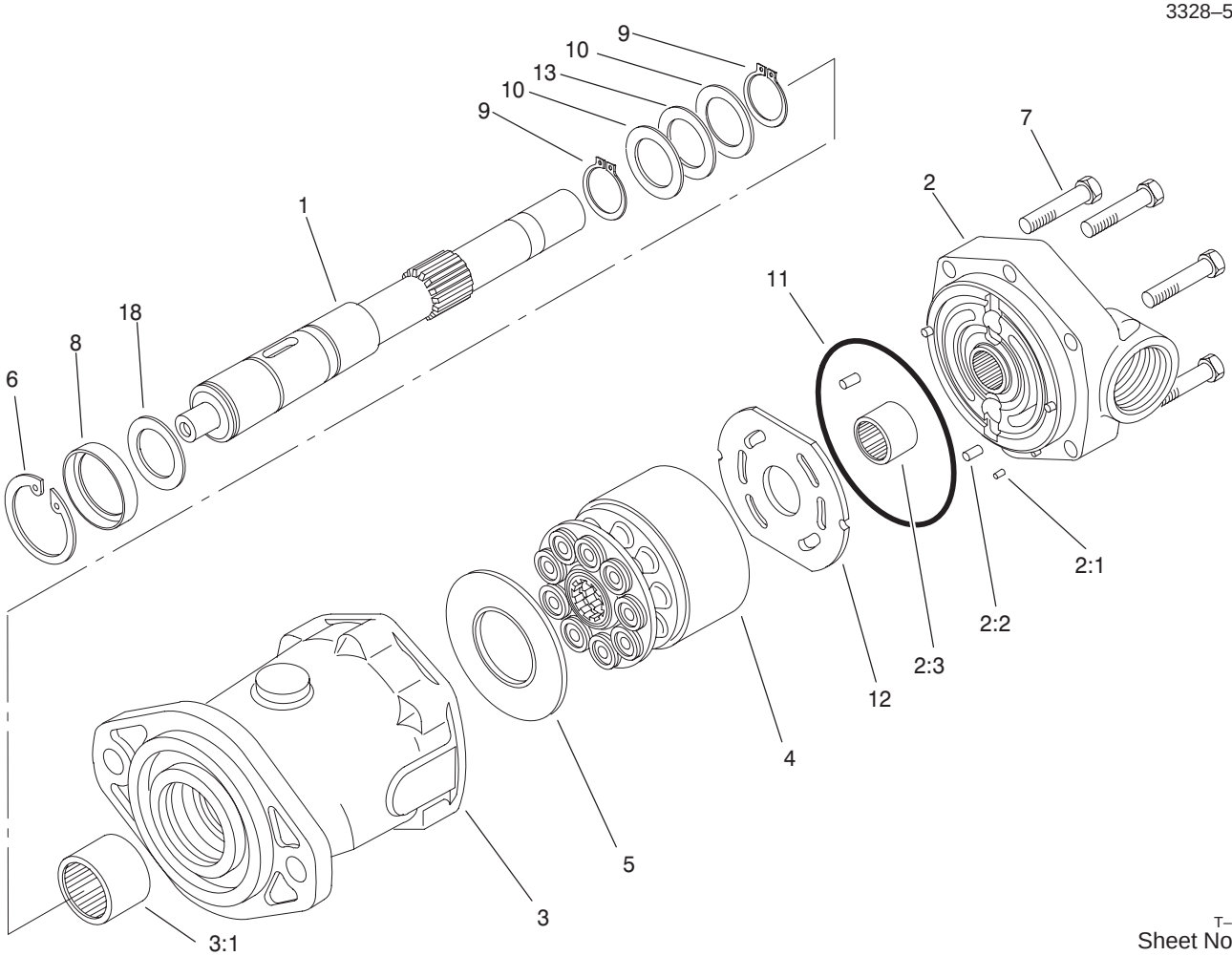

Sheet No.:A6

Motor Assembly No. 100–3052

Ref. No.	Part No.	Qty.	Description
1	94–3004	1	Shaft–Drive, Splined
2	105–2851	1	Backplate ASM
☆2:1		3	Pin–Dowel
☆2:2		1	Pin–Dowel
☆2:3		1	Bearing–Needle
3	105–2852	1	Housing ASM
☆3:1		1	Bearing–Needle
4	76–6910	1	Rotating Kit
5	76–6970	1	Insert–Plate, Cam
6	60–6260	1	Ring
7	94–3002	6	Capscrew
8	105–3331	1	Seal–Shaft
9	76–7000	2	Ring–Retaining
10	60–6160	2	Race
11	76–6980	1	O–Ring
12	94–3003	1	Plate–Valve
13	76–6960	1	Bearing–Thrust
18	60–6240	1	Washer

Ref. No.	Part No.	Qty.	Description

☆ Not serviced separately

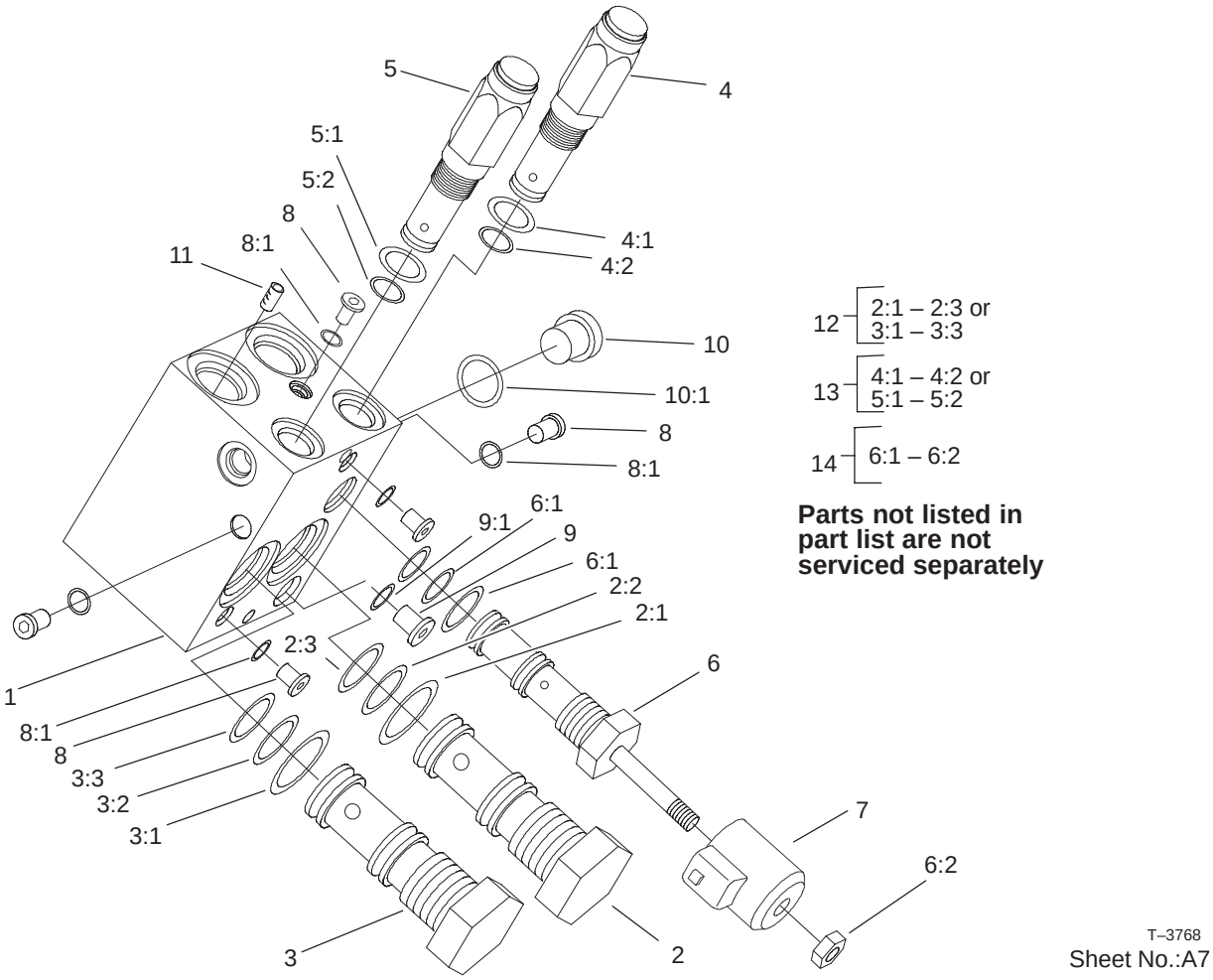

Manifold Assembly No. 106–2039

Ref. No.	Part No.	Qty.	Description
☆1		1	Body
2	104–4297	1	Cartridge–Spool Logic
3	104–4298	1	Cartridge–Spool Logic
4	95–5635	1	Valve–Relief
5	104–4273	1	Cartridge–Relief, Pilot
6	95–5638	1	Valve–Solenoid
6:1	95–5917	1	Seal Kit
6:2	3220–4	1	Nut–Jam
7	105–7340	1	Coil ASM
8	353–991	5	Plug–Hex, Hollow
8:1	237–156	1	O–Ring
9	353–990	1	Plug
9:1	237–78	1	O–Ring
10	353–988	1	Plug–Hex, Hollow
10:1	237–79	1	O–Ring
11	3246–17	1	Setscrew–HSH
12	95–5644	2	Seal Kit
13	95–5645	2	Seal Kit
14	95–5643	1	Seal Kit

Ref. No.	Part No.	Qty.	Description

☆ Not serviced separately

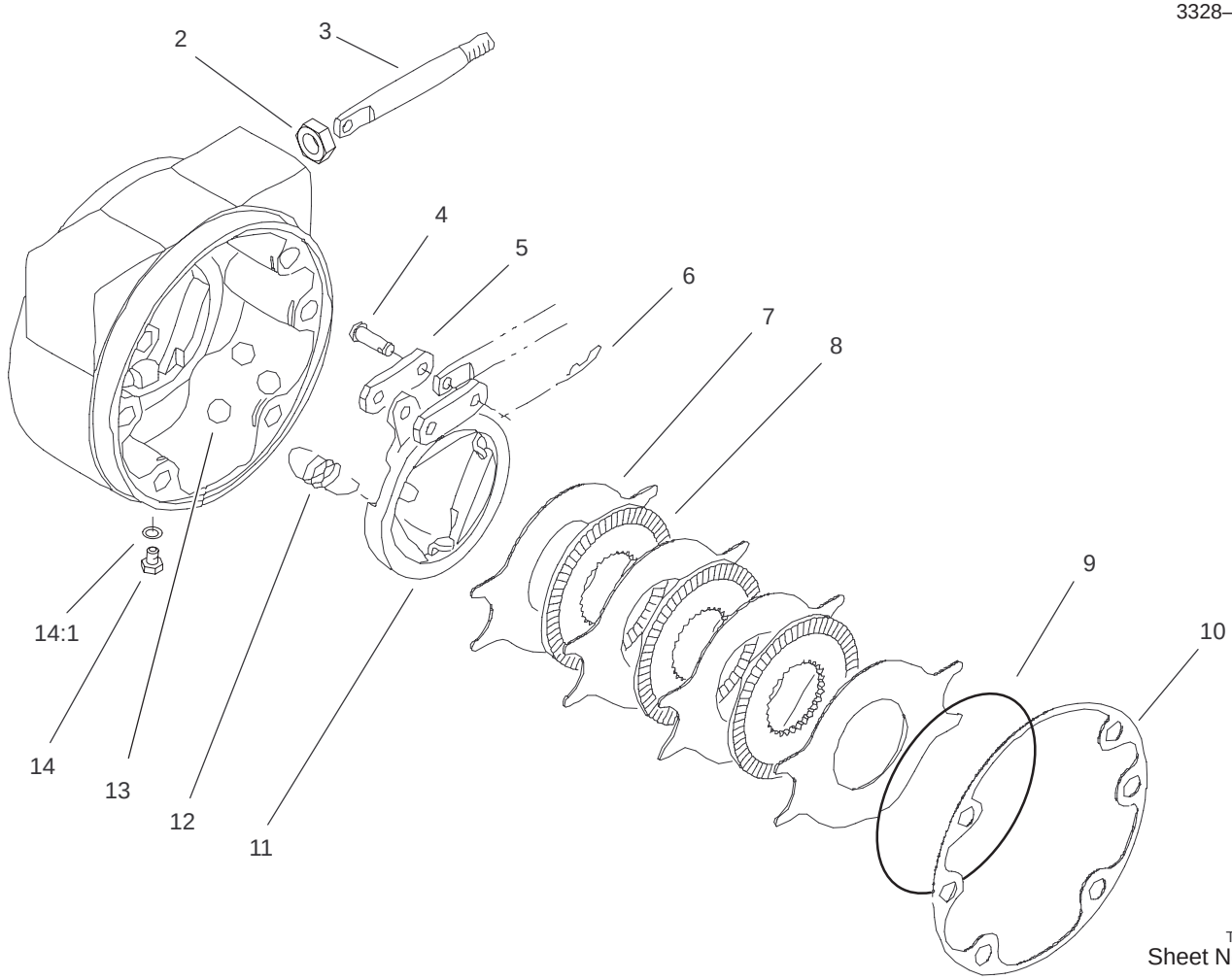

T–3760
Sheet No.:A8

LH Brake Assembly No. 100–3070

Ref. No.	Part No.	Qty.	Description
2	93–7977	1	Seal
3	93–7978	1	Rod–Pull
4	93–7983	2	Pin–Clevis
5	93–7980	2	Link
6	93–7979	2	Pin–Hitch
7	93–7986	4	Disc–Stationary
8	104–4278	3	Disc–Rotating
9	93–7976	1	Ring–Retaining
10	93–7984	1	Gasket
11	104–4279	1	Actuator–Rotating
12	93–7987	3	Spring–Extension
13	93–7985	3	Ball
14	353–990	2	Plug
14:1	237–78	1	O–Ring

Ref. No.	Part No.	Qty.	Description

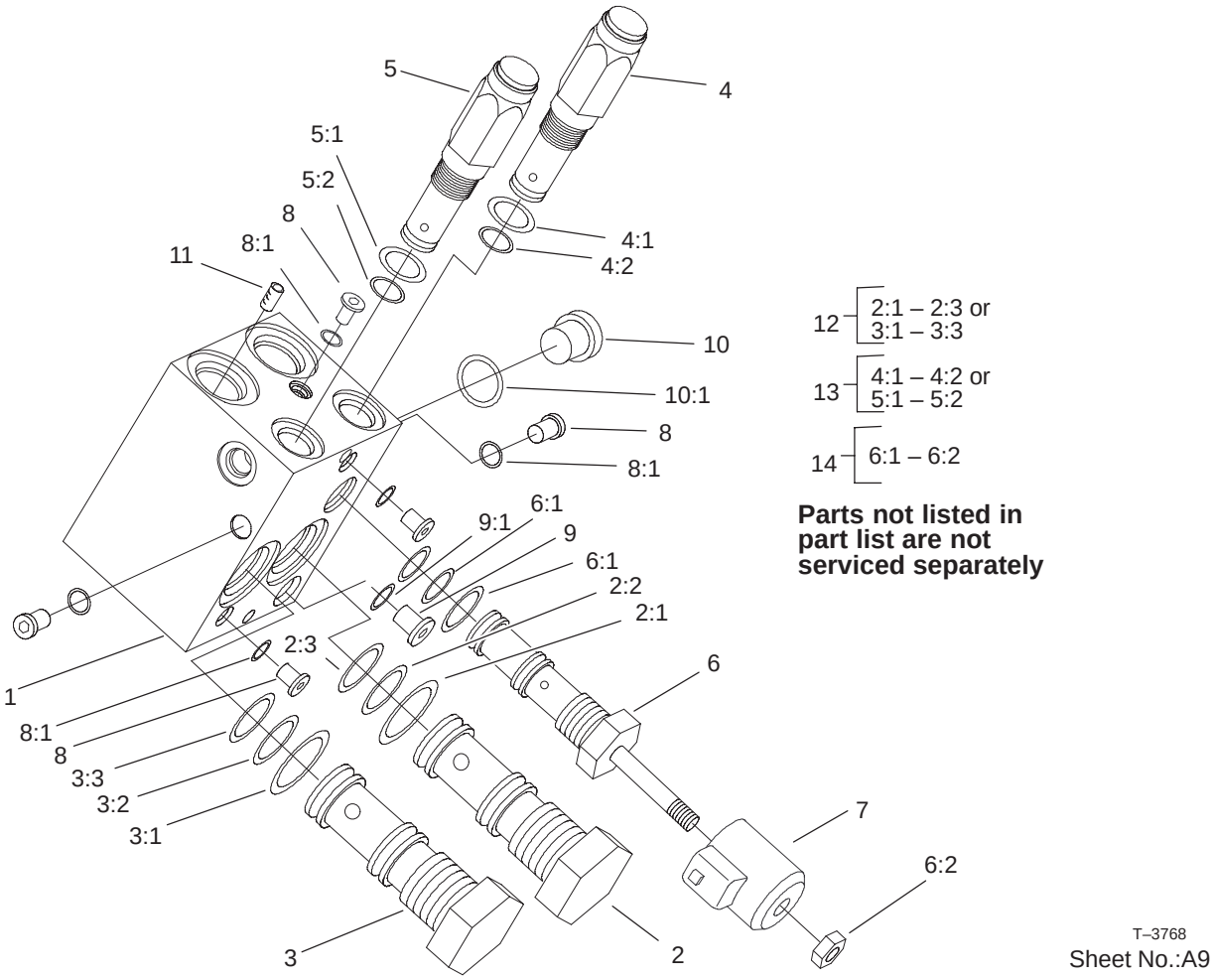

PTO Manifold Assembly No. 100–3055

Ref. No.	Part No.	Qty.	Description
☆1		1	Body
2	104–4297	1	Cartridge–Spool Logic
3	104–4298	1	Cartridge–Spool Logic
4	95–5635	1	Valve–Relief
5	104–4273	1	Cartridge–Relief, Pilot
6	95–5638	1	Valve–Solenoid
6:1	95–5917	1	Seal Kit
6:2	3220–4	1	Nut–Jam
7	105–7340	1	Coil ASM
8	353–991	5	Plug–Hex, Hollow
8:1	237–156	1	O–Ring
9	353–990	1	Plug
9:1	237–78	1	O–Ring
10	353–988	1	Plug–Hex, Hollow
10:1	237–79	1	O–Ring
11	104–4276	1	Plug–Orifice
12	95–5644	2	Seal Kit
13	95–5645	2	Seal Kit
14	95–5643	1	Seal Kit

Ref. No.	Part No.	Qty.	Description

☆ Not serviced separately

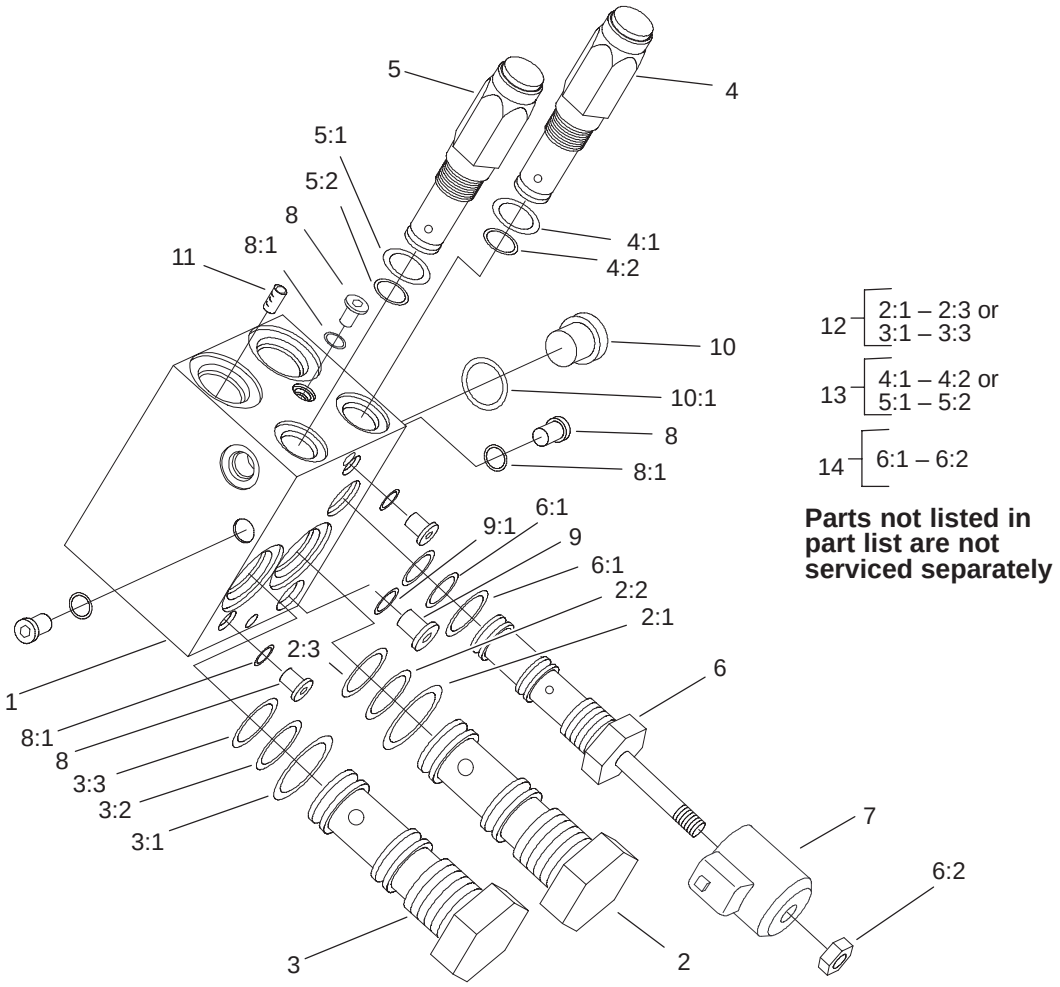

Parts not listed in part list are not serviced separately

T–3831
Sheet No.:B1

PTO Manifold Assembly No. 105–4562

Ref. No.	Part No.	Qty.	Description
☆1		1	Body
2	104–4297	1	Cartridge–Spool Logic
3	104–4298	1	Cartridge–Spool Logic
4	105–4564	1	Valve–Relief
5	104–4273	1	Cartridge–Relief, Pilot
6	95–5638	1	Valve–Solenoid
6:1	95–5917	1	Seal Kit
6:2	3220–4	1	Nut–Jam
7	105–7340	1	Coil ASM
8	353–991	5	Plug–Hex, Hollow
8:1	237–156	1	O–Ring
9	353–990	1	Plug
9:1	237–78	1	O–Ring
10	353–988	1	Plug–Hex, Hollow
10:1	237–79	1	O–Ring
11	104–4276	1	Plug–Orifice
12	95–5644	2	Seal Kit
13	95–5645	2	Seal Kit
14	95–5643	1	Seal Kit

Ref. No.	Part No.	Qty.	Description

☆ Not serviced separately

3328–556

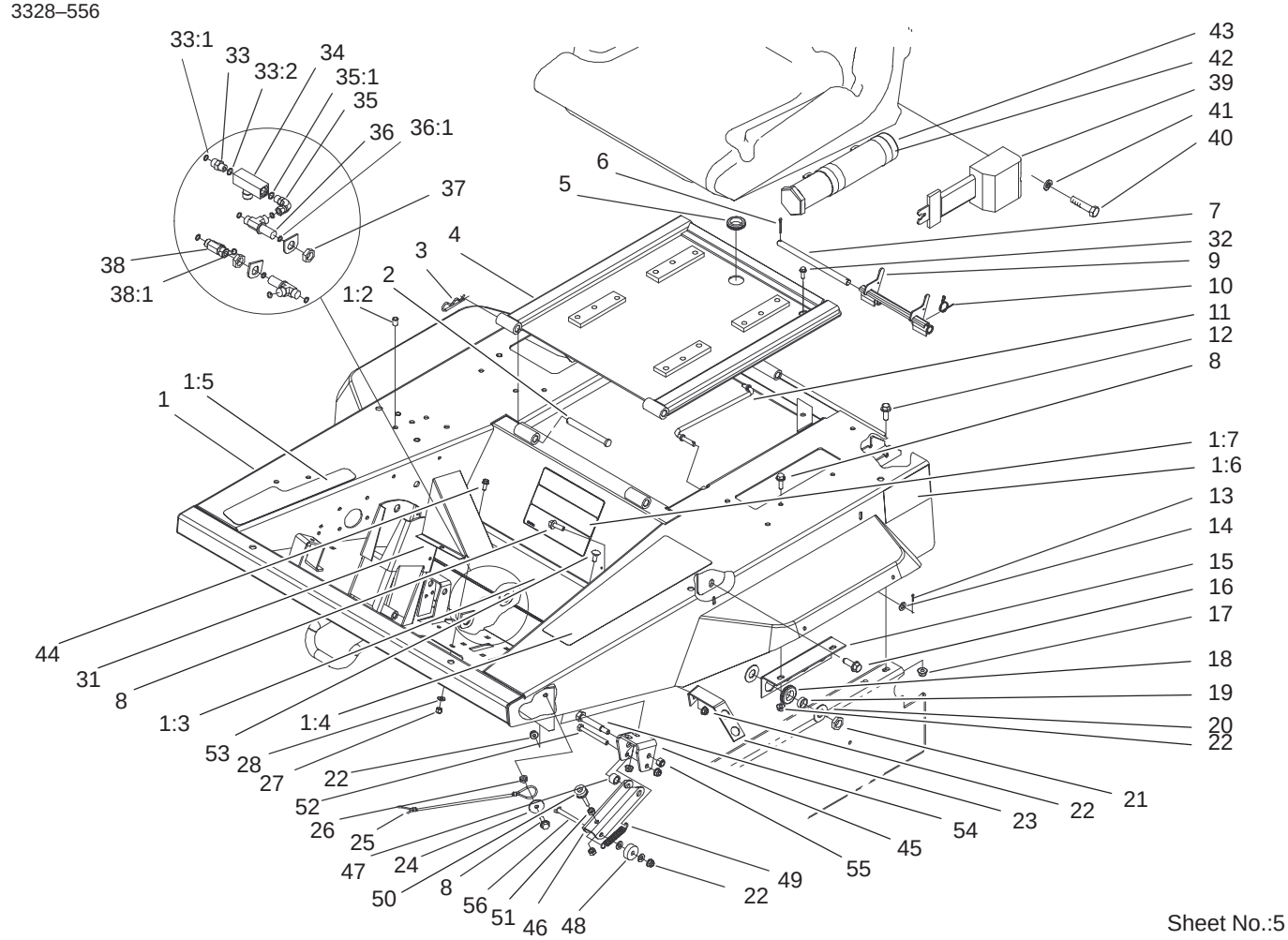

Sheet No.:5

Platform and Seat Base Assembly

Ref. No.	Part No.	Qty.	Description
1	100–3033	1	Platform ASM
1:2	32148–6	14	Insert–Nut
1:3	93–5349	2	Abrasive–Floor
1:4	93–5507	1	Abrasive–Platform
1:5	104–3599	1	Decal–Pedal, Traction
1:6	94–8099	2	Decal–4wd
1:7	106–6764	1	Decal–Operating Instruction, Ce
2	93–5343	2	Pin–Clevis
3	3290–355	2	Pin–Hair
4	100–3060–03	1	Seat Plate ASM
5	240–5	1	Grommet
6	3272–11	2	Pin–Cotter
7	93–5366	1	Shaft–Latch
8	3234–29	4	Screw–HHF
9	93–5363	1	Latch ASM
10	93–5367	1	Spring–Torsion
11	93–5338	1	Rod–Prop
12	3234–42	2	Screw–HHF
13	3272–5	2	Pin–Cotter
14	3256–23	4	Washer–Flat
15	100–3149–03	1	Bracket–Bulkhead
16	32144–67	2	Screw
17	104–8301	2	Nut–Flange, NI
18	240–4	4	Grommet–Rubber
19	69–8970	4	Spacer

Ref. No.	Part No.	Qty.	Description
20	69–8940	8	Washer
21	340–70	4	Nut–Lock
22	104–8300	8	Nut–Flange, NI
23	100–5500–03	1	Support
24	3256–57	1	Washer–Flat
25	93–9595	1	Lanyard
26	3218–3	1	Nut–Jam
27	3296–42	2	Nut–Lock, NI
28	3256–22	2	Washer–Flat
31	100–3045–01	1	Cover–Tubes
32	3234–4	1	Screw–HHF
33	340–2	1	Fitting–HYD, Straight
33:1	237–22	1	O–Ring
33:2	237–42	1	O–Ring
34	98–9742	1	Valve–Control, Flow
35	340–110	1	Fitting–Swivel,90°
35:1	237–42	1	O–Ring
36	340–68	2	Fitting–Tee, Bulkhead
36:1	237–22	3	O–Ring
37	340–70	2	Nut–Lock
38	340–115	1	Fitting–Tee
38:1	237–22	2	O–Ring
39	100–4928	1	Belt–Seat
40	3212–4	2	Screw–HH
41	3253–6	2	Washer–Lock
42	2412–133	2	R–Clamp

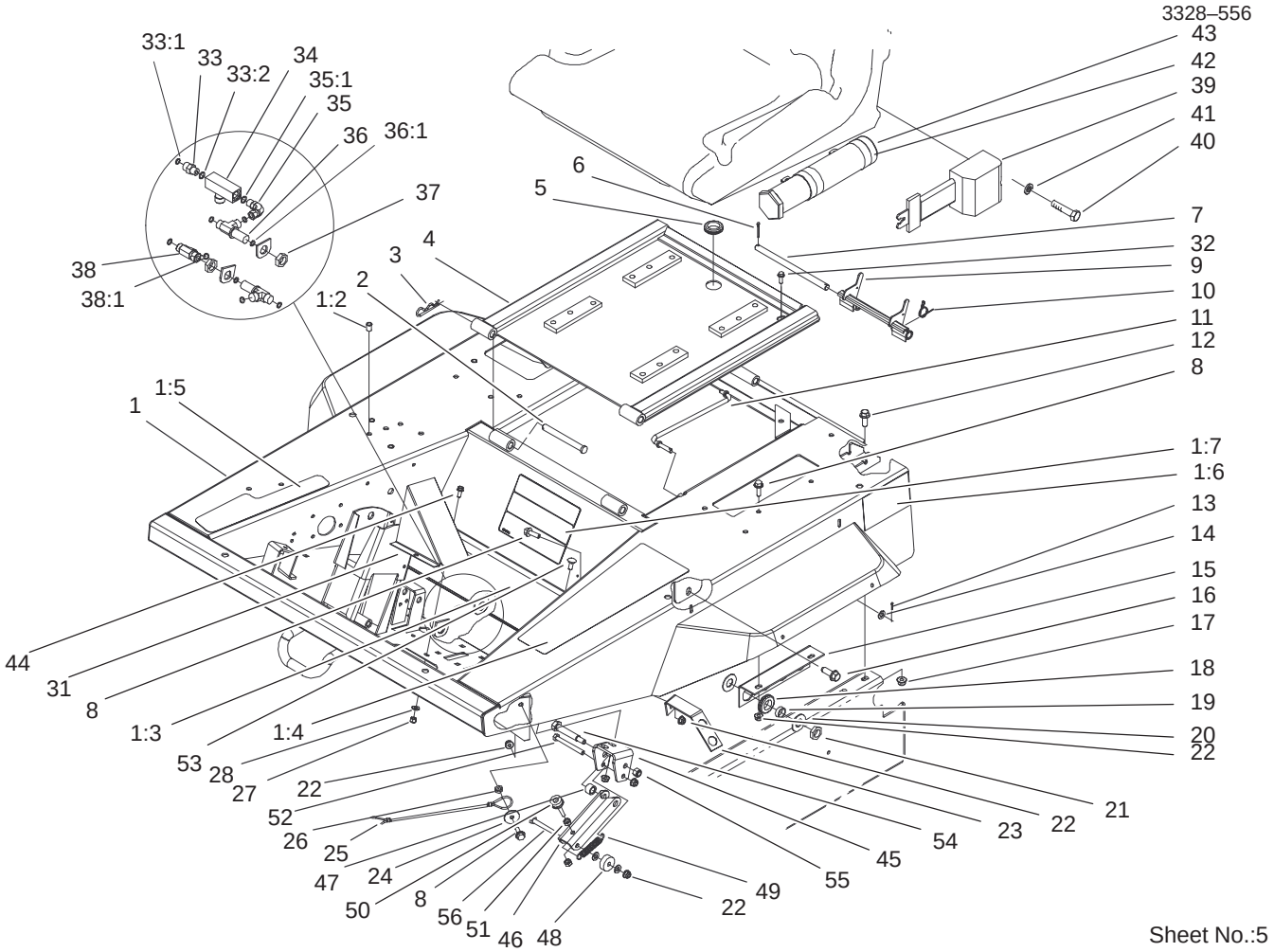

Sheet No.:5

Platform and Seat Base Assembly (Continued)

Ref. No.	Part No.	Qty.	Description
43	74–0720	1	Tube–Manual
44	3234–33	2	Screw–HHF
45	106–2031–01	1	Support–Pivot
46	106–2034–01	1	Arm–Latch
47	47–4420	1	Spacer–Adj Sleeve
48	92–2327	1	Spacer – Hose
49	92–6682	1	Spring – Extension
50	32141–36	1	Screw–Adjustment, Level
51	3217–6	2	Nut–Hex
52	322–14	1	Screw–HH
53	3230–20	2	Screw–CARR
54	71–3340	1	Wheel Bolt
55	3296–6	1	Nut–Lock, NI
56	322–12	1	Screw–HH

Ref. No.	Part No.	Qty.	Description

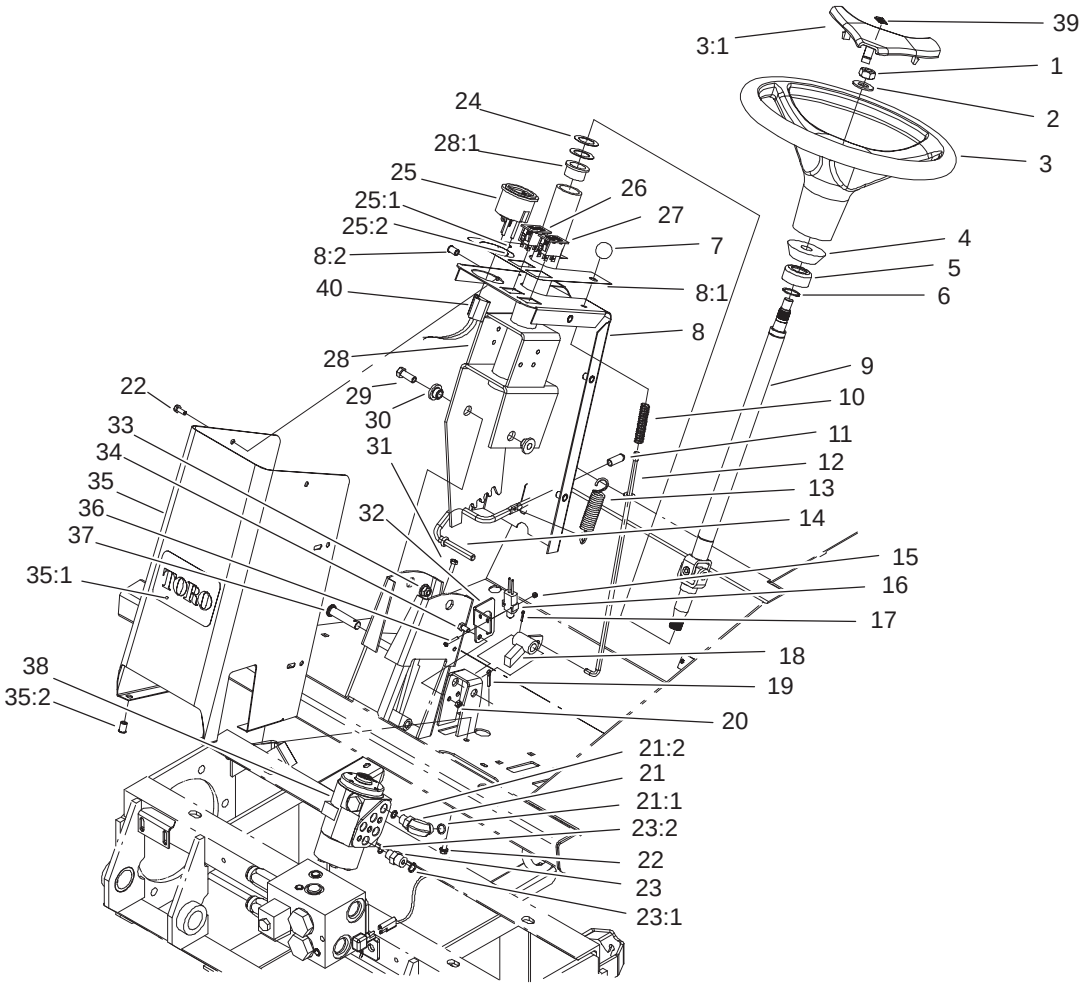

Sheet No.:6

Steering Tower Assembly

Ref. No.	Part No.	Qty.	Description
1	93–5590	1	Nut–Hex
2	3256–27	1	Washer–Flat
3	98–1471	1	Wheel–Steering
3:1	98–1468	1	Cover–Wheel, Steering
4	93–5429	1	Collar–Foam
5	93–5439	1	Seal–Steering
6	32151–29	2	Ring–Retaining
7	93–5312	1	Knob
8	104–2274	1	Tower Cover ASM
8:1	104–2277	1	Decal–Tower
8:2	32148–6	6	Insert–Nut
9	93–5428	1	Steering Shaft ASM
10	71–8310	1	Spring–Compression
11	93–5446	1	Cap–Vinyl
12	104–8308	1	Rod ASM
13	93–5985	1	Spring–Extension
14	93–5989	1	Rod–Tilt
15	3296–9	2	Nut–Lock, NI
16	99–3410	1	Switch
17	3272–5	1	Pin–Cotter
18	93–5276–03	1	Brake Pawl ASM
19	3272–10	1	Pin–Cotter
20	3296–42	2	Nut–Lock, NI
21	340–77	1	Fitting–HYD, 90°
21:1	237–22	1	O–Ring

Ref. No.	Part No.	Qty.	Description
21:2	237–42	1	O–Ring
22	3234–33	10	Screw–HHF
23	340–2	4	Fitting–HYD, Straight
23:1	237–22	1	O–Ring
23:2	237–42	1	O–Ring
24	256–260	4	Washer–Thrust
25	98–9308	1	Gauge–Temperature
25:1	3254–1	3	Washer–Lock, Internal
25:2	3217–27	3	Nut–Hex
*25:3	105–9265	1	Bulb And Lamp ASM
26	100–8070	1	Lamp–Warning
27	100–8071	1	Lamp–Warning
28	104–8332	1	Steering Column ASM
28:1	256–132	2	Bushing–Flange
29	323–6	2	Screw–HH
30	93–5988	2	Hub–Pivot
31	33103–016	4	Screw–HHF
32	104–0128	1	Bracket–Switch
33	104–8301	2	Nut–Flange, NI
34	321–3	2	Screw–HH
35	100–3038	1	Steering Tower ASM
35:1	67–1300	1	Decal–Toro Logo
35:2	32148–6	4	Insert–Nut
36	3250–35	2	Screw–PPH
37	283–5	1	Pin–Clevis
38	104–2213	1	Valve–Steering

* Not illustrated

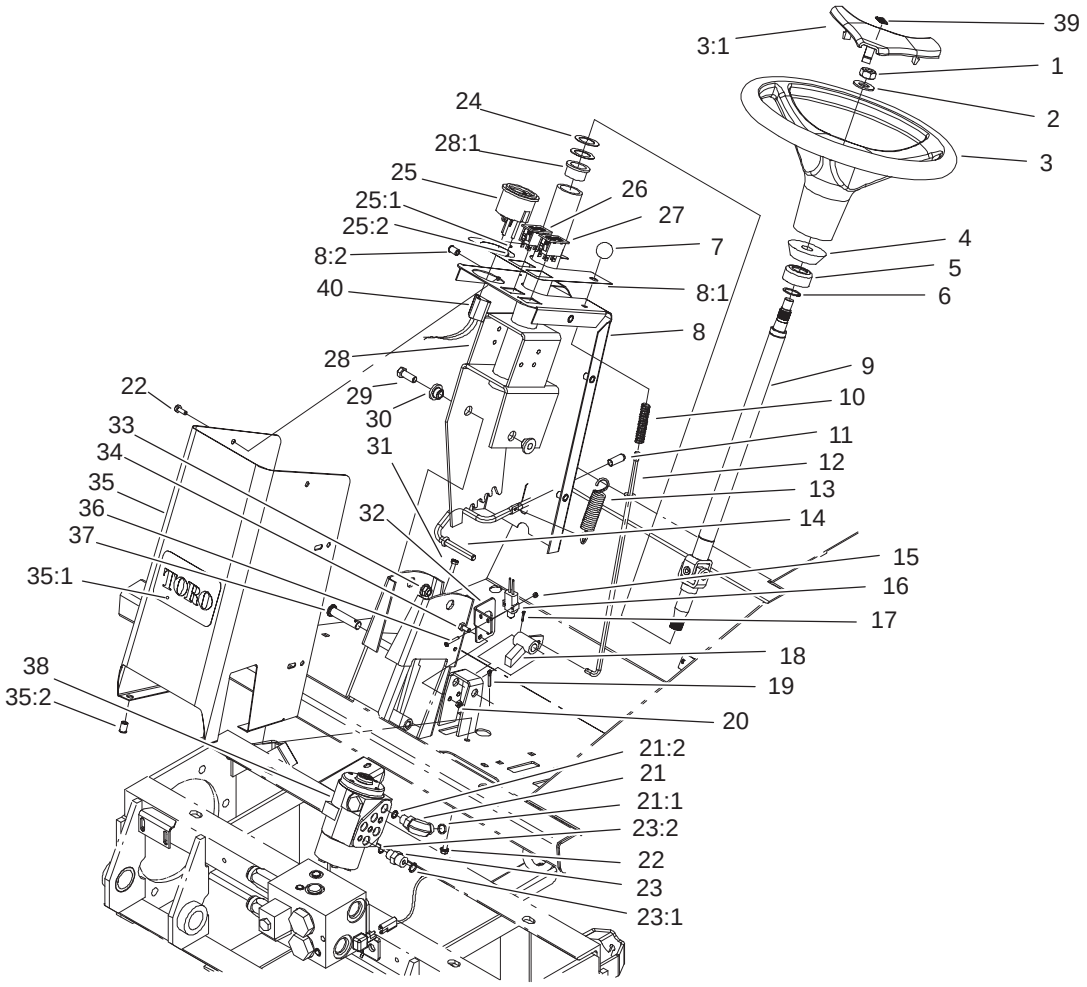

Sheet No.:6

Steering Tower Assembly (Continued)

Ref. No.	Part No.	Qty.	Description
39	98–1459	1	Decal–Toro
40	106–6763	1	Harness–Wire, Front

Ref. No.	Part No.	Qty.	Description

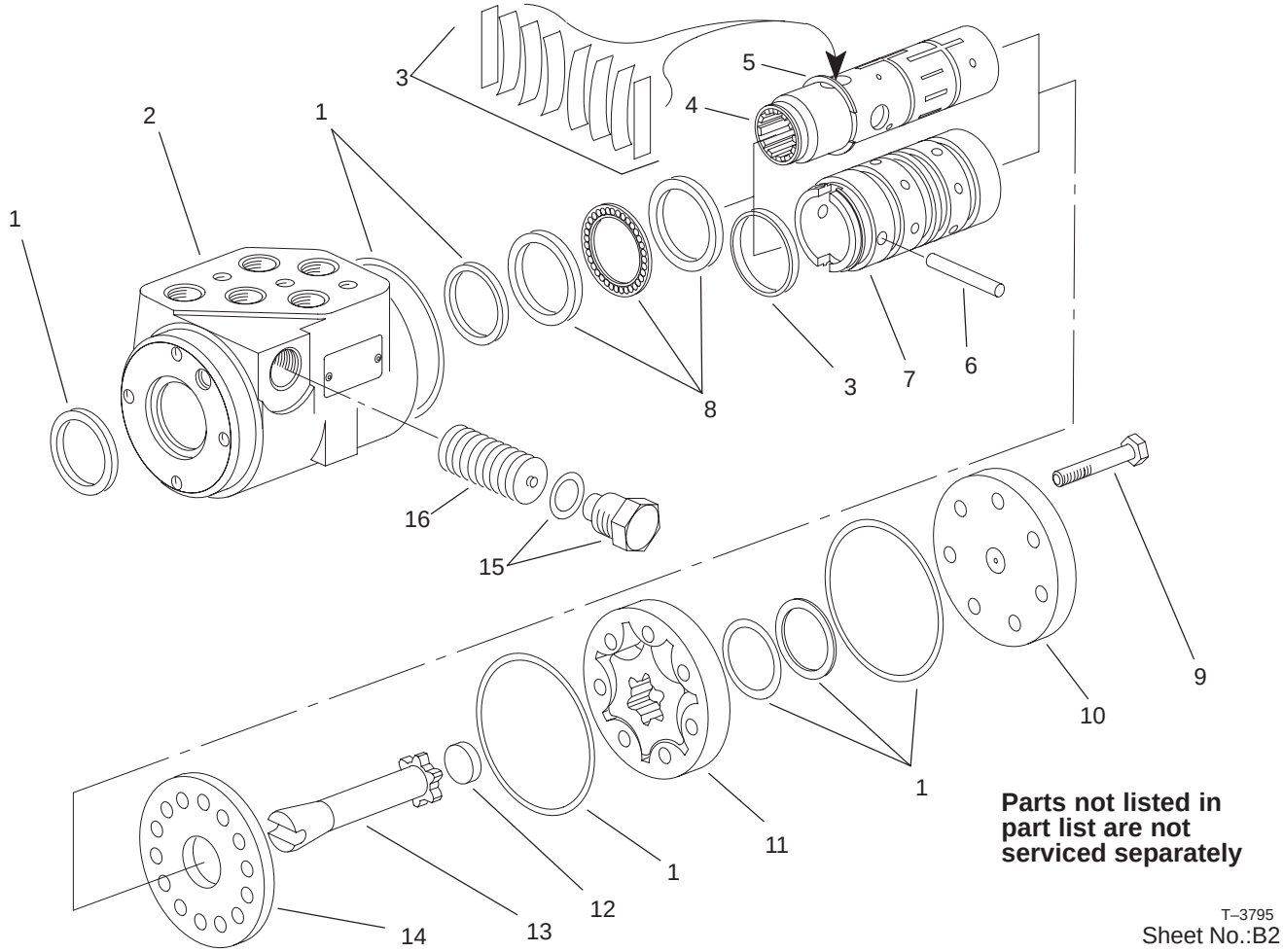

Steering Valve Assembly No. 104–2213

Ref. No.	Part No.	Qty.	Description
1	94–4099	1	Seal Kit
☆2		1	Housing
3	94–4095	1	Centering Spring Kit
☆4		1	Spool
5	94–4098	1	Ring–Retaining
6	94–4094	1	Pin
☆7		1	Sleeve
8	94–4096	1	Bearing Kit
9	94–4088	7	Screw–Cap
10	94–4089	1	Cap–End
11	94–4090	1	Gerotor
12	94–4091	1	Spacer
13	94–4093	1	Drive
14	94–4092	1	Plate–Wear
15	99–5511	1	Plug ASM
16	99–5500	1	Valve–Relief

Ref. No.	Part No.	Qty.	Description

☆ Not serviced separately

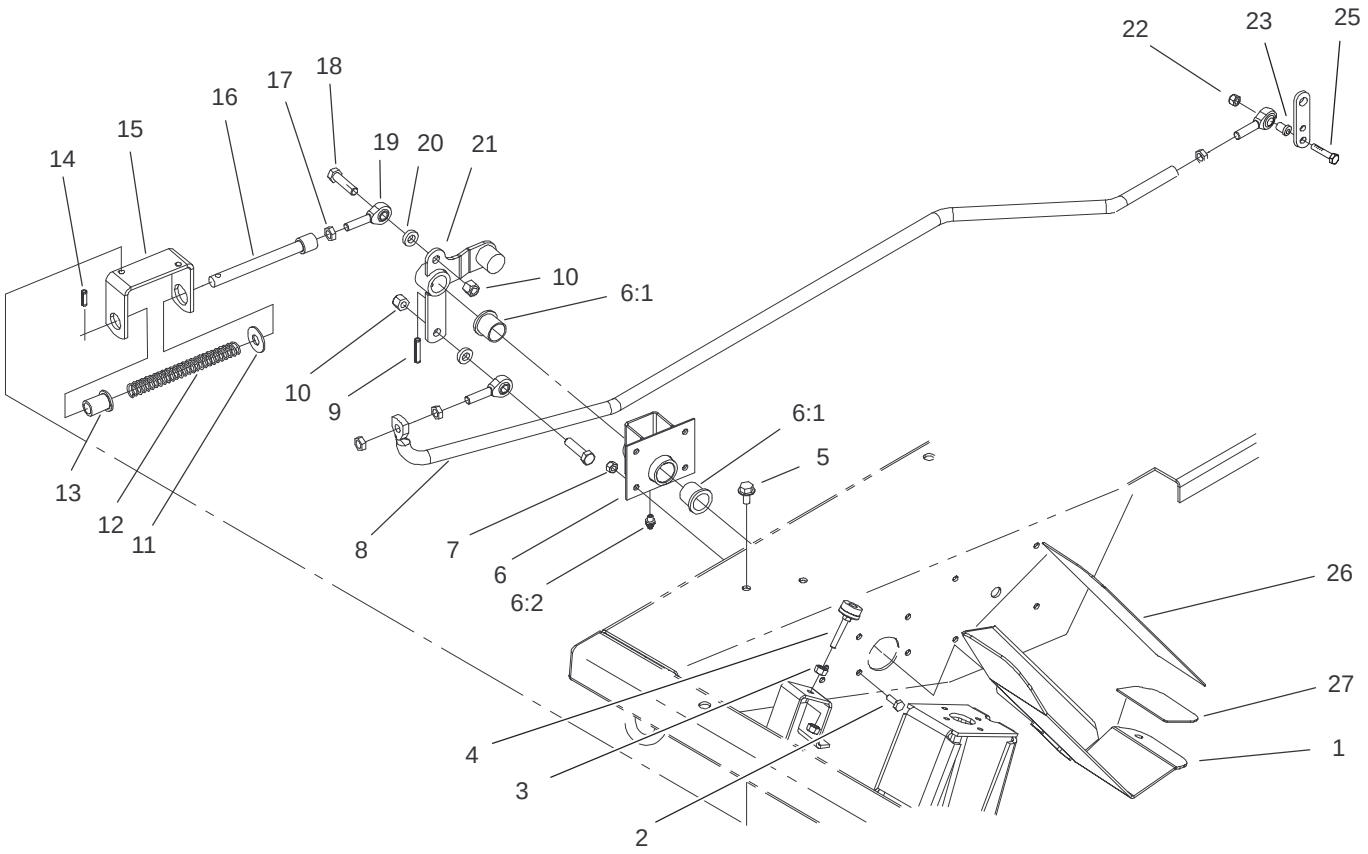

Sheet No.:7

Traction Pedal and Linkage Assembly

Ref. No.	Part No.	Qty.	Description
1	93–5133–01	1	Traction Pedal ASM
2	321–4	4	Screw–HH
3	3217–6	2	Nut–Hex
4	32141–36	1	Screw–Adjustment, Level
5	32144–14	2	Screw–HWH
6	104–3565	1	Pedal Bracket ASM
6:1	256–10	2	Bushing–Flange
6:2	302–5	1	Fitting–Grease
7	3296–42	4	Nut–Lock, NI
8	100–3136–03	1	Rod–Traction
9	32121–9	1	Pin–Spring
10	3296–39	2	Nut–Lock, NI
11	3256–5	1	Washer–Flat
12	84–9100	1	Spring
13	92–7610	1	Retainer–Spring
14	32121–11	1	Pin–Roll
15	100–3137–03	1	Bracket–Spring
16	92–7609	1	Shaft–Spring
17	3220–3	4	Nut–Jam
18	323–8	2	Screw–HH
19	2411–36	3	Bearing–End, Rod
20	80–7730	2	Spacer
21	100–3138	1	Lever–Traction
22	3296–42	1	Nut–Lock, NI
23	104–7517	1	Spacer

Ref. No.	Part No.	Qty.	Description
25	321–9	1	Screw–HH
26	93–5347	1	Abrasive–Pedal
27	93–5368	1	Abrasive–Pedal

3328–556

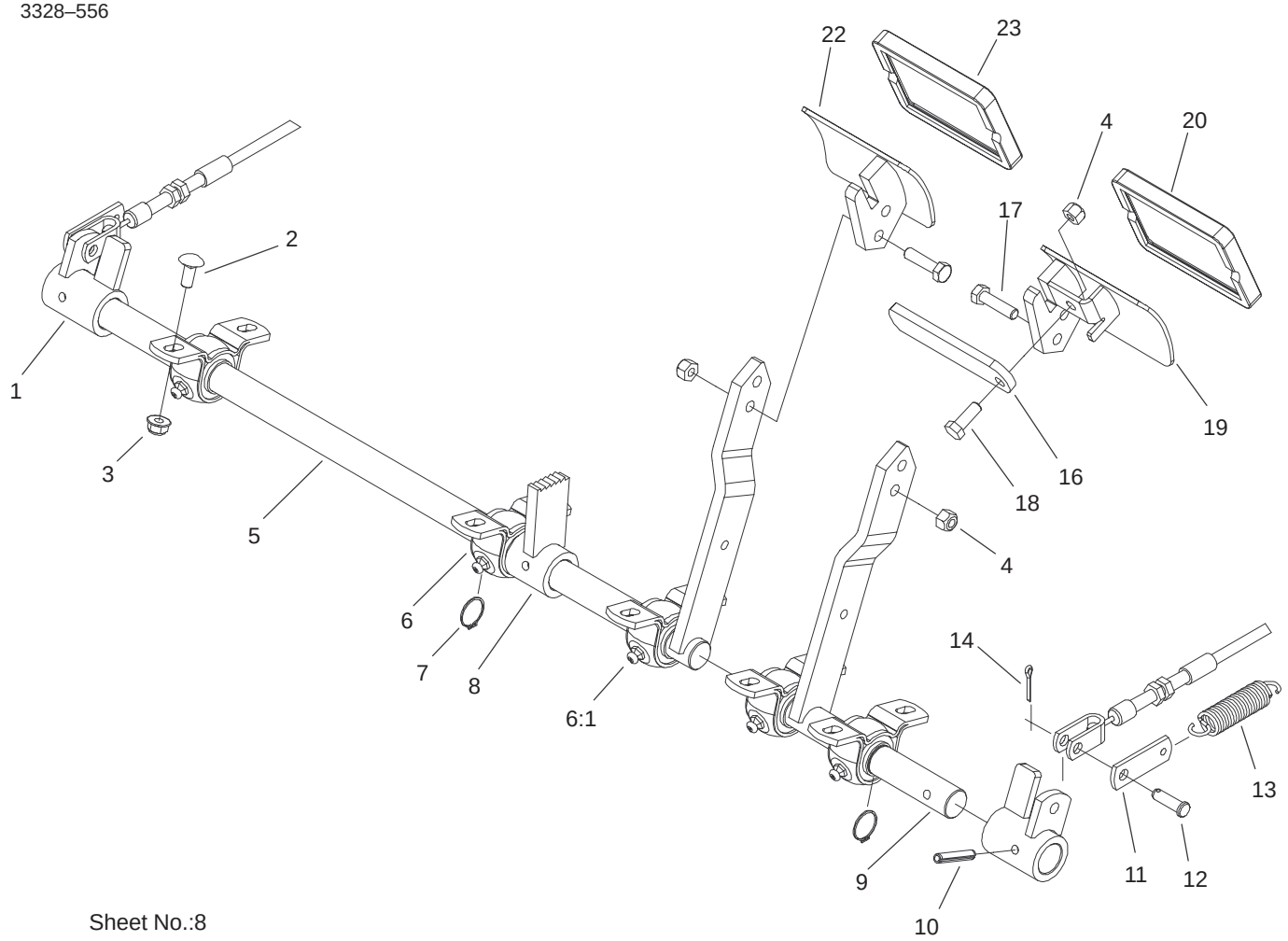

Sheet No.:8

Brake Pedal and Linkage Assembly

Ref. No.	Part No.	Qty.	Description
1	100–3002–03	2	Brake Lever ASM
2	3230–20	10	Screw–CARR
3	104–8300	10	Nut–Flange, NI
4	3296–29	5	Nut–Lock, NI
5	100–3000–03	1	RH Brake Arm ASM
6	93–4849	5	Bearing–Block, Pillow
6:1	302–5	1	Fitting–Grease
7	32151–83	3	Ring–Snap
8	93–5475–03	1	Brake Latch ASM
9	100–2997–03	1	LH Brake Arm ASM
10	32121–15	3	Pin–Roll
11	100–5540	2	Strap–Brake
12	283–61	2	Pin–Yoke
13	93–5262	2	Spring–Extension
14	3272–6	2	Pin–Cotter
16	93–5568	1	Arm–Lock
17	322–6	4	Screw–HH
18	322–4	1	Screw–HH
19	105–4553–03	1	LH Pedal ASM
20	27–7570	1	Pad–Turn, Left
22	105–4554–03	1	RH Pedal ASM
23	27–7580	1	Pad–Turn, Right

Ref. No.	Part No.	Qty.	Description

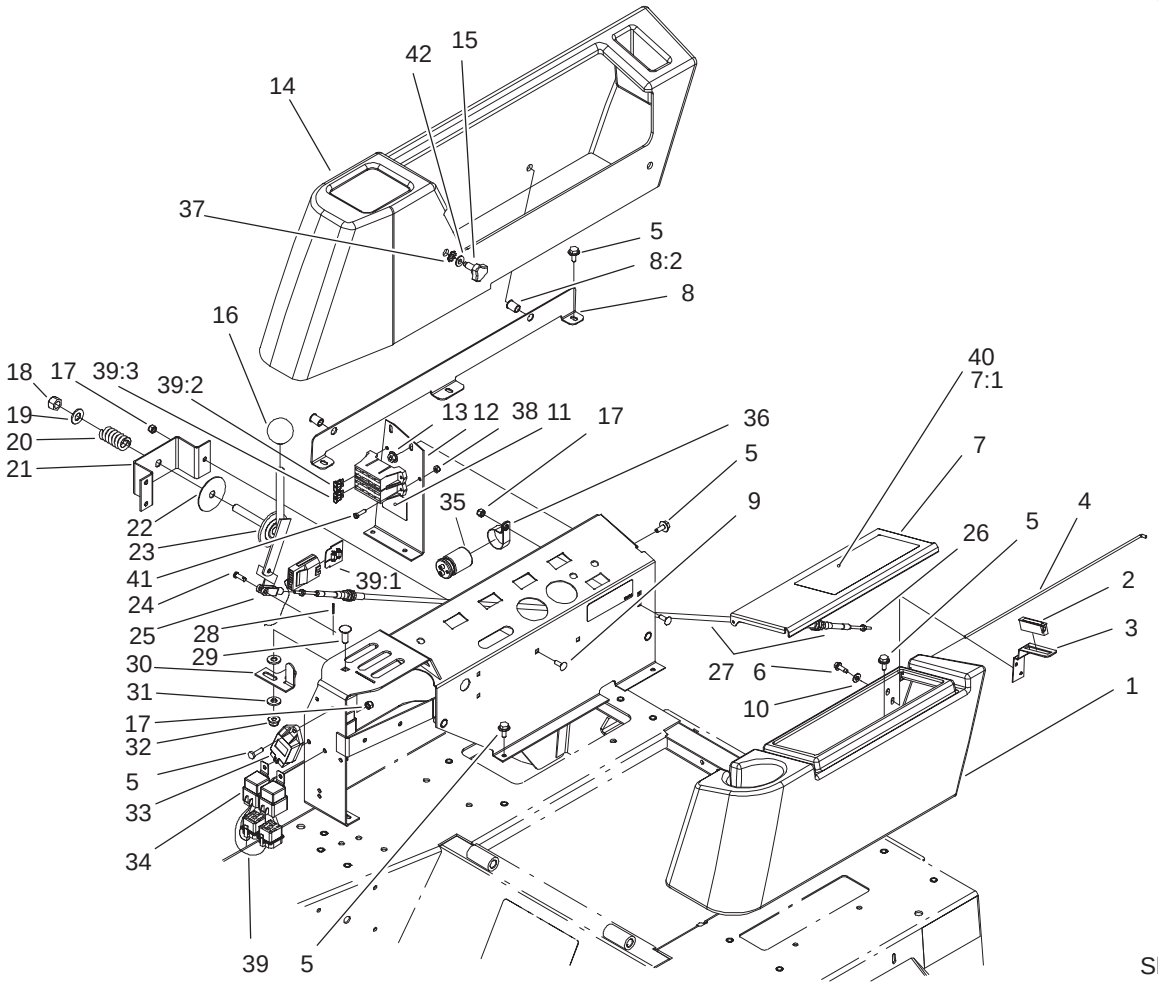

Sheet No.:9

Control Console and Tool Box Assembly

Ref. No.	Part No.	Qty.	Description
1	104–7515	1	Housing–Box, Tool
2	58–4250	1	Catch–Magnetic
3	104–7545	1	Bracket–Latch
4	104–7548	1	Rod–Hinge
5	3234–4	19	Screw–HHF
6	32104–95	2	Screw–HWH
7	104–8321	1	Tool Box Cover ASM
7:1	106–6756	1	Decal–Warning
8	105–0780	1	Console Support ASM
8:2	32148–9	2	Insert–Nut
9	3229–1	5	Screw–CARR
10	3256–22	2	Washer–Flat
11	104–8323	1	Decal–Fuses
12	105–0785–03	1	Support–Panel, Control
13	32128–33	2	Nut–HF
14	104–7514	1	Housing–Console
15	95–9648	4	Knob
16	233–48	1	Knob
17	3296–42	9	Nut–Lock, NI
18	3296–23	1	Nut–Lock, NI
19	3256–26	1	Washer–Flat
20	3–8596	1	Spring–Compression
21	104–7539–03	1	Bracket–Pivot
22	3–2858	1	Disc–Friction
23	104–7538	1	Throttle Lever ASM

Ref. No.	Part No.	Qty.	Description
24	283–67	2	Pin–Clevis
25	282–28	2	Clevis–Adjustable
26	3219–14	2	Nut–Hex
27	104–7547	1	Cable–Throttle
28	3272–1	2	Pin–Cotter
29	3231–22	1	Screw–CARR
30	104–7543	1	Stop–Lever, Lift
31	66–2920	2	Washer–Friction
32	104–8301	1	Nut–Flange, NI
33	98–7611	1	Controller–Glow
34	70–1480	6	Relay
35	37–2690	2	Capacitor
*35:1	3252–18	2	Screw
*35:2	3254–1	2	Washer–Lock, Internal
36	2412–74	2	R–Clamp
37	32151–72	4	Ring–Retaining
38	3296–2	2	Nut–Lock
39	106–6761	1	Harness–Wire, Gm4000 Console
39:1	218–573	1	Fuse–5 Amp
39:2	218–578	4	Fuse–10 Amp
39:3	92–3188	1	Diode–Board, Circuit
40	106–6752	1	Decal–Warning (Ce)
41	32105–13	2	Screw–SHH
42	3256–3	4	Washer–Flat
43	3290–378	6	Tie–Cable

* Not illustrated

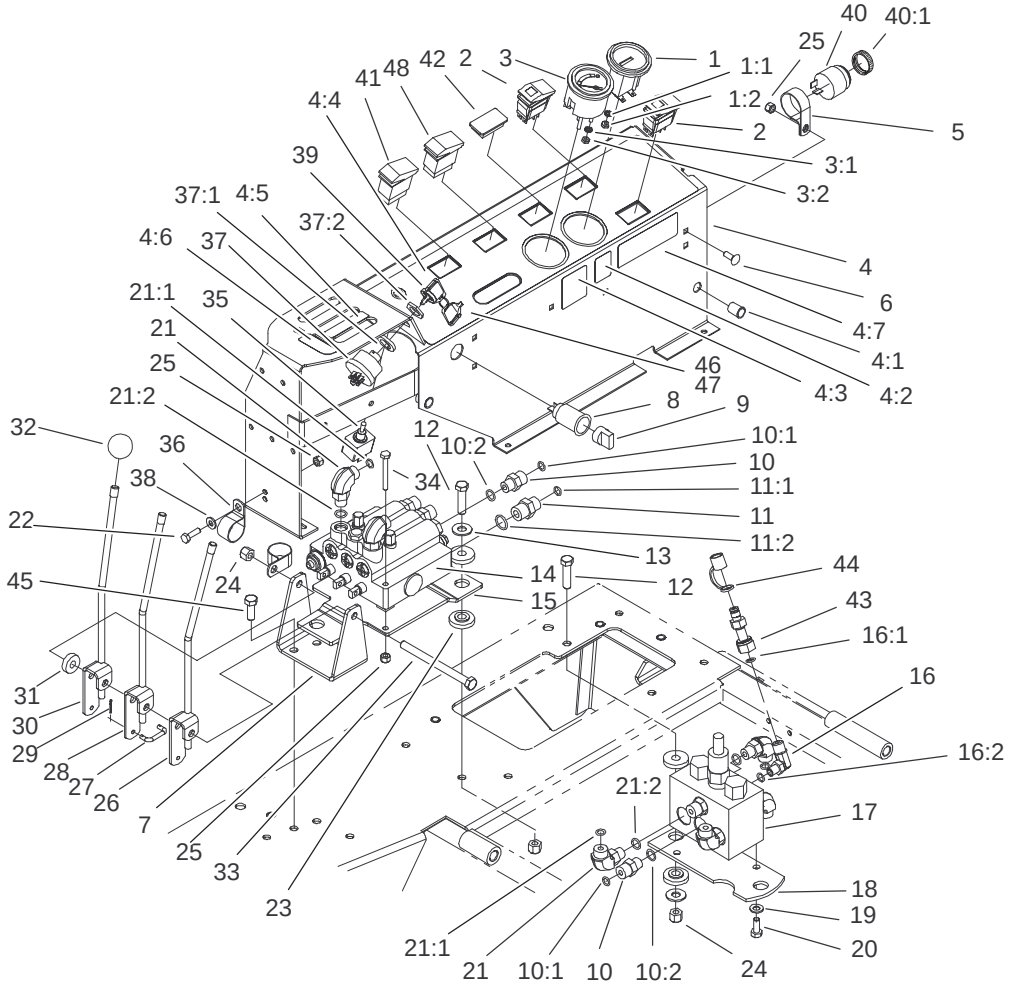

Sheet No.:10

Control Console Assembly

Ref. No.	Part No.	Qty.	Description
1	66–2950	1	Gauge–Hourmeter
1:1	3255–20	2	Washer–Lock
1:2	3217–25	2	Nut–Hex
2	100–8072	2	Switch
3	98–9339	1	Gauge–Fuel
3:1	3254–1	3	Washer–Lock, Internal
3:2	3217–27	3	Nut–Hex
*3:3	105–9265	1	Bulb And Lamp ASM
4	106–6751	1	Control Panel ASM
4:1	32148–9	2	Insert–Nut
4:2	93–7252	1	Decal–International
4:3	105–4674	1	Decal–Noise, Ce
4:4	106–2046	1	Decal–Control Panel
4:5	104–8324	1	Decal–Lift
4:6	104–8325	1	Decal–Lock
4:7	104–0131	1	Decal–Ansi
5	2412–74	1	R–Clamp
6	3229–1	1	Screw–CARR
7	105–0788–03	1	Bracket–Pivot
8	99–7411	1	Point–Power
9	99–7416	1	Cap
10	340–2	5	Fitting–HYD, Straight
10:1	237–22	1	O–Ring
10:2	237–42	1	O–Ring
11	340–3	1	Adapter
11:1	237–22	1	O–Ring

Ref. No.	Part No.	Qty.	Description
11:2	237–79	1	O–Ring
12	323–8	5	Screw–HH
13	3256–4	5	Washer–Flat
14	105–4563	1	Control Valve ASM
15	105–0789–03	1	Bracket–Valve
16	340–97	1	Fitting–HYD, 90°
16:1	237–22	1	O–Ring
16:2	237–78	1	O–Ring
17	104–0788	1	Valve ASM
18	104–2231–03	1	Plate–Valve
19	3256–23	2	Washer–Flat
20	322–3	2	Screw–HH
21	340–77	6	Fitting–HYD, 90°
21:1	237–22	1	O–Ring
21:2	237–42	1	O–Ring
22	321–5	1	Screw–HH
23	240–11	10	Grommet–Mount, Tank
24	3296–39	8	Nut–Lock, NI
25	3296–42	4	Nut–Lock, NI
26	100–3123	1	LH Lever ASM
27	69–9140	3	Link–Lever, Valve
28	100–3122	1	Center Lever ASM
29	3272–1	6	Pin–Cotter
30	100–3121	1	RH Lever ASM
31	62–6660	1	Spacer

* Not illustrated

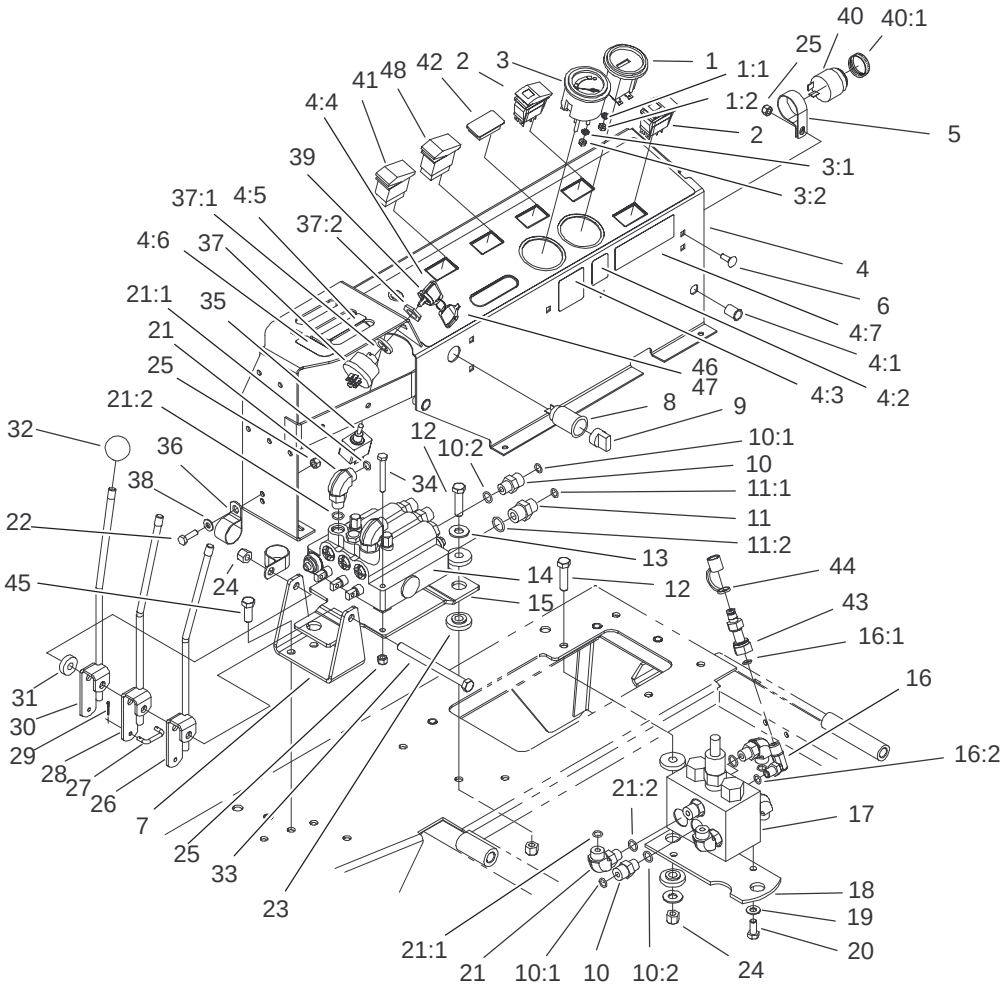

Sheet No.:10

Control Console Assembly (Continued)

Ref. No.	Part No.	Qty.	Description
32	233–42	3	Knob
33	323–38	1	Screw–HH
34	321–11	2	Screw–HH
35	93–5270	1	Switch–PTO
36	2412–126	2	R–Clamp
37	88–9830	1	Key Switch ASM
37:1	3254–5	1	Washer–Lock, Internal
37:2	218–461	1	Nut–HH
38	3256–22	1	Washer–Flat
39	63–8360	1	Key–Ignition
40	80–9330	1	Alarm–Audio
40:1	104–5107	1	Nut–Plastic, Knurled
41	95–8999	1	Switch
42	99–7420	1	Plug–Hole
43	86–5480	1	Nipple–Test
44	354–79	1	Cap–Dust, Yellow
45	323–6	2	Screw–HH
46	99–8970	1	Key–Latch, Hood
47	98–9321	1	Ring–Key
48	106–2027	1	Switch–Intermittent

Ref. No.	Part No.	Qty.	Description

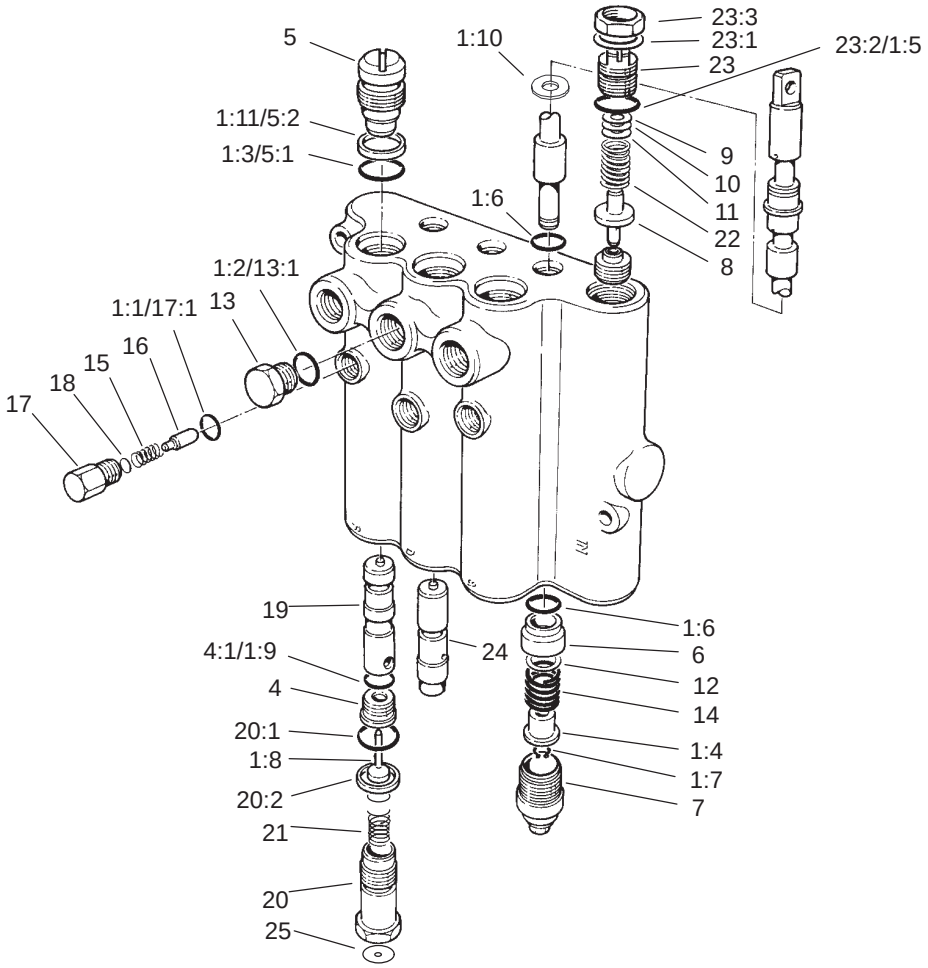

T–3832
Sheet No.:B3

Control Valve Assembly No. 105–4563

Ref. No.	Part No.	Qty.	Description
1	60–3780	1	Seal Kit
1:1	58–6790	3	O–Ring
1:2	58–6720	3	O–Ring
1:3	60–5720	6	O–Ring
1:4	58–6310	6	Spacer
1:5	58–6750	1	O–Ring
1:6	58–6450	6	O–Ring
1:7	58–6460	3	Ring
1:8	58–6290	3	Poppet
1:9	58–6340	3	O–Ring
1:10	58–6320	3	Wiper
1:11	58–6370	1	Washer
4	58–6330	3	Seat
4:1	58–6340	1	O–Ring
5	58–6350	3	Plug
5:1	60–5720	1	O–Ring
5:2	58–6370	1	Washer
6	58–6400	3	Bushing
7	58–6420	3	Cap
8	92–2568	1	Poppet
9	58–6470	1	Washer
10	58–6480	1	Washer
11	58–6490	1	Washer
12	65–2770	3	Washer
13	58–6710	1	Plug
13:1	58–6720	1	O–Ring

Ref. No.	Part No.	Qty.	Description
14	58–6730	3	Spring
15	58–6760	3	Spring
16	58–6770	3	Plunger
17	58–6780	3	Plug
17:1	58–6790	1	O–Ring
18	60–6450	1	Disc
19	84–6420	2	Plunger
20	69–1800	3	Plug ASM
20:1	58–6360	1	O–Ring
20:2	58–6370	1	Washer
21	69–1810	3	Spring
22	84–6450	1	Spring
23	69–1830	1	Plug ASM
☆23:1		1	Washer
23:2	58–6750	1	O–Ring
☆23:3		1	Nut–Lock
24	69–1840	1	Plunger
25	105–4565	2	Plate–Orifice

☆ Not serviced separately

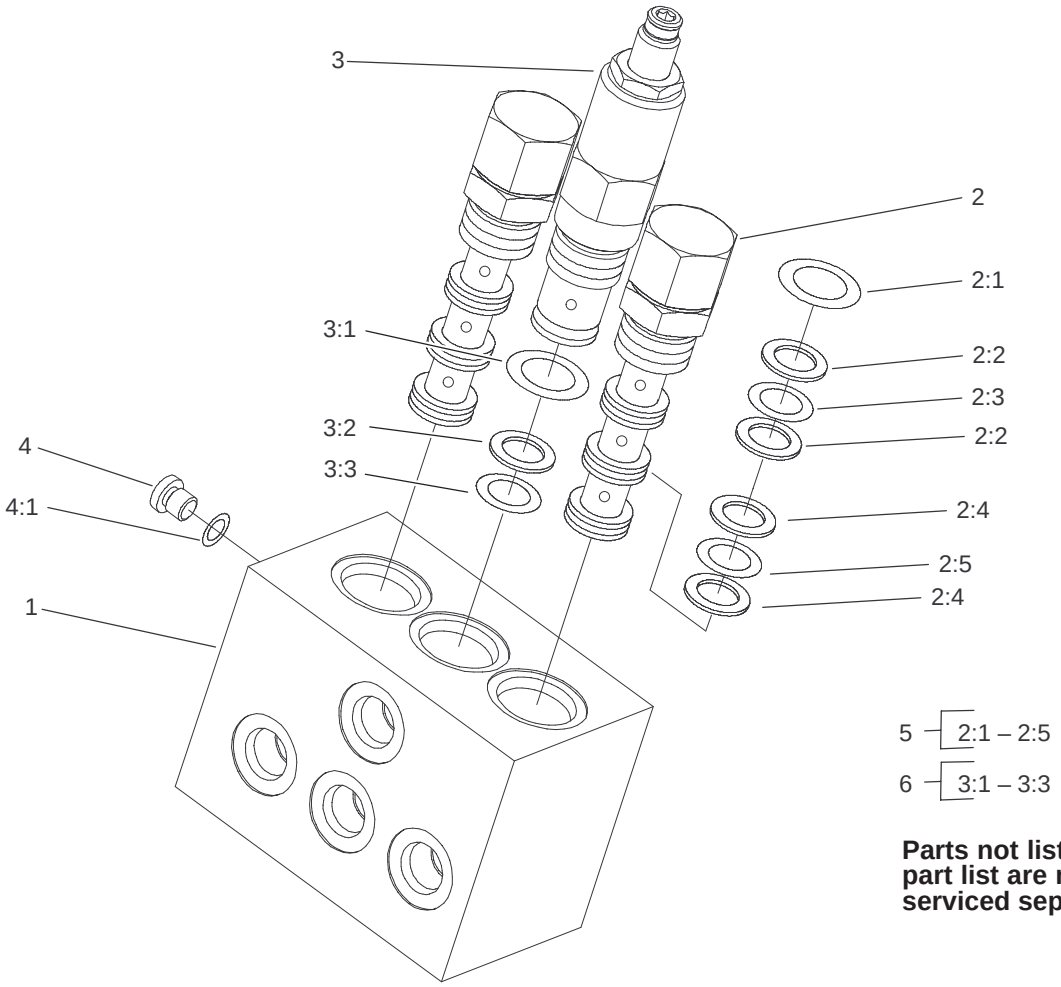

Parts not listed in part list are not serviced separately

Sheet No.:B4

Valve Assembly No. 104–0788

Ref. No.	Part No.	Qty.	Description
☆1		1	Manifold
2	104–4295	2	Valve–Pilot
3	104–4296	1	Valve–Relief
4	353–991	1	Plug–Hex, Hollow
4:1	237–156	1	O–Ring
5	99–5502	2	Seal Kit
6	99–5503	1	Seal Kit

Ref. No.	Part No.	Qty.	Description

☆ Not serviced separately

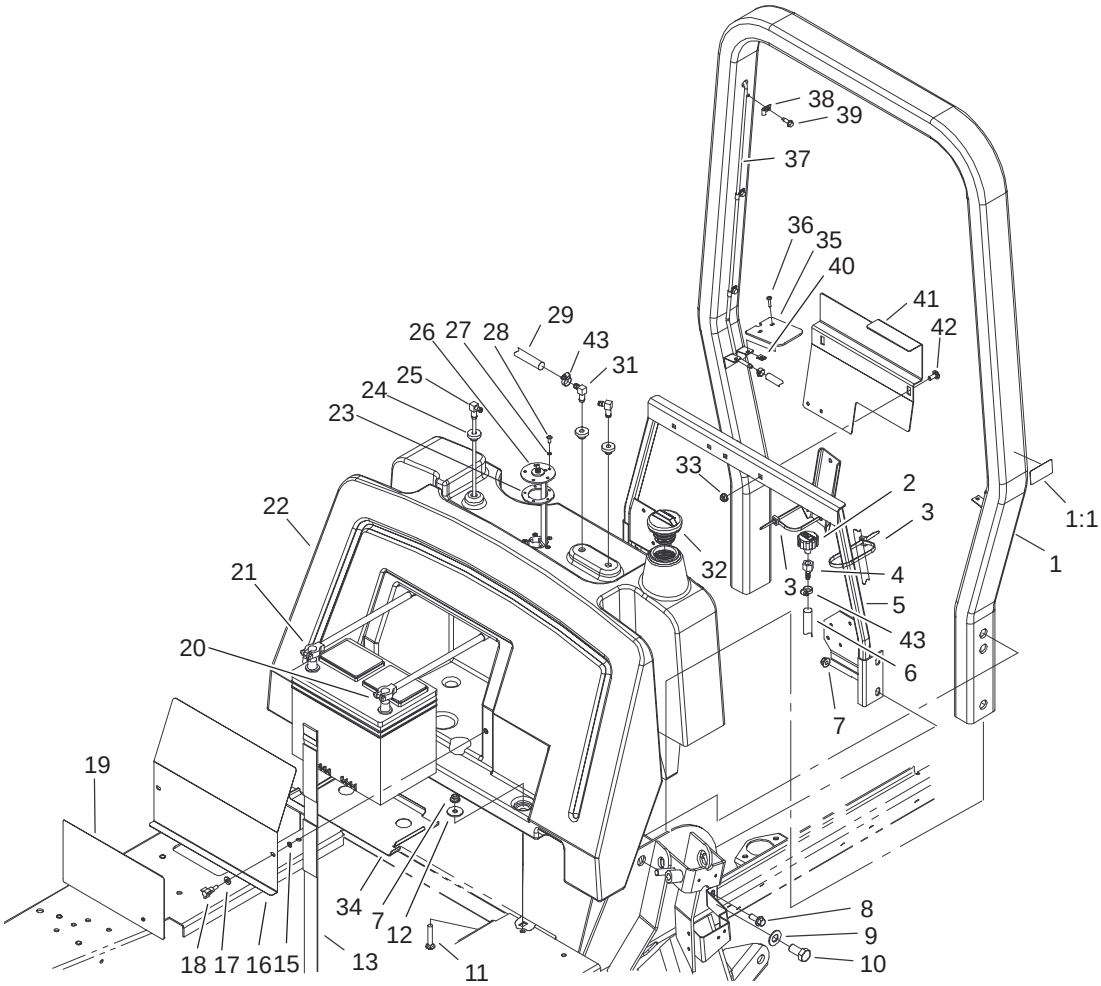

Sheet No.:11

Fuel Tank, Battery and Roll Over Protection System (ROPS) Assembly

Ref. No.	Part No.	Qty.	Description
1	105–2849	1	Rops ASM
1:1	105–2834	1	Decal–Rops
2	68–6150	1	Breather–Air
3	3290–378	2	Tie–Cable
4	354–95	1	Fitting–Female, Barbed
5	104–0714–03	1	Tank Support ASM
6	95–4274	1	Hose–Fuel
7	104–8301	6	Nut–Flange, NI
8	3234–42	4	Screw–HHF
9	3256–27	4	Washer–Flat
10	327–3	4	Screw–HH
11	3231–6	2	Screw–CARR
12	63–8410	2	Washer
13	94–1445	1	Strap–Battery
15	32151–106	2	Ring–Retaining
16	104–0717–03	1	Cover–Battery
17	3256–22	2	Washer–Flat
18	233–70	2	Knob–3 Star
19	104–8336	1	Decal–Service
20	104–0761	1	Cable–Negative
21	104–0760	1	Cable–Positive
22	100–8119	1	Tank–Fuel
23	62–7650	1	Gasket

Ref. No.	Part No.	Qty.	Description
24	46–6560	3	Bushing
25	104–0701	1	Pipe–Stand
26	104–0700	1	Sender–Fuel
27	3253–15	5	Washer–Lock/Sp
28	32122–24	5	Screw–Pth
29	47–2986	1	Hose–Fuel
31	100–1596	2	Fitting–90°
32	93–3102	1	Cap–Fuel
33	104–8300	2	Nut–Flange, NI
34	105–0774–03	1	Plate–Battery
35	104–8319	2	Cover–Tank
36	3250–13	4	Screw–PPH
37	104–0718	1	Tube–Vent
38	2412–72	3	Clip–Closed, Insulated
39	32104–95	3	Screw–HWH
40	3290–191	4	Nut–Speed
41	104–2286–03	1	Bracket–Tank, Fuel
42	3230–1	2	Bolt–CARR
43	2412–108	3	Clamp–Worm

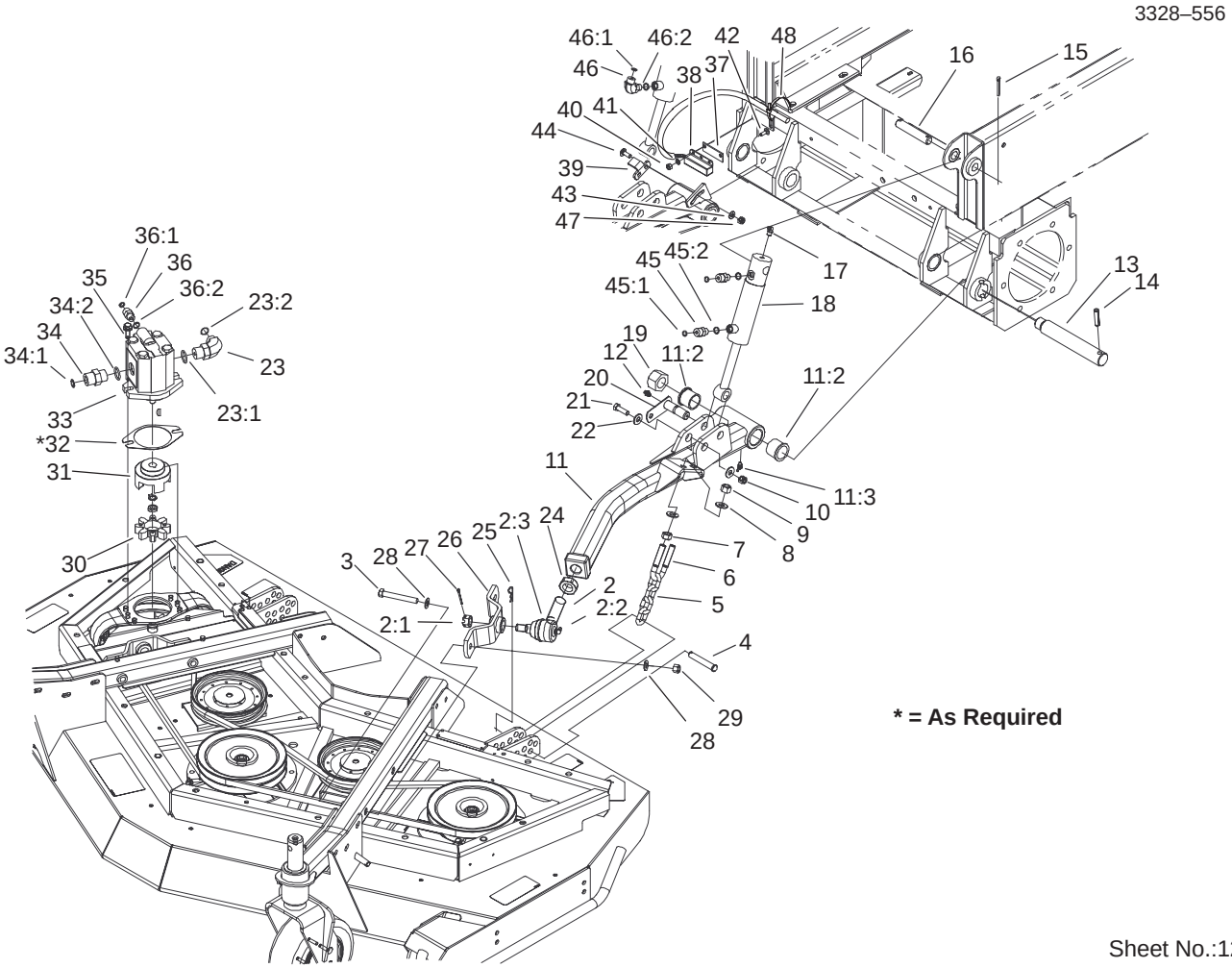

Sheet No.:12

Front Deck Lift Arm and Cylinder Assembly

Ref. No.	Part No.	Qty.	Description
2	86–8101–03	2	Joint–Ball, LH
2:1	32136–2	1	Nut–SHH
2:2	302–40	1	Fitting–Grease
2:3	105–7835	1	Seal
3	324–19	4	Screw–HH
4	283–55	2	Pin–Clevis
5	95–6231	2	Chain–HOC
6	104–0108	2	U–Bolt
7	3217–9	4	Nut–HH
8	3256–26	8	Washer–Flat
9	3296–25	4	Nut–Lock, NI
10	3296–39	2	Nut–Lock, NI
11	100–3032	1	LH Lift Arm ASM
11	100–3031	1	RH Lift Arm ASM
11:2	104–8339	2	Bushing–Flange
11:3	302–11	1	Fitting–Lube, 45°
12	302–5	2	Fitting–Grease
13	100–3017	2	Pin–Arm, Lift
14	32121–110	2	Pin–Roll, Slotted
15	3272–23	4	Pin–Cotter
16	100–5559	2	Pin–Lift, Upper
17	302–33	2	Fitting–Grease
18	100–3016	2	Cylinder–HYD
19	3296–49	2	Nut–Lock, NI
20	100–3020	2	Pin ASM
21	323–7	2	Screw–HH

Ref. No.	Part No.	Qty.	Description
22	3256–4	4	Washer–Flat
23	340–139	5	Fitting–HYD, 90°
23:1	237–81	1	O–Ring
23:2	237–65	1	O–Ring
24	21–3001–03	2	Nut–Jam, Push Arm
25	3290–467	2	Pin–Hair
26	93–4583–01	2	Mount–Joint, Ball
27	3272–12	2	Pin–Cotter
28	87–7480	8	Washer
29	3296–48	4	Nut–Lock NI
30	104–3542	3	Spider
31	104–3541	3	Hub–Spider
32	100–5638	3	Shim–A Mount
33	99–5489	3	Motor–Gear
34	340–8	1	Adapter
34:1	237–65	1	O–Ring
34:2	237–81	1	O–Ring
35	3234–42	6	Screw–HHF
36	340–2	3	Fitting–HYD, Straight
36:1	237–22	1	O–Ring
36:2	237–42	1	O–Ring
37	104–3595	1	Spacer–Switch
38	104–0758	1	Sensor–Ferrous
39	104–3598	1	Plate–Sensing, Front
40	3296–42	2	Nut–Lock, NI
41	3256–60	2	Washer–Flat

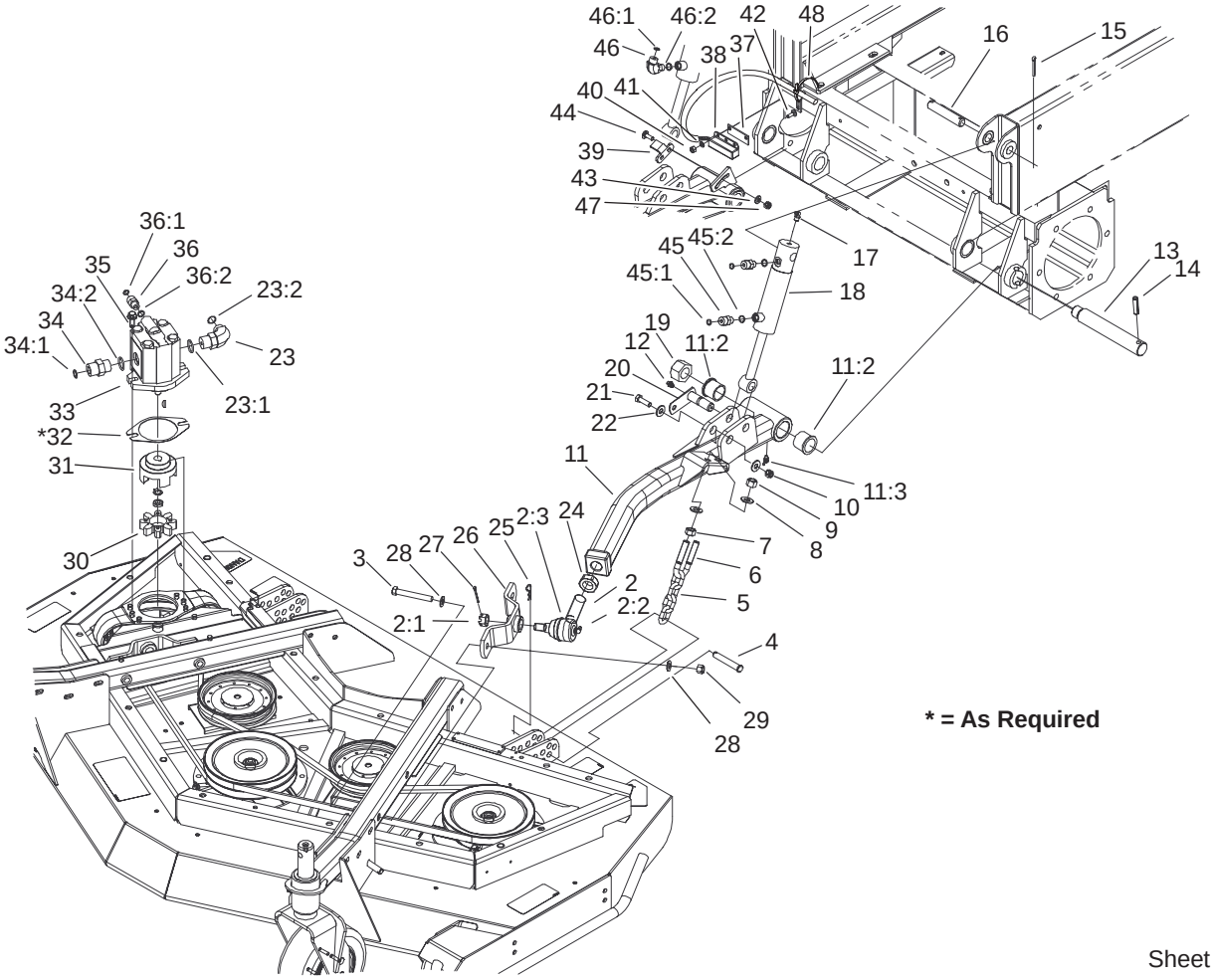

Sheet No.:12

Front Deck Lift Arm and Cylinder Assembly (Continued)

Ref. No.	Part No.	Qty.	Description
42	3229–1	2	Screw–CARR
43	3256–23	2	Washer–Flat
44	3230–16	2	Screw–CARR
45	340–2	3	Fitting–HYD, Straight
45:1	237–22	1	O–Ring
45:2	237–42	1	O–Ring
46	340–77	1	Fitting–HYD, 90°
46:1	237–22	1	O–Ring
46:2	237–42	1	O–Ring
47	3296–29	2	Nut–Lock, NI
48	3290–379	1	Tie–Cable

Ref. No.	Part No.	Qty.	Description

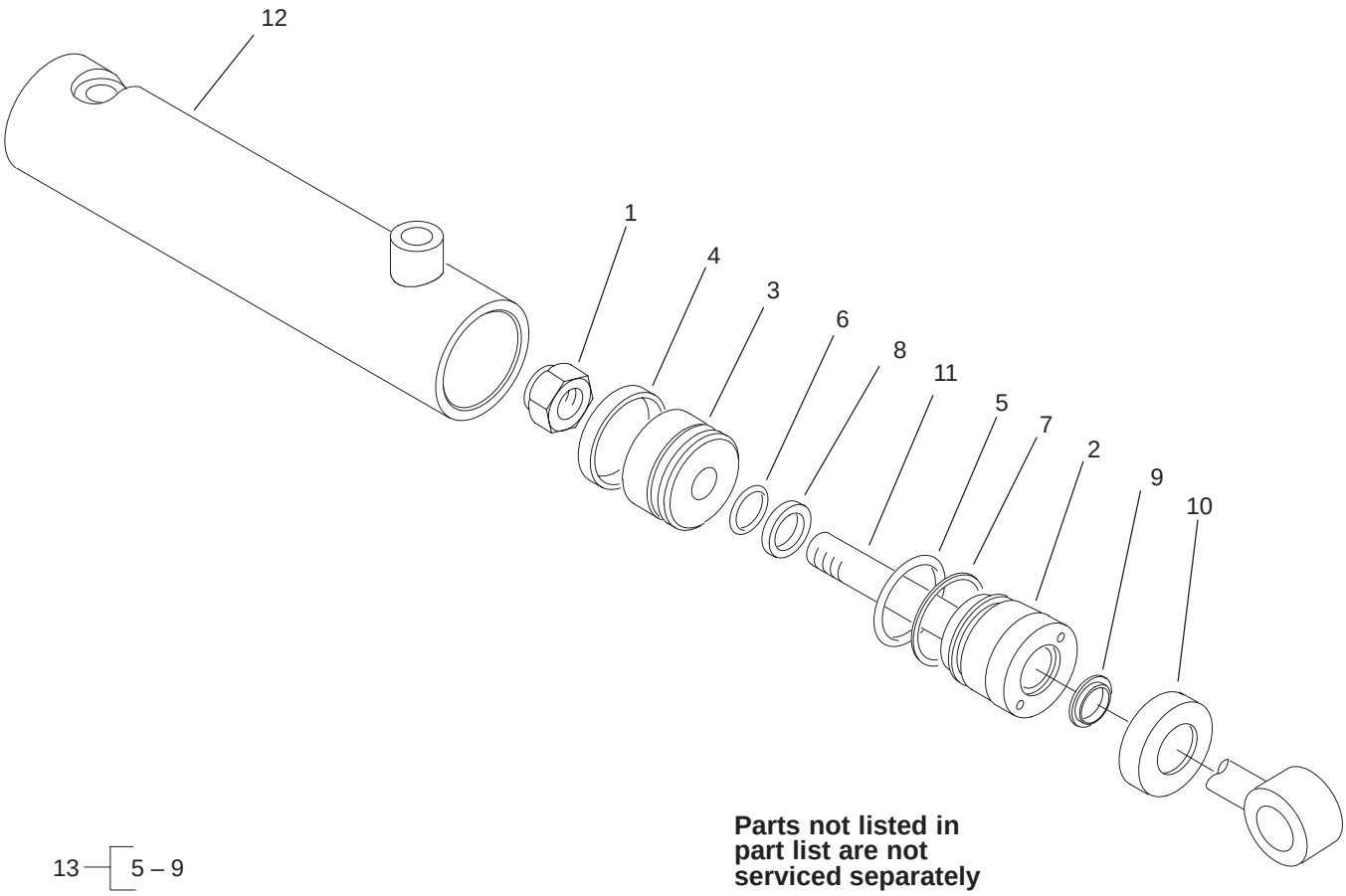

T–3762
Sheet No.:B7

Hydraulic Cylinder Assembly No. 100–3016

Ref. No.	Part No.	Qty.	Description
1	32152–10	1	Locknut
☆2		1	Head
3	70–2780	1	Piston
☆4		1	Uniring
☆5		1	O–Ring
☆6		1	O–Ring
☆7		1	Backup
☆8		1	Seal–Rod
☆9		1	Seal–Dust
☆10		1	Collar
☆11		1	Shaft
☆12		1	Barrel W/Clevis
13	86–5360	1	Seal Repair Kit

Ref. No.	Part No.	Qty.	Description

☆ Not serviced separately

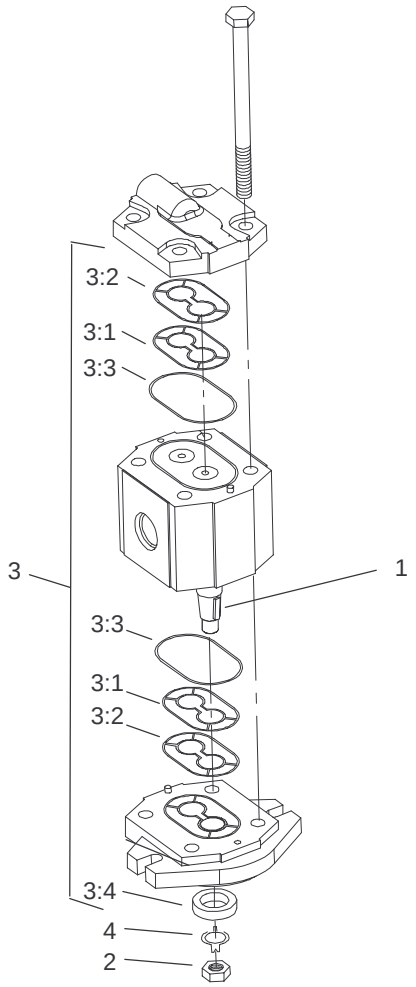

Parts not listed in part list are not serviced separately

T–3769
Sheet No.:B8

Motor Assembly No. 99–5489

Ref. No.	Part No.	Qty.	Description
1	3257–3	1	Key–Woodruff
2	3277–1	1	Nut–Hex
3	104–4284	1	Seal Kit
☆3:1		2	Anti–Ext Ring
☆3:2		2	Seal
☆3:3		2	O–Ring
☆3:4		1	Seal–Lip, Shaft
4	104–4283	1	Washer–Tab

Ref. No.	Part No.	Qty.	Description

☆ Not serviced separately

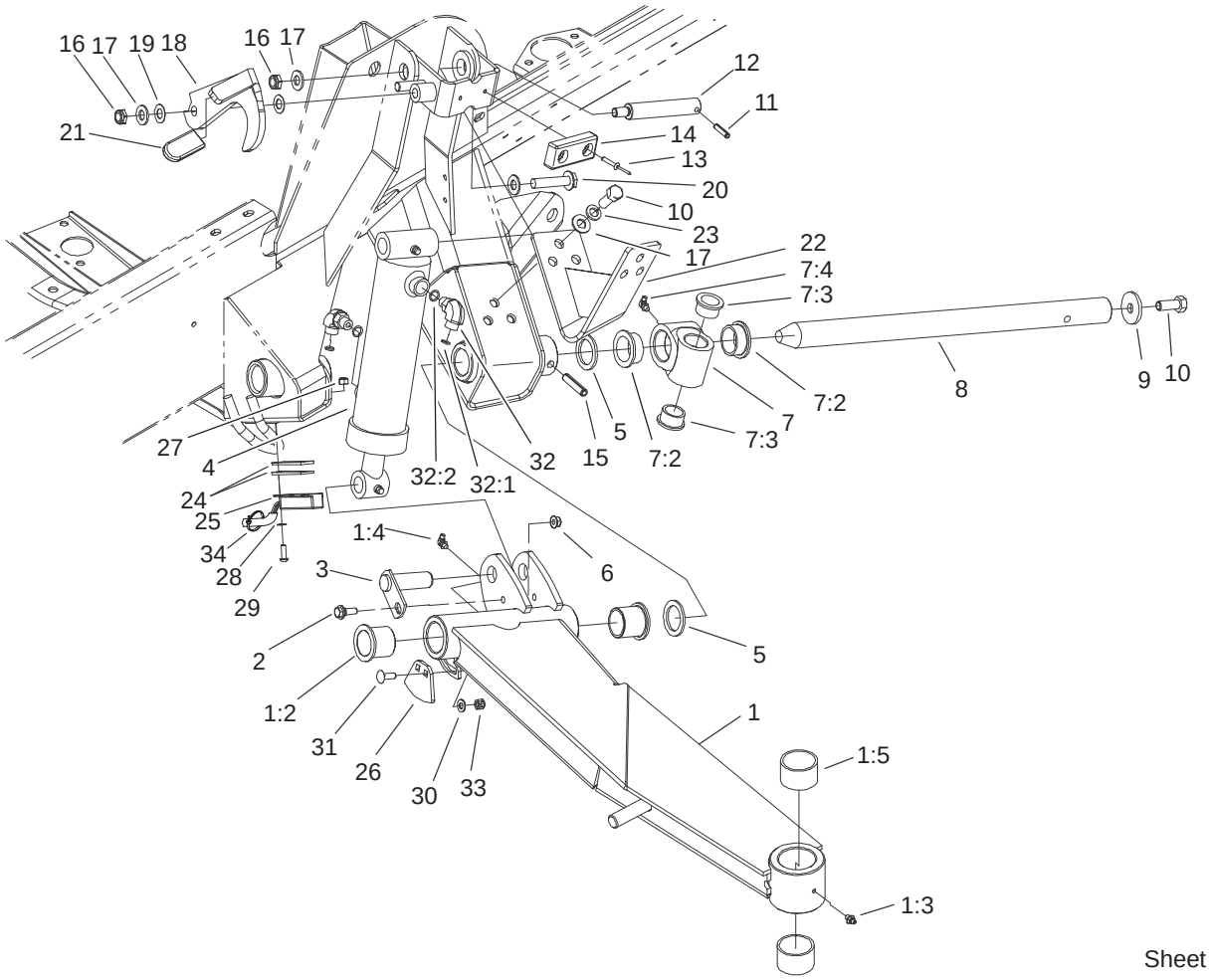

Sheet No.:13

Side Deck Lift Arm, Cylinder and Latch Assembly

Ref. No.	Part No.	Qty.	Description
1	100–8122	1	RH Lift Arm ASM
1	100–8123	1	LH Lift Arm ASM
1:2	104–8340	2	Bushing
1:3	302–5	1	Fitting–Grease
1:4	302–60	1	Fitting–Grease
1:5	104–8341	2	Bushing–Straight
2	27–0410	2	Screw–Shoulder
3	100–5674	2	Pin ASM
4	99–5496	2	Cylinder–Lift
5	256–304	4	Washer–Thrust
6	104–8300	2	Nut–Flange, NI
7	100–8115	2	Pivot Hub ASM
7:2	104–3517	2	Bushing–Flange
7:3	256–132	2	Bushing–Flange
7:4	302–60	1	Fitting–Grease
8	100–5582	2	Shaft–Pivot, Lift Arm
9	106–2008	2	Washer–Thrust
10	325–5	8	Screw–HH
11	32121–9	2	Pin–Spring
12	104–3537	2	Pin–Cylinder
13	3269–11	4	Rivet
14	86–5350	2	Bumper–Rubber
15	32121–110	2	Pin–Roll, Slotted
16	3296–45	4	Nut–Lock, NI
17	3256–26	8	Washer–Flat
18	104–3557–03	1	Latch–LH

Ref. No.	Part No.	Qty.	Description
18	104–3556–03	1	Latch–RH
19	104–3577	4	Washer–Delrin
20	3234–46	2	Screw–HHF
21	48–7081	2	Grip–Plastic
22	104–8330–03	2	Cam Bracket ASM
23	3253–7	6	Washer–Lock
24	104–3595	4	Spacer–Switch
25	104–0758	2	Sensor–Ferrous
26	105–0792	2	Plate–Sensing
27	3296–42	4	Nut–Lock, NI
28	3256–60	4	Washer–Flat
29	3274–65	4	Screw–HSBH
30	3256–23	4	Washer–Flat
31	3230–16	4	Screw–CARR
32	340–77	4	Fitting–HYD, 90°
32:1	237–22	1	O–Ring
32:2	237–42	1	O–Ring
33	3296–29	4	Nut–Lock, NI
34	3290–379	1	Tie–Cable

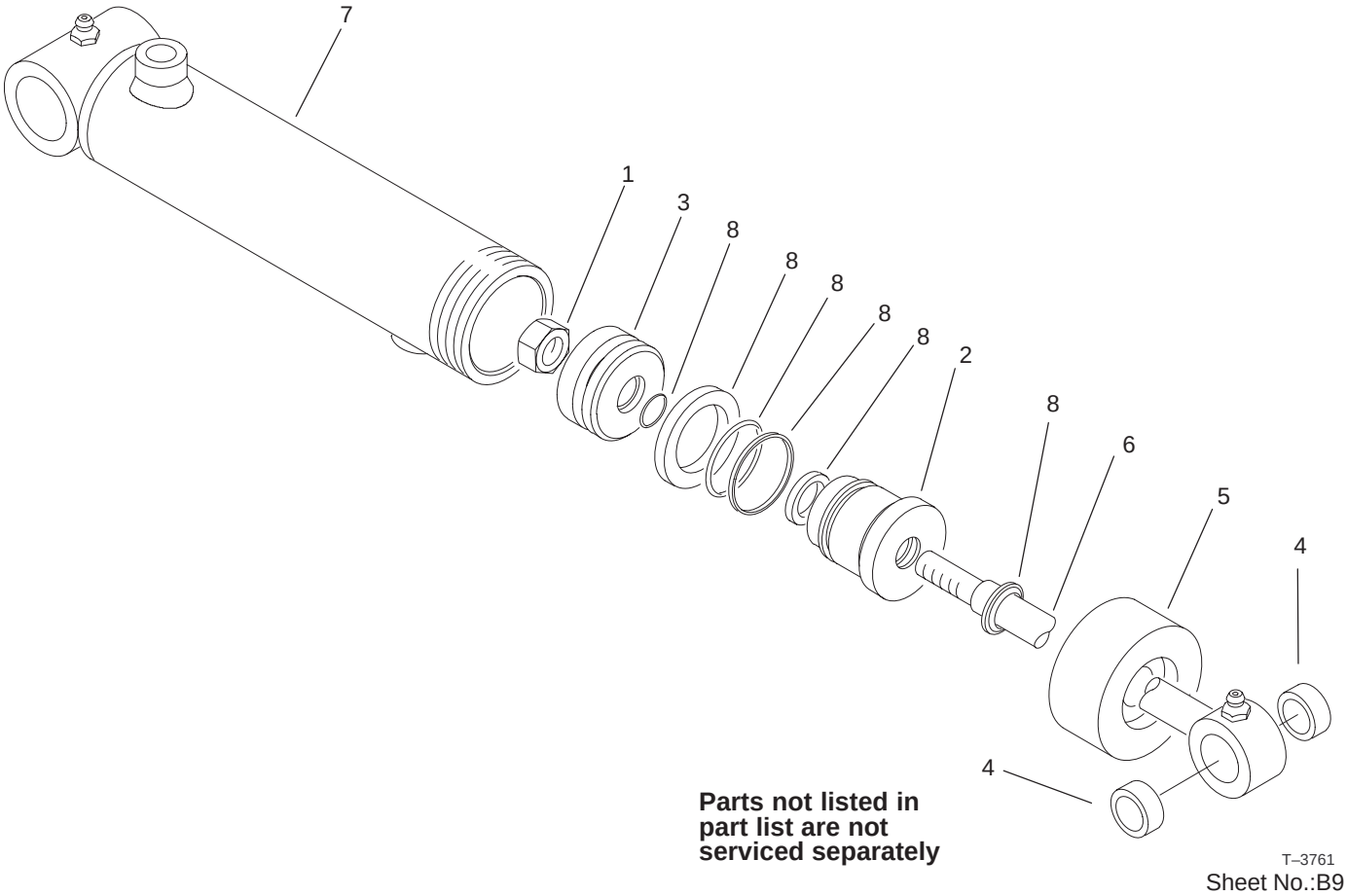

Hydraulic Cylinder Assembly No. 99–5496

Ref. No.	Part No.	Qty.	Description
1	60–9760	1	Nut
☆2		1	Head
☆3		1	Piston
4	104–4281	2	Bushing
5	74–2220	1	Collar
☆6		1	Shaft W/Clevis
☆7		1	Barrel W/Clevis And Ports
8	104–4282	1	Repair Kit

Ref. No.	Part No.	Qty.	Description

☆ Not serviced separately

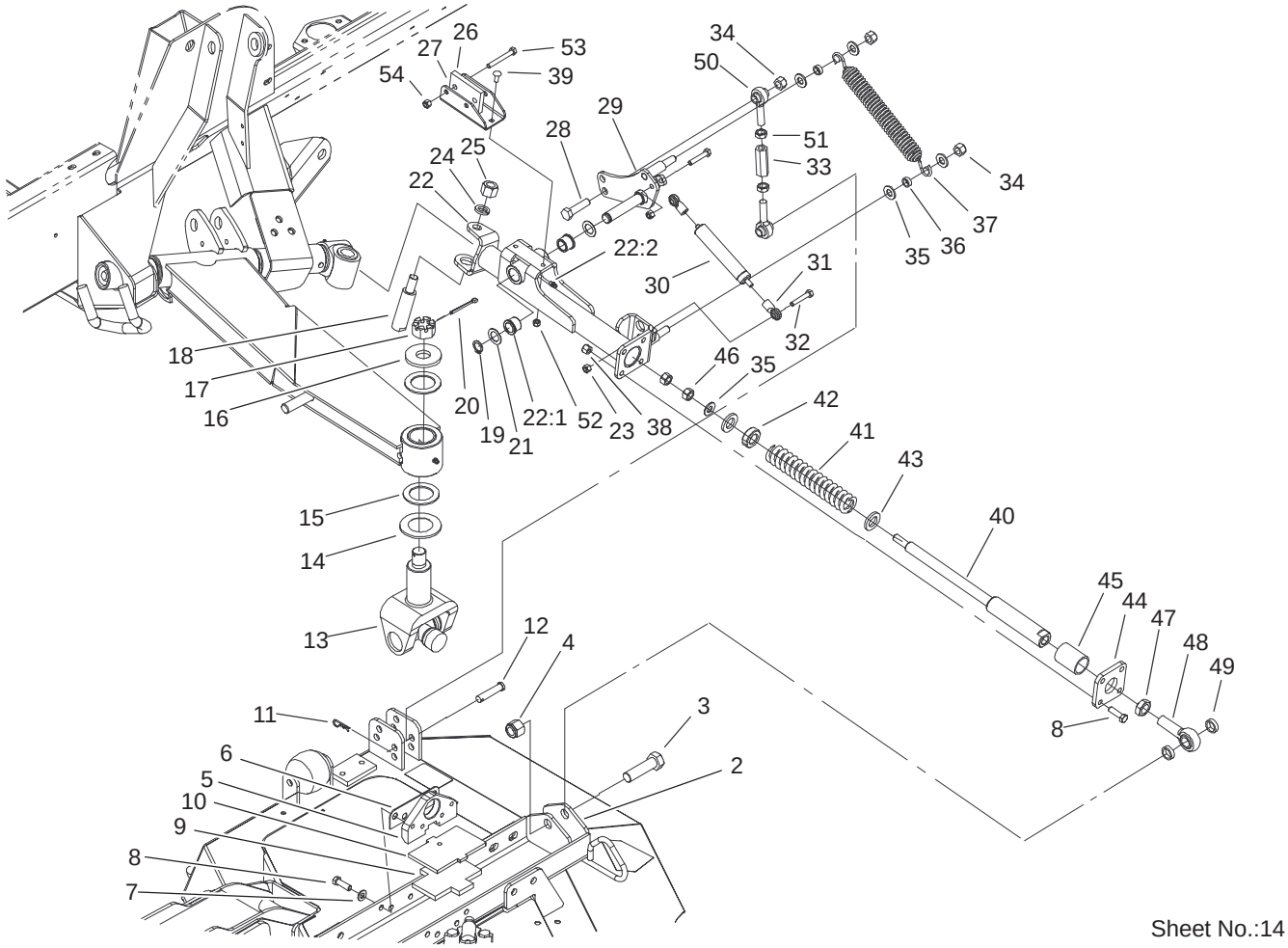

Sheet No.:14

Side Deck Lift Arm and Damper Assembly

Ref. No.	Part No.	Qty.	Description
2	100–8149–03	1	LH Mount ASM
2	100–8148–03	1	RH Mount ASM
3	328–4	2	Screw–HH
4	3296–51	2	Nut–Lock, NI
5	104–8305–03	4	Mount–Base
6	104–0731	4	Shim
7	3256–24	16	Washer–Flat
8	323–7	24	Screw–HH
9	104–8348	2	Plate–Rubber
10	104–8347–03	2	Plate
11	3290–467	2	Pin–Hair
12	92–2739	2	Pin–Clevis
13	104–0705–03	2	Yoke–Joint
13:1	104–4299	1	Cross And Bearing Kit
14	104–0720	2	Spacer
15	104–0721	4	Washer–Thrust
16	104–0719	2	Washer–Hardened
17	32136–11	2	Nut–Hex, Slot
18	104–2281	2	Shaft–Pivot
19	32120–93	2	Ring–Retaining
20	3272–25	2	Pin–Cotter
21	3–6498	4	Washer–Thrust
22	105–2800	1	RH Rear Arm ASM
22	105–2801	1	LH Rear Arm ASM
22:1	256–113	2	Bushing–Flange
22:2	302–5	1	Fitting–Grease

Ref. No.	Part No.	Qty.	Description
23	3296–29	4	Nut–Lock, NI
24	3253–8	2	Washer–Lock
25	3296–53	2	Nut–Lock, NI
26	69–9290	10	Pad–Bumper
27	105–4556–03	2	Bracket–Bumper
28	325–8	2	Screw–HH
29	100–5690–03	1	LH Bell Crank ASM
29	100–5684–03	1	RH Bell Crank ASM
30	105–3249	2	Damper
31	104–8331	4	End–Rod, Spherical
32	322–9	4	Screw–HH
33	105–2809	2	Tube–Link
34	3296–23	6	Nut–Lock, NI
35	3256–26	10	Washer–Flat
36	104–7521	4	Bushing
37	104–7520	2	Spring–Damper
38	3296–39	8	Nut–Lock, NI
39	3229–25	4	Screw–CARR
40	105–4548	2	Shaft–Spring
41	100–8138	2	Spring–Compression
42	105–4552	2	Bearing–Plastic
43	105–4551	4	Washer–Flat
44	105–2807–03	2	Plate
45	105–4550	2	Bushing–Straight

☆ Not serviced separately

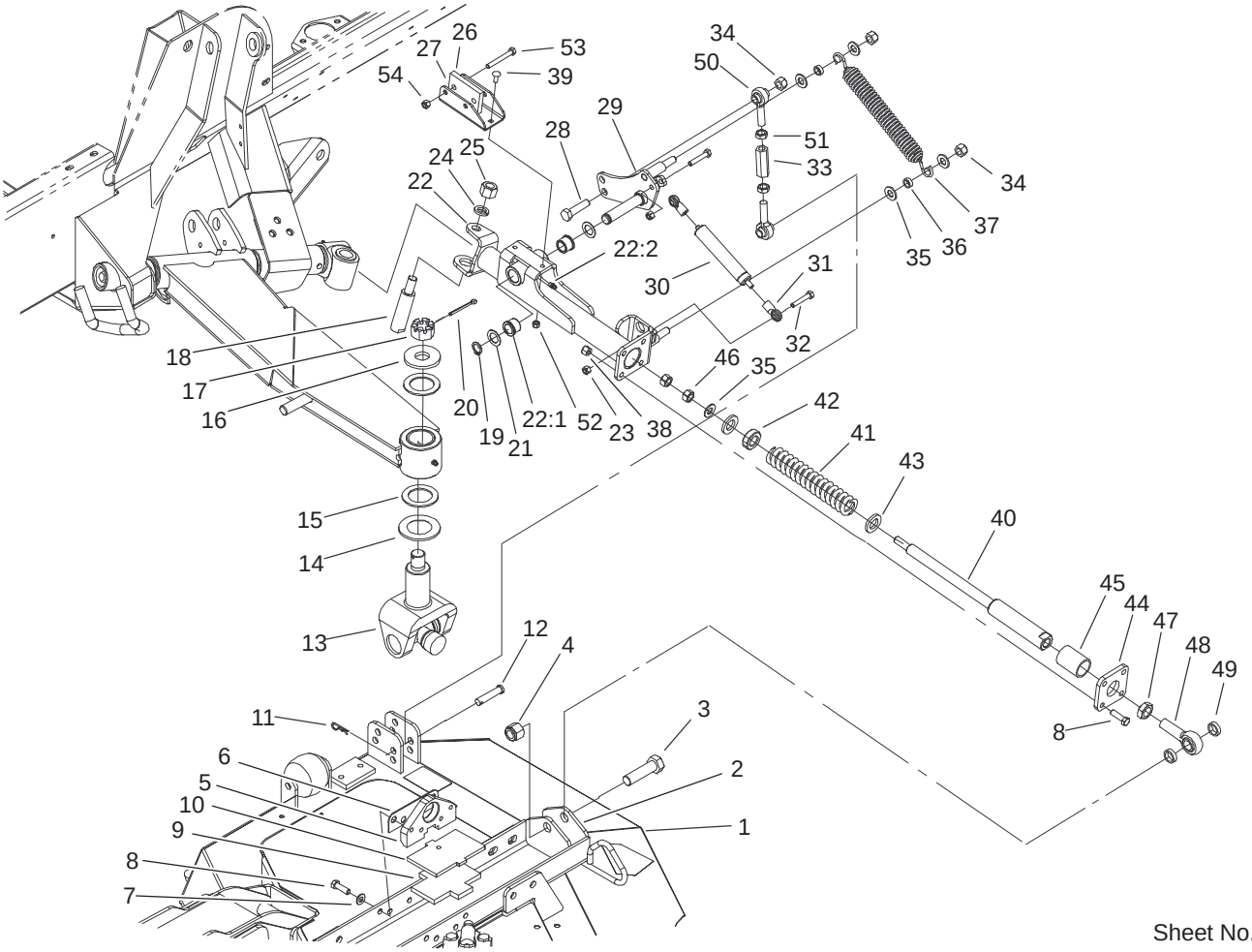

Sheet No.:14

Side Deck Lift Arm and Damper Assembly (Continued)

Ref. No.	Part No.	Qty.	Description
46	3217–9	4	Nut–HH
47	3220–7	2	Nut–Jam
48	105–2806	2	End–Rod
49	105–0756	4	Spacer
50	105–2808	4	End–Rod
51	3220–5	4	Nut–Jam
52	3296–42	4	Nut–Lock, NI
53	322–12	4	Screw–HH
54	3296–29	4	Nut–Lock, NI

Ref. No.	Part No.	Qty.	Description

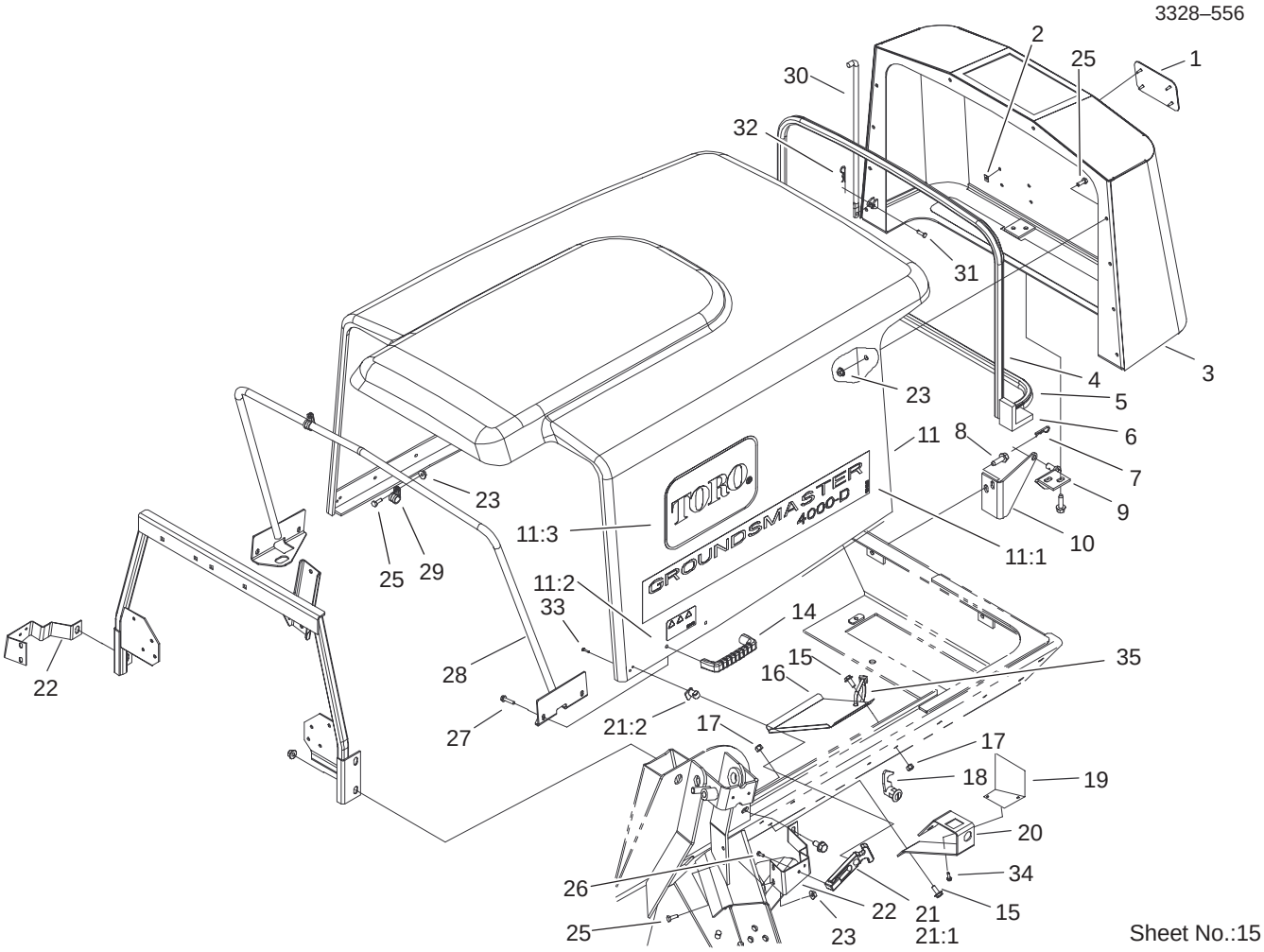

Hood and Screen Assembly

Ref. No.	Part No.	Qty.	Description
1	93–6028	1	Plate–Logo, Toro
2	94–2638	4	Nut–Tinnerman
3	100–5506–03	1	Screen ASM
4	104–2225	1	Seal–Bulb
5	104–3590	1	Seal–Bulb
6	104–3580	2	Seal–Corner, Screen
7	3290–467	2	Pin–Hair
8	32144–109	8	Screw
9	104–3589	2	Screen Pivot ASM
10	104–3588–03	2	Pivot–Screen
11	104–8338	1	Hood ASM
11:1	106–2045	2	Decal–Hood, Gm 4000
11:2	106–6754	1	Decal–Danger
11:3	66–1210	2	Decal–Logo, Toro
14	65–5100	2	Handle–Door
15	3234–5	4	Screw
16	104–3560–03	1	Deflector–Filter, Oil
17	32128–20	4	Nut–HF
18	98–5398	1	Latch
19	105–4531	1	Cover–Latch
20	104–3591–03	1	Bracket–Latch, Hood
21	94–5626	2	Latch–Draw, Flexible
21:1	100–5806	1	Handle–Latch
21:2	100–5807	1	Keeper–Latch
22	104–2255–03	1	Bracket–Latch, RH
22	104–2253–03	1	Bracket–Latch, LH

Ref. No.	Part No.	Qty.	Description
23	32128–33	16	Nut–HF
25	321–4	16	Screw–HH
26	32144–1	4	Screw–Taptite
27	46–8092	4	Screw–Plastite
28	104–3505–03	1	Hood Support ASM
29	2412–134	2	R–Clamp
30	104–8313	1	Rod–Hood
31	283–67	1	Pin–Clevis
32	3290–307	1	Pin–Hair
33	32104–4	2	Screw
34	32104–95	2	Screw–HWH
35	3290–378	1	Tie–Cable

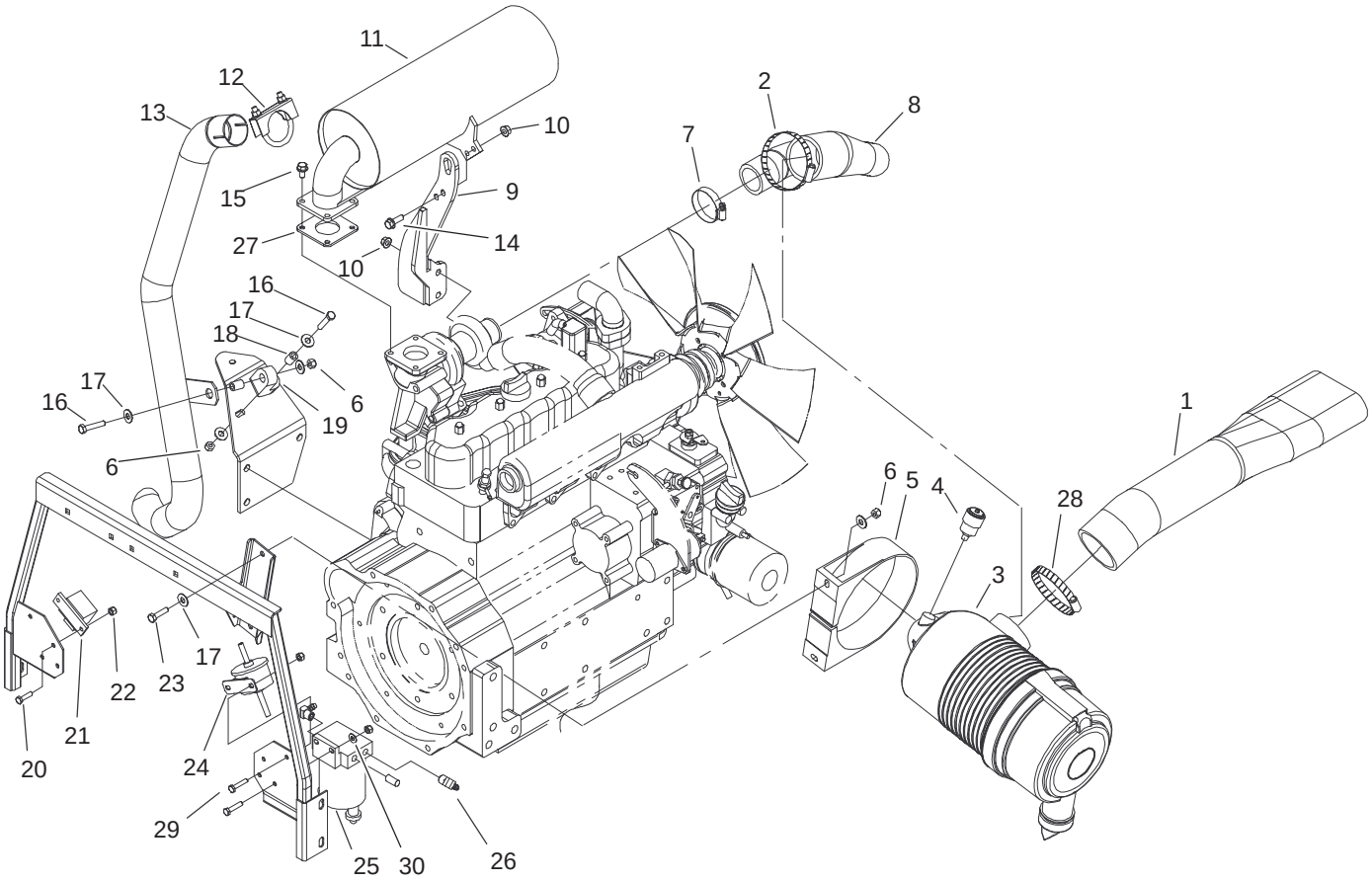

Sheet No.:16

Air Cleaner and Muffler Assembly

Ref. No.	Part No.	Qty.	Description
1	100–5550	1	Hose–Cleaner, Air
2	2412–110	1	Clamp–Hose
3	99–5410	1	Cleaner–Air
4	104–3563	1	Indicator
*4:1	94–1416	1	Indicator Adapter ASM
5	99–5414	1	Strap–Cleaner, Air
6	3296–29	4	Nut–Lock, NI
7	2412–92	1	Clamp–Hose
8	99–5415	1	Hose–Cleaner, Air
9	99–5421–03	1	Bracket–Mounting
10	33004–00	4	Nut–HF
11	99–5424	1	Muffler–Turbo
12	18–2130	1	Clamp–Column, Steering
13	100–5610	1	Pipe–Exhaust
14	33104–025	2	Screw–HHF
15	33104–016	4	Screw–HHF
16	322–9	2	Screw–HH
17	3256–3	8	Washer–Flat
18	93–5023	2	Spacer
19	95–5622	1	Hanger–Rubber
20	321–6	4	Screw–HH
21	66–8800	1	Relay
22	3296–42	6	Nut–Lock, NI
23	322–6	2	Screw–HH
24	104–5215	1	Pump–Fuel, Electric

Ref. No.	Part No.	Qty.	Description
25	98–9305	1	Filter–Water/Fuel
26	353–781	2	Fitting
27	100–9333	1	Gasket–Muffler
28	2412–125	1	Clamp–Hose
29	321–4	2	Screw–HH
30	3256–23	2	Washer–Flat

* Not illustrated

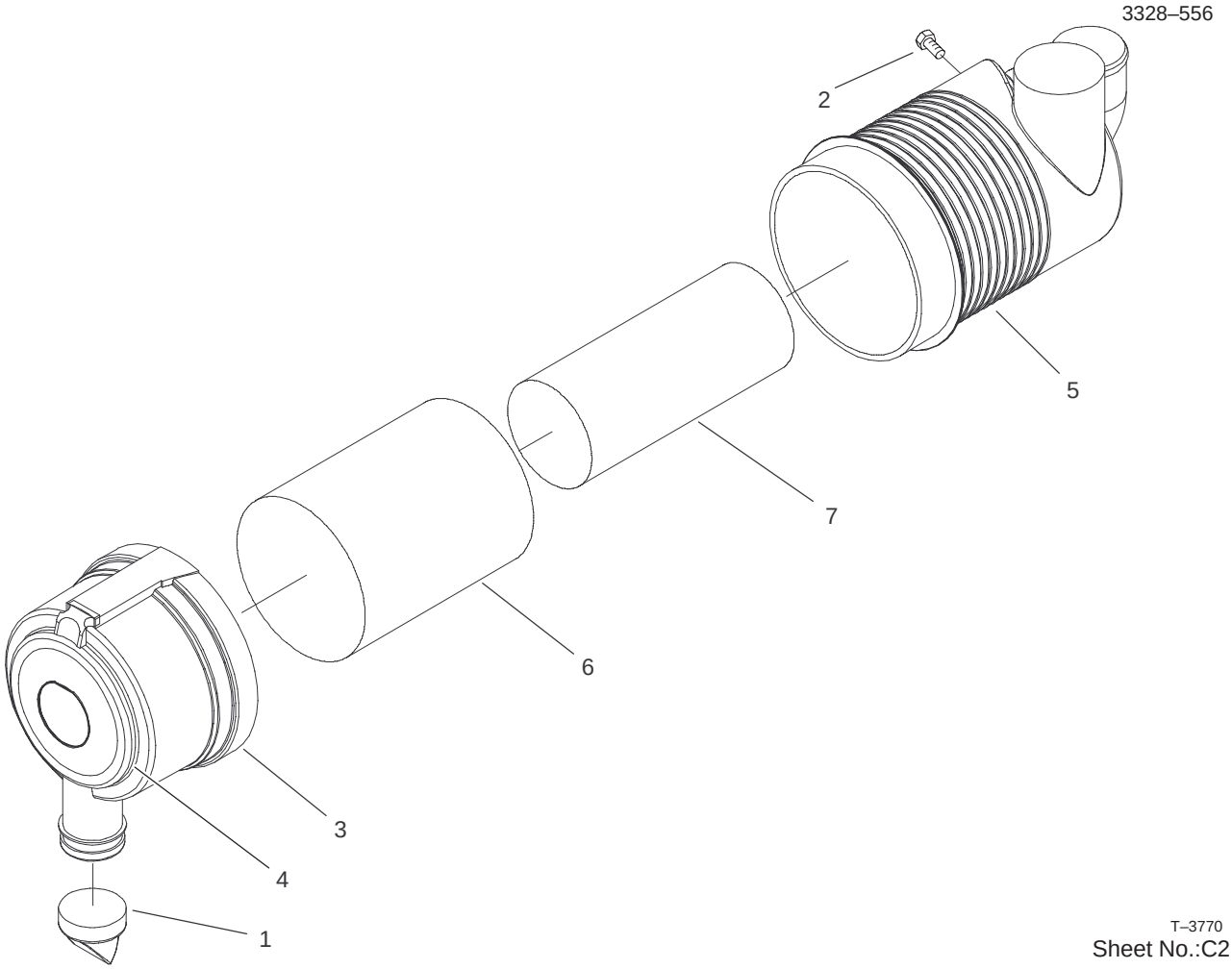

Sheet No.:C2

Air Cleaner Assembly No. 99–5410

Ref. No.	Part No.	Qty.	Description
1	104–4258	1	Valve–Vacuator
☆2		1	Plug–Pipe
3	104–4259	1	Cover ASM
☆4		1	Marking
☆5		1	Body ASM
6	104–4260	1	Element ASM
7	104–4261	1	Element ASM

Ref. No.	Part No.	Qty.	Description

☆ Not serviced separately

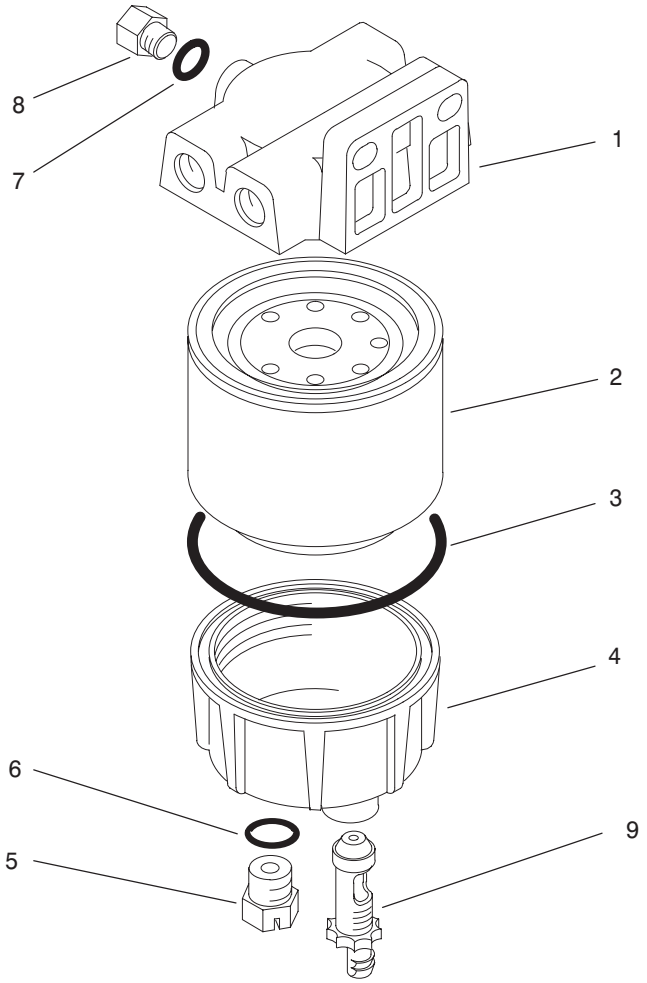

T–3330
Sheet No.:C3

Filter Assembly No. 98–9305

Ref. No.	Part No.	Qty.	Description
1	98–9772	1	Head–Filter
2	98–9764	1	Element
3	98–9774	1	O–Ring–Base, Filter
4	98–9775	1	Base–Filter
5	98–9773	1	Plug–Base, Filter
6	237–42	1	O–Ring
7	237–78	1	O–Ring
8	98–9776	1	Plug–Head, Filter
9	98–9777	1	Drain Valve ASM
10	285–22	2	Plug–Pipe

Ref. No.	Part No.	Qty.	Description

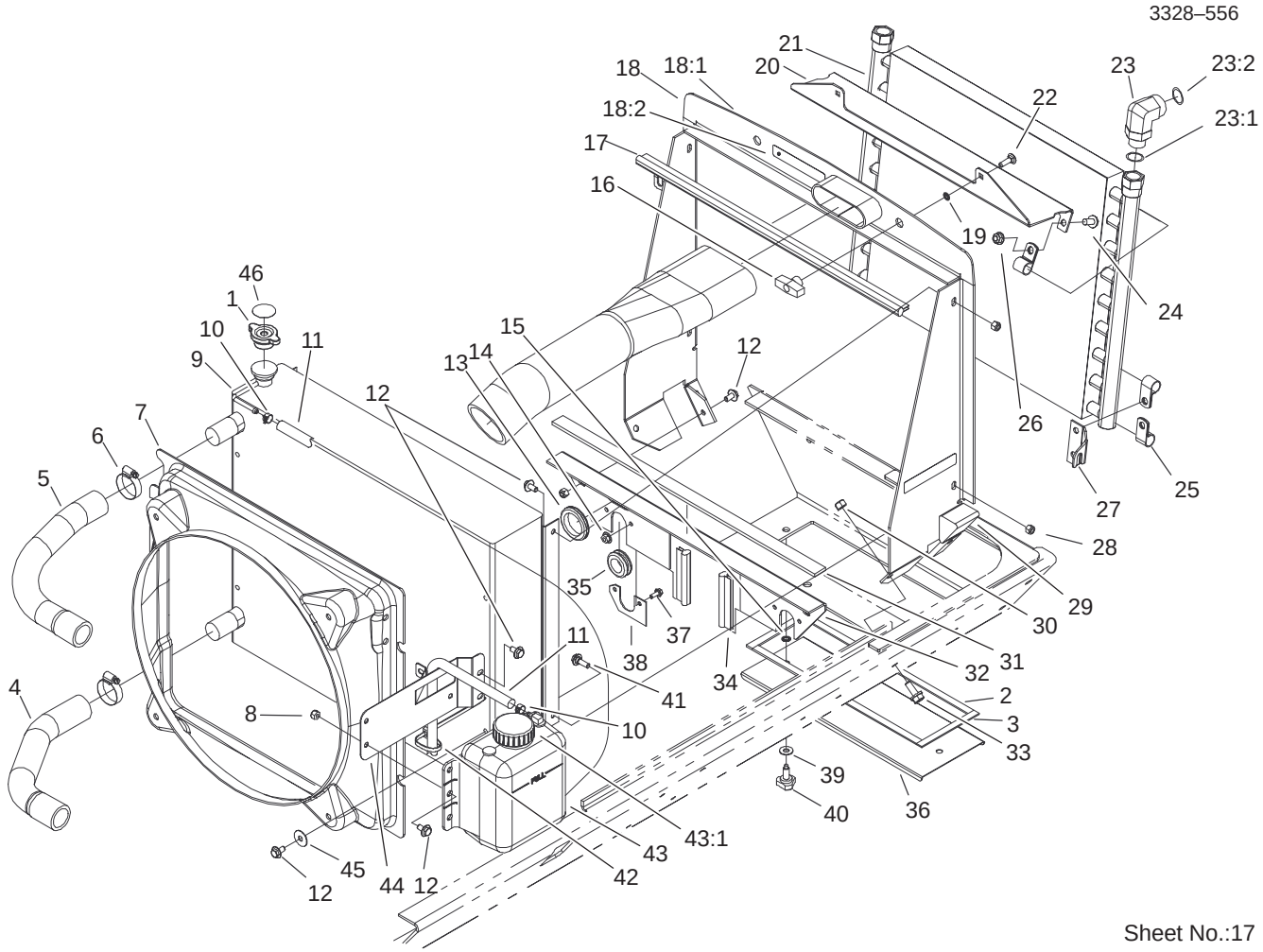

Sheet No.:17

Radiator, Oil Cooler and Support Assembly

Ref. No.	Part No.	Qty.	Description
1	93–5957	1	Cap–Radiator
2	105–0777	2	Strip–Foam
3	105–0778	2	Strip–Foam
4	100–5546	1	Hose–Radiator, Lower
5	100–5547	1	Hose–Radiator
6	2412–111	4	Clamp
7	99–5428	1	Shroud–Radiator
8	3296–29	5	Nut–Lock, NI
9	99–5426	1	Radiator
10	92–2379	3	Clamp–Hose
11	71–3370	2	Hose–Fuel
12	3234–7	14	Screw–HHF
13	240–3	1	Grommet–Rubber
14	32128–33	4	Nut–HF
15	32151–72	2	Ring–Retaining
16	98–7134	2	Knob–Handle
17	104–2223	1	Seal–Bulb
18	105–0757	1	Radiator Support ASM
18:1	93–7275	1	Decal–Fluid, Starting
18:2	93–7272	3	Decal–Warning
19	104–8310	2	Ring–Retaining
20	104–7522–03	1	Bracket–Cooler, Oil
21	99–5495	1	Cooler–Oil
22	3230–22	2	Screw–CARR
23	104–3796	2	Fitting–HYD, 90°
23:1	237–81	1	O–Ring

Ref. No.	Part No.	Qty.	Description
23:2	340–65	1	O–Ring
24	3234–1	6	Screw–HHF
25	2412–81	6	Clamp
26	104–8301	6	Nut–Flange, NI
27	100–3078–03	1	Bracket–Cooler, LH
27	100–3077–03	1	Bracket–Cooler, RH
28	104–8300	4	Nut–Flange, NI
29	93–5954	2	Foam–Plug
30	3296–39	4	Nut–Lock, NI
31	104–2226	1	Strip–Foam
32	99–5517–03	1	Support–Lower
33	3234–24	4	Screw–HHF
34	104–2224	2	Seal–Bulb
35	237–165	2	Grommet
36	104–2287–03	1	Cover–Frame
37	3234–33	4	Screw–HHF
38	104–8311	2	Plate
39	3256–3	2	Washer–Flat
40	95–9648	2	Knob
41	28–0540	2	Bolt–Shoulder
42	3290–378	1	Tie–Cable
43	104–2276	1	Reservior–Coolant
43:1	87–7050	1	Cap–Reservoir
44	100–5505–03	1	Bracket–Tank
45	3256–35	4	Washer–Flat
46	106–6755	1	Decal–Radiator Cap

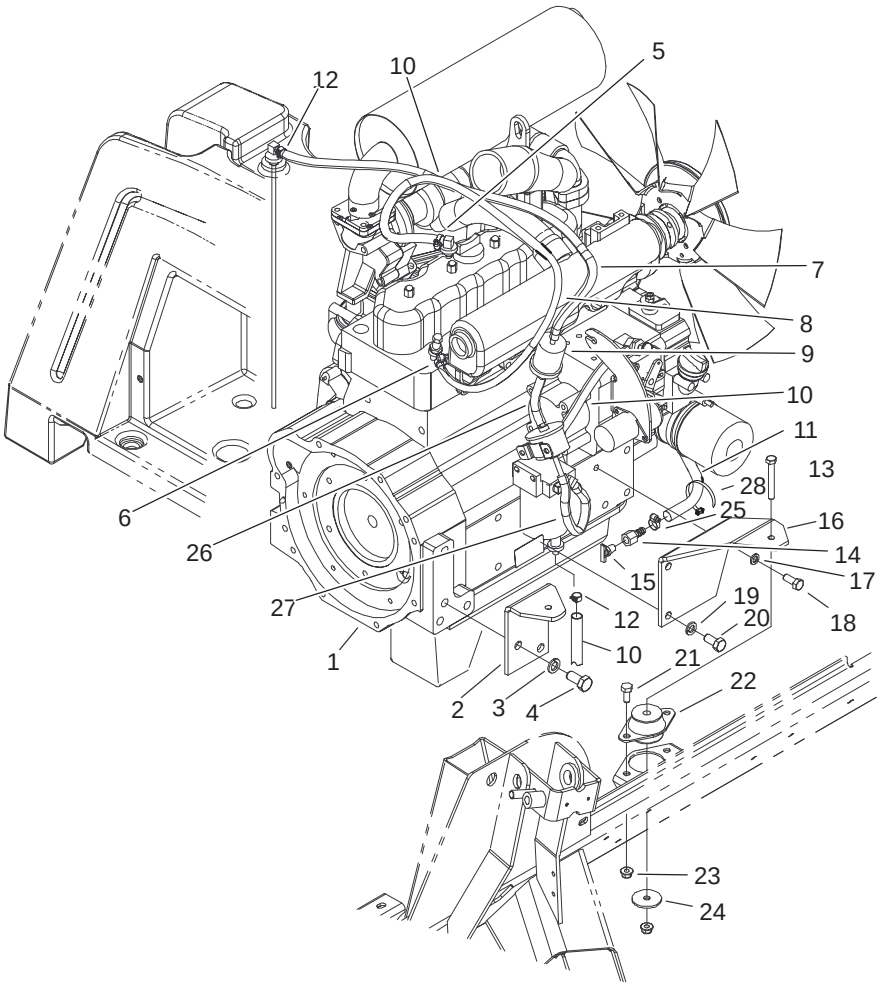

Sheet No.:18

Engine and Mount Assembly

Ref. No.	Part No.	Qty.	Description
1	99–5413	1	Engine–Turbo, Kubota
2	100–3147–03	1	Mount–Engine, LH
2	100–3148–03	1	Mount–Engine, RH
3	43–5950	4	Washer–Lock, Spring
4	43–3210	4	Screw–HH
5	2412–108	1	Clamp–Worm
6	2412–80	1	Clamp–Line, Fuel
7	63–7630	1	Hose–Fuel
8	75–4706	1	Hose–Fuel
9	98–7612	1	Filter–Fuel
10	19–3250	2	Hose–Fuel
11	99–7376	1	Hose–Breather
12	92–2379	9	Clamp–Hose
13	323–14	4	Screw–HH
14	354–94	1	Hose–Female, Barbed
15	93–5528	1	Fitting–Cock, Drain
16	106–2049–03	1	Mount–Engine, LH
16	106–2048–03	1	Mount–Engine, RH
17	48–9590	1	Washer–Lock
18	43–0090	1	Screw–HH
19	48–8070	5	Washer–Lock
20	42–9250	5	Bolt
21	323–5	8	Screw–HH
22	53–9682	4	Rubber–Support, Engine
23	104–8301	12	Nut–Flange, NI

Ref. No.	Part No.	Qty.	Description
24	63–7400	4	Washer–Rebound
25	2412–108	2	Clamp–Worm
26	27–5350	1	Hose–Fuel
27	63–9640	1	Hose–Fuel
28	3290–379	1	Tie–Cable
29	3290–378	1	Tie–Cable

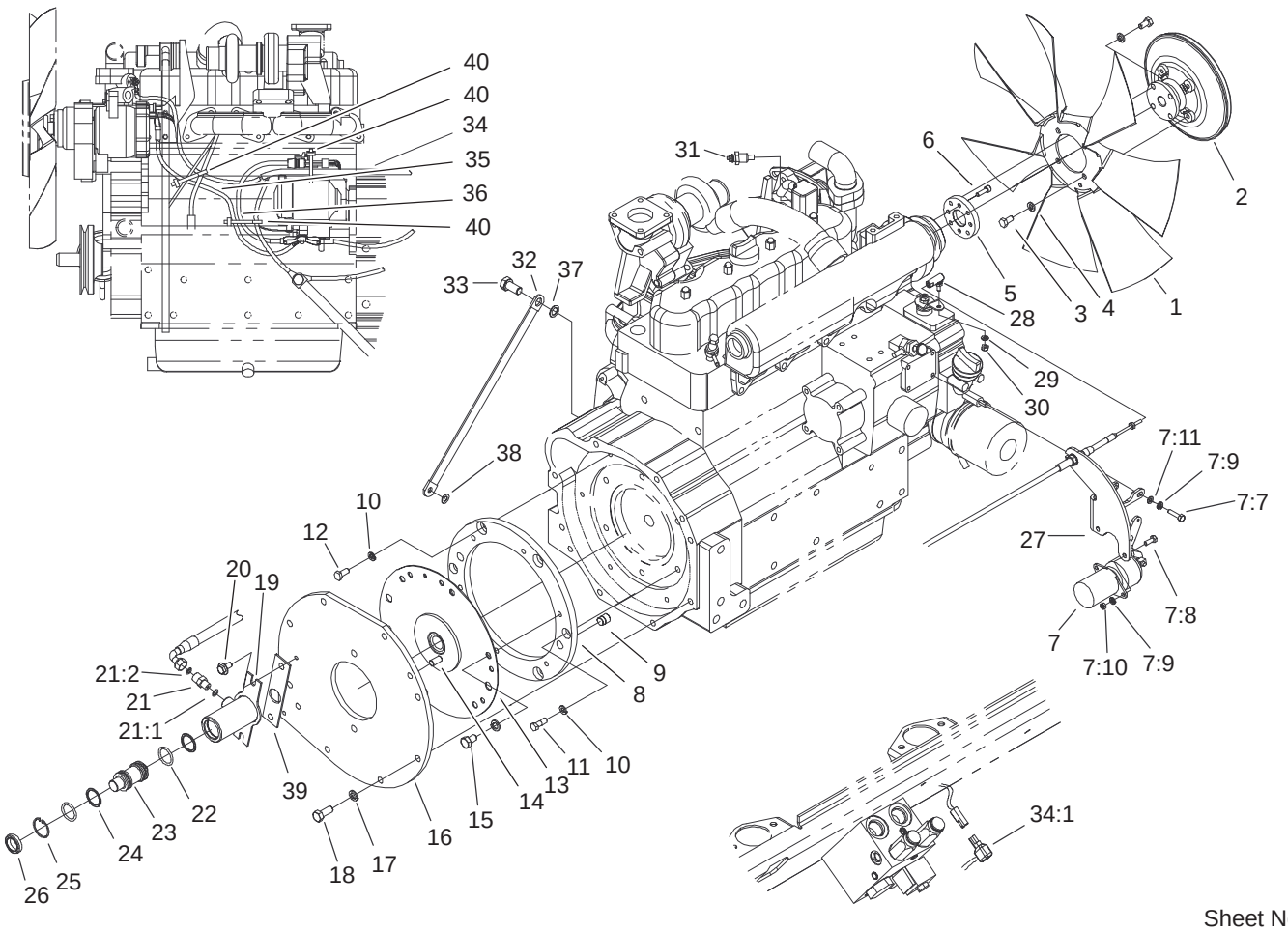

Sheet No.:19

Fan Drive and Flywheel Assembly

Ref. No.	Part No.	Qty.	Description
1	105–0750	1	Fan
2	104–2212	1	Clutch–Fan
3	322–2	8	Screw–HH
4	3253–4	8	Washer–Lock
5	100–3066	1	Adapter–Fan
6	52–6290	4	Screw–HH
7	98–3817	1	Solenoid Kit
7:7	33113–025	3	Screw–HH
7:8	33113–016	2	Screw–HH
7:9	48–8020	5	Washer–Spring
7:10	33013–00	2	Nut–Hex
7:11	33093–00	3	Washer–Flat
7:12	3272–2	1	Pin–Cotter
8	100–5633	1	Spacer–Coupling
9	58–3590	2	Dowel
10	42–9850	6	Washer–Lock, Spring
11	100–5634	2	Bolt–Shoulder
12	33114–020	4	Screw–HH
13	92–1753	1	Coupling–Spring
14	100–5635	2	Pin–Plate
15	70–8470	6	Screw–HH
16	100–5632–03	1	Plate–Adapter
17	48–9590	14	Washer–Lock
18	43–0090	8	Screw–HH
19	104–2291	1	Cylinder ASM
20	3234–5	2	Screw

Ref. No.	Part No.	Qty.	Description
21	340–92	1	Fitting–HYD, Straight
21:1	237–78	1	O–Ring
21:2	237–21	1	O–Ring
22	237–185	2	O–Ring
23	104–2295	1	Piston–Cylinder
24	104–2296	2	Ring–Back Up
25	32151–51	1	Ring–Retaining
26	104–8304	1	Seal–Grease
27	104–7540–03	1	Support–Cable
28	2411–38	1	Joint–Ball
29	3256–51	1	Washer–Flat
30	3296–21	1	Nut–Lock, NI
31	98–9346	1	Sender–Temperature
32	18–2770	1	Cable–Ground
33	42–9250	1	Bolt
34	100–5553	1	Harness–Wire, Engine
34:1	100–4918	3	Diode
35	100–5552	1	Harness–Wire
36	99–3441	1	Harness–Wire, Fusible Link
37	3255–2	1	Washer–Lock/Ext
38	3255–8	1	Washer–Lock
39	105–3238–03	2	Plate–Shim
40	3290–378	3	Tie–Cable

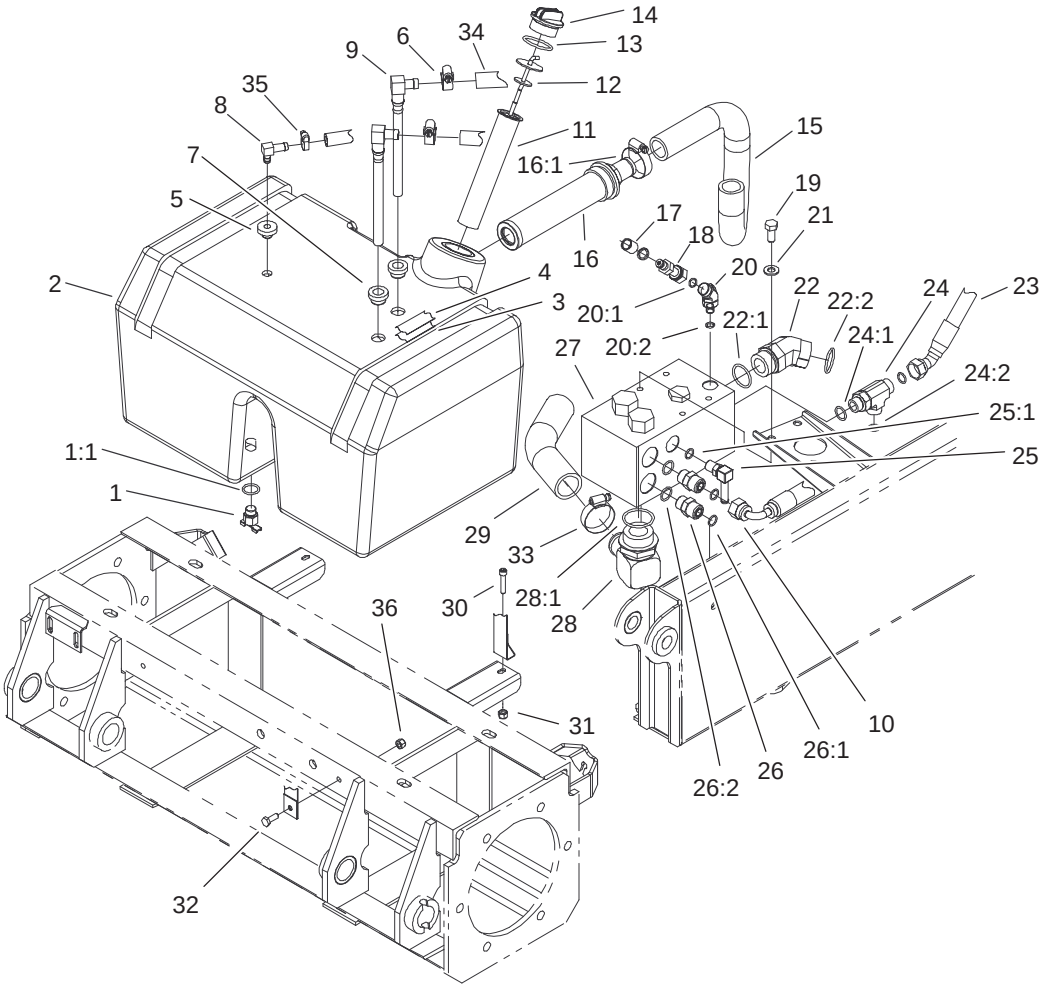

Sheet No.:20

Hydraulic Reservoir and Filter Assembly

Ref. No.	Part No.	Qty.	Description
1	104–8334	1	Petcock
1:1	237–42	1	O–Ring
2	104–0703	1	Reservoir–HYD
3	93–5273	2	Strap–Felt
4	104–0794	2	Strap
5	46–6560	1	Bushing
6	2412–36	2	Clamp–Hose
7	104–0790	2	Bushing
8	46–6550	1	Fitting–HYD, 90°
9	104–0791	2	Pipe–Stand
10	100–5522	1	Hose ASM
11	61–2790	1	Filter–Screen
12	105–2812	1	Dipstick ASM
13	94–8166	1	O–Ring
14	93–7498	1	Plug–Plastic
15	100–5528	1	Hose–Suction
16	104–7546	1	Strainer–Tank
16:1	340–136	1	O–Ring
17	354–79	1	Cap–Dust, Yellow
18	86–5480	1	Nipple–Test
19	323–5	3	Screw–HH
20	340–54	1	Elbow–45°
20:1	237–22	1	O–Ring
20:2	237–78	1	O–Ring
21	3256–24	3	Washer–Flat
22	104–3509	1	Fitting–HYD, 45°

Ref. No.	Part No.	Qty.	Description
22:1	237–146	1	O–Ring
22:2	340–65	1	O–Ring
23	100–5521	1	Hose ASM
24	340–109	1	Fitting–HYD, Tee
24:1	237–79	1	O–Ring
24:2	237–30	2	O–Ring
25	354–135	1	Fitting–HYD, 90°
25:1	237–42	1	O–Ring
26	340–4	2	Adapter
26:1	237–30	1	O–Ring
26:2	237–79	1	O–Ring
27	100–5558	1	Manifold–Filter
28	92–7526	1	Fitting–HYD, 90°
28:1	237–101	1	O–Ring
29	104–0728	1	Hose–Filter
30	3274–51	2	Screw–HSH
31	3296–42	2	Nut–Lock, NI
32	321–4	2	Screw–HH
33	2412–111	2	Clamp
34	100–5592	1	Hose
35	2412–108	1	Clamp–Worm
36	32128–33	2	Nut–HF

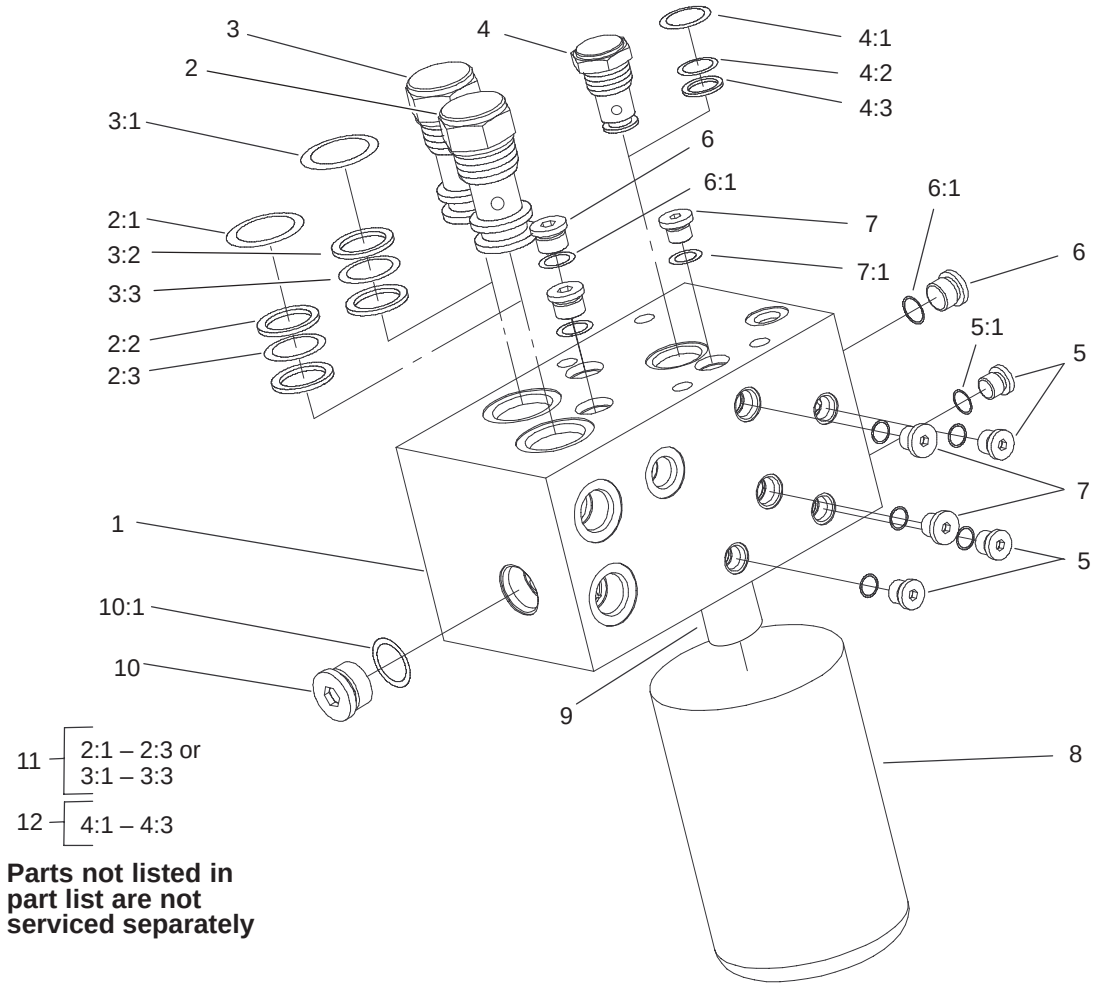

Parts not listed in part list are not serviced separately

T–3771
Sheet No.:C4

Filter Manifold Assembly No. 100–5558

Ref. No.	Part No.	Qty.	Description
☆1		1	Manifold
2	104–4292	1	Valve–Check
3	104–4293	1	Valve–Check
4	104–4294	1	Valve–Check
5	353–990	4	Plug
5:1	237–78	1	O–Ring
6	353–989	3	Plug–Hex, Hollow
6:1	237–42	1	O–Ring
7	354–137	1	Plug
7:1	237–86	1	O–Ring
8	94–2621	1	Element–Filter
☆9		1	Nipple–Filter
10	354–70	1	Plug–Hex, Hollow
10:1	237–80	1	O–Ring
11	99–5504	2	Seal Kit
12	99–5503	1	Seal Kit

Ref. No.	Part No.	Qty.	Description

☆ Not serviced separately

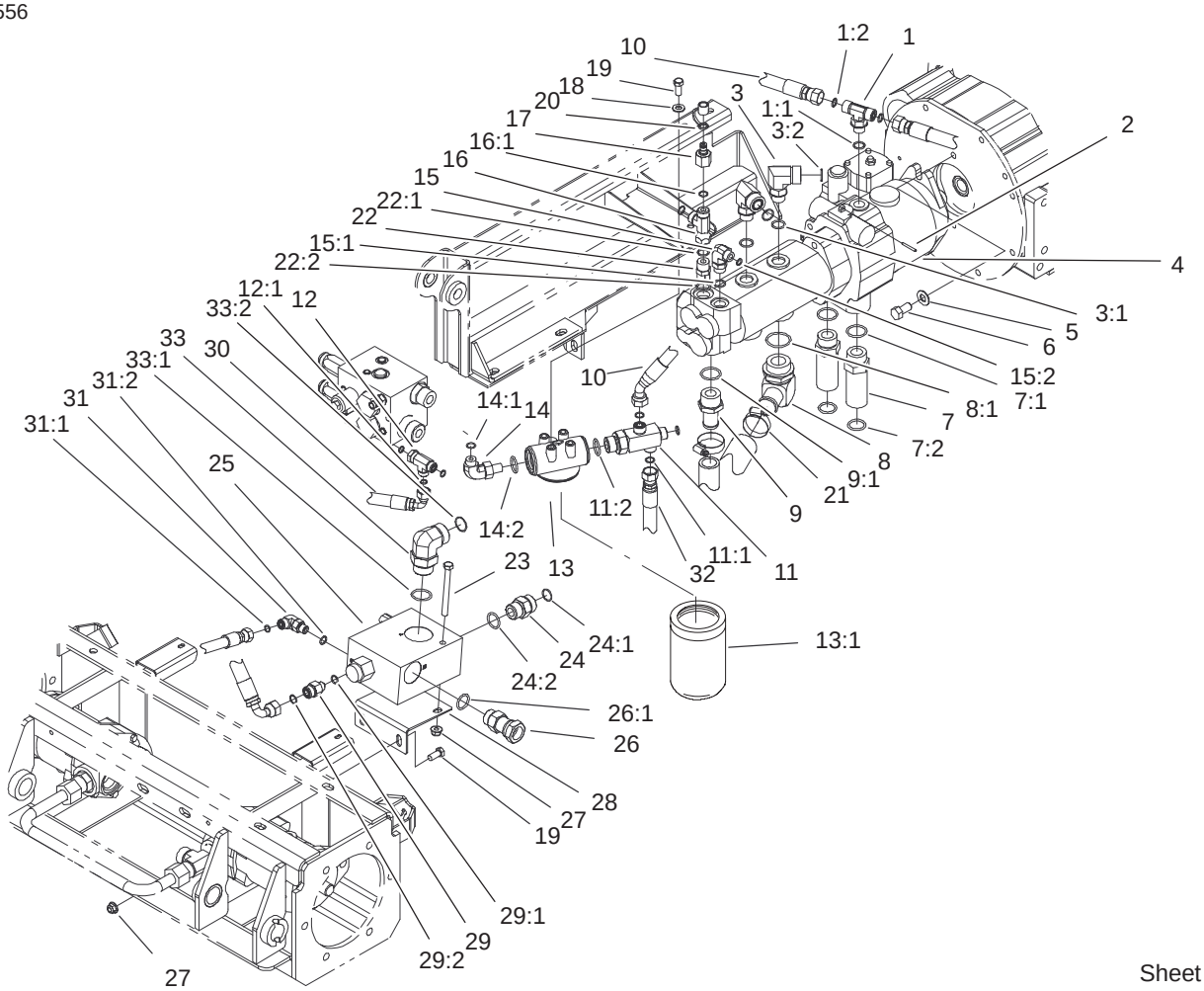

Sheet No.:21

Pump Installation and Filter Assembly

Ref. No.	Part No.	Qty.	Description
1	340–157	1	Fitting–HYD
1:1	237–79	1	O–Ring
1:2	237–30	2	O–Ring
2	32121–77	1	Pin–Roll
3	340–16	2	Fitting–HYD, 90°
3:1	237–80	1	O–Ring
3:2	237–58	1	O–Ring
4		1	Pump ASM
5	3256–26	2	Washer–Flat
6	3213–1	2	Screw–HH
7	100–5565	2	Fitting–HYD
7:1	237–146	1	O–Ring
7:2	340–65	1	O–Ring
8	92–7526	1	Fitting–HYD, 90°
8:1	237–101	1	O–Ring
9	354–78	1	Connector–Hose
9:1	237–146	1	O–Ring
10	100–5521	1	Hose ASM
11	106–4318	1	Fitting–Special
12	340–115	1	Fitting–Tee
12:1	237–22	2	O–Ring
13	93–2242	1	Oil Filter ASM
13:1	75–1310	1	Element–Filter
14	340–131	1	Elbow–90°
14:1	237–30	1	O–Ring
14:2	237–81	1	O–Ring

Ref. No.	Part No.	Qty.	Description
15	340–18	1	Fitting–HYD, 90°
15:1	237–79	1	O–Ring
15:2	237–22	1	O–Ring
16	340–104	1	Tee–Fitting
16:1	237–30	2	O–Ring
17	100–5616	1	Fitting–HYD
18	3256–24	2	Washer–Flat
19	323–5	4	Screw–HH
20	354–79	1	Cap–Dust, Yellow
21	2412–111	2	Clamp
22	340–6	1	Fitting–HYD, Straight
22:1	237–30	1	O–Ring
22:2	237–80	1	O–Ring
23	323–42	1	Screw–HH
24	340–9	1	Fitting–Straight
24:1	237–58	1	O–Ring
24:2	237–81	1	O–Ring
25	105–4516	1	Manifold–Traction
26	106–2009	1	Fitting–HYD, Swivel
26:1	237–81	1	O–Ring
27	104–8301	3	Nut–Flange, NI
28	105–3232–03	1	Bracket–Valve
29	340–5	1	Fitting–Straight
29:1	237–42	1	O–Ring
29:2	237–30	1	O–Ring
30	66–8490	1	HYD Hose ASM

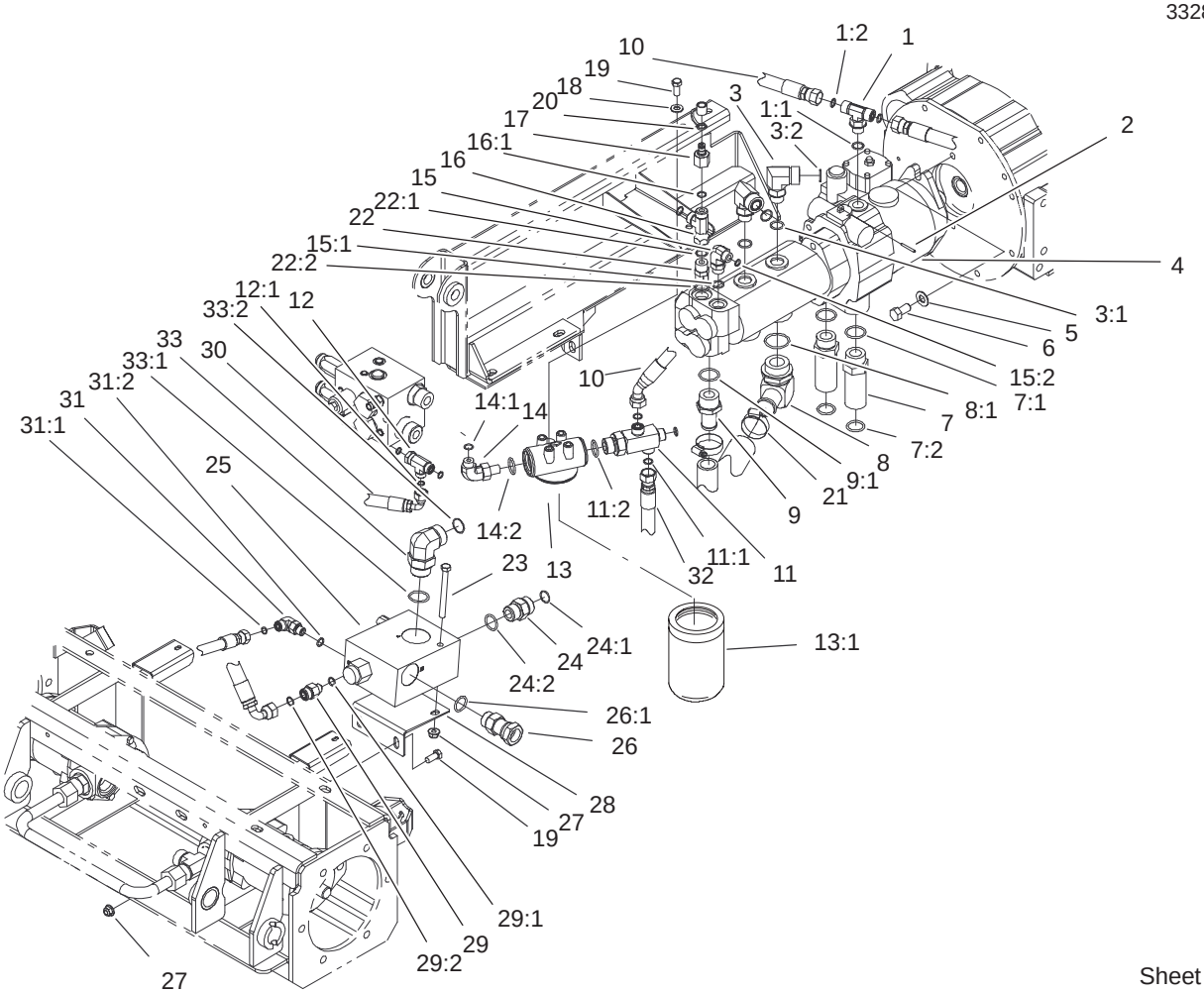

Sheet No.:21

Pump Installation and Filter Assembly (Continued)

Ref. No.	Part No.	Qty.	Description
31	340–77	1	Fitting–HYD, 90°
31:1	237–22	1	O–Ring
31:2	237–42	1	O–Ring
32	95–3738	1	HYD Hose ASM
33	340–129	1	Fitting–HYD, 90°
33:1	237–146	1	O–Ring
33:2	340–65	1	O–Ring

Ref. No.	Part No.	Qty.	Description

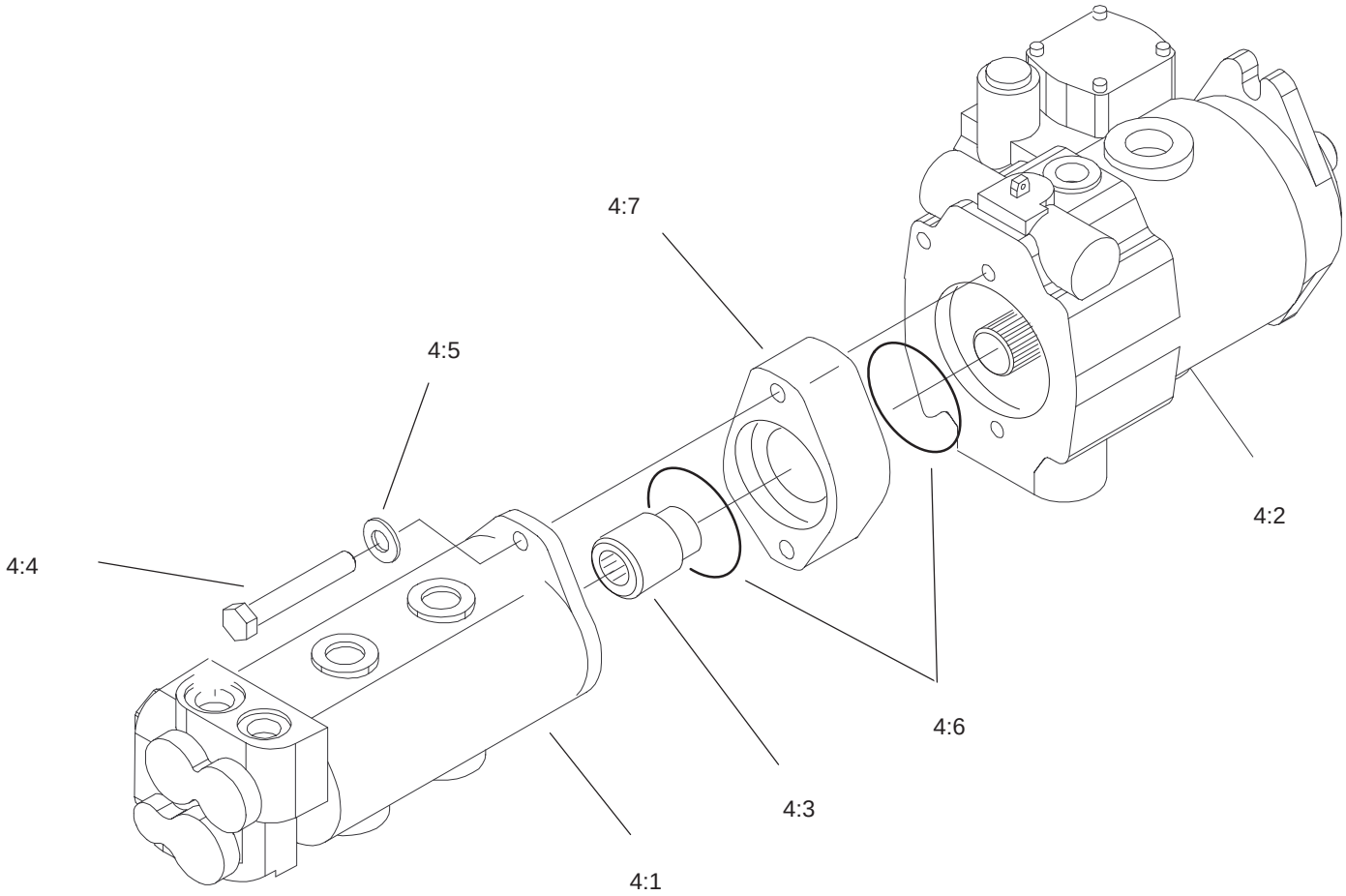

Sheet No.:C5

Pump Assembly No. 105–4566

Ref. No.	Part No.	Qty.	Description
1	100–3051	1	Gear Pump ASM
2	105–4567	1	Pump–Piston
3	74–9030	1	Coupler
4	323–32	2	Screw–HH
5	60–3540	2	Washer
6	60–3520	2	O–Ring
7	99–5510	1	Spacer

Ref. No.	Part No.	Qty.	Description

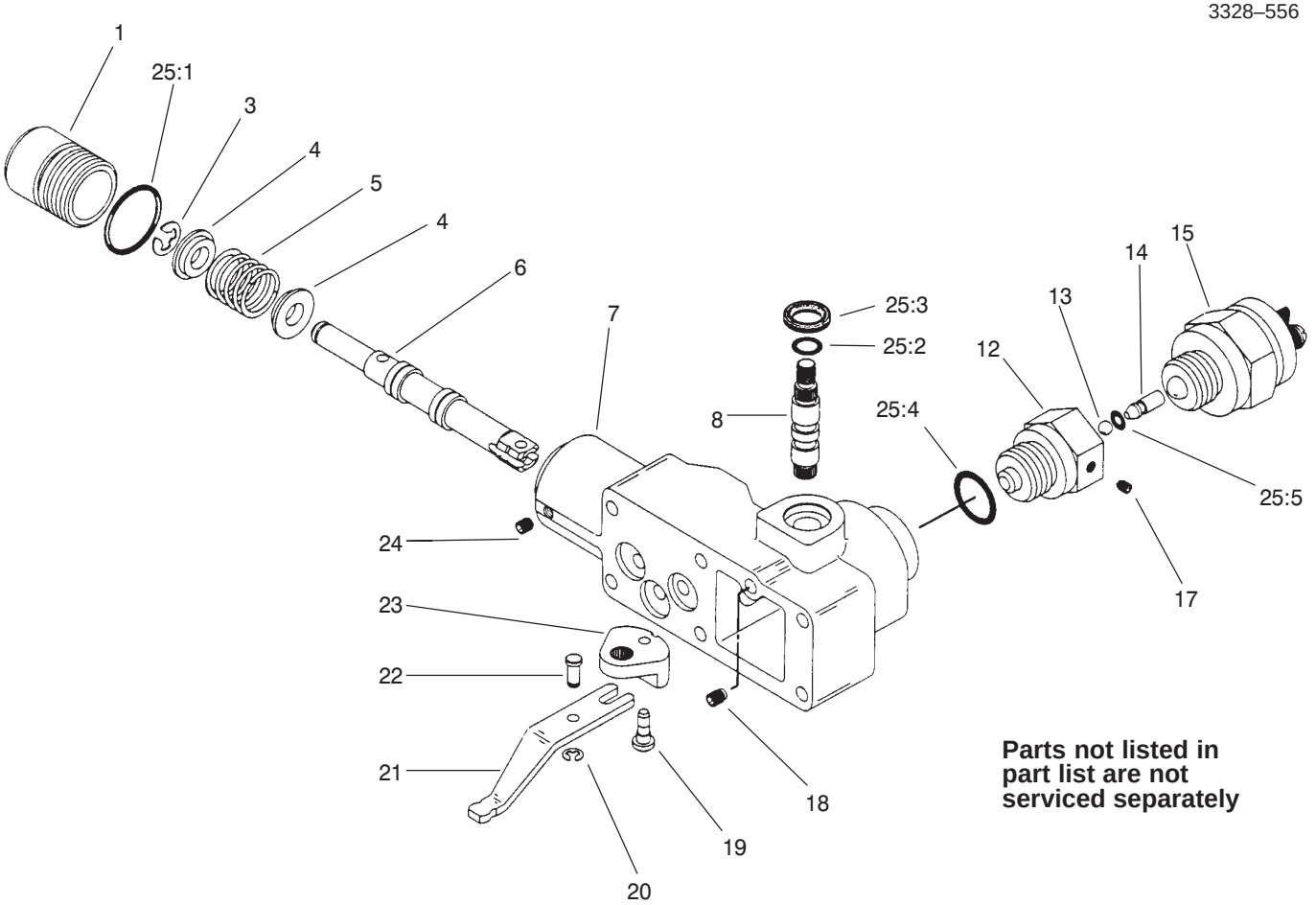

T–2119–1

Sheet No.:C8

Manual Servo Control Assembly No. 93–6306

Ref. No.	Part No.	Qty.	Description
☆1		1	Plug
☆3		1	Ring–Retaining
☆4		2	Retainer–Spring
☆5		1	Spring
☆6		1	Valve–Spool
☆7		1	Housing–Control
☆8		1	Shaft–Input
☆12		1	Adaptor
☆13		1	Ball
☆14		1	Pin
15	94–3043	1	Switch–Safety, Neutral
☆17		1	Screw–Set
☆18		1	Screw–Set
☆19		1	Pin
☆20		1	Ring–Retaining
☆21		1	Link
☆22		1	Pin–Dowel
☆23		1	Crank–Bell
☆24		1	Screw–Set
25	94–3044	1	Seal Kit
☆25:1		1	O–Ring
☆25:2		1	O–Ring
☆25:3		1	Seal–Wiper
☆25:4		1	O–Ring
☆25:5		1	O–Ring

Ref. No.	Part No.	Qty.	Description

☆ Not serviced separately

Gear Pump Assembly No. 100–3051

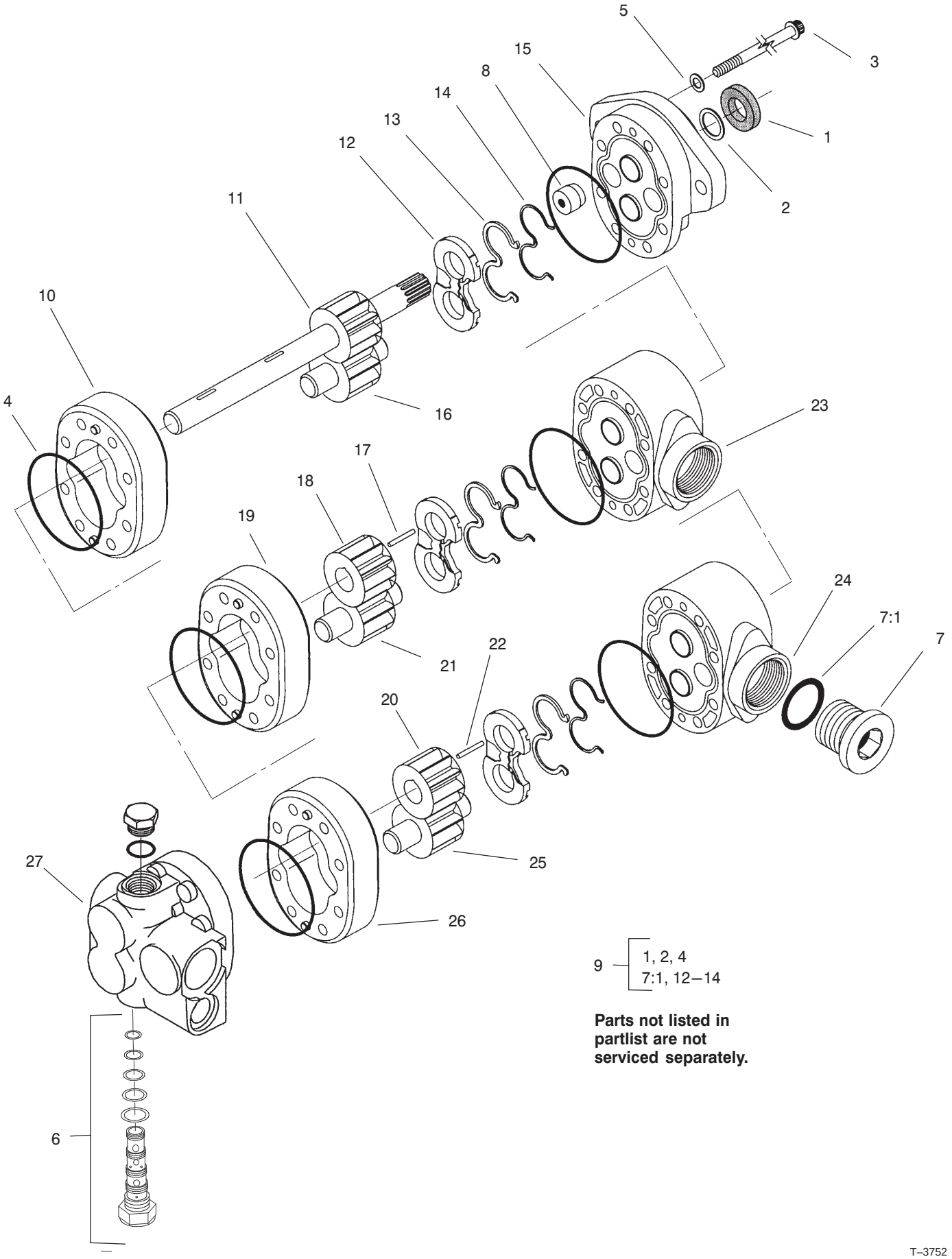

Parts not listed in partlist are not serviced separately.

T–3752

Sheet No.:C6

Gear Pump Assembly No. 100–3051

Ref. No.	Part No.	Qty.	Description
1	49–2640	1	Seal–Shaft
2	60–5890	1	Washer
3	105–2867	8	Capscrew
4	105–2866	6	O–Ring
5	74–8920	4	Washer–Copper
6	105–2870	1	Valve–Proportional
7	94–3013	1	Plug
☆7:1		1	O–Ring
8	94–3011	1	Plug
9	105–2868	1	Seal Kit
☆10		1	Body
☆11		1	Drive Gear ASM
☆12		3	Plate–Wear
☆13		3	Seal–Pressure, Balance
☆14		3	Gasket–Backup
☆15		1	Front Plate ASM
☆16		1	Gear–Idler
☆17		1	Key
☆18		1	Gear
☆19		1	Body
☆20		1	Gear
☆21		1	Gear–Idler
☆22		1	Key
☆23		1	Plate–Adaptor
☆24		1	Plate–Adaptor
☆25		1	Gear–Idler
☆26		1	Body
☆27		1	Backplate ASM

Ref. No.	Part No.	Qty.	Description

☆ Not serviced separately

Piston Pump Assembly No. 105–4567

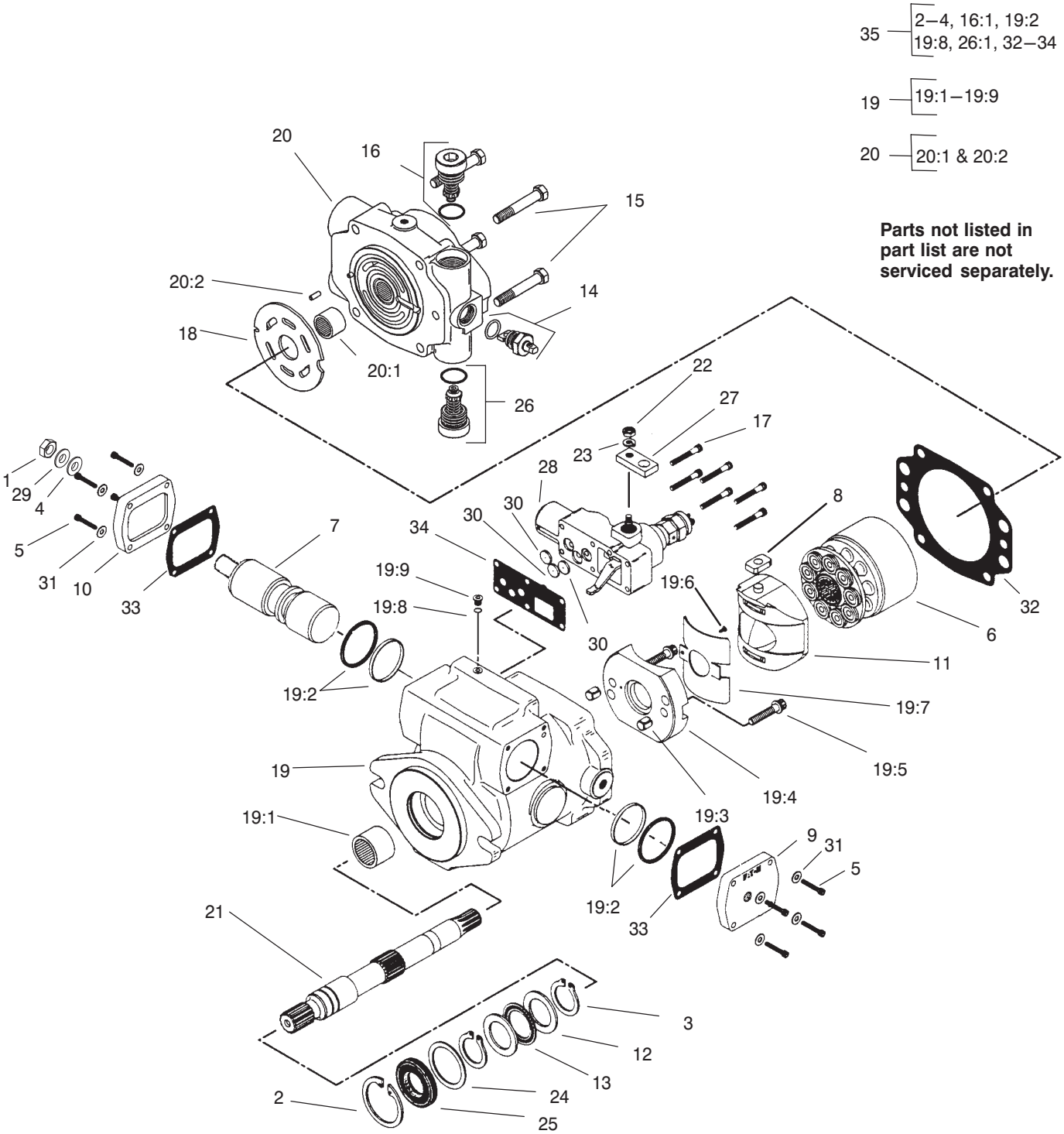

T–3833
Sheet No.:C7

Piston Pump Assembly No. 105–4567

Ref. No.	Part No.	Qty.	Description
1	3220–2	1	Nut
2	76–7010	1	Ring–Retaining
3	76–7000	2	Ring–Retaining
4	94–3027	1	Washer–Seal
5	3274–81	8	Screw–HSH
6	93–6322	1	Rotating Kit
7	105–4572	1	Servo Piston ASM
8	94–3032	1	Follower–Piston
9	94–3033	1	Plate–Cover
10	94–3034	1	Plate–Cover
11	94–3026	1	Camplate ASM
12	76–6950	2	Race–Thrust
13	76–6960	1	Bearing–Thrust
14	105–2864	1	Valve–Bypass
☆14:1		1	O–Ring
15	323–45	4	Screw–HH
16	105–2857	1	Valve–Relief
☆16:1		1	O–Ring
17	3274–59	6	Screw–HSH
18	94–3022	1	Plate–Valve
19	105–2859	1	Housing ASM
☆19:1		1	Bearing
☆19:2		2	Seal
☆19:3		2	Dowel–Bushing
☆19:4		1	Cradle ASM
☆19:5		2	Screw
☆19:6		1	Screw
☆19:7		1	Bushing
☆19:8		1	O–Ring
☆19:9		1	Plug
20	105–2860	1	Backplate ASM
☆20:1		1	Bearing
☆20:2		1	Pin–Roll
21	105–2861	1	Shaft–Drive
22	3217–5	1	Nut–Hex
23	3253–3	1	Washer–Lock
24	94–3007	1	Washer
25	105–3331	1	Seal–Shaft
26	105–2858	1	Valve–Relief
☆26:1		1	O–Ring
27	105–2862	1	Arm–Control
28	93–6306	1	Control ASM
29	94–3030	1	Washer
30	105–2863	3	Orifice
31	3256–77	8	Washer–Flat
☆32		1	Gasket–Housing
☆33		2	Gasket–Plate,Cover
☆34		1	Gasket
35	105–3349	1	Seal Kit

Ref. No.	Part No.	Qty.	Description

☆ Not serviced separately

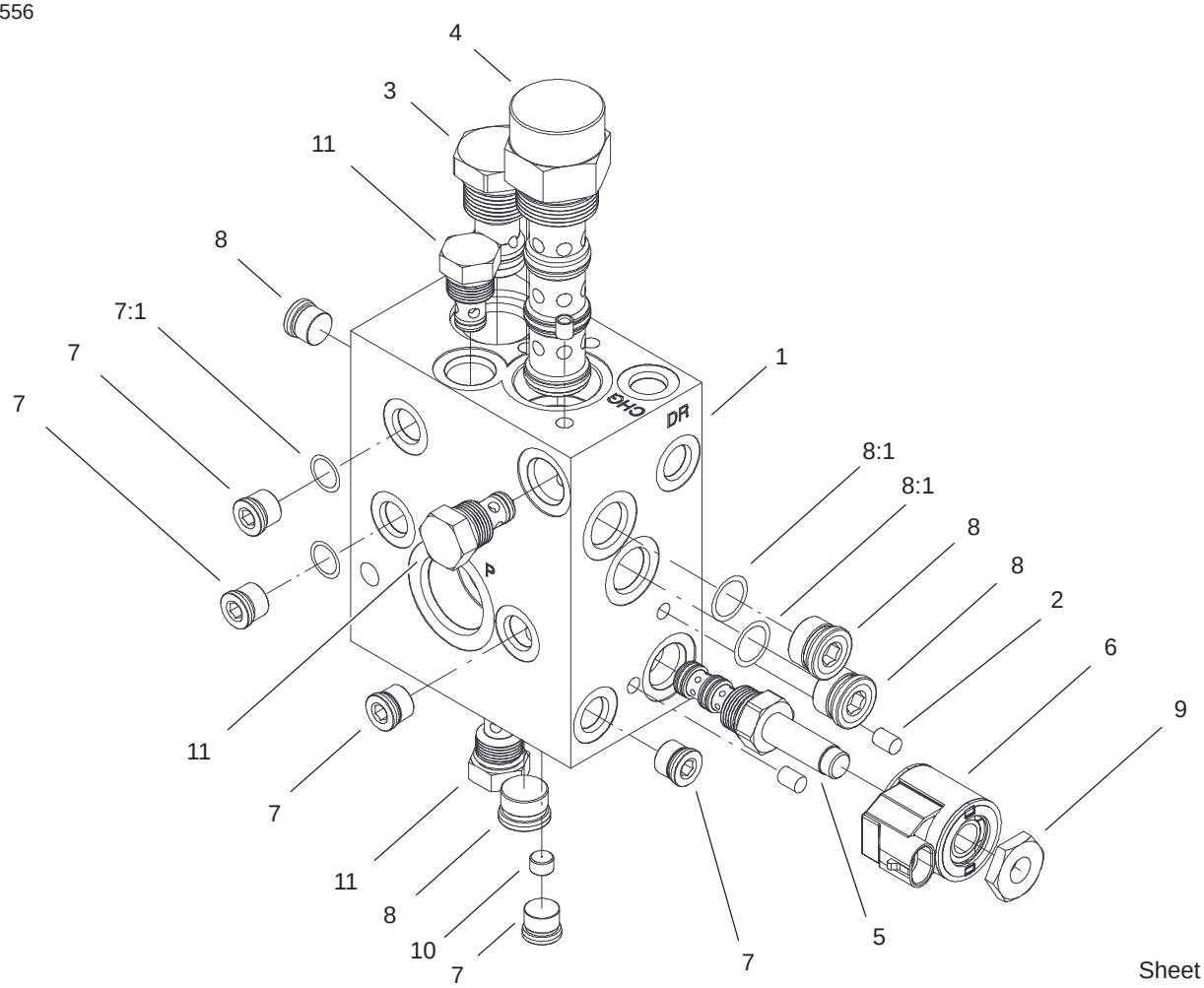

Sheet No.:C9

Traction Manifold Assembly No. 105–4516

Ref. No.	Part No.	Qty.	Description
☆1		1	Manifold
☆2		13	Plug
3	106–1997	1	Flow Divider
4	106–1996	1	Valve–Piloted Directional
5	106–1995	1	Valve–3 Way
6	105–9333	1	E–Coil
7	353–989	6	Plug–Hex, Hollow
7:1	237–42	1	O–Ring
8	353–988	3	Plug–Hex, Hollow
8:1	237–79	1	O–Ring
9	105–9332	1	Nut, E–Coil
10	105–9326	1	Orifice
11	105–9321	3	Valve–Check

Ref. No.	Part No.	Qty.	Description

☆ Not serviced separately

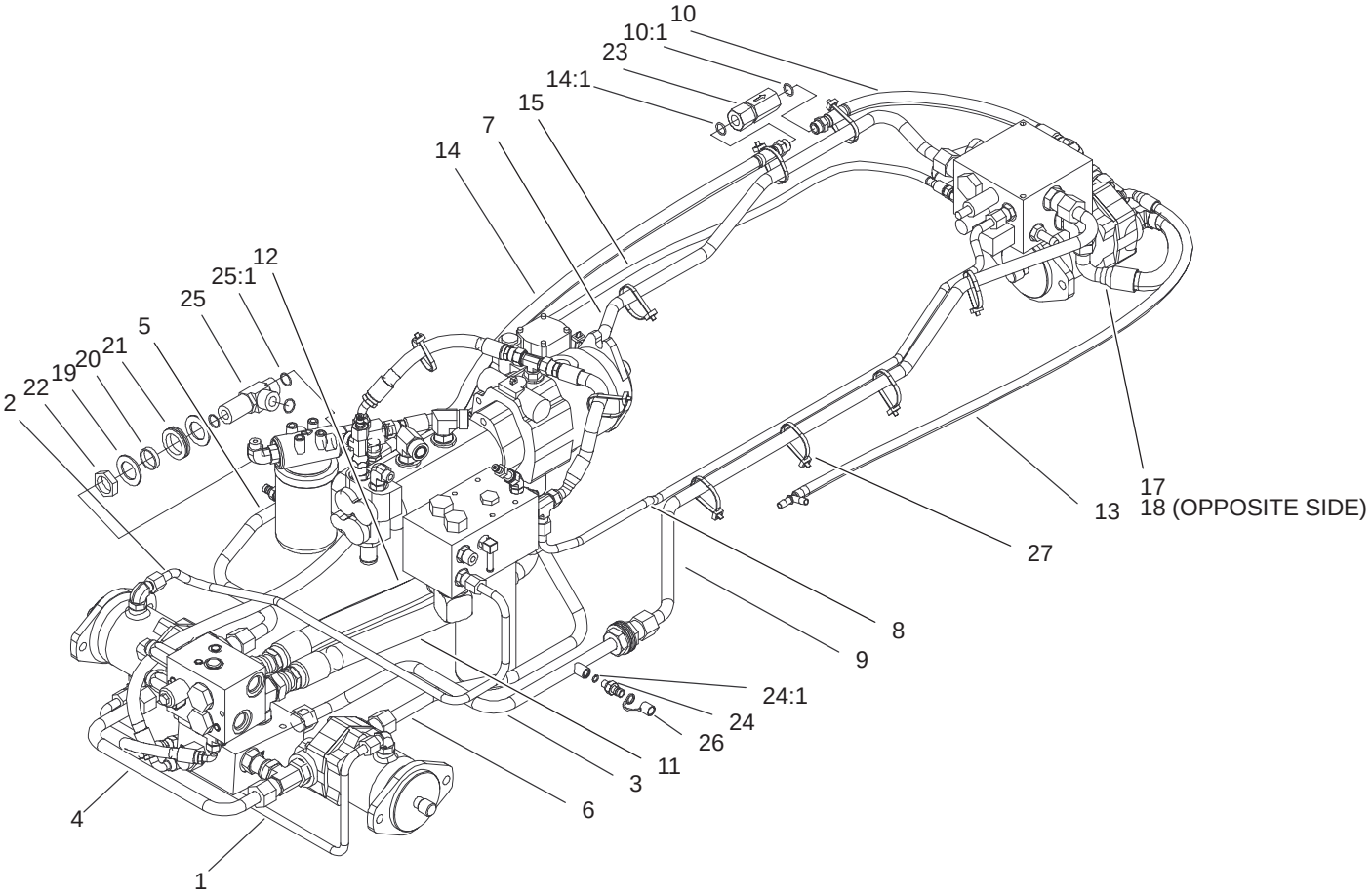

Sheet No.:22

Traction Hydraulic Plumbing Assembly

Ref. No.	Part No.	Qty.	Description
1	100–3095	1	Tube–HYD, Drain & Motors
2	104–0793	1	Tube–HYD, Drain Motor & Filter
3	105–3236	1	Tube–HYD
4	100–5574	1	Tube–HYD, Motor Front
5	104–3581	1	Tube–HYD, Motor RH
6	104–3582	1	Tube–HYD, Motor LH
7	100–5571	1	Tube–HYD, RH Rear Traction
8	105–4508	1	Tube–HYD, Charge LH
9	100–5572	1	Tube–HYD, LH Rear Traction
10	100–5617	1	Hose ASM
10:1	237–79	1	O–Ring
11	100–5524	1	Hose ASM
12	100–5525	1	Hose ASM
13	100–5614	1	Hose ASM
14	104–2237	1	Hose ASM
14:1	237–79	1	O–Ring
15	100–5643	1	Hose ASM
17	100–5579	1	Hose ASM
18	104–3502	1	Hose ASM
19	69–8910	4	Washer

Ref. No.	Part No.	Qty.	Description
20	69–8900	2	Spacer
21	240–7	2	Grommet–Rubber
22	340–126	2	Nut–Bulkhead
23	100–5600	1	Valve–Check
24	354–77	2	Fitting–Quick
24:1	237–78	1	O–Ring
25	104–3558	1	Fitting–Bulkhead
25:1	237–58	3	O–Ring
26	354–79	2	Cap–Dust, Yellow
27	3290–378	10	Tie–Cable

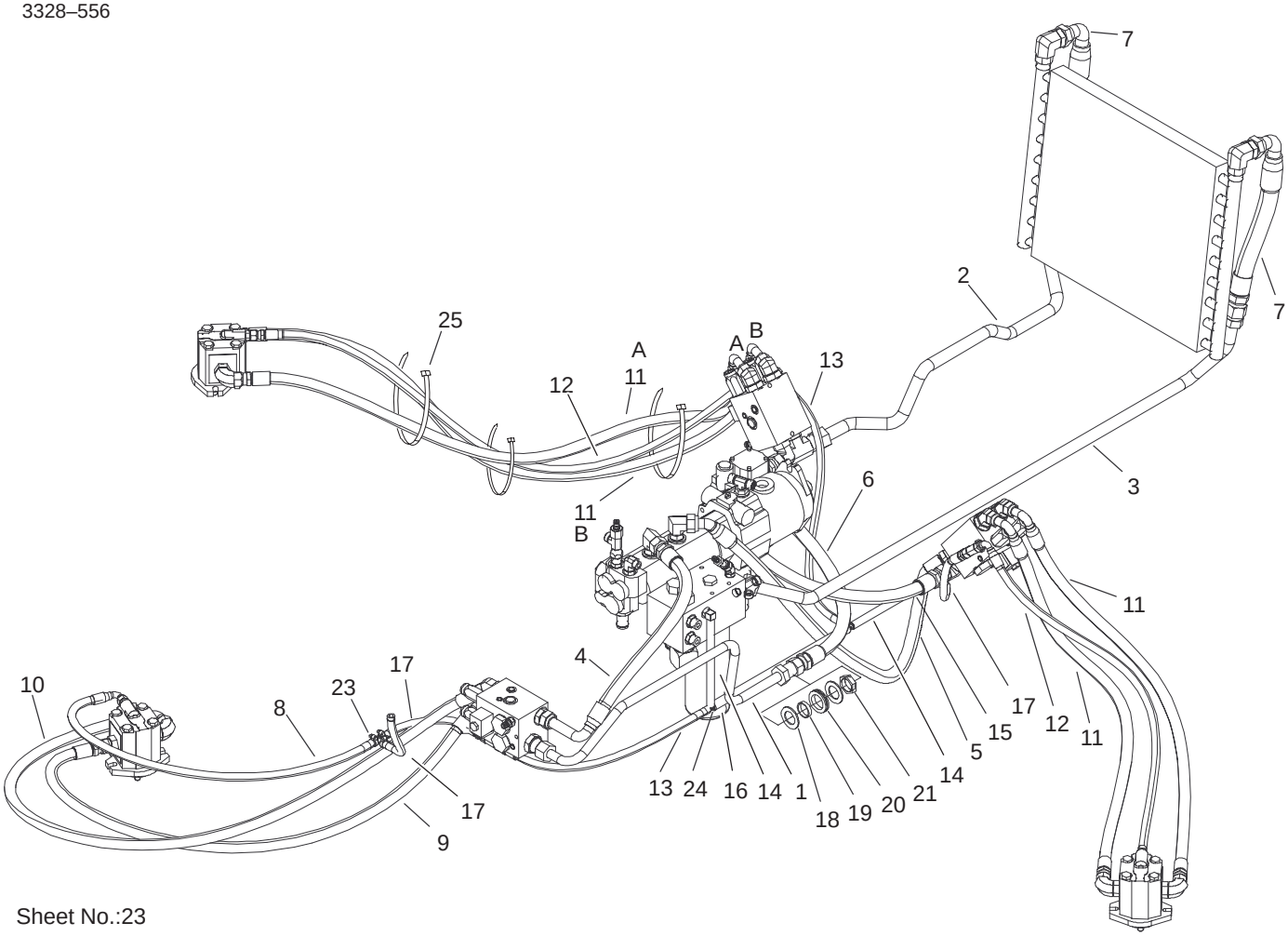

Sheet No.:23

PTO Hydraulic Plumbing Assembly

Ref. No.	Part No.	Qty.	Description
1	104–0795	1	Tube–HYD, Front PTO
2	104–0796	1	Tube–HYD, RH Cooler
3	104–0797	1	Tube–HYD, LH Cooler
4	95–0961	1	Hose ASM
5	104–2264	1	Hose ASM
6	104–2235	1	Hose ASM
7	100–5568	2	Hose ASM
8	104–2262	1	Hose ASM
9	104–2261	1	Hose ASM
10	104–2260	1	Hose ASM
11	104–2263	4	Hose ASM
12	104–2265	2	Hose ASM
13	100–5570	2	Hose ASM
14	100–5649	2	Hose
15	100–5645	1	Hose ASM
16	100–5607	1	Hose
17	100–5641	3	Hose ASM
18	69–8910	2	Washer
19	69–8900	1	Spacer
20	240–7	1	Grommet–Rubber
21	340–126	1	Nut–Bulkhead
23	2412–36	13	Clamp–Hose
24	354–107	4	Fitting–HYD, Tee
25	3290–379	9	Tie–Cable

Ref. No.	Part No.	Qty.	Description

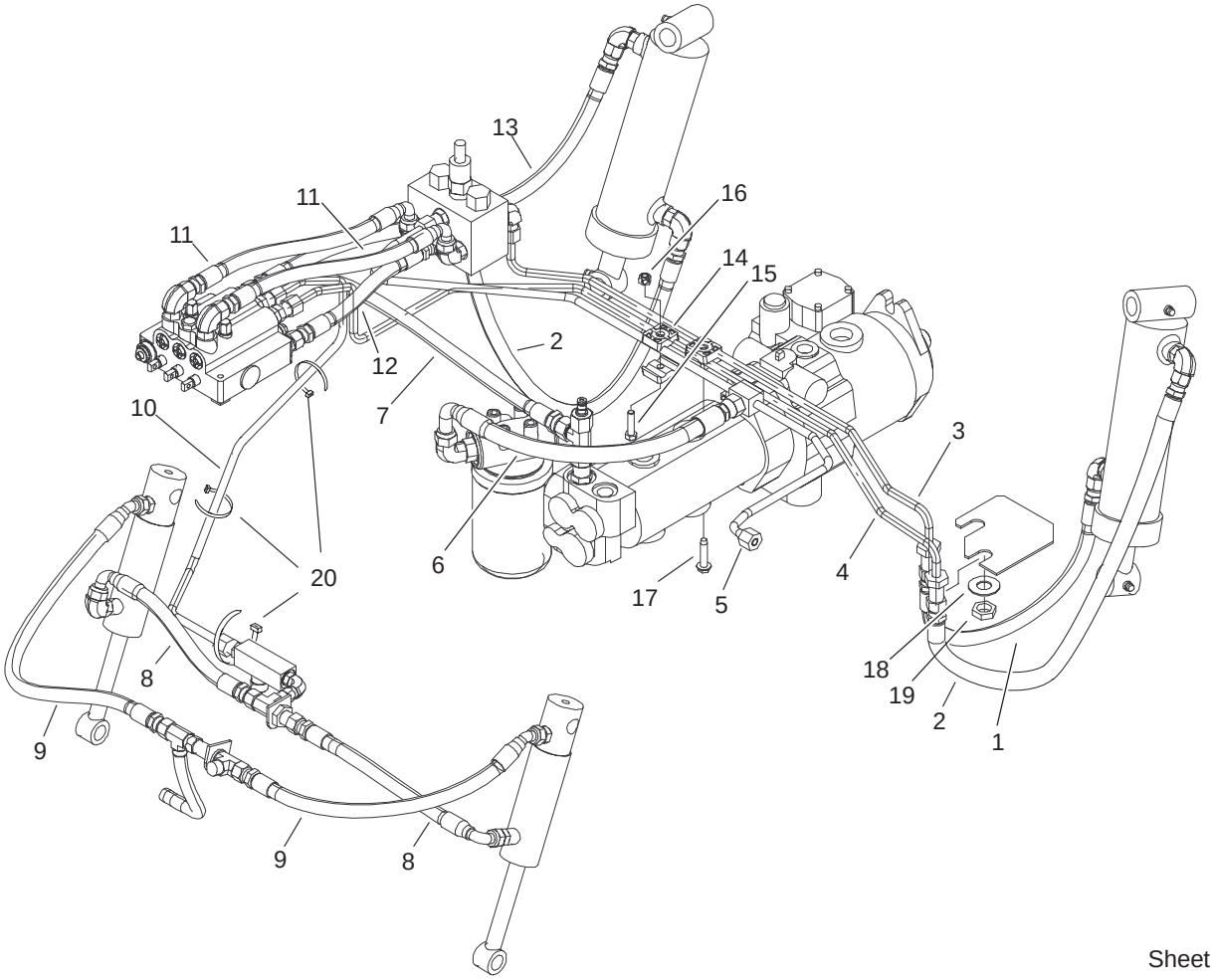

Sheet No.:24

Lift Arm Hydraulic Plumbing Assembly

Ref. No.	Part No.	Qty.	Description
1	100–5629	1	Hose ASM
2	100–5630	2	Hose ASM
3	100–3087	1	Tube–HYD, Left Return
4	100–3088	1	Tube–HYD, Lift
5	100–3089	1	Tube–HYD, Charge
6	83–9600	1	Hose ASM
7	104–2239	1	Hose ASM
*7:1	237–79	1	O–Ring
8	104–2234	2	Hose ASM
9	92–7595	2	Hose ASM
10	100–3084	1	Front Lift Tube ASM
11	104–2240	2	Hose ASM
12	100–5589	1	Hose ASM
13	100–5631	1	Hose ASM
14	56–7973	4	Clamp–Tube
15	322–6	1	Screw–HH
16	3296–29	1	Nut–Lock, NI
17	32144–57	1	Screw
18	69–8940	2	Washer
19	340–70	2	Nut–Lock
20	3290–378	5	Tie–Cable

Ref. No.	Part No.	Qty.	Description

* Not illustrated

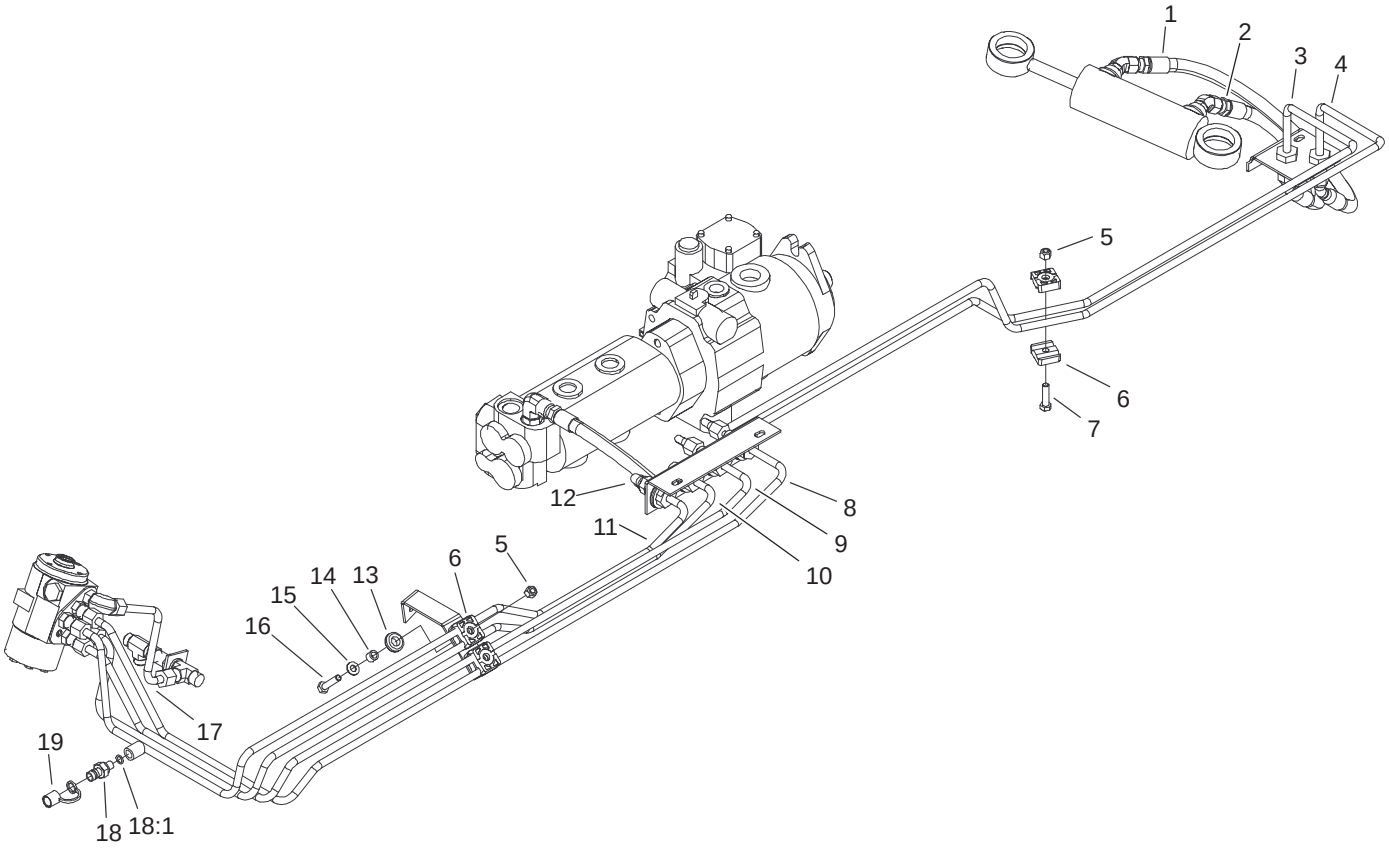

Sheet No.:25

Steering Hydraulic Plumbing Assembly

Ref. No.	Part No.	Qty.	Description
1	92–7538	1	Hose ASM
2	92–7539	1	Hose ASM
3	100–5576	1	Tube–HYD, RH Rear Steering
4	100–5575	1	Tube–HYD, LH Rear Steering
5	104–8300	3	Nut–Flange, NI
6	56–7973	6	Clamp–Tube
7	3234–36	1	Screw–HHF
8	100–3091	1	Tube–HYD, LH Front Steering
9	100–3092	1	Tube–HYD, RH Front Steering
10	100–3093	1	Tube–HYD, Beyond Power Steering
11	100–3090	1	Tube–HYD, Pressure Steering
12	69–5440	1	Hose ASM
13	93–5108	2	Grommet–Rubber
14	93–5109	2	Spacer
15	3256–71	2	Washer–Flat
16	322–8	2	Screw–HH
17	100–5588	1	Tube–HYD, Steer And Drain
18	354–77	1	Fitting–Quick
18:1	237–78	1	O–Ring

Ref. No.	Part No.	Qty.	Description
19	354–79	1	Cap–Dust, Yellow
20	3290–378	2	Tie–Cable

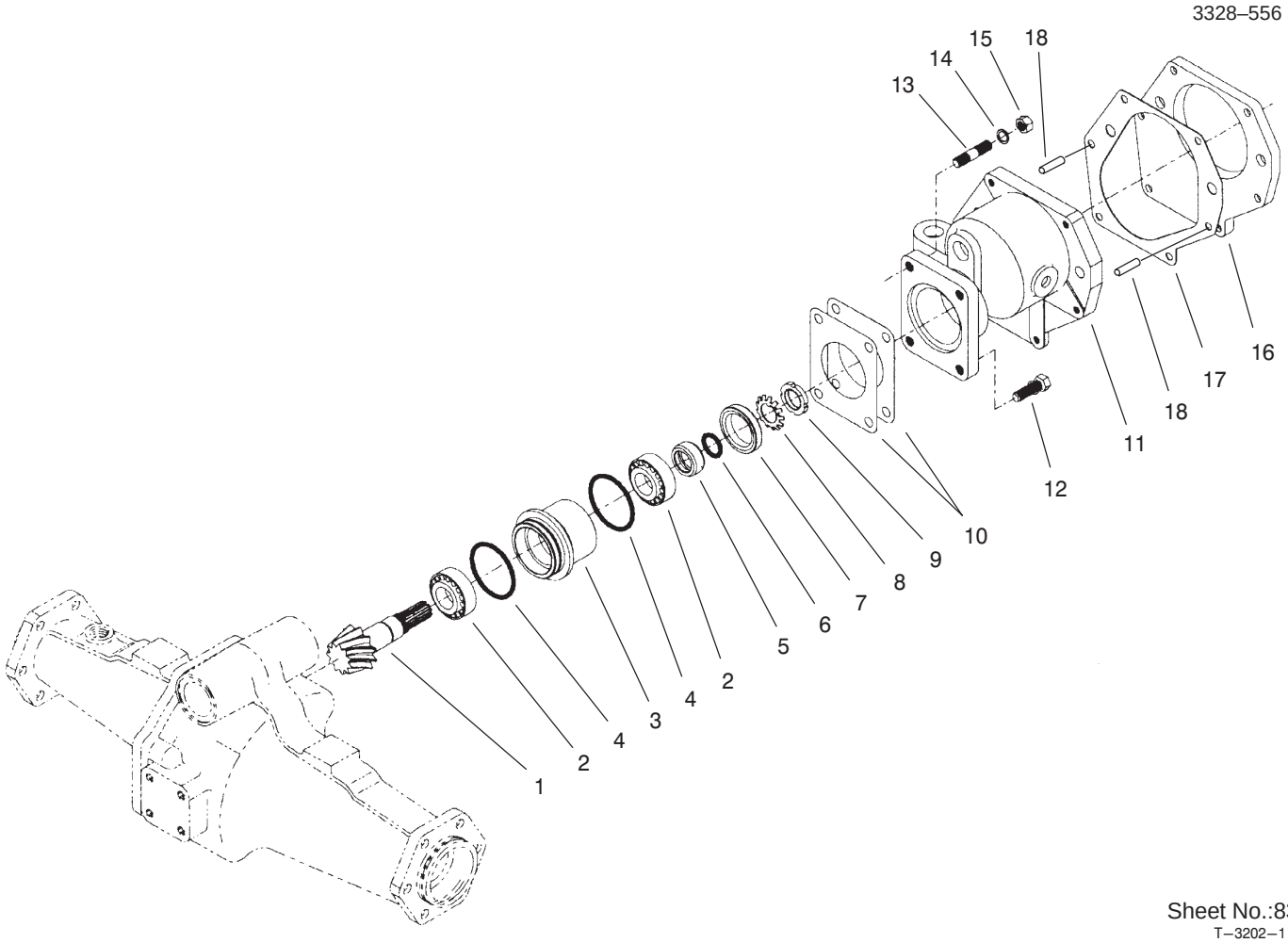

Sheet No.:83
T–3202–1

Rear Axle Assembly No. 100–3784
Bevel Pinion Shaft Assembly

Ref. No.	Part No.	Qty.	Description
1	100–2555	1	Ring And Pinion Matched Set
2	99–7570	2	Bearing–Taper Roller
3	95–7534	1	Case–Bearing
4	99–7571	2	O–Ring
5	99–7572	1	Collar–Oil Seal
6	99–7573	1	O–Ring
7	99–7574	1	Seal–Oil
8	99–7559	1	Washer–Lock
9	99–7560	1	Nut–Lock
10	99–7550	2	Shim 0.1
10	99–7551	2	Shim 0.2
11	95–7533	1	Case–Gear
12	99–7575	2	Bolt
13	100–2556	2	Stud
14	99–7527	2	Washer–Spring
15	99–7526	2	Nut
16	95–7541	1	Plate–Cover
17	95–7540	1	Gasket
18	104–2353	2	Pin–Dowel

Ref. No.	Part No.	Qty.	Description

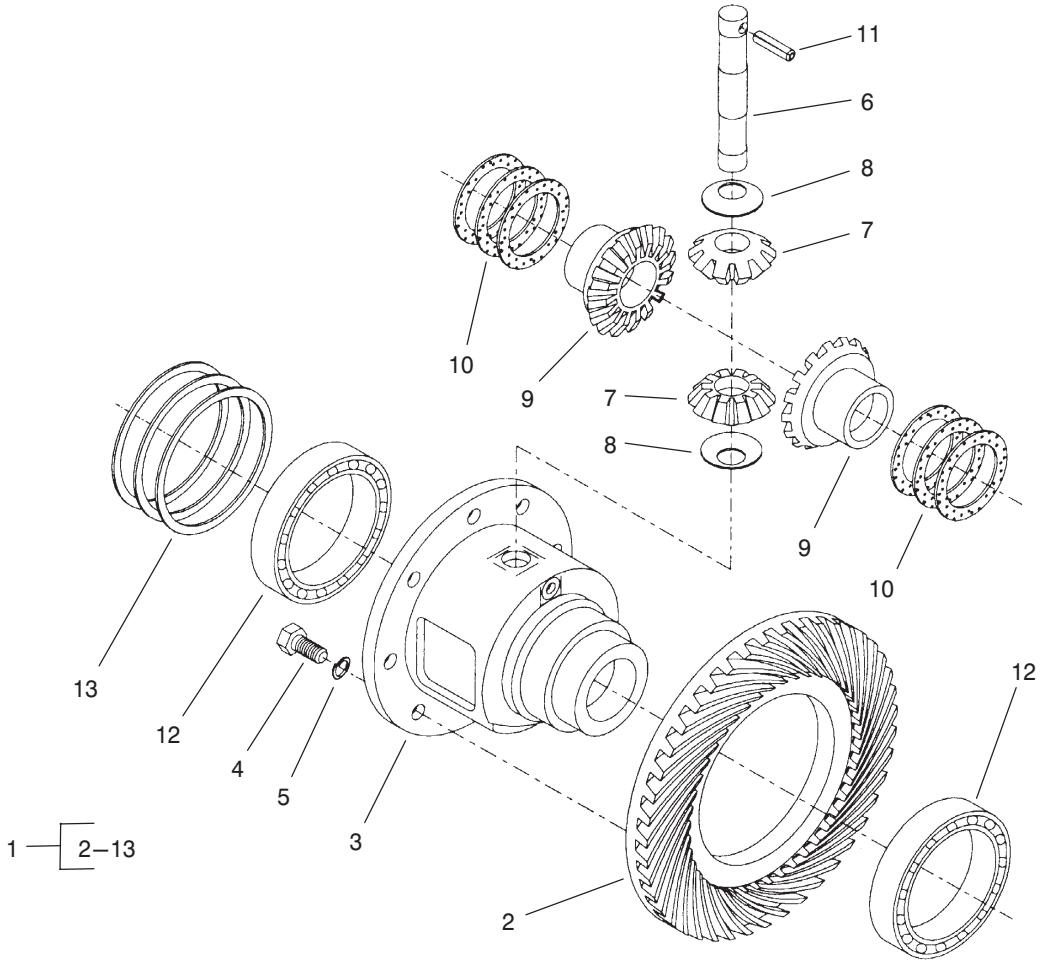

Sheet No.:84

T–3203–1

Rear Axle Assembly No. 100–3784 (Continued)
Differential Assembly

Ref. No.	Part No.	Qty.	Description
1	95–7503	1	Differential ASM
2	100–2555	1	Ring And Pinion Matched Set
3	95–7502	1	Case–Differential
4	99–7576	8	Bolt
5	99–7577	8	Washer–Spring
6	99–7578	1	Shaft–Differential
7	99–7579	2	Pinion–Differential
8	99–7580	2	Washer–Differential
9	99–7581	2	Gear–Differential
10	99–7582	2	Washer–Differential
10	99–7583	2	Washer–Differential
10	99–7584	2	Washer–Differential
11	99–7588	1	Pin–Spring
12	99–7562	2	Bearing–Ball
13	99–7585	2	Shim 0.1
13	99–7586	2	Shim 0.2
13	99–7587	2	Shim 0.4

Ref. No.	Part No.	Qty.	Description

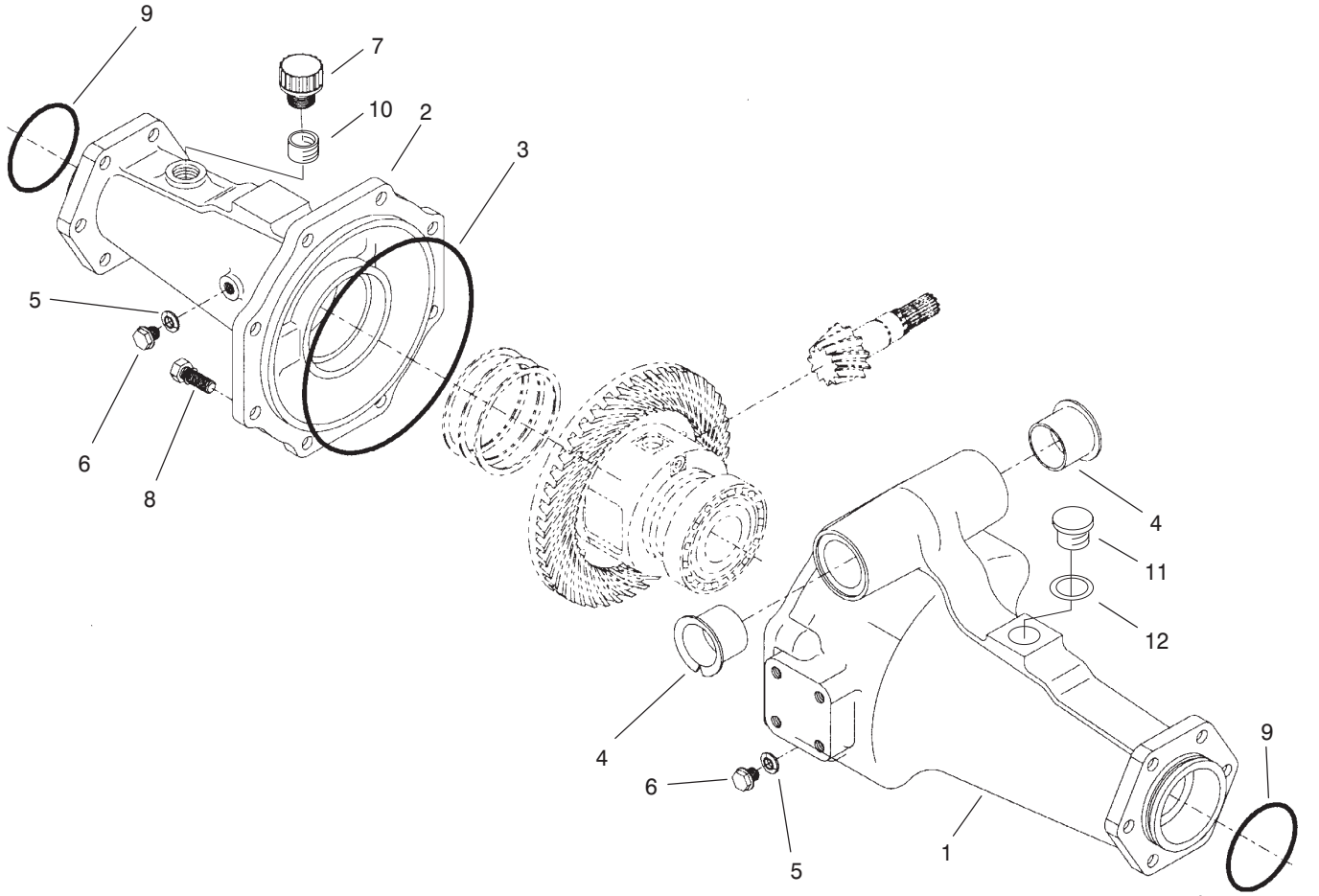

Sheet No.:85

T–3204–1

Rear Axle Assembly No. 100–3784 (Continued)
Axle Support Assembly

Ref. No.	Part No.	Qty.	Description
1	95–7508	1	Support–Axle
2	95–7506	1	Support–Axle
3	95–7507	1	O–Ring
4	95–7537	2	Bushing–Flanged
5	99–7590	2	Washer–Seal
6	99–7589	2	Plug
7	99–7591	1	Oil Plug ASM
8	99–7592	8	Bolt
9	99–7593	2	O–Ring
10	104–2377	1	Extension, Vent
11	104–8643	1	Plug
12	104–8644	1	O–Ring

Ref. No.	Part No.	Qty.	Description

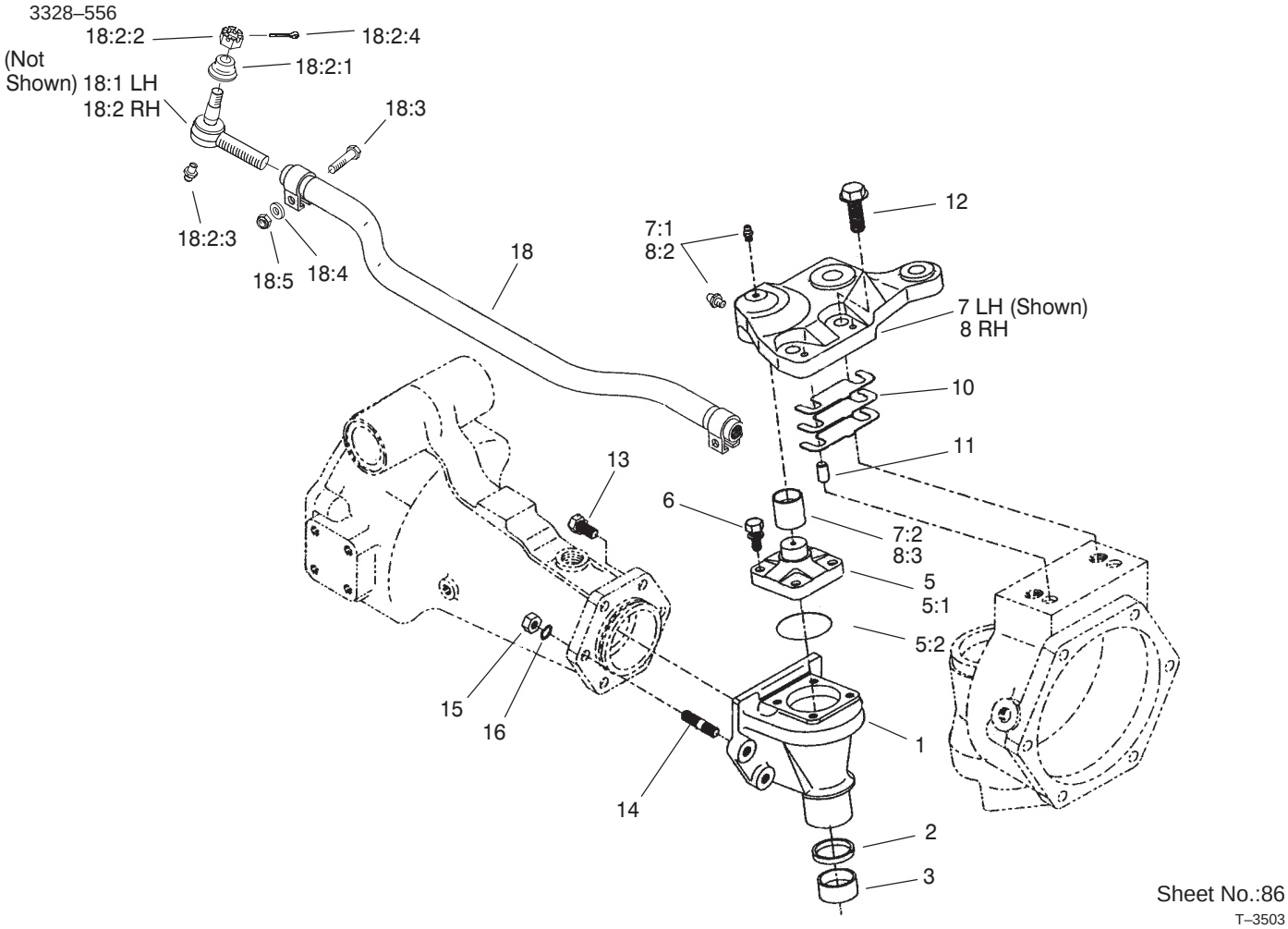

Rear Axle Assembly No. 100–3784 (Continued)
Bevel Gear Case Assembly

Ref. No.	Part No.	Qty.	Description
1	95–7538	2	Case–Bevel Gear
2	100–2557	2	Seal–Oil
3	104–2378	2	Bushing
5	104–2376	2	Knuckle ASM
5:1	104–2373	1	Knuckle
5:2	104–2372	1	O–Ring
6	104–2374	8	Bolt
7	100–3768	1	LH Steering Arm ASM
7:1	302–5	2	Fitting–Grease
7:2	104–8634	1	Bushing
8	100–3766	1	RH Steering Arm ASM
8:2	302–5	2	Fitting–Grease
8:3	104–8634	1	Bushing
10	95–7547	2	Shim 0.1
10	95–7548	2	Shim 0.2
10	95–7549	2	Shim 0.4
11	99–7597	4	Pin–Dowel
12	104–2375	4	Bolt
13	99–7599	8	Bolt
14	99–7525	4	Stud
15	99–7526	4	Nut
16	99–7527	4	Washer–Spring
18	100–3762	1	Tie Rod ASM
*18:1	100–3851	1	LH Tie Rod End ASM

Ref. No.	Part No.	Qty.	Description
*18:1:1	100–3853	1	Cover–Dust
*18:1:2	100–3854	1	Nut–Castle
*18:1:3	302–5	1	Fitting–Grease
*18:1:4	3272–11	1	Pin–Cotter
18:2	100–3852	1	RH Tie Rod End ASM
18:2:1	100–3853	1	Cover–Dust
18:2:2	100–3854	1	Nut–Castle
18:2:3	302–5	1	Fitting–Grease
18:2:4	3272–11	1	Pin–Cotter
18:3	100–3855	2	Bolt
18:4	99–7527	2	Washer–Spring
18:5	99–7526	2	Nut

* Not illustrated

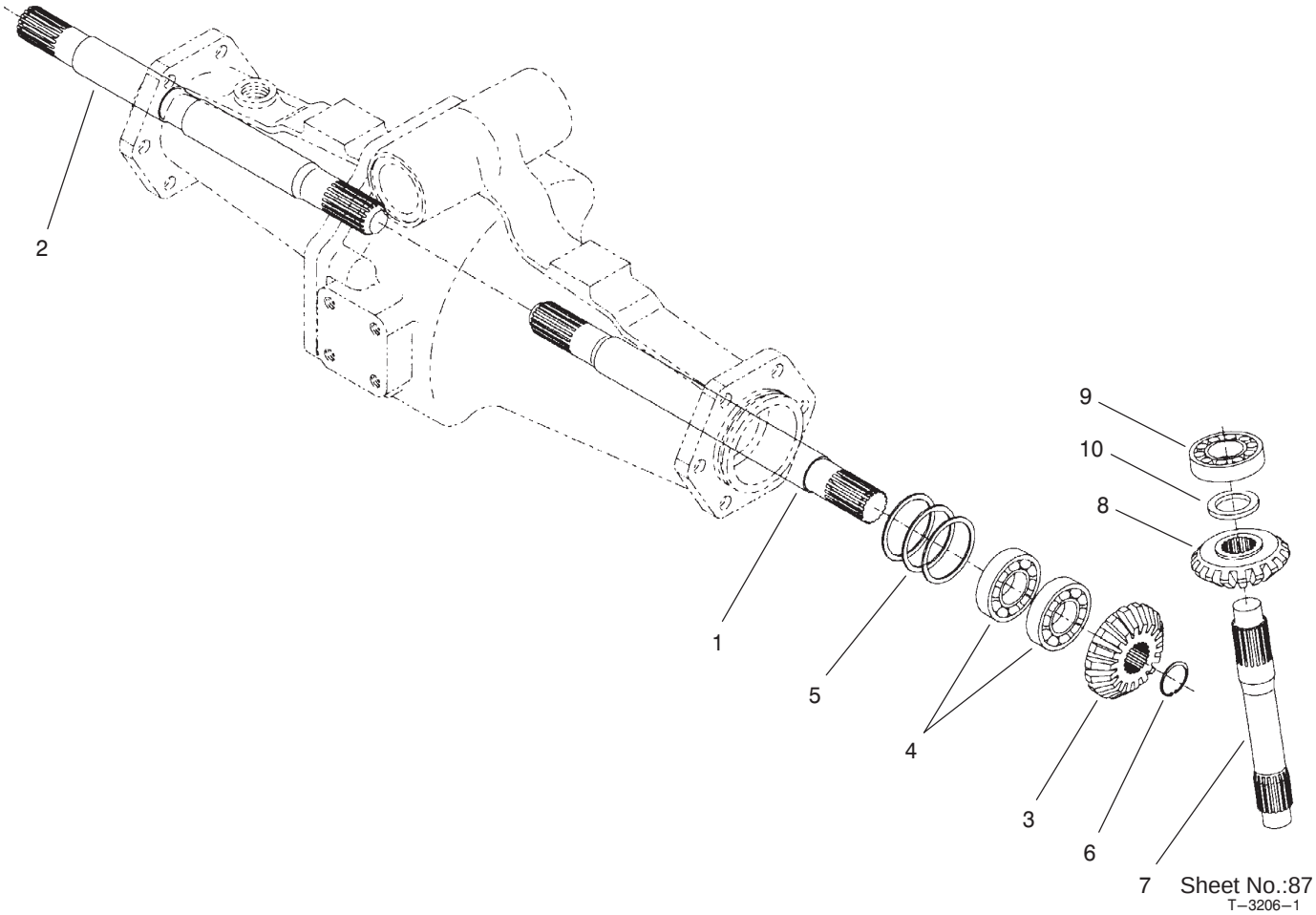

Rear Axle Assembly No. 100–3784 (Continued)
Bevel Gear Shaft Assembly

Ref. No.	Part No.	Qty.	Description
1	95–7509	1	Shaft–Gear, Differential
2	95–7512	1	Shaft–Gear, Differential
3	95–7517	2	Gear–15 Tooth Bevel
4	99–7530	4	Bearing–Ball
5	99–7552	2	Shim 0.1
5	99–7553	2	Shim 0.2
5	99–7554	2	Shim 0.5
6	99–7531	2	Clip
7	95–7529	2	Shaft–Bevel Gear
8	95–7519	2	Gear–17 Tooth Bevel
9	99–7532	2	Bearing–Taper Roller
10	99–7558	2	Collar

Ref. No.	Part No.	Qty.	Description

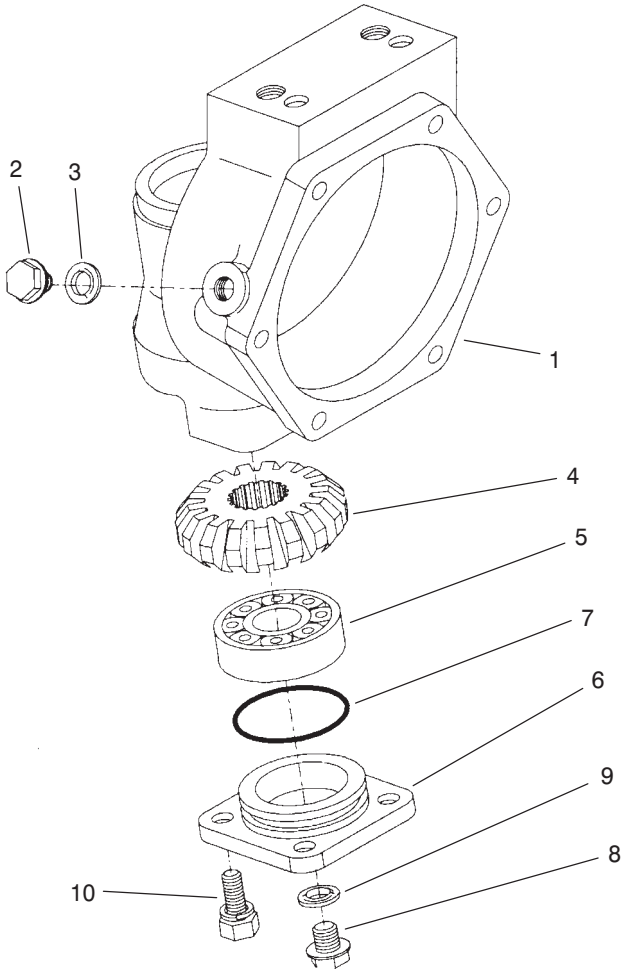

Sheet No.:88
T–3207–1

Rear Axle Assembly No. 100–3784 (Continued)
Axle Case Assembly

Ref. No.	Part No.	Qty.	Description
1	95–7531	2	Case–Axle
2	99–7535	2	Plug
3	99–7536	2	Washer–Seal
4	95–7527	2	Gear–17 Tooth Bevel
5	99–7532	2	Bearing–Taper Roller
6	100–2560	2	Cover
7	100–2561	2	O–Ring
8	99–7589	2	Plug
9	99–7590	2	Washer–Seal
10	100–2562	8	Bolt

Ref. No.	Part No.	Qty.	Description

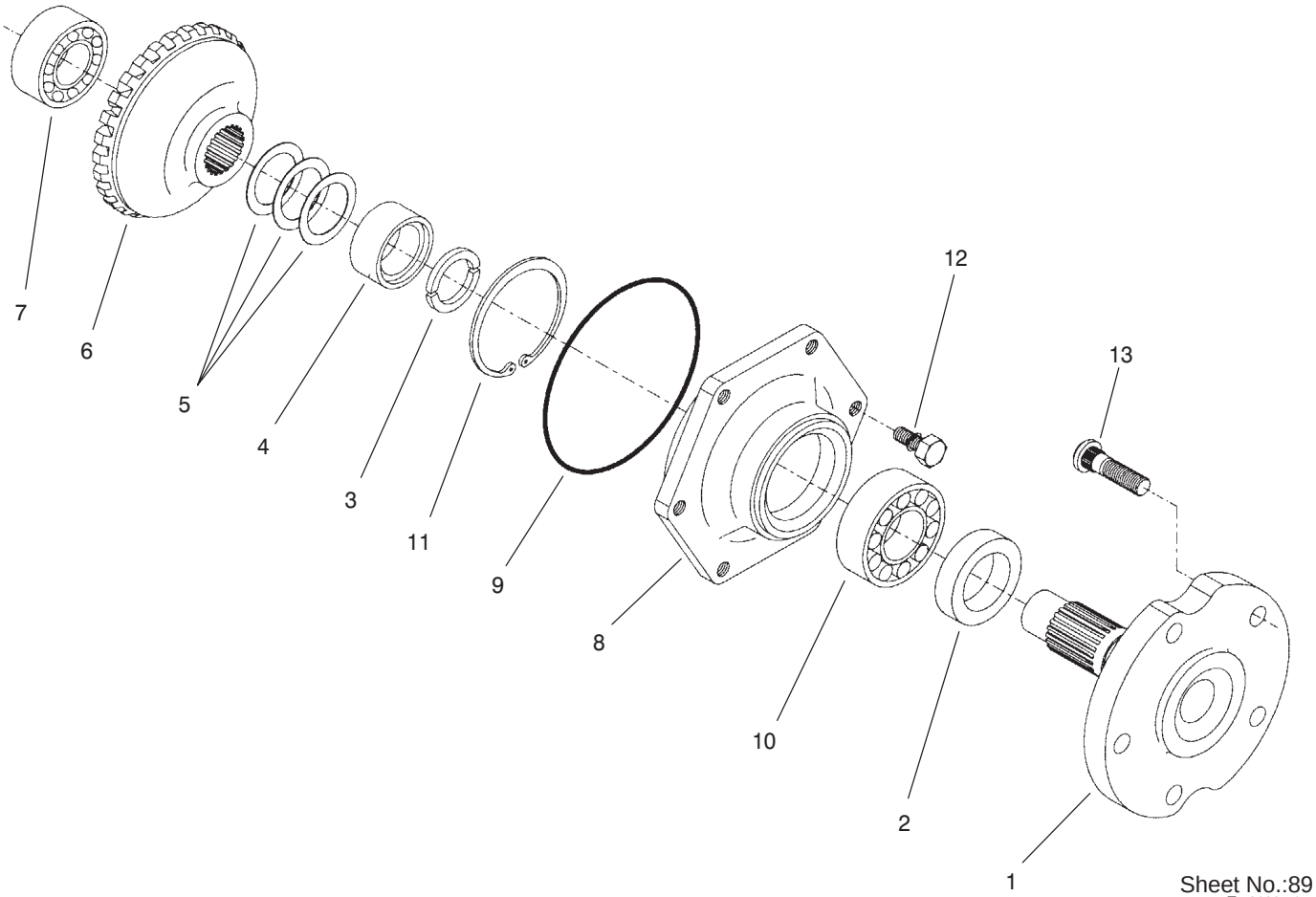

Sheet No.:89
T–3108–1

Rear Axle Assembly No. 100–3784 (Continued)
Axle Assembly

Ref. No.	Part No.	Qty.	Description
1	95–7522	2	Axle
2	99–7564	2	Seal–Oil
3	95–7544	4	Clip
4	95–7523	2	Spacer
5	99–7555	2	Shim 0.3
5	99–7556	2	Shim 0.2
5	99–7557	2	Shim 0.5
6	95–7524	2	Gear–29 Tooth Bevel
7	99–7534	2	Bearing–Ball
8	95–7521	2	Cover–Axle
9	99–7538	2	O–Ring
10	99–7561	2	Bearing–Ball
11	99–7539	2	Clip
12	99–7596	12	Bolt
13	99–7563	10	Stud

Ref. No.	Part No.	Qty.	Description

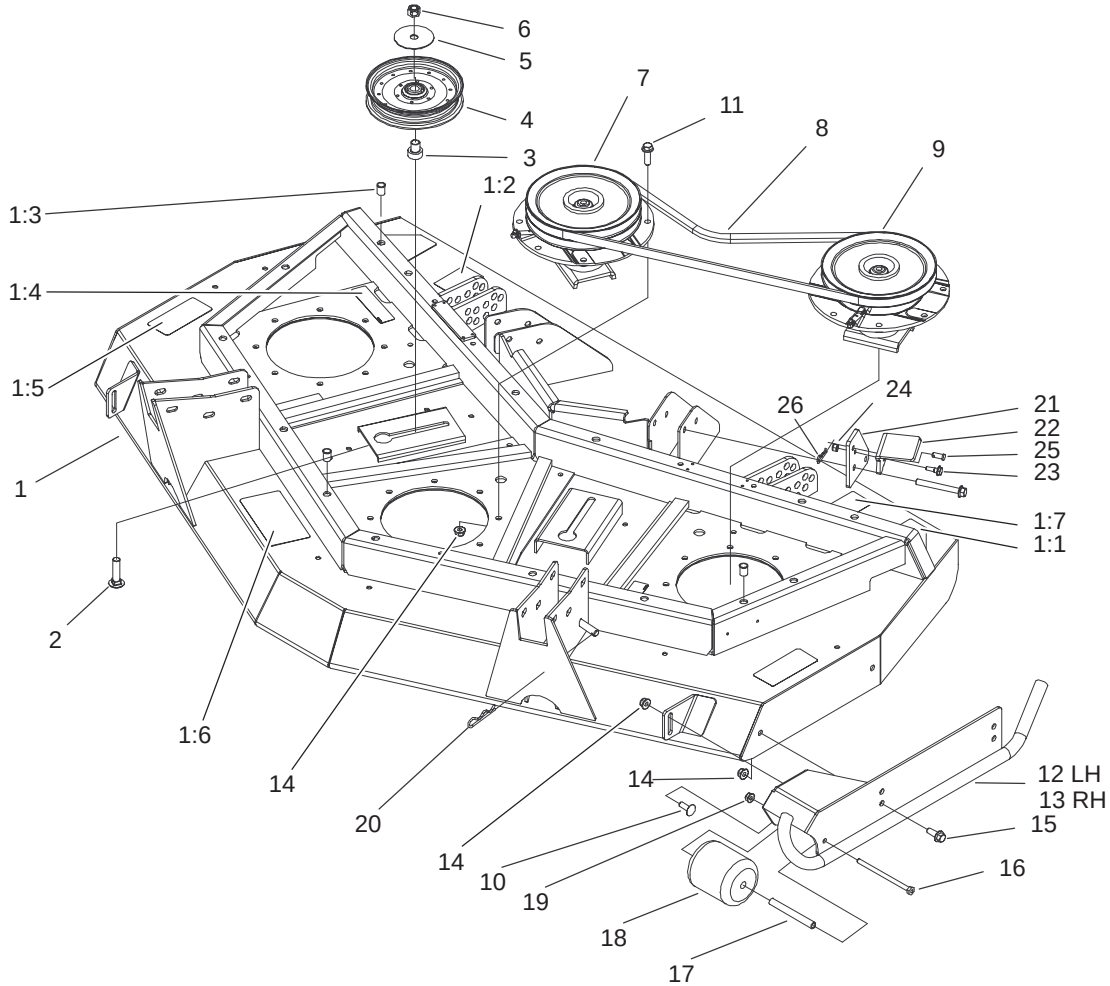

Sheet No.:2

Front Deck, Idler and Skid Assembly

Ref. No.	Part No.	Qty.	Description
1	100–3035	1	Front Deck ASM
1:1	43–8480	2	Decal–Danger
1:1	106–6753	2	Decal–Danger
1:2	100–5624	1	Decal–HOC, RH
1:3	32148–9	3	Insert–Nut
1:4	100–6578	4	Decal–Danger
1:5	93–7818	2	Decal–Torque, Blade Bolt
1:6	100–5622	1	Decal–HOC
1:7	104–3578	1	Decal–HOC, LH
1:8	105–0786	2	Pad–Plastic
1:9	3269–24	8	Rivet
2	3233–4	2	Screw–CARR
3	100–2984	2	Spacer–Idler
4	99–5493	2	Pulley–Idler
5	100–3102	2	Washer–Flat
6	3296–25	2	Nut–Lock, NI
7	104–3530	1	Double Driven Spindle ASM
8	55–7660	2	V–Belt
9	104–3531	1	High Driven Spindle ASM
10	3231–2	2	Screw–CARR
11	3234–24	20	Screw–HHF
12	100–5612–01	1	LH Skid ASM
13	100–5605–01	1	RH Skid ASM

Ref. No.	Part No.	Qty.	Description
14	104–8301	30	Nut–Flange, NI
15	3234–42	4	Screw–HHF
16	322–29	2	Screw–HH
17	105–4549	2	Spacer–Roller
18	93–4803	2	Roller–Deck
19	104–8300	2	Nut–Flange, NI
20	3290–355	1	Pin–Hair
21	106–2033–01	1	Plate–Latch
22	106–2032–01	1	Latch–Deck
23	11–9030	1	Screw–Shoulder
24	3296–42	1	Nut–Lock, NI
25	283–62	1	Pin–Clevis
26	3290–467	1	Pin–Hair

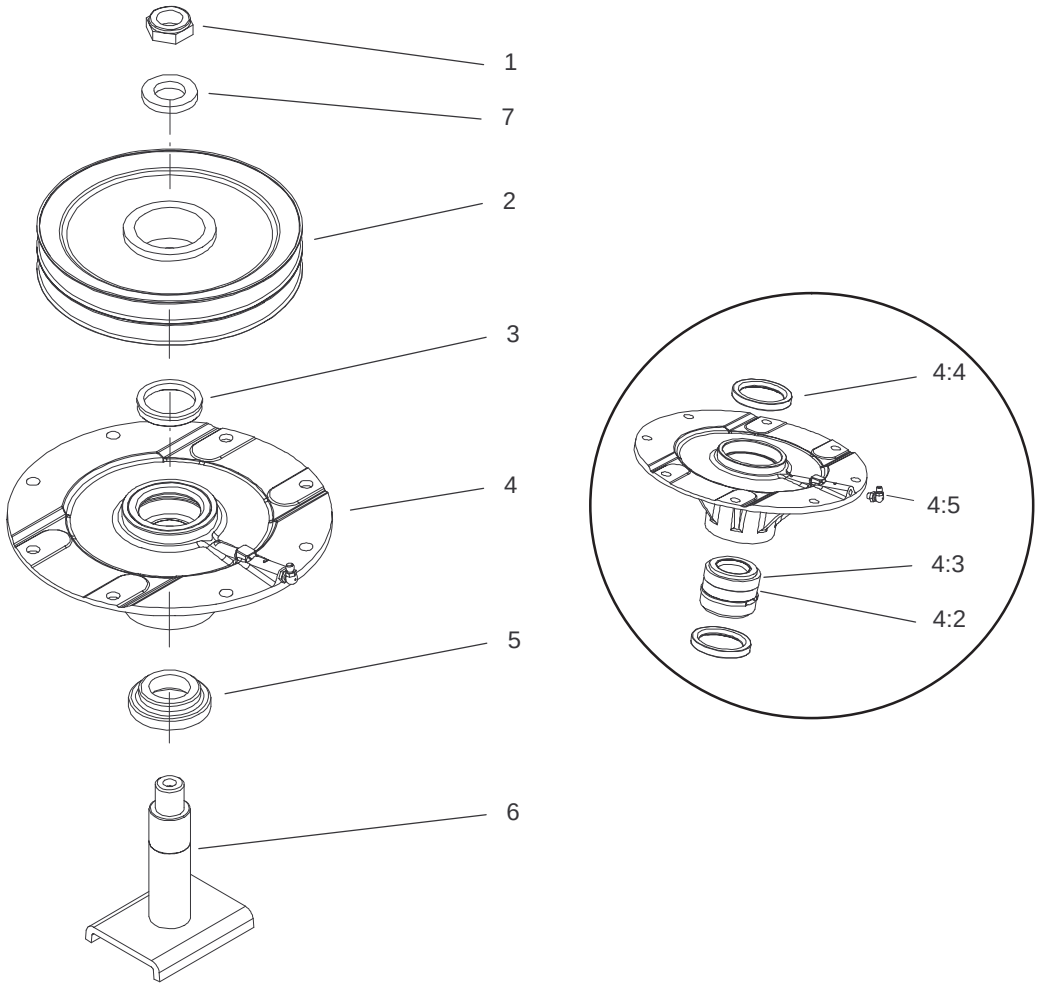

Sheet No.:A1

Spindle Assembly No. 104–3530 (Front Deck)

Ref. No.	Part No.	Qty.	Description
1	3296–60	1	Nut–Lock, NI
2	104–3547	1	Pulley–Driven, Double
3	104–3564	1	Seal–V Ring
4	104–3552	1	Spindle Housing ASM
4:2	104–3549	1	Spacer Set–Bearing
4:3	26–1830	1	Bearing ASM
4:4	253–154	2	Seal–Oil
4:5	302–60	1	Fitting–Grease
5	92–9800	1	Spacer–Shaft, Spindle
6	104–3554	1	Spindle Shaft ASM
7	104–8322	1	Washer–Hardened

Ref. No.	Part No.	Qty.	Description

3328–556

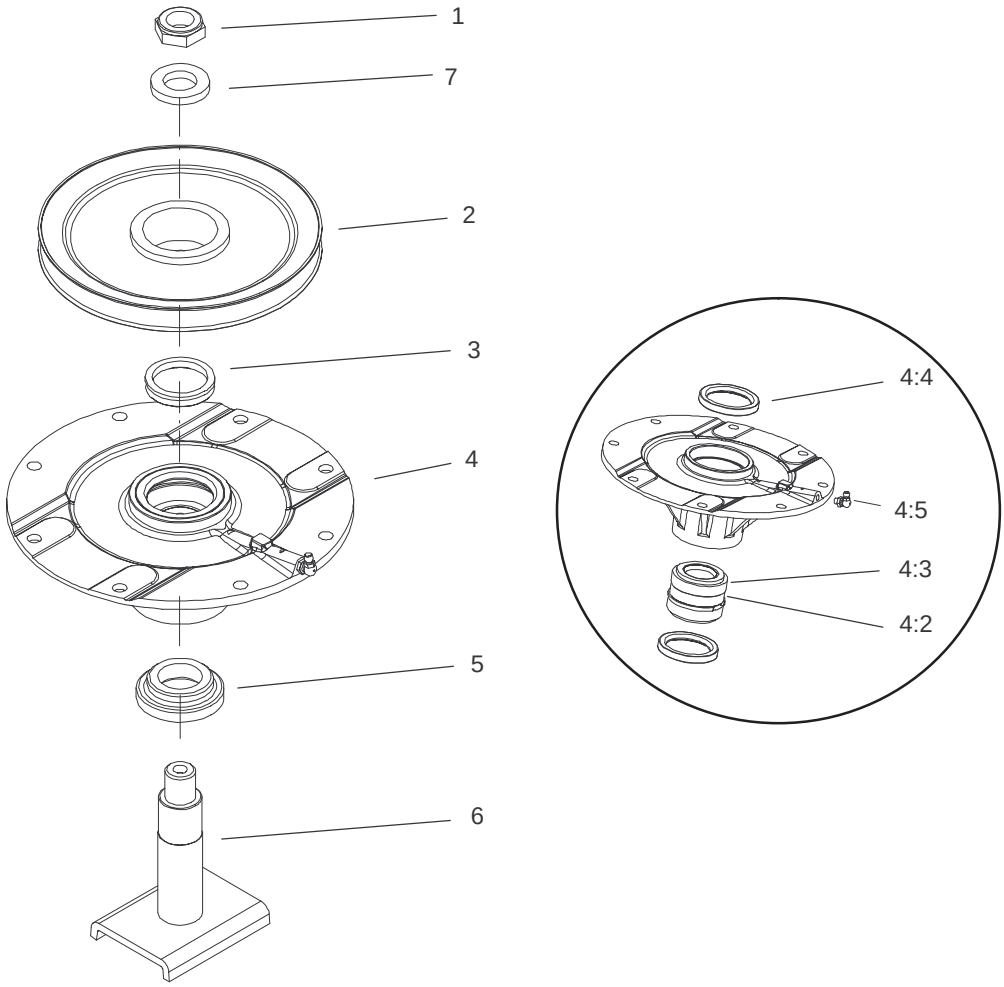

Sheet No.:A2

Spindle Assembly No. 104–3531 (Front Deck)

Ref. No.	Part No.	Qty.	Description
1	3296–60	1	Nut–Lock, NI
2	104–3548	1	Pulley–Driven, High
3	104–3564	1	Seal–V Ring
4	104–3552	1	Spindle Housing ASM
4:2	104–3549	1	Spacer Set–Bearing
4:3	26–1830	1	Bearing ASM
4:4	253–154	2	Seal–Oil
4:5	302–60	1	Fitting–Grease
5	92–9800	1	Spacer–Shaft, Spindle
6	104–3554	1	Spindle Shaft ASM
7	104–8322	1	Washer–Hardened

Ref. No.	Part No.	Qty.	Description

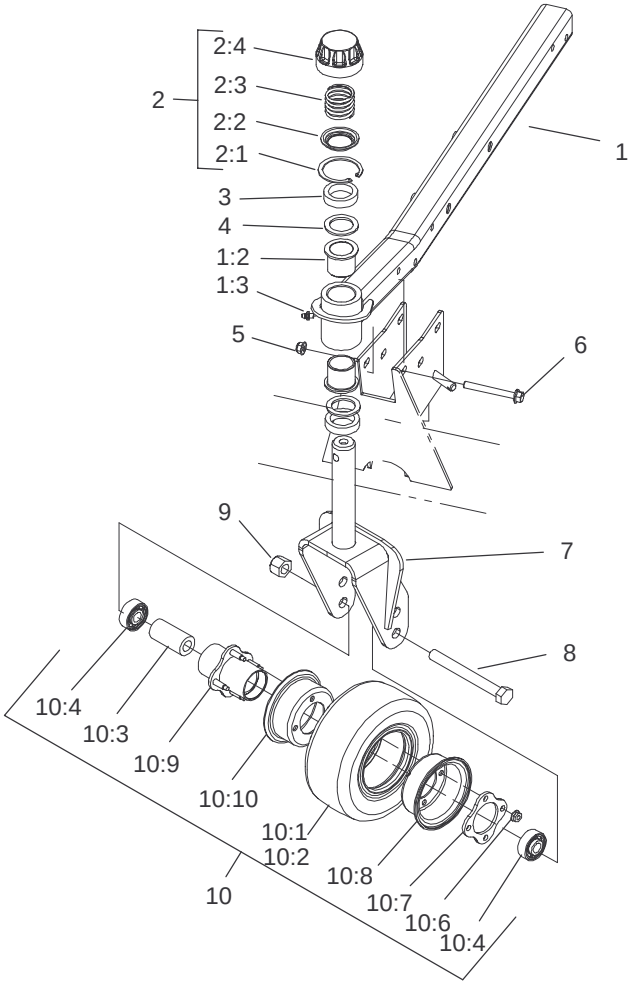

Sheet No.:3

Castor Arm and Tire Assembly (Front Deck)

Ref. No.	Part No.	Qty.	Description
1	100–8092	1	Front LH Castor Arm ASM
1	100–8091	1	Front RH Castor Arm ASM
1:2	104–8340	2	Bushing
1:3	302–5	1	Fitting–Grease
2	92–9727	2	HOC Cap ASM
2:1	92–5581	1	Ring–Retaining
2:2	92–5583	1	Washer–Cap
2:3	92–9726	1	Spring–Compression
2:4	92–8861	1	Cap–HOC
3	69–1510	10	Spacer–Castor
4	69–6860	4	Washer–Thrust
5	104–8301	10	Nut–Flange, NI
6	3234–41	10	Screw–HHF
7	104–0762–01	2	Castor Fork ASM
8	327–24	2	Screw–HH
9	3296–53	2	Nut–Lock, NI
10	93–9938	2	8 Inch Wheel ASM
10	93–5974	2	8 Inch Foam Filled Wheel ASM
10:1	93–9939	1	Tire
10:2	68–8950	1	Tube–Inner (W/Valve)
10:3	93–4241	1	Spacer–Bearing, Inner
10:4	93–4237	2	Bearing
10:6	32128–16	4	Nut–HHF

Ref. No.	Part No.	Qty.	Description
10:7	93–4242	1	Plate
10:8	93–4239	1	Rim–Wheel, Half
10:9	93–5980	1	Hub
10:10	95–2741	1	Rim–Wheel, Half

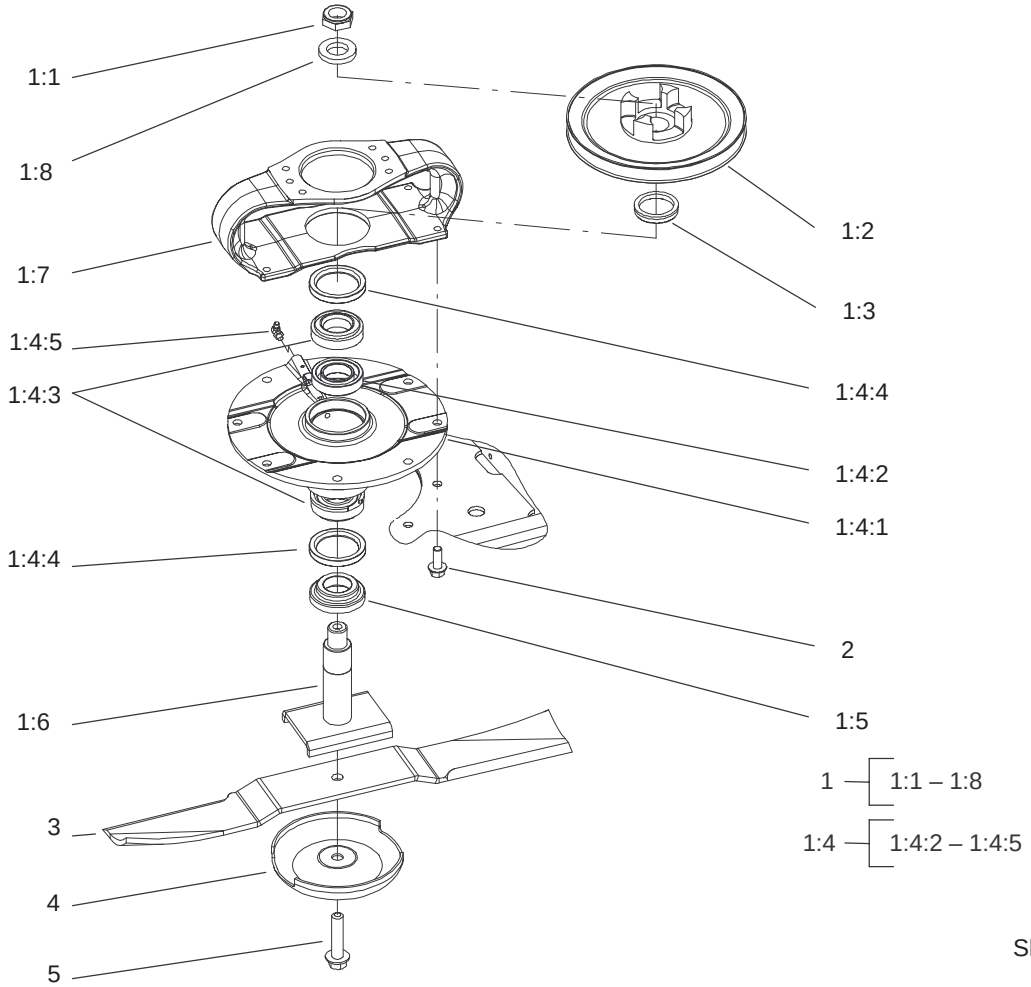

Sheet No.:4

Spindle Assembly (Front Deck)

Ref. No.	Part No.	Qty.	Description
1	104–3529	1	Driving Spindle ASM
1:1	3296–60	1	Nut–Lock, NI
1:2	104–3545	1	Pulley–Driving
1:3	104–3564	1	Seal–V Ring
1:4	104–3552	1	Spindle Housing ASM
1:4:2	104–3549	1	Spacer Set–Bearing
1:4:3	26–1830	1	Bearing ASM
1:4:4	253–154	2	Seal–Oil
1:4:5	302–60	1	Fitting–Grease
1:5	92–9800	1	Spacer–Shaft, Spindle
1:6	104–3554	1	Spindle Shaft ASM
1:7	104–3544	1	Mount–Drive Motor
1:8	104–8322	1	Washer–Hardened
2	3234–42	4	Screw–HHF
3	92–5608–03	3	Blade
4	72–9361	3	Cup–Scalp, Anti
5	92–5816	3	Bolt–Blade

Ref. No.	Part No.	Qty.	Description

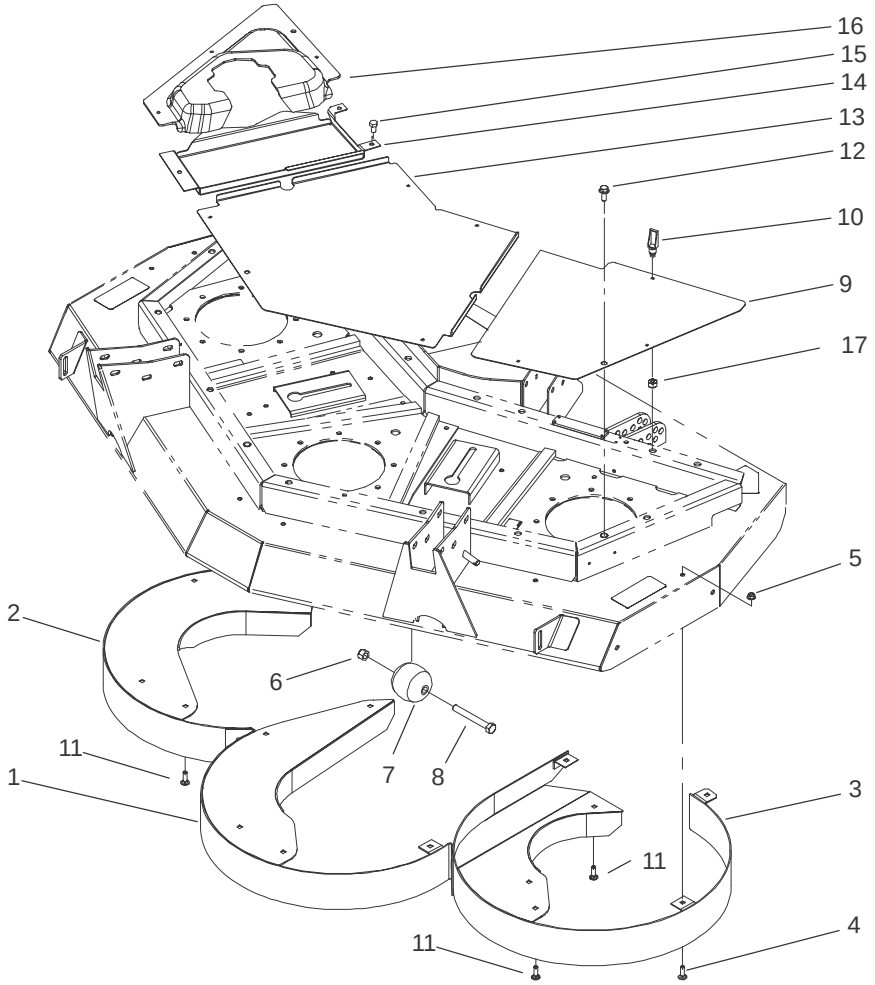

Sheet No.:5

Rear Discharge Chamber and Cover Assembly (Front Deck)

Ref. No.	Part No.	Qty.	Description
1	104–2200–01	1	Center Chamber ASM
2	104–2201–01	1	RH Chamber ASM
3	104–2202–01	1	LH Chamber ASM
4	3230–18	15	Screw–CARR
5	104–8300	18	Nut–Flange, NI
6	3296–25	2	Nut–Lock, NI
7	29–4820	2	Roller
8	325–17	2	Screw–HH
9	100–5663–03	1	Cover–Front, LH
10	74–5950	10	Latch–Swell
11	3230–22	3	Screw–CARR
12	3234–42	3	Screw–HHF
13	100–5660–03	1	Cover–Front, Center
14	100–5662–03	1	Cover–Front, RH
15	32144–69	3	Screw–HH
16	100–5661	1	Cover–Front, RH
17	1–804254	10	Nut

Ref. No.	Part No.	Qty.	Description

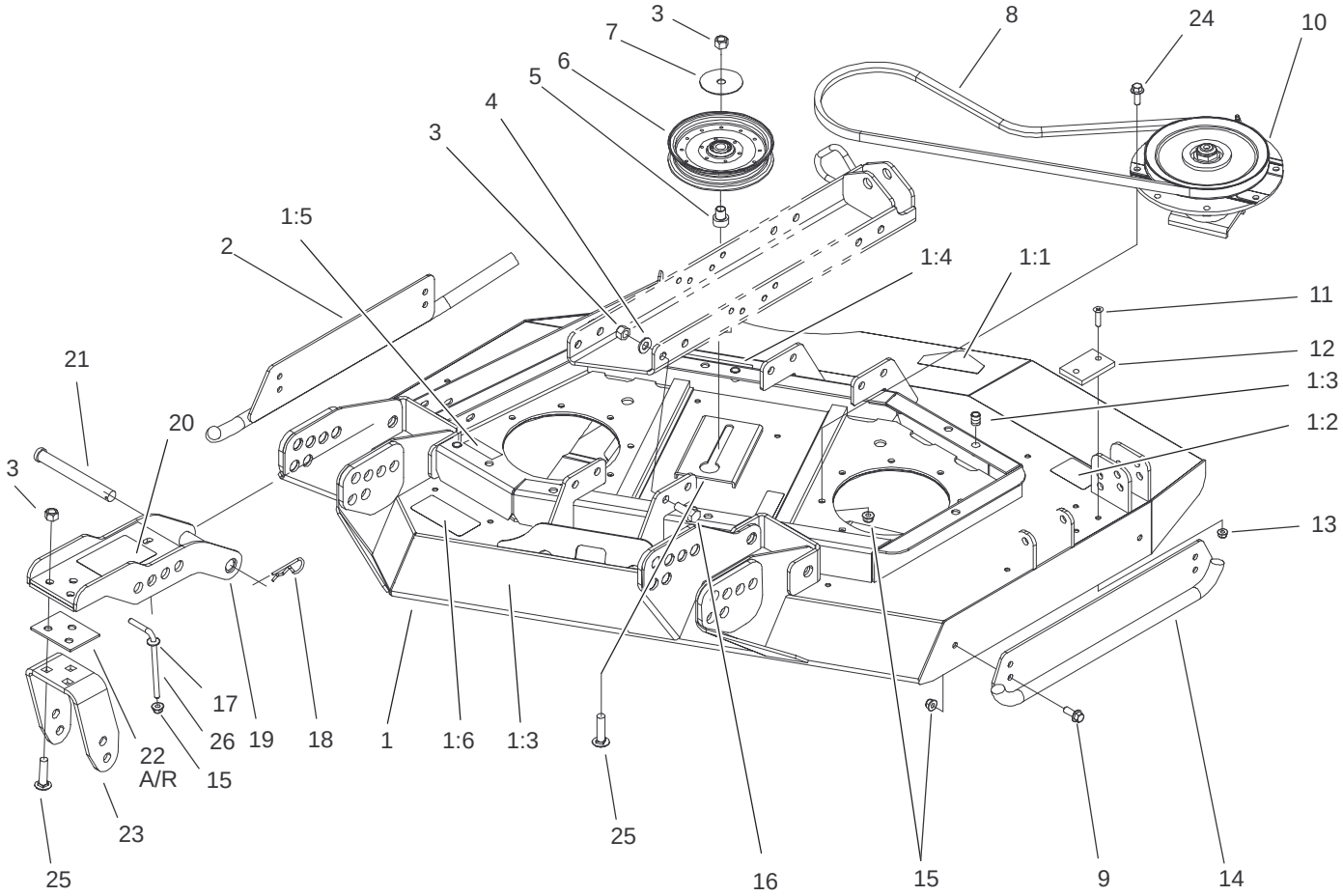

Sheet No.:2

RH Deck, Idler and Skid Assembly

Ref. No.	Part No.	Qty.	Description
1	100–3036	1	RH Side Deck ASM
1:1	43–8480	1	Decal–Danger
1:1	106–6753	1	Decal–Danger
1:2	100–5694	1	Decal–Rear HOC, RH
1:3	32148–9	3	Insert–Nut
1:4	100–5622	1	Decal–HOC
1:5	100–6578	3	Decal–Danger
1:6	93–7818	1	Decal–Torque, Blade Bolt
2	100–5620–01	1	Skid ASM–RH
3	3296–25	15	Nut–Lock, NI
4	3256–26	8	Washer–Flat
5	100–2984	1	Spacer–Idler
6	99–5493	1	Pulley–Idler
7	100–3102	1	Washer–Flat
8	55–7660	1	V–Belt
9	3234–42	4	Screw–HHF
10	104–3532	1	Low Driven Spindle ASM
11	32108–103	2	Screw–FH
12	69–9290	1	Pad–Bumper
13	104–8300	2	Nut–Flange, NI
14	104–2250–01	1	Skid ASM–Side
15	104–8301	22	Nut–Flange, NI
16	3234–38	8	Screw–HHF
17	3256–3	2	Washer–Flat

Ref. No.	Part No.	Qty.	Description
18	3290–343	4	Pin–Hair
19	104–7529–01	2	Castor Bracket ASM
20	100–5623	1	Decal–HOC, RH
21	100–5569	4	Pin–Clevis
22	104–7524	8	Shim
23	104–7525–01	2	Bracket–Fork
24	3234–24	12	Screw–HHF
25	3233–4	7	Screw–CARR
26	106–2047	2	Rod–Tension

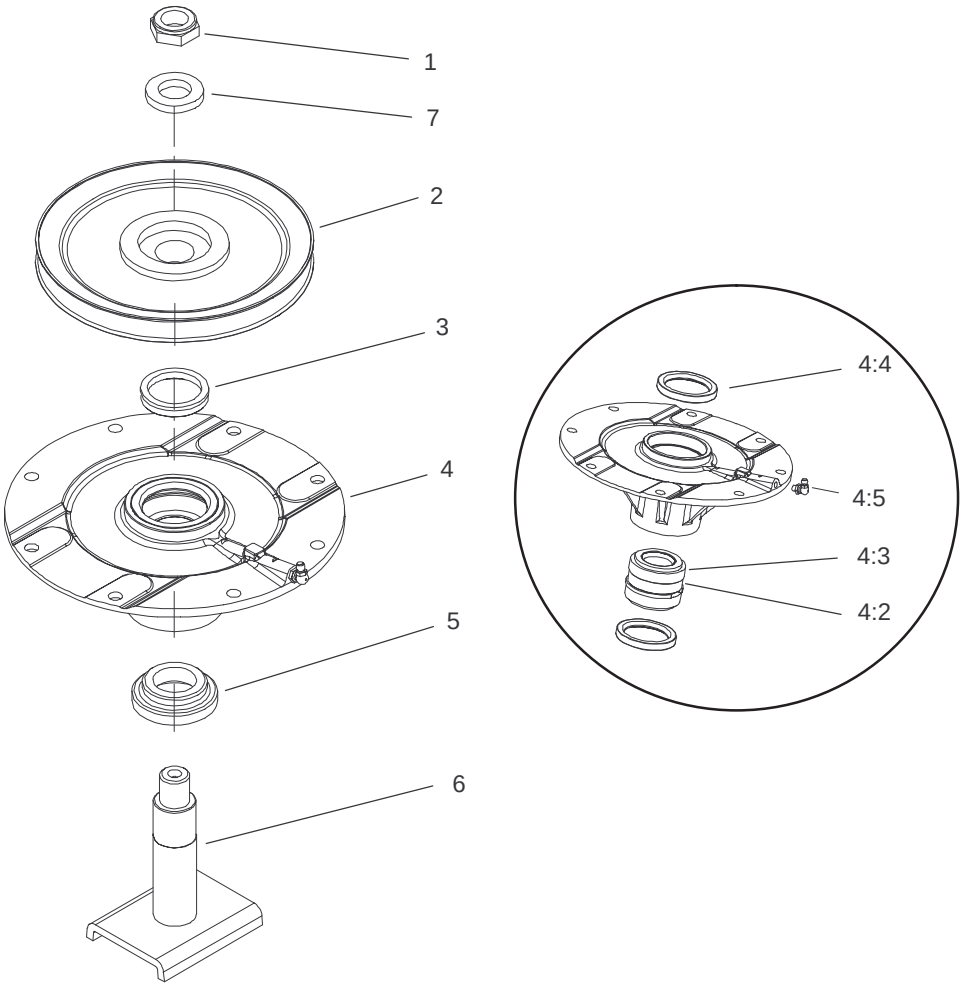

Sheet No.:A1

Spindle Assembly No. 104–3532 (RH and LH Deck)

Ref. No.	Part No.	Qty.	Description
1	3296–60	1	Nut–Lock, NI
2	104–3546	1	Pulley–Driven, Low
3	104–3564	1	Seal–V Ring
4	104–3552	1	Spindle Housing ASM
4:2	104–3549	1	Spacer Set–Bearing
4:3	26–1830	1	Bearing ASM
4:4	253–154	2	Seal–Oil
4:5	302–60	1	Fitting–Grease
5	92–9800	1	Spacer–Shaft, Spindle
6	104–3554	1	Spindle Shaft ASM
7	104–8322	1	Washer–Hardened

Ref. No.	Part No.	Qty.	Description

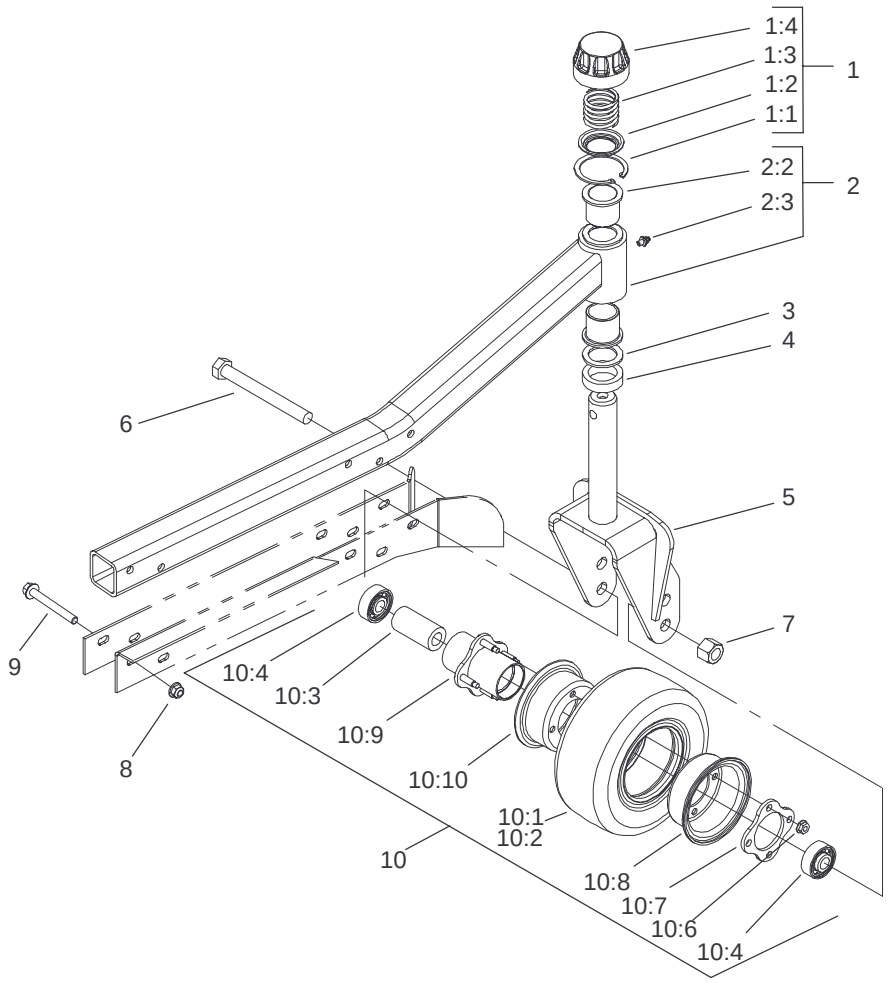

Sheet No.:3

Castor Arm and Tire Assembly (RH and LH Deck)

Ref. No.	Part No.	Qty.	Description
1	92–9727	1	HOC Cap ASM
1:1	92–5581	1	Ring–Retaining
1:2	92–5583	1	Washer–Cap
1:3	92–9726	1	Spring–Compression
1:4	92–8861	1	Cap–HOC
2	100–8093	1	Side Castor Arm ASM
2:2	104–8340	2	Bushing
2:3	302–5	1	Fitting–Grease
3	69–6860	2	Washer–Thrust
4	69–1510	5	Spacer–Castor
5	104–0762–01	1	Castor Fork ASM
6	327–24	3	Screw–HH
7	3296–53	3	Nut–Lock, NI
8	104–8301	5	Nut–Flange, NI
9	3234–41	5	Screw–HHF
10	93–9938	3	8 Inch Wheel ASM
10	93–5974	3	8 Inch Foam Filled Wheel ASM
10:1	93–9939	1	Tire
10:2	68–8950	1	Tube–Inner (W/Valve)
10:3	93–4241	1	Spacer–Bearing, Inner
10:4	93–4237	2	Bearing
10:6	32128–16	4	Nut–HHF
10:7	93–4242	1	Plate
10:8	93–4239	1	Rim–Wheel, Half

Ref. No.	Part No.	Qty.	Description
10:9	93–5980	1	Hub
10:10	95–2741	1	Rim–Wheel, Half

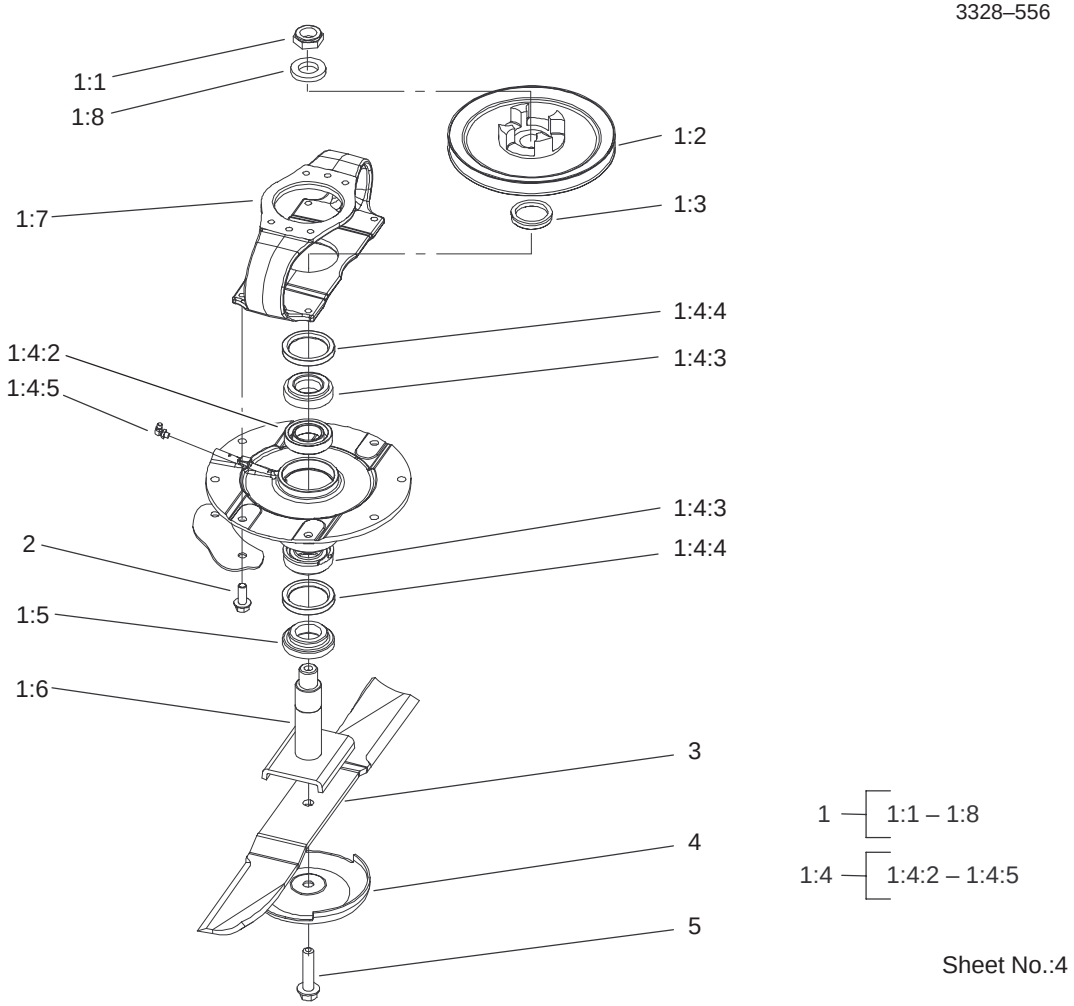

Spindle Assembly (RH and LH Deck)

Ref. No.	Part No.	Qty.	Description
1	104–3529	1	Driving Spindle ASM
1:1	3296–60	1	Nut–Lock, NI
1:2	104–3545	1	Pulley–Driving
1:3	104–3564	1	Seal–V Ring
1:4	104–3552	1	Spindle Housing ASM
1:4:2	104–3549	1	Spacer Set–Bearing
1:4:3	26–1830	1	Bearing ASM
1:4:4	253–154	2	Seal–Oil
1:4:5	302–60	1	Fitting–Grease
1:5	92–9800	1	Spacer–Shaft, Spindle
1:6	104–3554	1	Spindle Shaft ASM
1:7	104–3544	1	Mount–Drive Motor
1:8	104–8322	1	Washer–Hardened
2	3234–42	4	Screw–HHF
3	92–5608–03	2	Blade
4	72–9361	2	Cup–Scalp, Anti
5	92–5816	2	Bolt–Blade

Ref. No.	Part No.	Qty.	Description

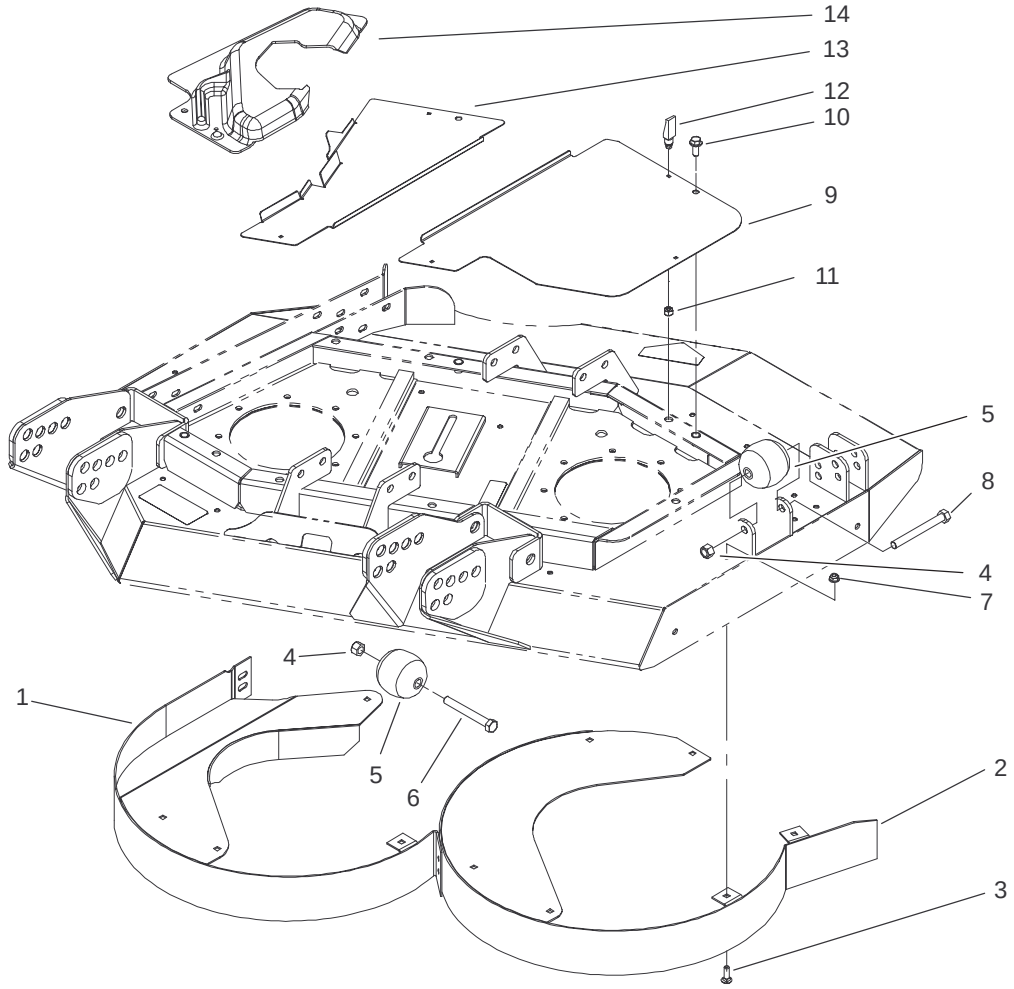

Sheet No.:5

Rear Discharge Chamber and Cover Assembly (RH Deck)

Ref. No.	Part No.	Qty.	Description
1	104–2203–01	1	Outer Chamber ASM
2	104–2204–01	1	Inner Chamber ASM
3	3230–18	11	Screw–CARR
4	3296–25	2	Nut–Lock, NI
5	29–4820	2	Roller
6	325–17	1	Screw–HH
7	104–8300	11	Nut–Flange, NI
8	325–18	1	Screw–HH
9	100–5668–03	1	Plate–Cover, RH Side
10	3234–42	3	Screw–HHF
11	1–804254	7	Nut
12	74–5950	7	Latch–Swell
13	100–5665–03	1	Plate–Cover, RH
14	100–5666	1	Cover–Motor, RH Deck

Ref. No.	Part No.	Qty.	Description

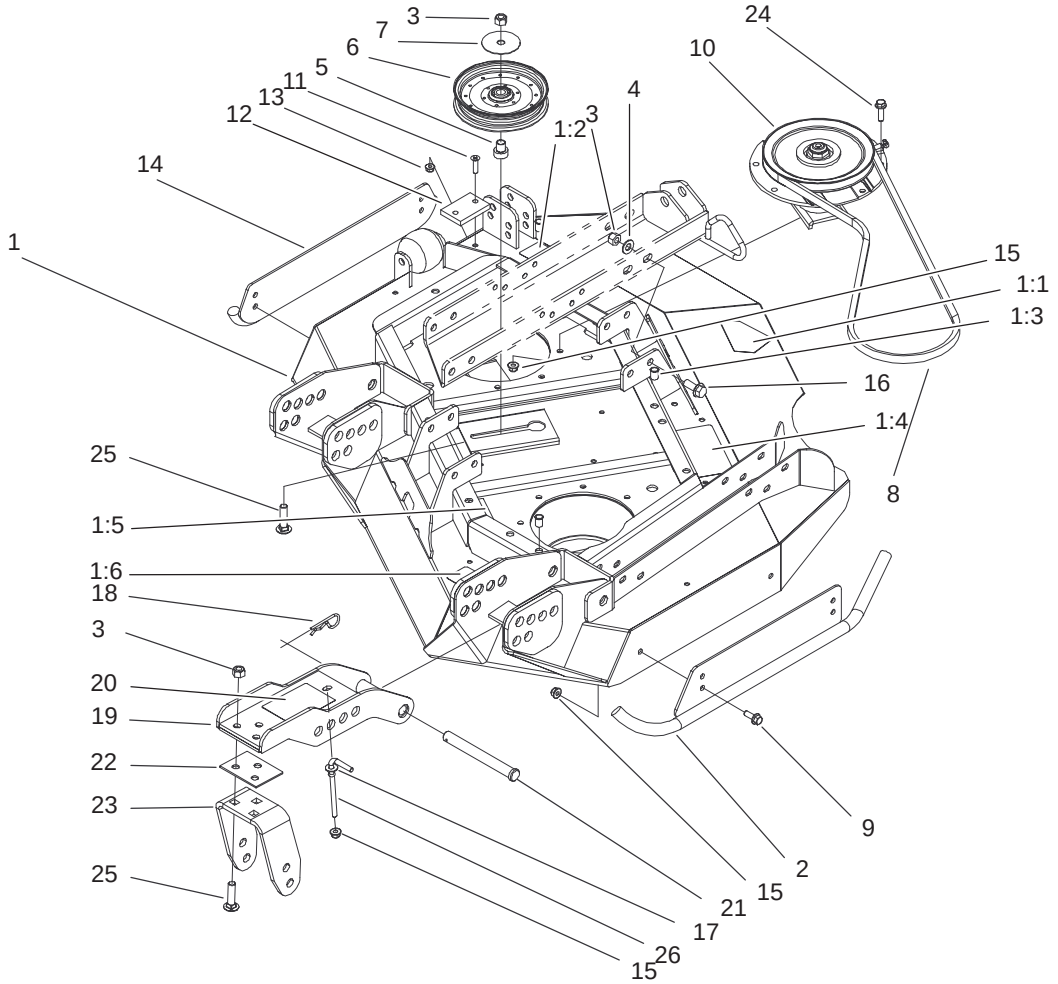

Sheet No.:2

LH Deck, Idler and Skid Assembly

Ref. No.	Part No.	Qty.	Description
1	100–3037	1	LH Side Deck ASM
1:1	43–8480	1	Decal–Danger
1:1	106–6753	1	Decal–Danger
1:2	100–5693	1	Decal–Rear HOC, LH
1:3	32148–9	3	Insert–Nut
1:4	100–5622	1	Decal–HOC
1:5	100–6578	3	Decal–Danger
1:6	93–7818	1	Decal–Torque, Blade Bolt
2	100–8125–01	1	LH Skid ASM
3	3296–25	15	Nut–Lock, NI
4	3256–26	8	Washer–Flat
5	100–2984	1	Spacer–Idler
6	99–5493	1	Pulley–Idler
7	100–3102	1	Washer–Flat
8	55–7660	1	V–Belt
9	3234–42	4	Screw–HHF
10	104–3532	1	Low Driven Spindle ASM
11	32108–103	2	Screw–FH
12	69–9290	1	Pad–Bumper
13	104–8300	2	Nut–Flange, NI
14	104–2250–01	1	Skid ASM–Side
15	104–8301	22	Nut–Flange, NI
16	3234–38	8	Screw–HHF
17	3256–3	2	Washer–Flat

Ref. No.	Part No.	Qty.	Description
18	3290–343	4	Pin–Hair
19	104–7529–01	2	Castor Bracket ASM
20	104–3579	1	Decal–HOC, LH
21	100–5569	4	Pin–Clevis
22	104–7524	8	Shim
23	104–7525–01	2	Bracket–Fork
24	3234–24	12	Screw–HHF
25	3233–4	7	Screw–CARR
26	106–2047	2	Rod–Tension

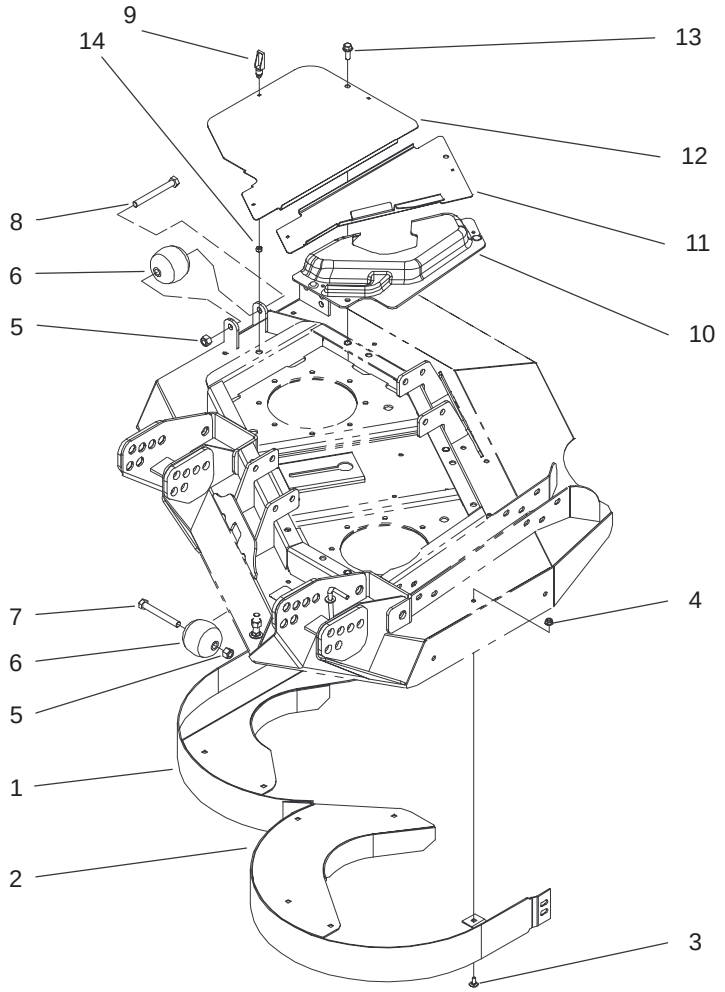

Sheet No.:5

Rear Discharge Chamber and Cover Assembly (LH Deck)

Ref. No.	Part No.	Qty.	Description
1	104–2205–01	1	Inner Chamber ASM
2	104–2206–01	1	Outer Chamber ASM
3	3230–18	9	Screw–CARR
4	104–8300	9	Nut–Flange, NI
5	3296–25	2	Nut–Lock, NI
6	29–4820	2	Roller
7	325–17	1	Screw–HH
8	325–18	1	Screw–HH
9	74–5950	7	Latch–Swell
10	100–5669	1	Cover–Motor, LH Deck
11	100–5664–03	1	Plate–Cover, LH
12	100–5667–03	1	Plate–Cover, LH Side
13	3234–42	3	Screw–HHF
14	1–804254	7	Nut

Ref. No.	Part No.	Qty.	Description

Electrical Schematic

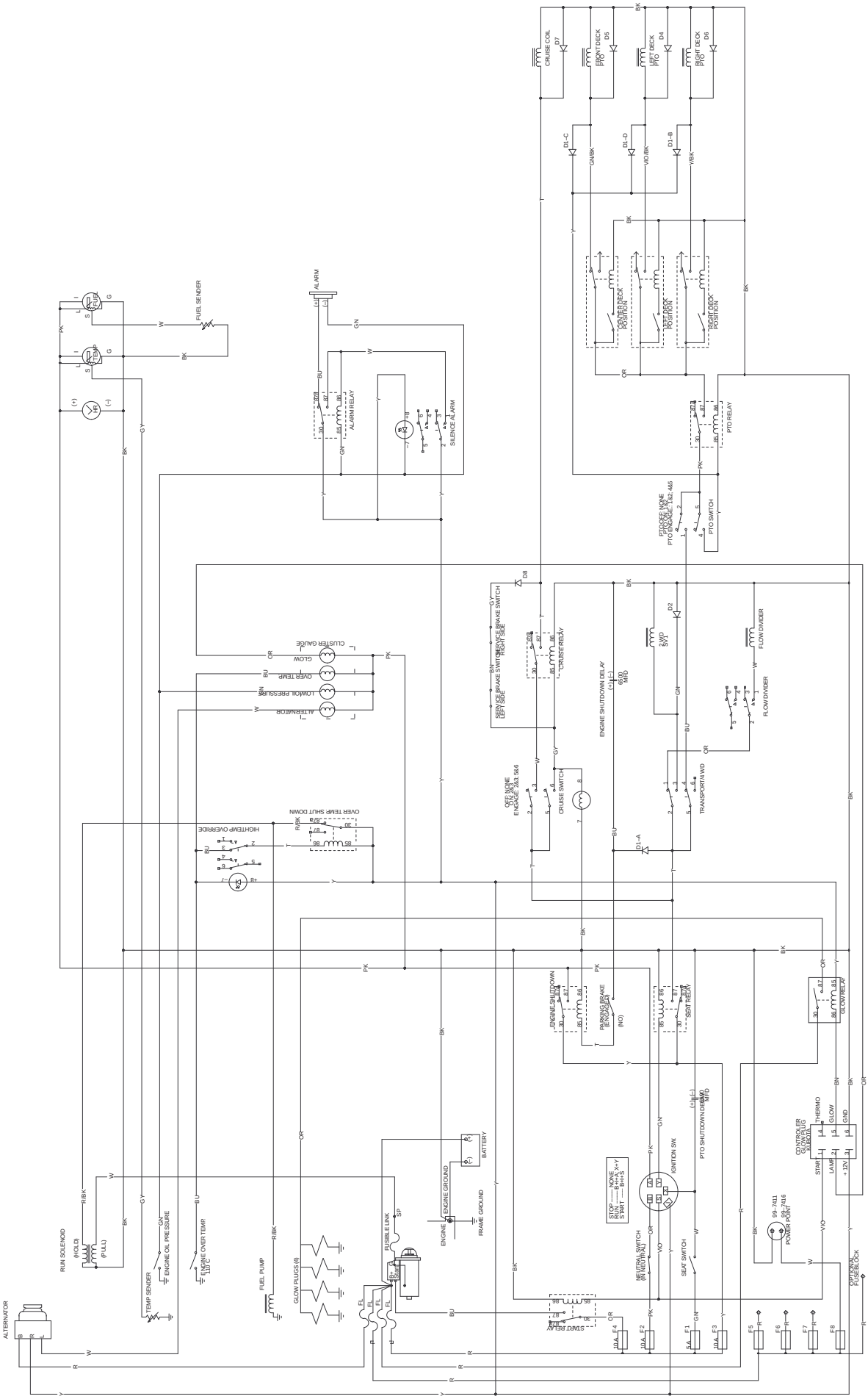

Hydraulic Schematic

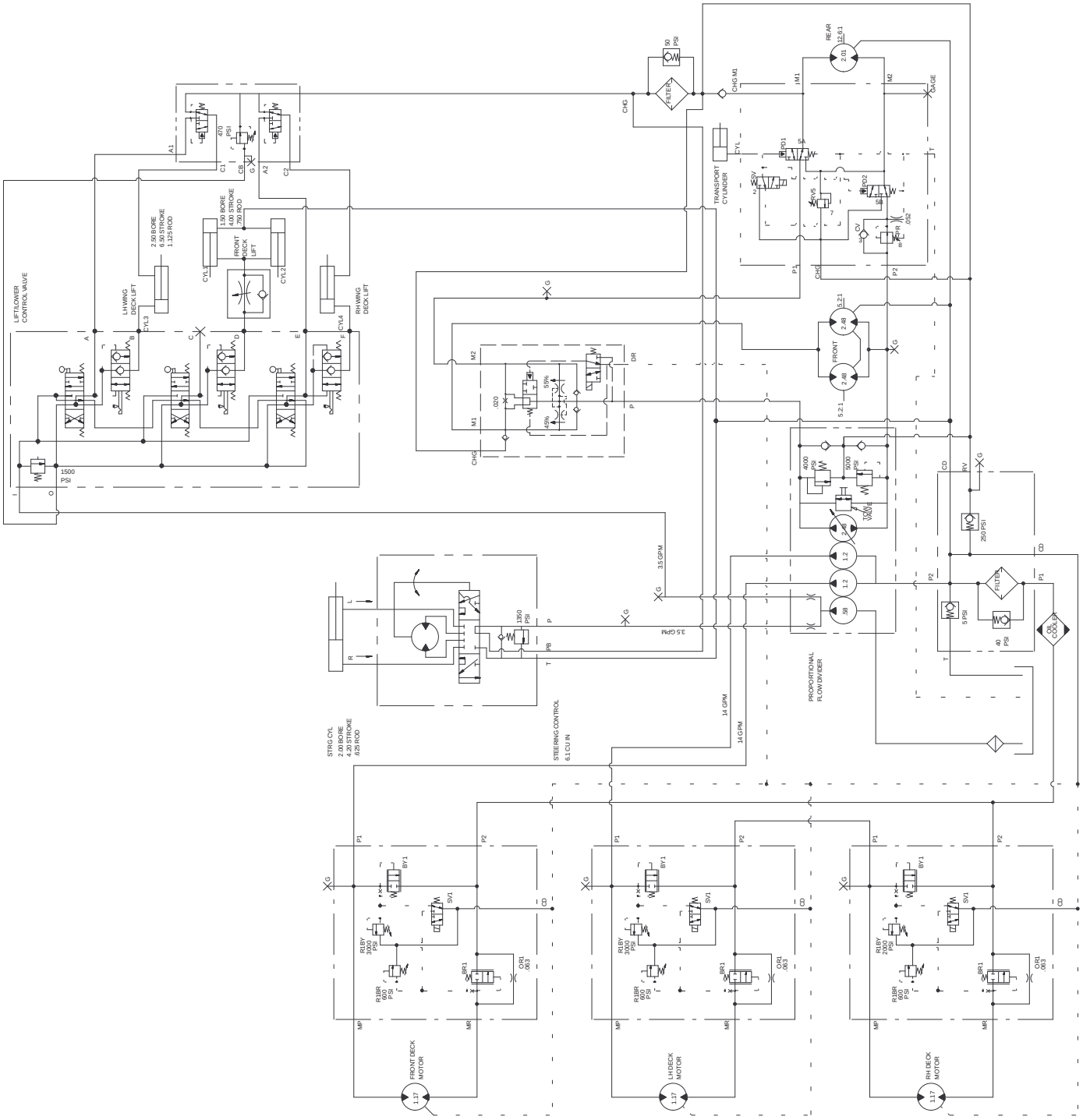

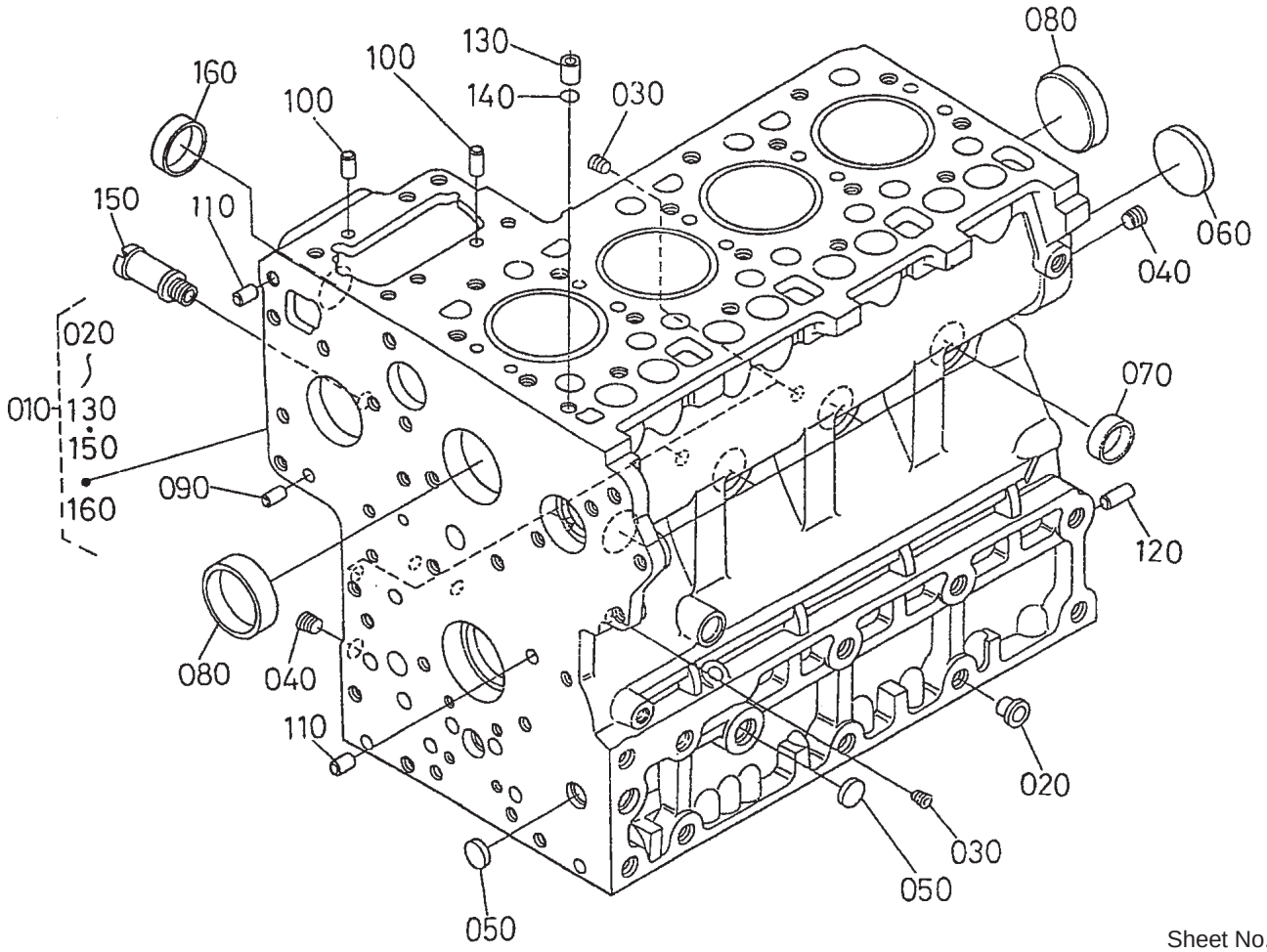

Sheet No.:40

Crankcase Assembly

Ref. No.	Part No.	Qty.	Description
010	100–9150	1	Crankcase
020	98–7486	2	Plug
030	98–7487	6	Plug
040	98–7488	2	Plug
050	98–7489	3	Plug
060	98–7490	1	Plug
070	98–7500	6	Cap – Sealing
080	98–7501	2	Cap – Sealing
090	98–7502	2	Pin – Straight
100	98–7503	2	Pin – Straight
110	98–7504	2	Pin – Straight
120	98–7505	1	Pin – Straight
130	98–7506	1	Pin–Pipe
140	98–7509	1	O–Ring
150	100–9153	1	Pipe–Return, Water
160	105–2883	1	Cap–Sealing

Ref. No.	Part No.	Qty.	Description

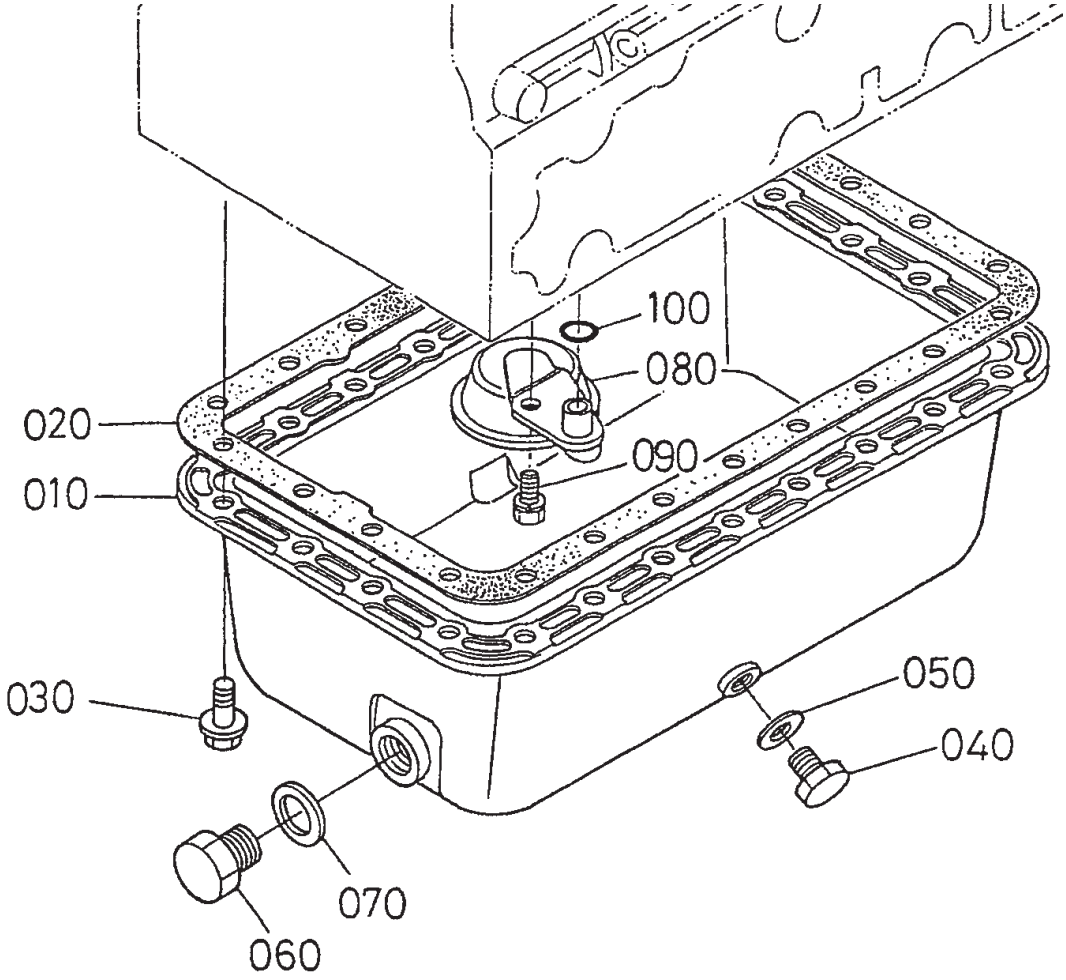

Sheet No.:41

Oil Pan Assembly

Ref. No.	Part No.	Qty.	Description
010	98–7520	1	Pan–Oil
020	98–7521	1	Gasket
030	98–7522	24	Bolt–Flange
040	98–9386	1	Plug
050	98–7524	1	Gasket
060	98–7529	1	Plug–Drain
070	98–7527	1	O–Ring
080	98–7525	1	Filter–Oil
090	98–7526	1	Bolt
100	98–7528	1	O–Ring

Ref. No.	Part No.	Qty.	Description

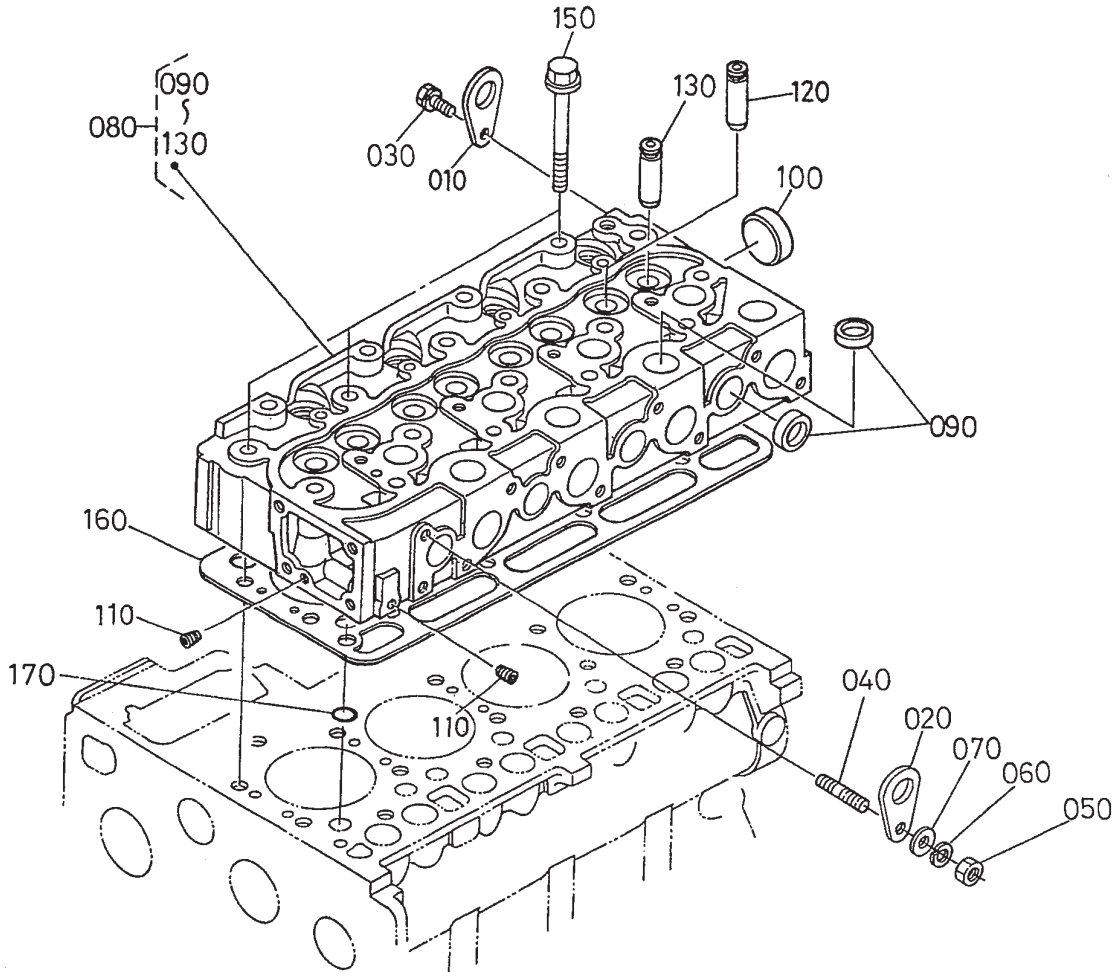

Sheet No.:42

Cylinder Head Assembly

Ref. No.	Part No.	Qty.	Description
010	98–7530	1	Hook–Engine
020	98–7531	1	Hook–Engine
030	98–7526	1	Bolt
040	98–7533	1	Stud
050	100–1559	1	Nut–Manifold, Exhaust
060	99–8339	1	Washer–Spring
070	98–7536	1	Washer–Plain
080	100–9159	1	Head–Cylinder
090	98–7538	12	Cap–Sealing
100	98–7539	1	Cap–Sealing
110	98–7540	2	Cap–Sealing
120	98–7541	4	Plug
130	98–7542	4	Guide–Valve, Exhaust
150	98–7543	18	Bolt–Head, Cylinder
160	100–9160	1	Gasket–Head, Cylinder
170	98–7509	1	O–Ring

Ref. No.	Part No.	Qty.	Description

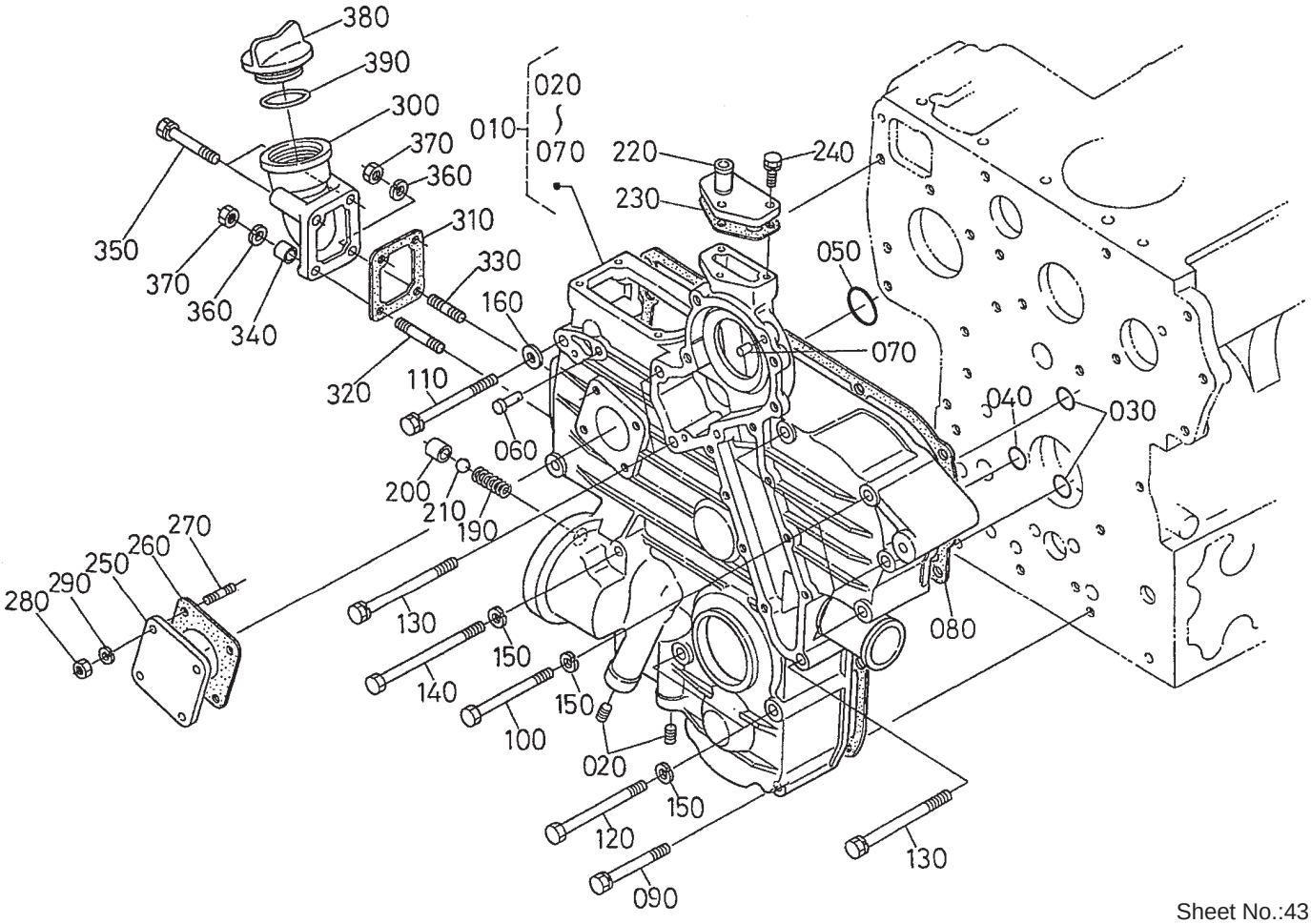

Sheet No.:43

Gear Case Assembly

Ref. No.	Part No.	Qty.	Description
010	100–9161	1	Gearcase ASM
020	98–7546	2	Plug
030	98–7547	2	O–Ring
040	98–7548	1	O–Ring
050	98–7549	1	O–Ring
060	98–7550	1	Pin–Spring, Start
070	98–7504	2	Pin – Straight
080	98–7552	1	Packing–Case, Gear
090	98–7553	2	Bolt
100	99–8336	5	Bolt
110	98–7555	1	Bolt
120	98–7556	2	Bolt
130	98–7557	3	Bolt
140	98–7558	2	Bolt
150	99–8339	9	Washer–Spring
160	98–7536	1	Washer–Plain
190	98–7563	1	Spring
200	98–7564	1	Seat–Valve
210	98–7565	1	Ball
220	98–7566	1	Flange–Return, Water
230	98–7567	1	Gasket
240	98–7568	3	Bolt
250	98–7569	1	Cover
260	98–7570	1	Gasket–Unit, H/Meter
270	98–7571	4	Stud
280	98–7572	4	Nut

Ref. No.	Part No.	Qty.	Description
290	98–7699	4	Washer–Spring
300	100–9162	1	Flange–Filter, Oil
310	100–9163	1	Gasket
320	98–7571	1	Stud
330	100–9164	1	Stud
340	100–9165	1	Collar
350	98–7496	2	Bolt
360	98–7699	2	Washer–Spring
370	98–7572	2	Nut
380	98–7429	1	Plug–Filter, Oil
390	98–7430	1	O–Ring

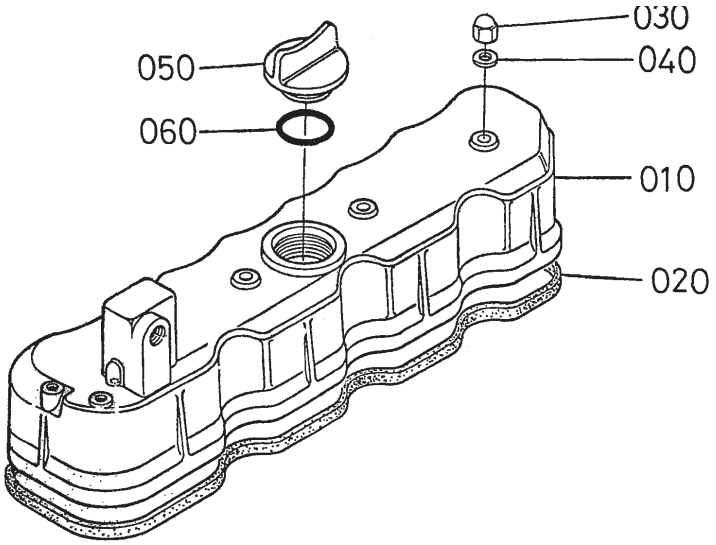

Sheet No.:44

Head Cover Assembly

Ref. No.	Part No.	Qty.	Description
010	98–7425	1	Cover–Head, Cylinder
020	98–7426	1	Gasket–Cover, Head
030	98–7427	4	Nut – Cap
040	98–7428	4	Gasket
050	98–7429	1	Plug–Filter, Oil
060	98–7430	1	O–Ring

Ref. No.	Part No.	Qty.	Description

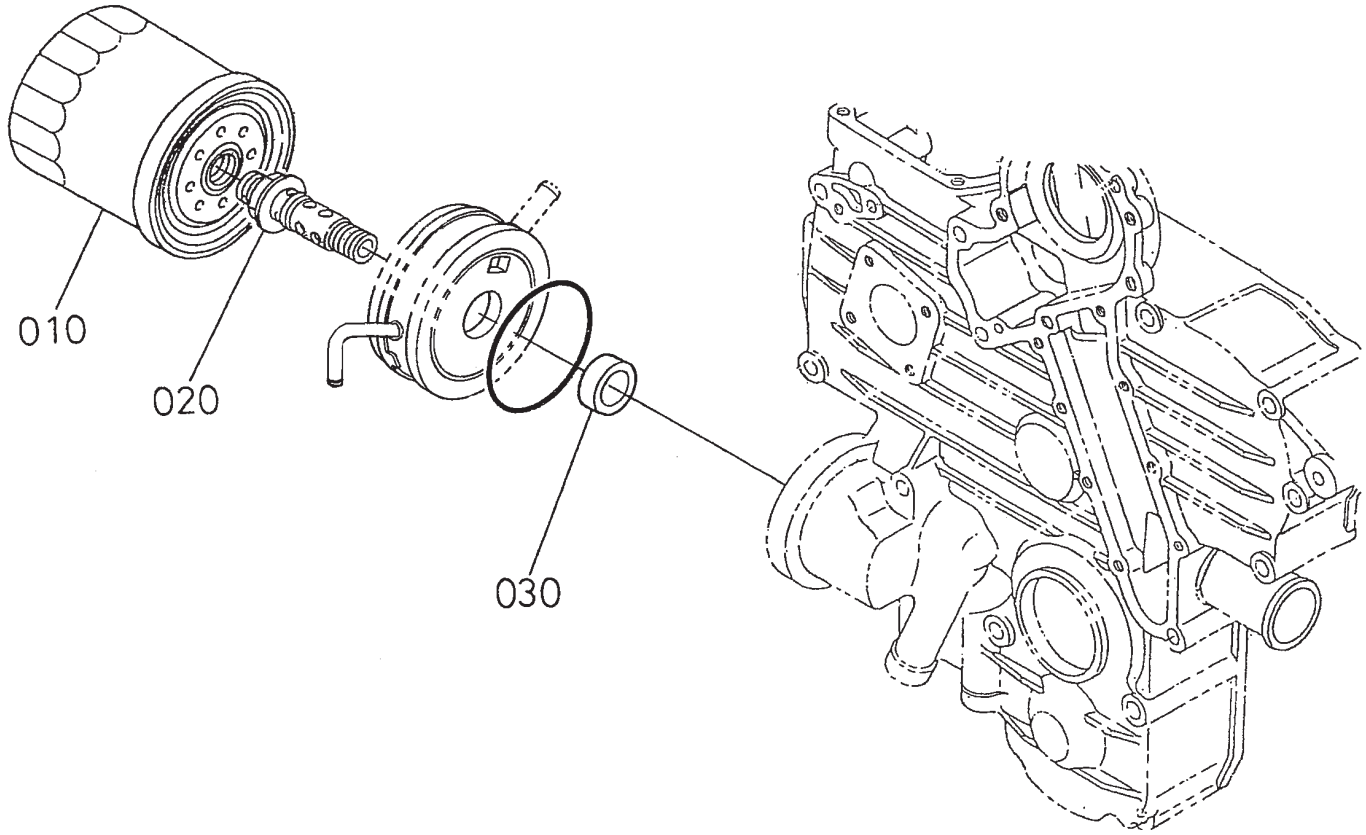

Sheet No.:45

Oil Filter Assembly

Ref. No.	Part No.	Qty.	Description
010	98–7431	1	Cartridge–Filter, Oil
020	100–9166	1	Connector
030	100–9167	1	Collar

Ref. No.	Part No.	Qty.	Description

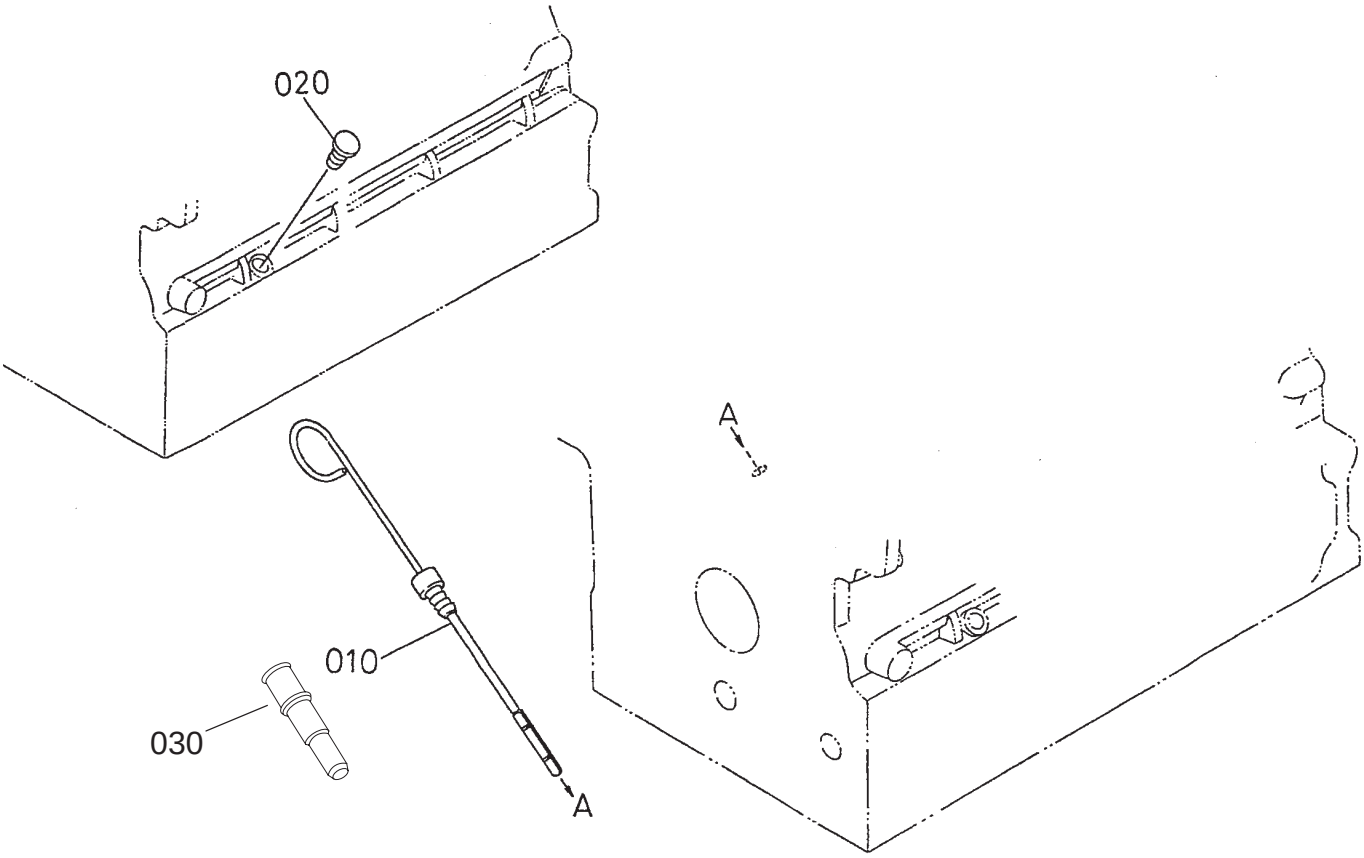

Sheet No.:46

Dipstick and Guide Assembly

Ref. No.	Part No.	Qty.	Description
010	105–4579	1	Gauge–Oil
020	100–9169	1	Plug–Gauge, Oil
030	105–4580	1	Guide

Ref. No.	Part No.	Qty.	Description

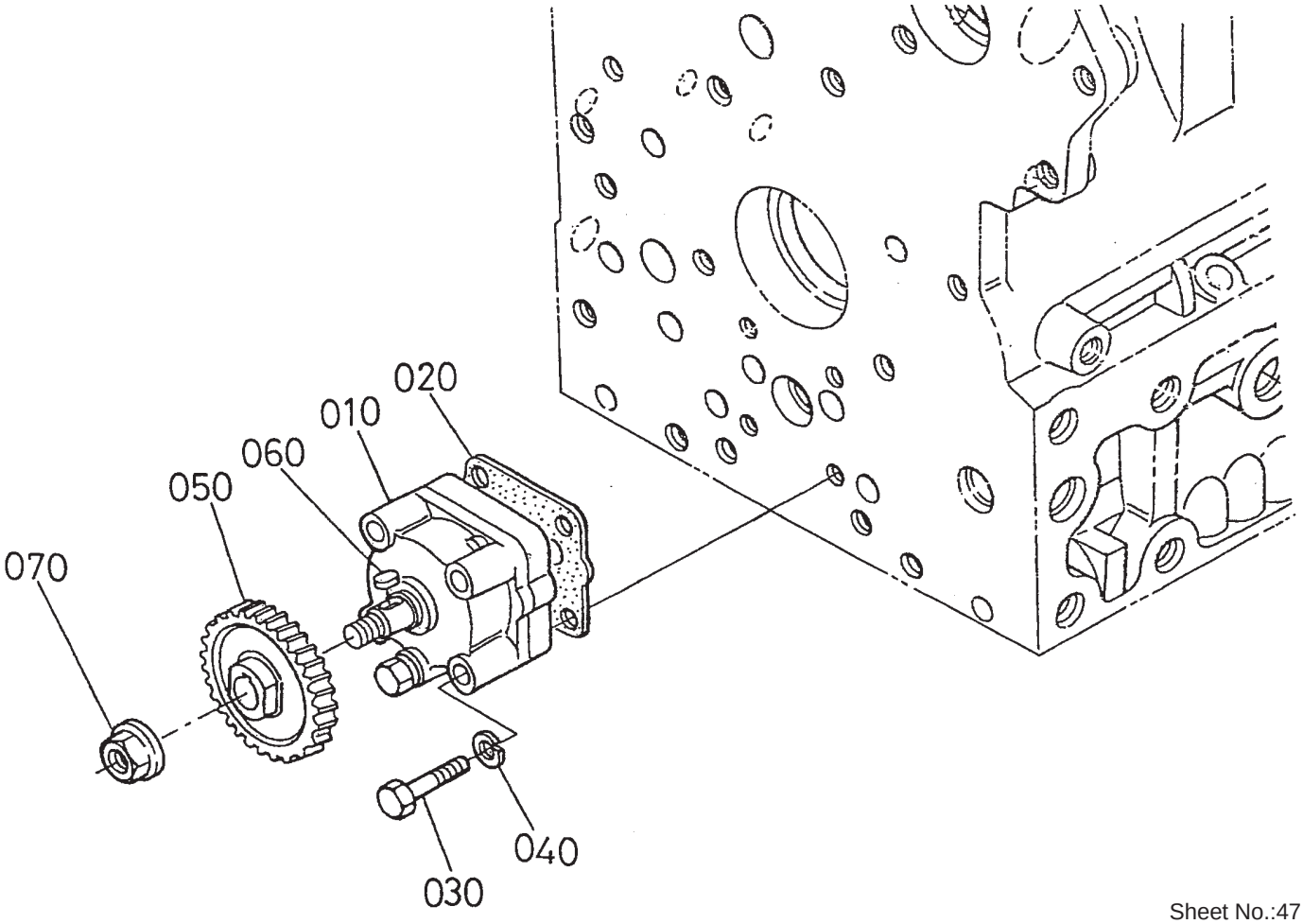

Sheet No.:47

Oil Pump Assembly

Ref. No.	Part No.	Qty.	Description
010	100–9170	1	Oil Pump ASM
020	98–7513	1	Gasket–Pump, Oil
030	98–7514	4	Bolt
040	98–7699	4	Washer–Spring
050	98–7516	1	Gear–Drive, Oil Pump
060	98–7517	1	Key – Feather
070	98–7518	1	Nut – Flange

Ref. No.	Part No.	Qty.	Description

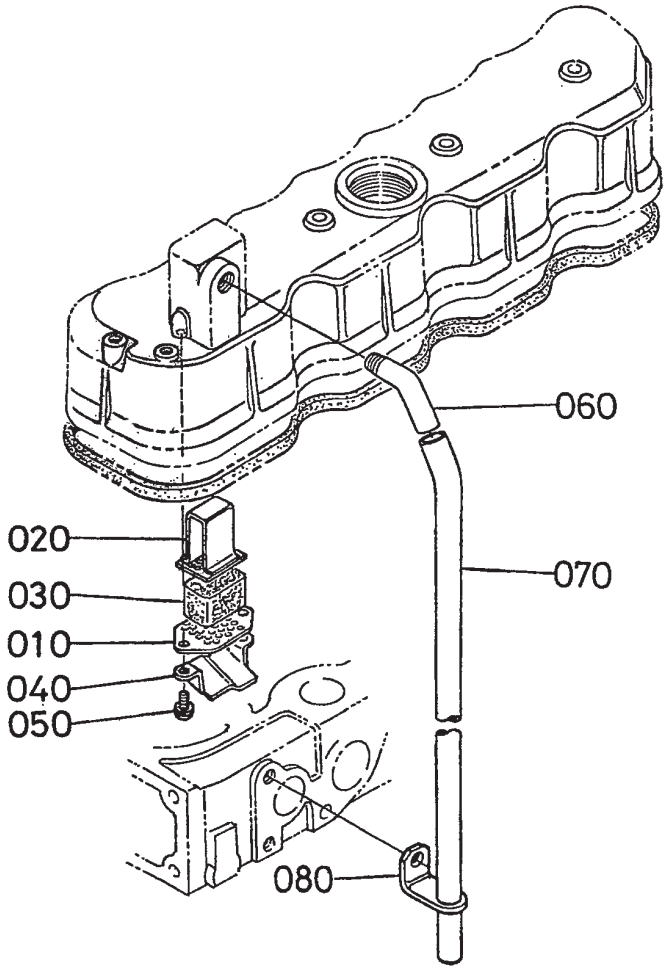

Sheet No.:48

Breather Assembly

Ref. No.	Part No.	Qty.	Description
010	98–7417	1	Plate – Element
020	98–7418	1	Plate – Element
030	98–7419	1	Element – Breather
040	98–7420	1	Shield–Breather, Oil
050	98–7421	2	Screw W/Washer
060	98–7422	1	Joint–Pipe, Breather
070	98–7423	1	Pipe – Breather
080	98–7424	1	Clamp – Pipe

Ref. No.	Part No.	Qty.	Description

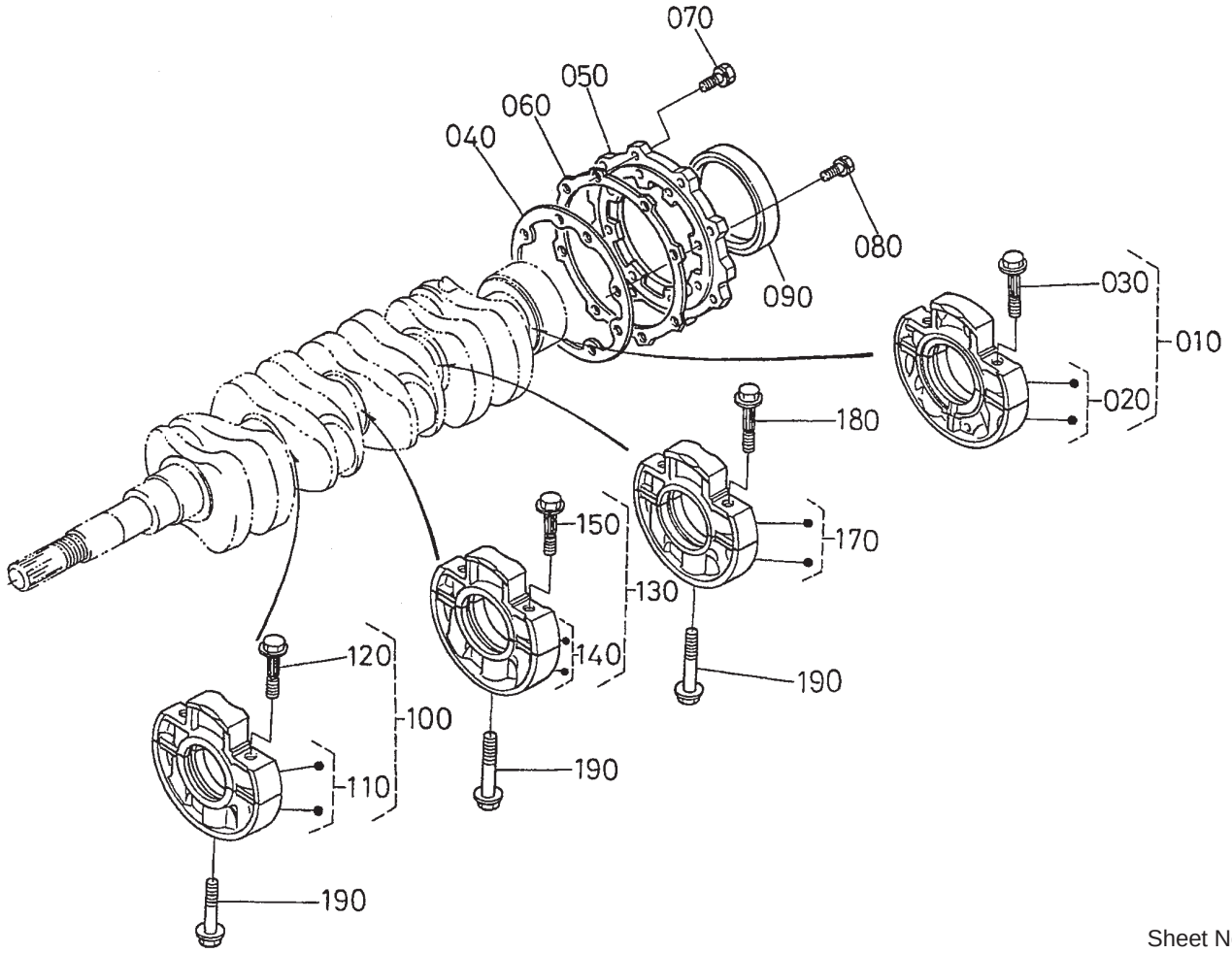

Sheet No.:49

Main Bearing Case

Ref. No.	Part No.	Qty.	Description
010	100–9172	1	Wheel Bearing Case ASM
020	100–9173	1	Bearing Case ASM
030	98–7434	2	Bolt–Case, Bearing
040	98–7435	1	Gasket–Case, Bearing
050	98–7436	1	Cover–Case, Bearing
060	98–7437	1	Gasket–Case Cover, Bearing
070	98–7438	8	Bolt
080	98–7439	8	Bolt
090	98–7440	1	Seal – Oil
100	100–9174	1	Main Bearing Case ASM
110	100–9175	1	Bearing Case ASM
120	98–7434	2	Bolt–Case, Bearing
130	100–9176	1	Main Bearing Case ASM
140	100–9177	1	Bearing Case ASM
150	98–7434	2	Bolt–Case, Bearing
170	100–9178	1	Bearing Case ASM
180	98–7434	2	Bolt–Case, Bearing
190	98–7444	3	Bolt–Case, Bearing

Ref. No.	Part No.	Qty.	Description

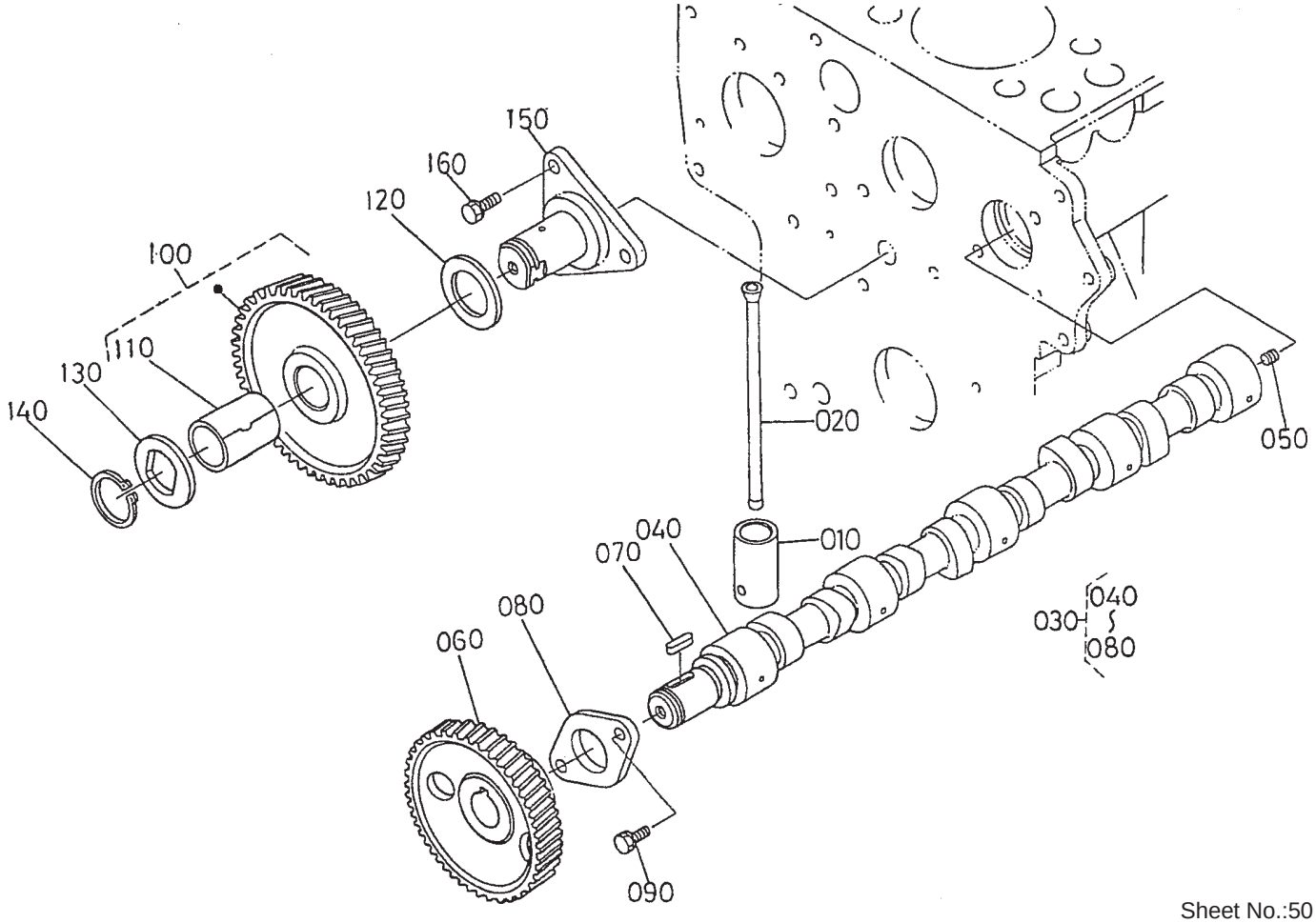

Sheet No.:50

Camshaft and Idler Gear Shaft Assembly

Ref. No.	Part No.	Qty.	Description
010	98–7445	8	Tappet
020	98–7446	8	Rod–Push
030	100–9179	1	Camshaft ASM
040	100–9180	1	Camshaft
050	98–7449	1	Screw–Set
060	98–7450	1	Gear – Camshaft
070	98–7451	1	Key – Feather
080	98–7452	1	Stopper – Camshaft
090	98–7453	2	Bolt
100	98–7454	1	Gear – Idler, Complete
110	98–7455	1	Bushing–Gear, Idler
120	98–7456	1	Collar
130	98–7457	1	Collar
140	98–7458	1	Cir–Clip – External
150	98–7459	1	Shaft–Gear, Idler
160	98–7453	3	Bolt

Ref. No.	Part No.	Qty.	Description

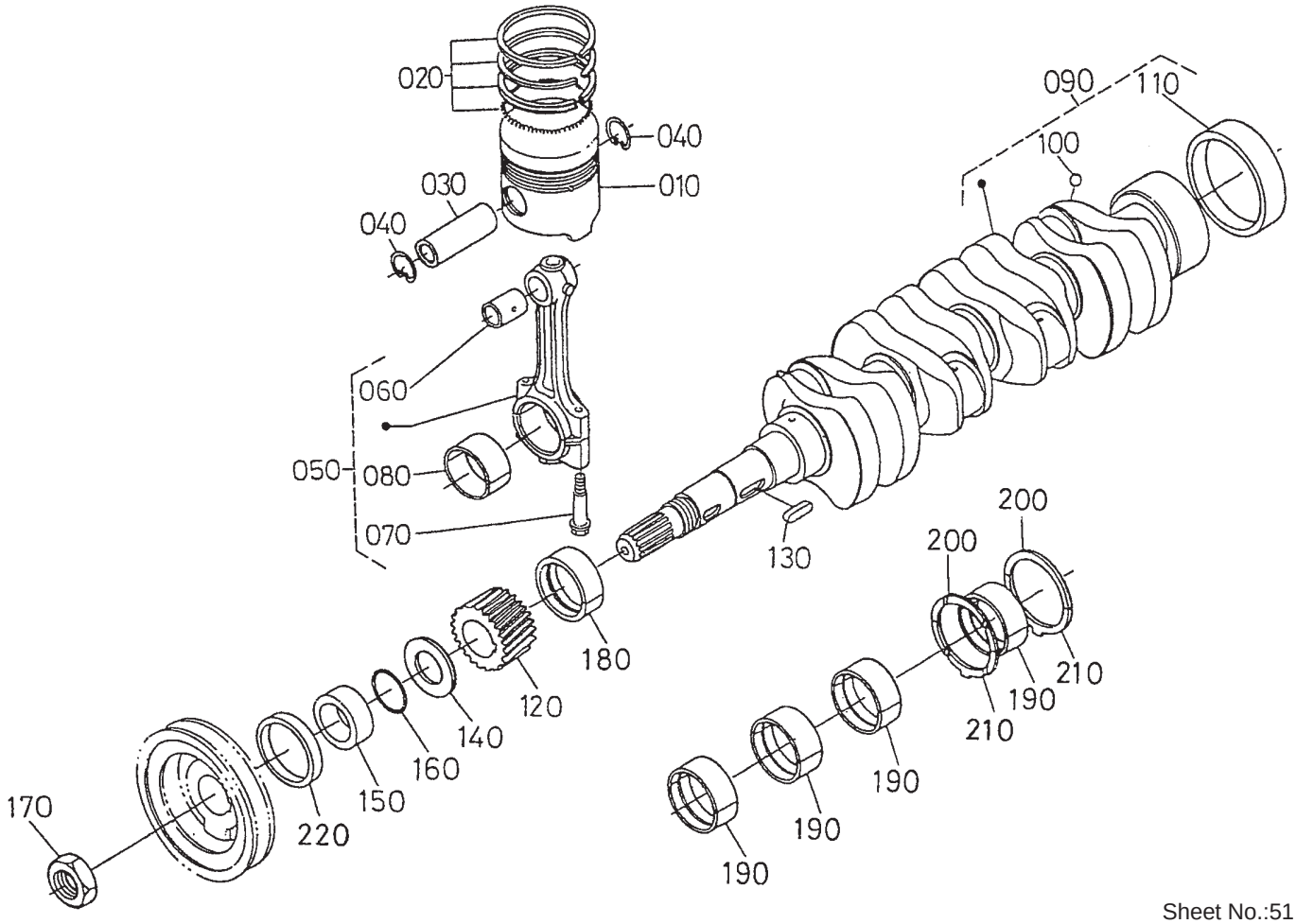

Sheet No.:51

Piston and Crankshaft Assembly

Ref. No.	Part No.	Qty.	Description
010	99–5435	1	Piston (+.50mm)
010	100–9181	4	Piston, STD
020	100–9182	4	Piston Ring ASM, STD
020	99–5436	1	Piston Ring ASM (+0.50mm)
030	98–7464	4	Pin – Piston
040	98–7465	8	Clip–Pin, Piston
050	98–7466	4	Connecting Rod ASM
060	98–7467	4	Bushing–Pin, Piston
070	98–7468	8	Bolt–Rod, Connecting
080	98–7471	4	Metal–Crankpin, –0.40 Mm
080	98–7470	4	Metal–Crankpin, –0.20 Mm
080	98–7469	4	Metal–Crankpin, STD
090	98–7472	1	Crankshaft–Complete
100	98–7473	4	Ball
110	98–7474	1	Sleeve – Crankshaft
120	98–7475	1	Gear – Crankshaft
130	98–7451	1	Key – Feather
140	98–7476	1	Slinger – Oil
150	98–7477	1	Collar – Crankshaht
160	98–7478	1	O–Ring
170	98–7479	1	Nut – Crankshaft
180	98–7483	1	Metal – Crankshaft, –0.40 Mm

Ref. No.	Part No.	Qty.	Description
180	98–7482	1	Metal – Crankshaft, –0.20 Mm
180	98–7481	1	Metal – Crankshaft, STD
190	99–6863	4	Metal–Crankshaft, –0.40 Mm
190	99–6862	4	Metal–Crankshaft, –0.20 Mm
190	98–7484	4	Metal – Crankshaft. STD
200	98–9415	2	Bearing–Thrust (0.4mm)
200	98–9414	2	Bearing–Thrust (0.2mm)
200	99–6864	2	Metal – Side, STD
210	99–6869	2	Metal – Side, O/S 0.4mm
210	98–9689	2	Bearing–Thrust (+0.2mm)
210	99–6867	2	Metal – Side, STD
220	98–7480	1	Seal – Oil

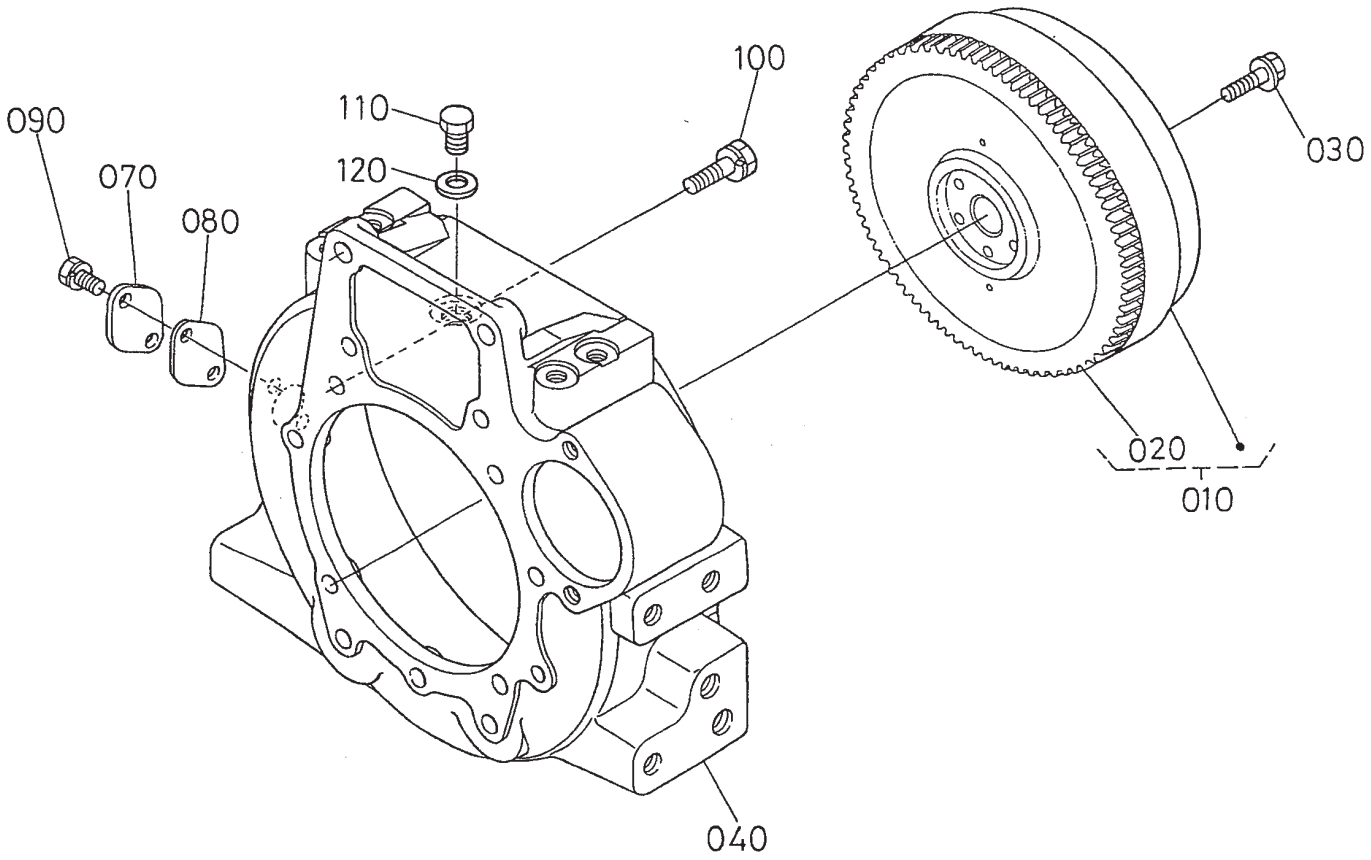

Sheet No.:52

Flywheel Assembly

Ref. No.	Part No.	Qty.	Description
010	98–7532	1	Flywheel
020	98–7560	1	Gear–Ring
030	98–7573	6	Bolt–Flywheel
040	98–7559	1	Housing–Flywheel
070	98–7883	1	Cover
080	98–7886	1	Gasket
090	105–4577	2	Bolt
100	98–7885	11	Bolt
110	98–7546	1	Plug
120	100–9194	1	Washer–Plain

Ref. No.	Part No.	Qty.	Description

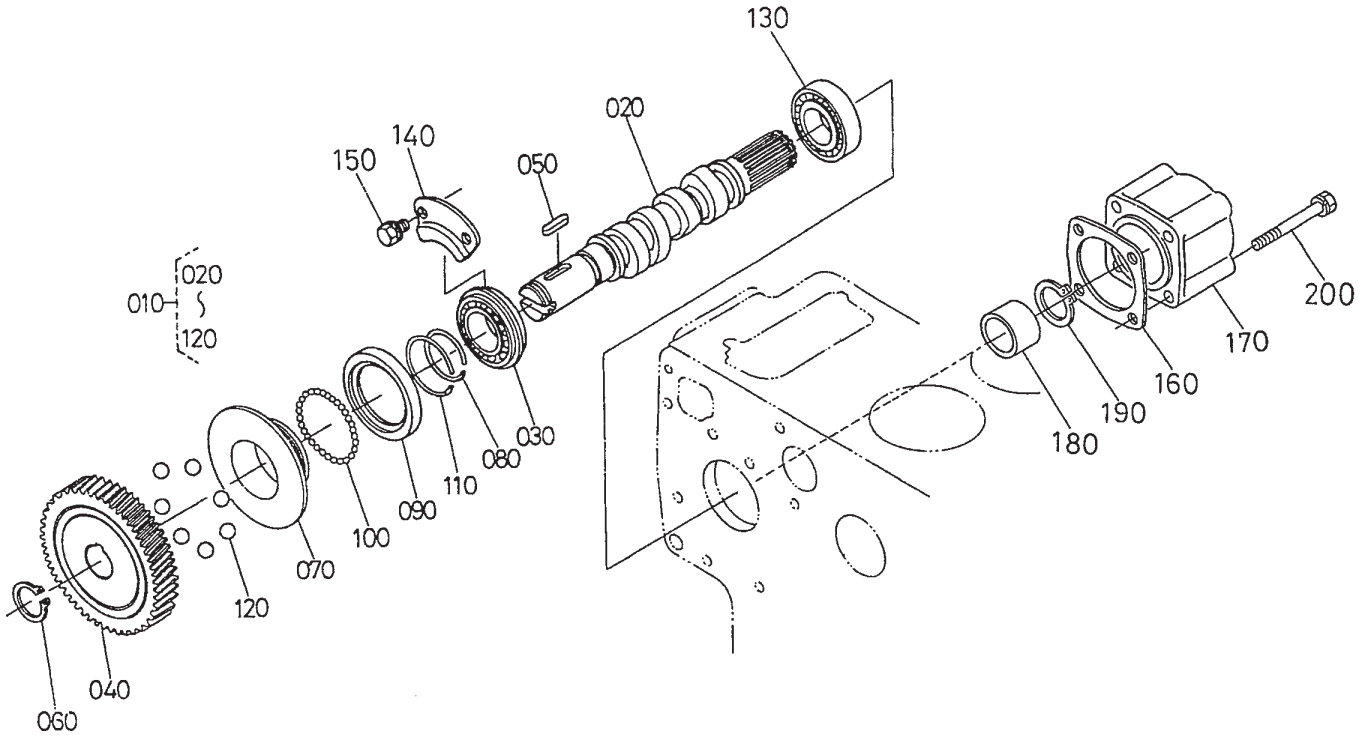

Sheet No.:53

Fuel Camshaft and Governor Shaft Assembly

Ref. No.	Part No.	Qty.	Description
010	98–7551	1	Fuel Camshaft ASM
020	98–7508	1	Camshaft – Fuel
030	98–7595	1	Bearing–Ball
040	98–7574	1	Gear–Pump, Injection
050	98–7575	1	Key–Feather
060	98–7576	1	Cir–Clip – External
070	98–7577	1	Sleeve–Governor
080	98–7578	1	Clip–Cir., Governor Sleeve
090	98–7579	1	Case–Ball, Governor
100	98–7580	39	Ball
110	98–7581	1	Clip–Cir.
120	98–7582	7	Ball
130	98–7583	1	Bearing–Ball
140	98–7584	1	Stopper
150	100–9195	2	Bolt
160	98–7588	1	Gasket
170	98–7586	1	Cover–Fuel, Camshaft
180	98–7587	1	Collar
190	98–7589	1	Clip–Cir., External
200	98–7590	4	Bolt

Ref. No.	Part No.	Qty.	Description

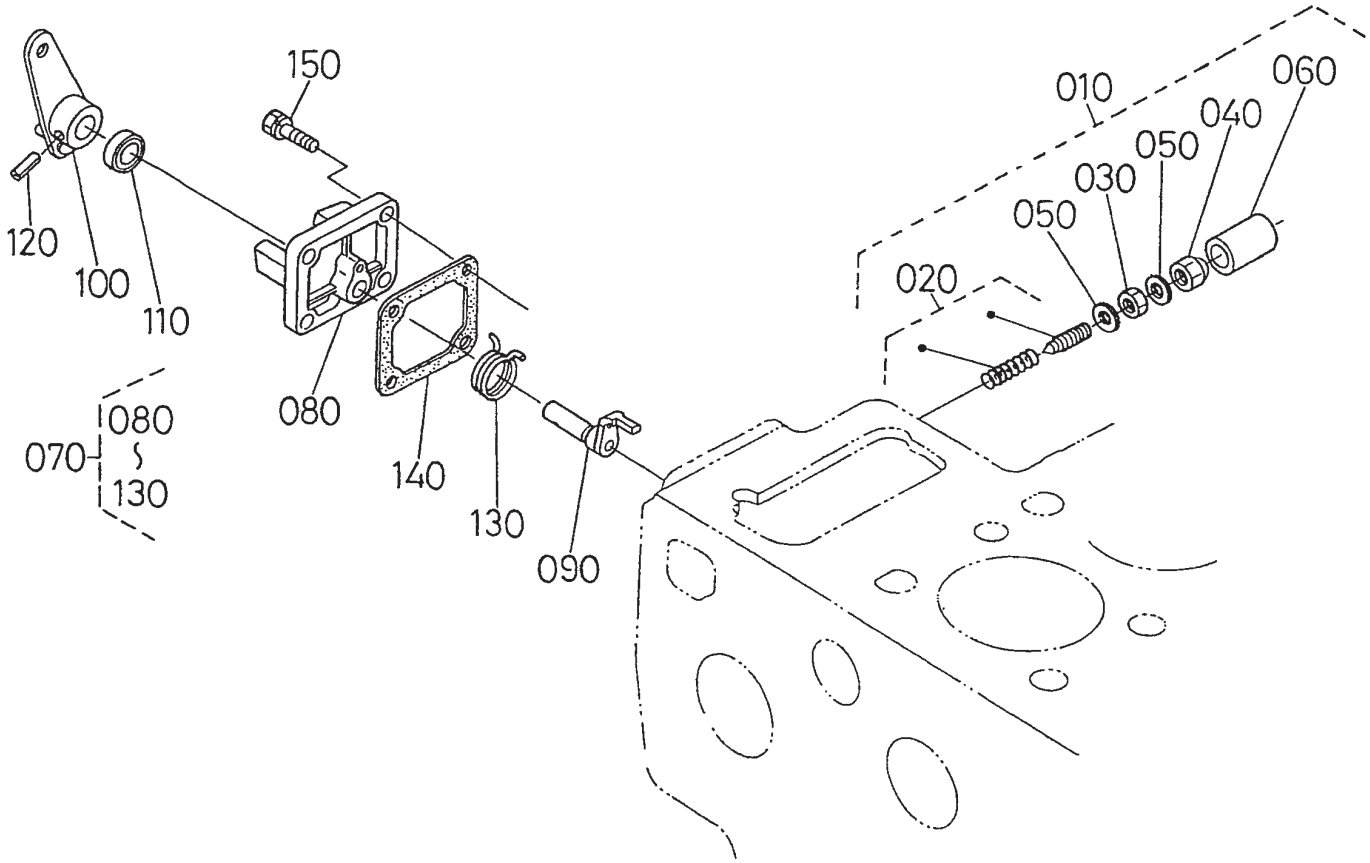

Sheet No.:54

Engine Stop Lever Assembly

Ref. No.	Part No.	Qty.	Description
010	98–7591	1	I/D Appartus ASM
020	98–7592	1	Adjusting Bolt ASM
030	98–7593	1	Nut
040	98–7594	1	Nut–Cap
050	98–7428	2	Gasket
060	98–7596	1	Cap
070	100–9198	1	Eng Stop Lever ASM
080	98–7598	1	Cover–Pump, Injection
090	100–9200	1	Shaft–Lever
100	98–7600	1	Lever–Stop, Engine
110	98–7601	1	Seal–Oil
120	98–7602	1	Pin–Spring
130	98–7603	1	Spring–Return
140	98–7604	1	Gasket–Cover, Pump
150	98–7605	4	Bolt

Ref. No.	Part No.	Qty.	Description

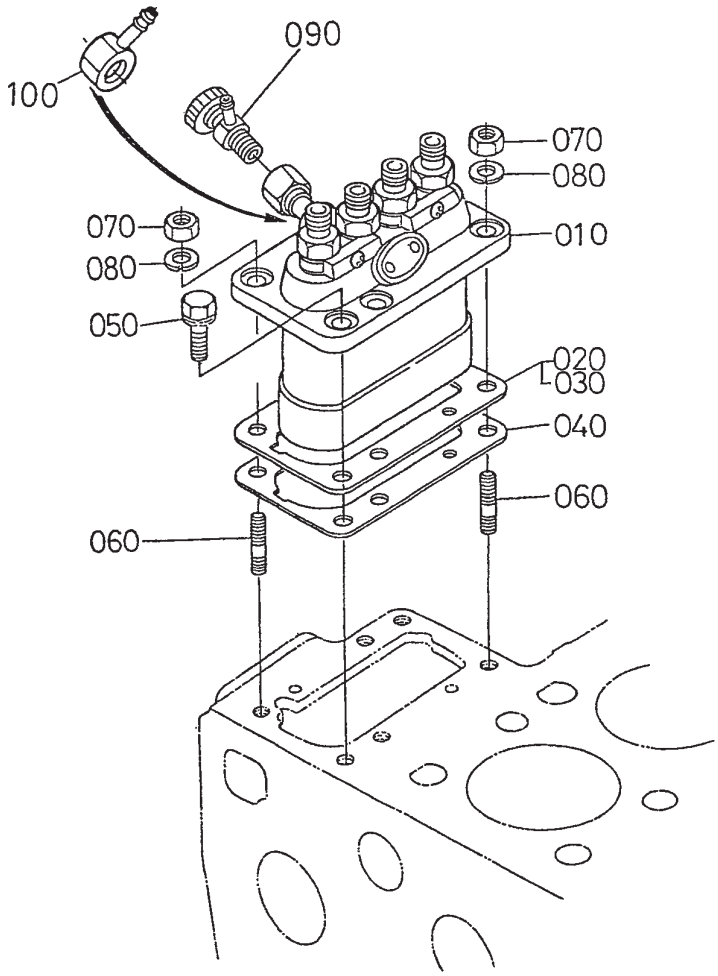

Sheet No.:55

Injection Pump Assembly

Ref. No.	Part No.	Qty.	Description
010	100–9201	1	Injection Pump ASM
020	98–7607	1	Shim
030	98–7608	1	Shim
040	98–7609	1	Shim–Pump, Injection
050	98–7610	4	Bolt
060	100–1558	2	Stud–Manifold, Exhaust
070	98–7534	2	Nut
080	99–8339	2	Washer–Spring
090	100–9202	1	Jet Start Cock ASM
100	98–7617	1	Joint

Ref. No.	Part No.	Qty.	Description

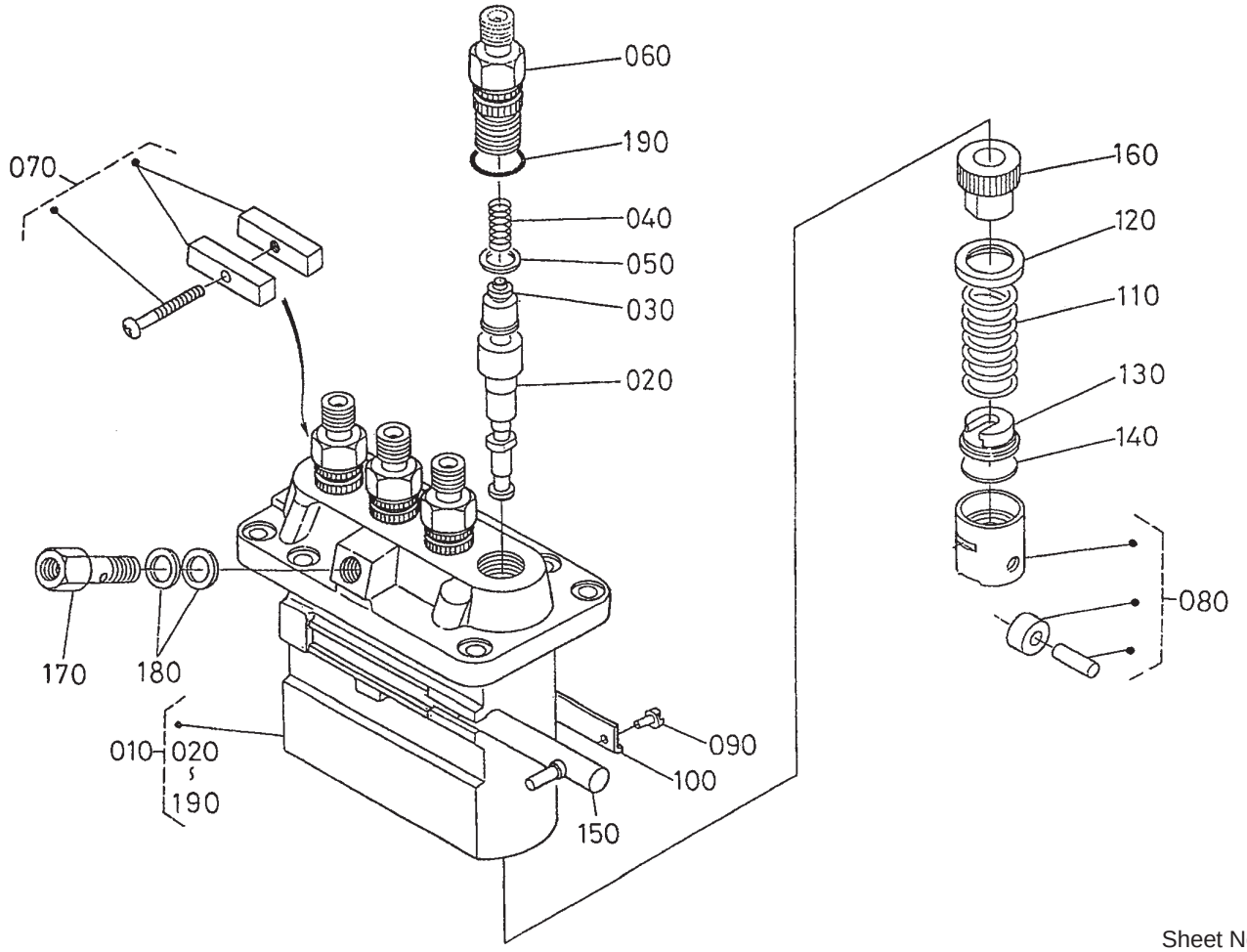

Sheet No.:56

Injection Pump Component Parts Assembly

Ref. No.	Part No.	Qty.	Description
010	100–9201	1	Injection Pump ASM
020	98–7619	4	Plunger–Pump
030	98–7620	4	Valve–Delivery
040	98–7621	4	Spring–Valve, Delivery
050	98–7622	4	Gasket–Valve, Delivery
060	98–7623	4	Holder–Valve, Delivery
070	98–7624	2	Lock Plate ASM
080	98–7625	4	Tappet ASM
090	98–7626	4	Pin–Guide, Tappet
100	98–7627	2	Plate
110	98–7628	4	Spring–Plunger
120	98–7629	4	Seat–Spring, Upper
130	98–7630	4	Seat–Spring, Lower
140	98–7631	4	Shim
150	98–7632	1	Rack–Control
160	98–7634	4	Sleeve–Control
170	98–7635	1	Screw
180	98–7636	2	Gasket
190	98–7637	4	O–Ring

Ref. No.	Part No.	Qty.	Description

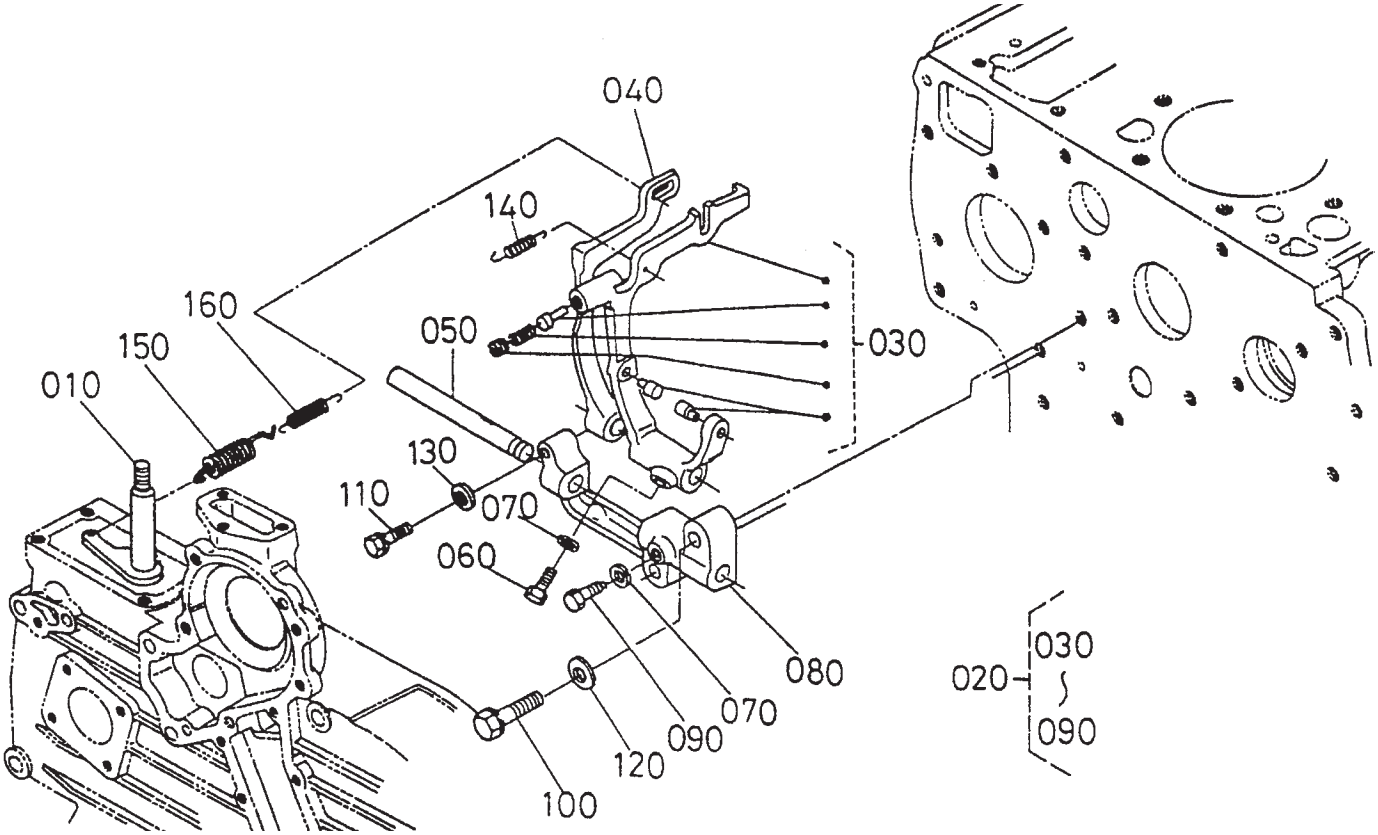

Sheet No.:57

Governor Assembly

Ref. No.	Part No.	Qty.	Description
010	98–7638	1	Lever–Governor
020	100–9204	1	Lever–Fork
030	100–9205	1	Lever–Fork
040	100–9206	1	Lever–Fork
050	98–7640	1	Shaft–Lever, Fork
060	98–7641	1	Bolt–Shaft, Lever
070	98–7699	2	Washer–Spring
080	98–7643	1	Holder–Lever, Fork
090	98–7644	1	Bolt
100	98–7645	2	Bolt
110	98–7646	1	Bolt
120	98–7536	2	Washer–Plain
130	98–7648	1	Washer–Plain
140	100–9207	1	Spring–Start
150	100–9208	1	Spring–Governor
160	98–7651	1	Spring–Governor

Ref. No.	Part No.	Qty.	Description

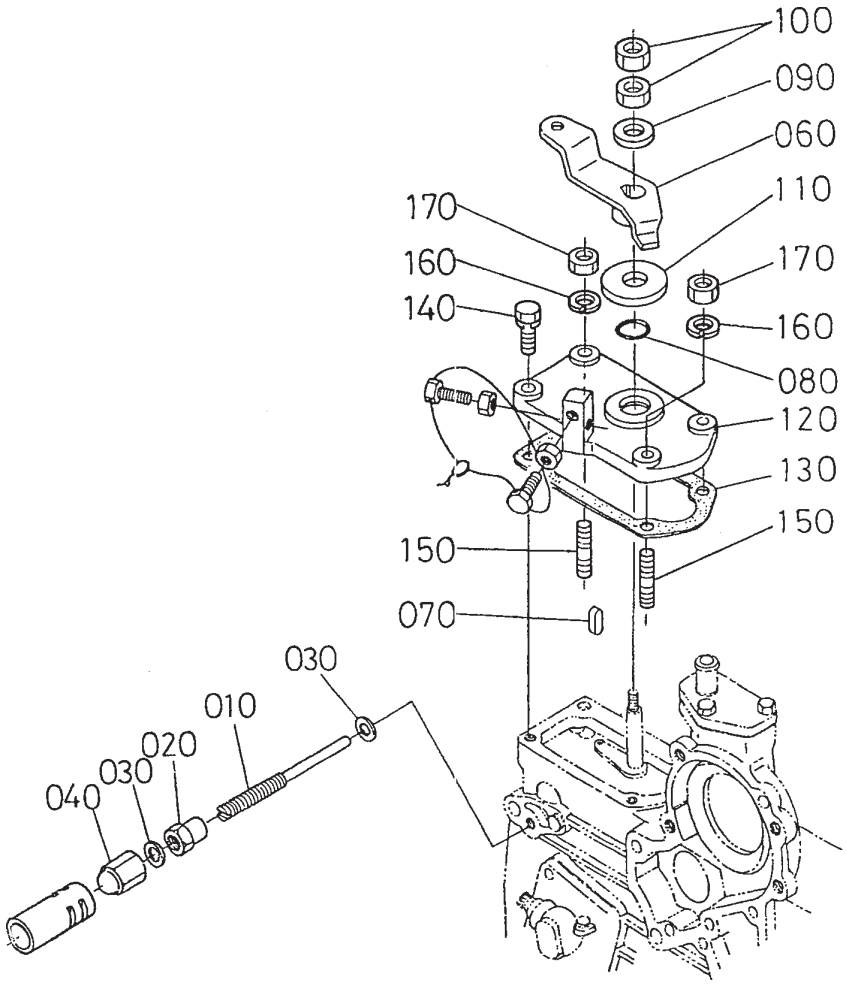

Sheet No.:58

Speed Control Plate Assembly

Ref. No.	Part No.	Qty.	Description
010	98–7652	1	Bolt–Adjusting
020	98–7653	1	Nut
030	98–7654	2	Gasket
040	98–7655	1	Nut–Cap
060	98–7657	1	Lever–Control, Speed
070	98–7658	1	Key–Feather
080	98–7659	1	O–Ring
090	98–7698	1	Washer–Plain
100	98–7661	2	Nut
110	98–7662	1	Collar
120	98–7663	1	Plate–Control, Speed
130	98–7664	1	Gasket
140	98–7568	2	Bolt
150	98–7571	2	Stud
160	98–7699	2	Washer–Spring
170	98–7572	4	Nut

Ref. No.	Part No.	Qty.	Description

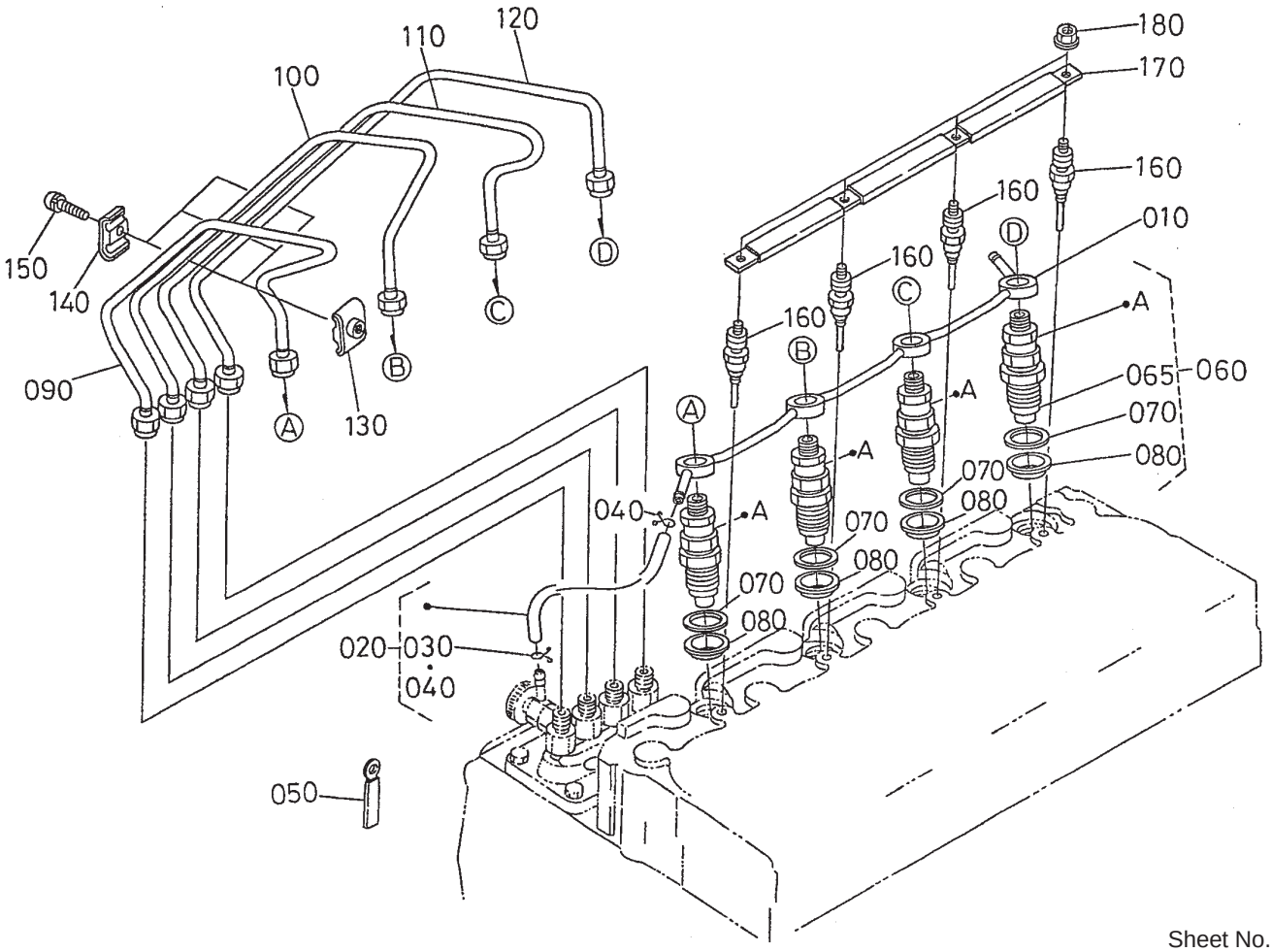

Sheet No.:59

Nozzle Holder and Glow Plug Assembly

Ref. No.	Part No.	Qty.	Description
010	100–9213	1	Overflow Pipe ASM
020	98–7670	1	Overflow Pipe ASM
030	98–7671	1	Clip–Pipe
040	98–7672	1	Clip–Pipe
050	98–7673	1	Clamp–Cord
060	100–9214	1	Kit–Holder, Nozzle
065	100–9215	4	Piece–Nozzle
070	98–7676	4	Gasket
080	98–7677	4	Seal
090	100–9216	1	Pipe–Injection
100	100–9217	1	Pipe–Injection
110	100–9218	1	Pipe–Injection
120	100–9219	1	Pipe–Injection
130	98–7682	3	Clamp–Pipe
140	98–7683	3	Clamp–Pipe
150	98–9364	3	Screw W/Washer
160	98–7685	4	Plug–Glow
170	98–7686	1	Cord–Plug, Glow
180	99–8377	4	Nut–Flange

Ref. No.	Part No.	Qty.	Description

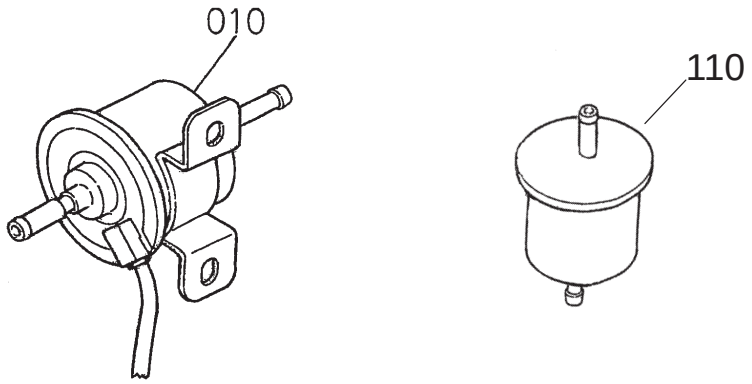

Sheet No.:60

Fuel Filter and Fuel Pump

Ref. No.	Part No.	Qty.	Description
010	104–5215	1	Pump–Fuel, Electric
110	98–7612	1	Filter–Fuel

Ref. No.	Part No.	Qty.	Description

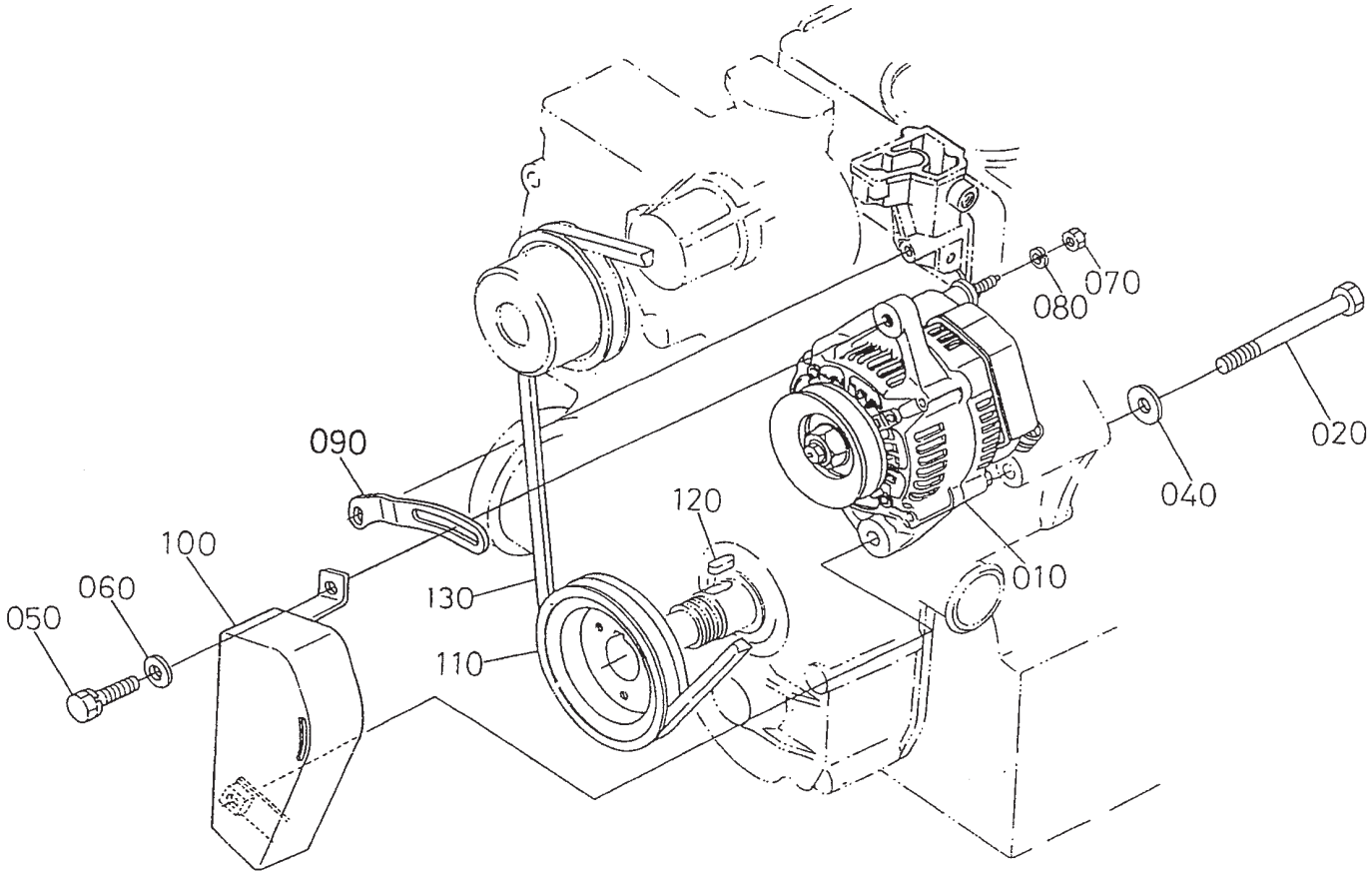

Sheet No.:61

Alternator and Pulley Assembly

Ref. No.	Part No.	Qty.	Description
010	98–7693	1	Alternator ASM
020	98–7695	1	Bolt
040	98–9366	1	Washer–Plain
050	98–7697	1	Bolt
060	100–9233	1	Washer–Plain
070	98–7572	1	Nut
080	98–7699	1	Washer–Spring
090	105–2872	1	Bracket–Alternator
100	98–7701	1	Cover–Belt
110	106–2044	1	Pulley–Drive, Fan
120	98–7451	1	Key – Feather
130	98–7705	1	V–Belt

Ref. No.	Part No.	Qty.	Description

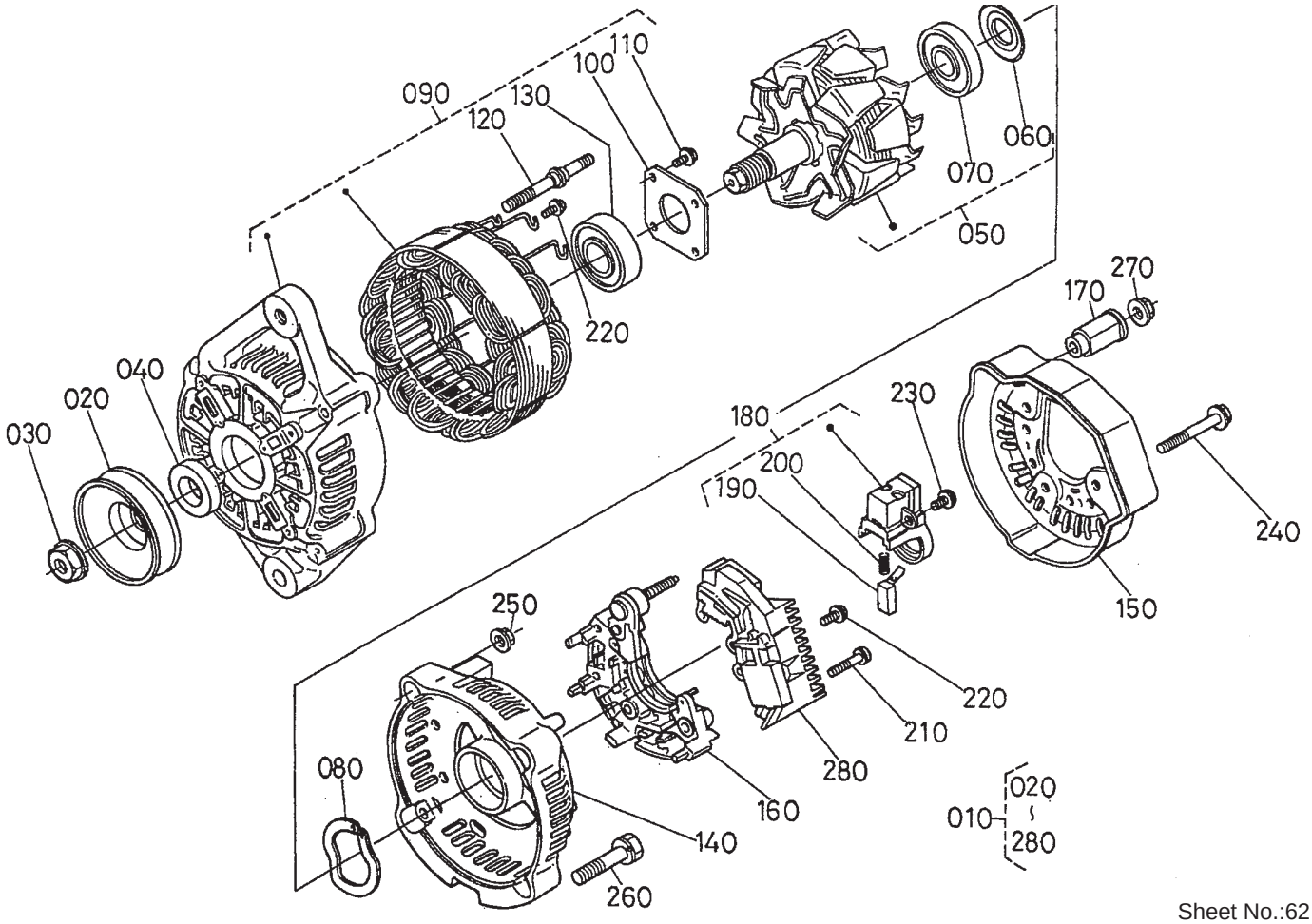

Sheet No.:62

Alternator Component Parts Assembly

Ref. No.	Part No.	Qty.	Description
010	98–7693	1	Alternator ASM
020	98–7707	1	Pulley–Alternator
030	98–7708	1	Nut
040	98–7709	1	Collar
050	98–7710	1	Rotor
060	98–7711	1	Cover–Bearing
070	98–7712	1	Bearing–Ball
080	98–7713	1	Washer–Thrust
090	98–7714	1	Frame–End, Drive
100	98–7715	1	Plate–Retainer
110	98–7716	4	Screw–Head, Round
120	98–7717	2	Bolt–Through
130	98–7718	1	Bearing–Ball
140	98–7719	1	Frame–End
150	98–7720	1	Cover–End
160	98–7721	1	Rectifier ASM
170	98–7722	1	Bushing–Insulation
180	98–7723	1	Holder–Brush
190	98–7724	2	Brush
200	98–7725	2	Spring–Brush
210	98–7726	2	Screw–Head, Round
220	98–7727	6	Screw–Head, Round
230	98–7728	1	Screw–Head, Round
240	98–7729	3	Bolt
250	98–7730	2	Nut
260	98–7731	2	Bolt

Ref. No.	Part No.	Qty.	Description
270	98–7732	1	Nut
280	98–7733	1	Regulator ASM

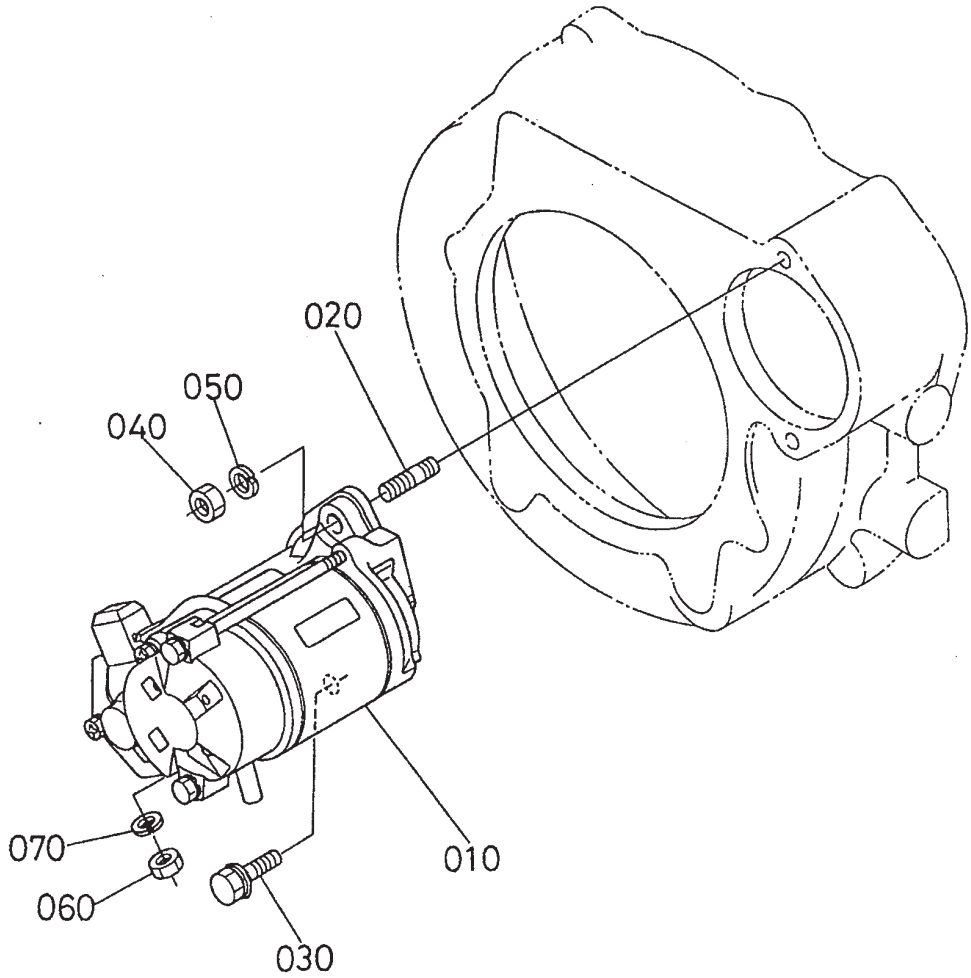

Sheet No.:63

Starter Assembly

Ref. No.	Part No.	Qty.	Description
010	100–9237	1	Starter ASM
020	98–7735	1	Stud
030	98–7736	1	Bolt
040	98–7737	1	Nut
050	98–9368	1	Washer–Spring
060	98–7739	1	Nut
070	99–8339	1	Washer–Spring

Ref. No.	Part No.	Qty.	Description

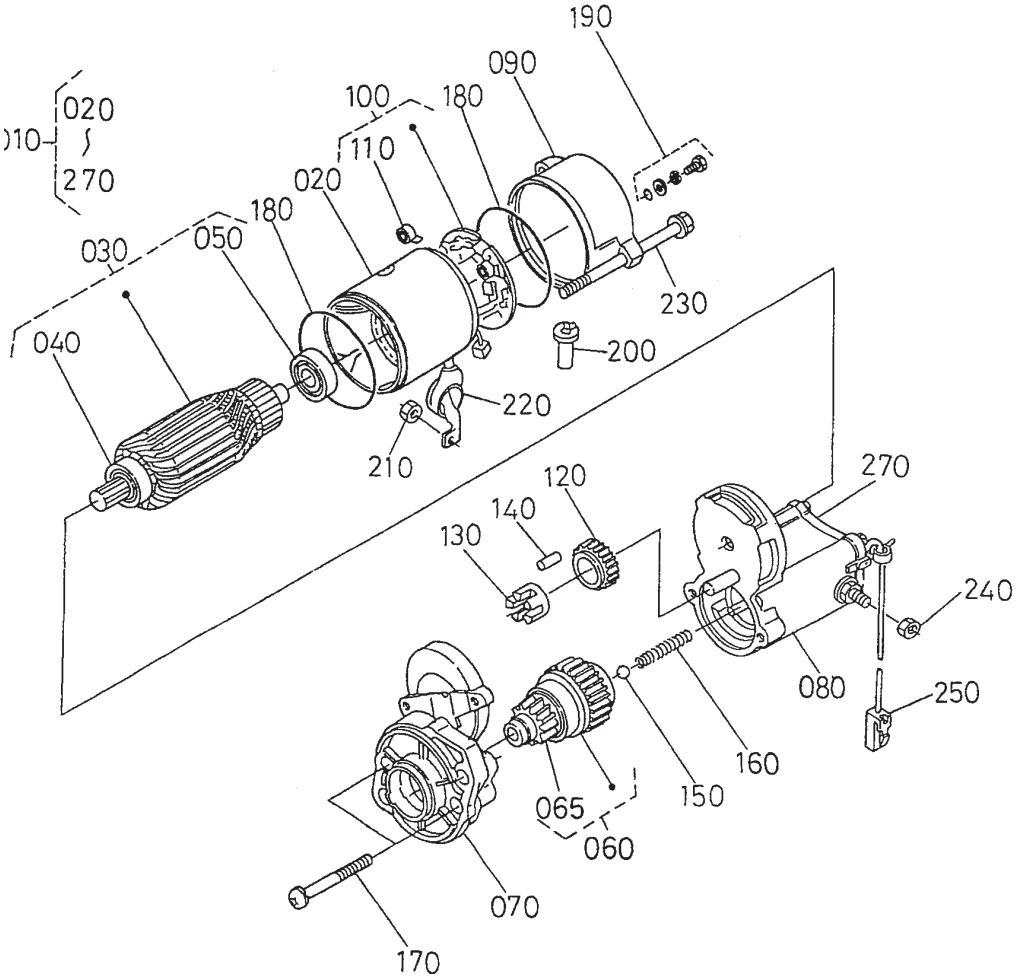

Sheet No.:64

Starter Component Parts Assembly

Ref. No.	Part No.	Qty.	Description
010	100–9237	1	Starter ASM
020	104–8608	1	Yoke ASM
030	98–7742	1	Armature ASM
040	98–7744	1	Bearing
050	98–7743	1	Bearing
060	98–7745	1	Clutch–Running, Over
065	105–2887	1	Pinion–Bevel
070	98–7746	1	Frame–End, Drive
080	100–9239	1	Magentic Switch ASM
090	98–7748	1	Frame–End
100	98–7749	1	Brush Holder ASM
110	98–7750	4	Spring–Brush
120	98–7751	1	Gear
130	98–7752	1	Retainer
140	98–7753	5	Roller
150	98–7755	1	Ball
160	98–7754	1	Spring
170	98–7756	2	Bolt
180	98–7757	2	O–Ring
190	98–7758	2	Bolt ASM
200	98–7759	1	Pipe–Drain
210	105–2873	1	Nut
220	99–8375	1	Cover
230	100–9240	2	Bolt
240	99–8376	1	Nut–Hex

Ref. No.	Part No.	Qty.	Description
250	98–9711	1	Cord–Solenoid, Stop
270	105–2886	1	Cover ASM

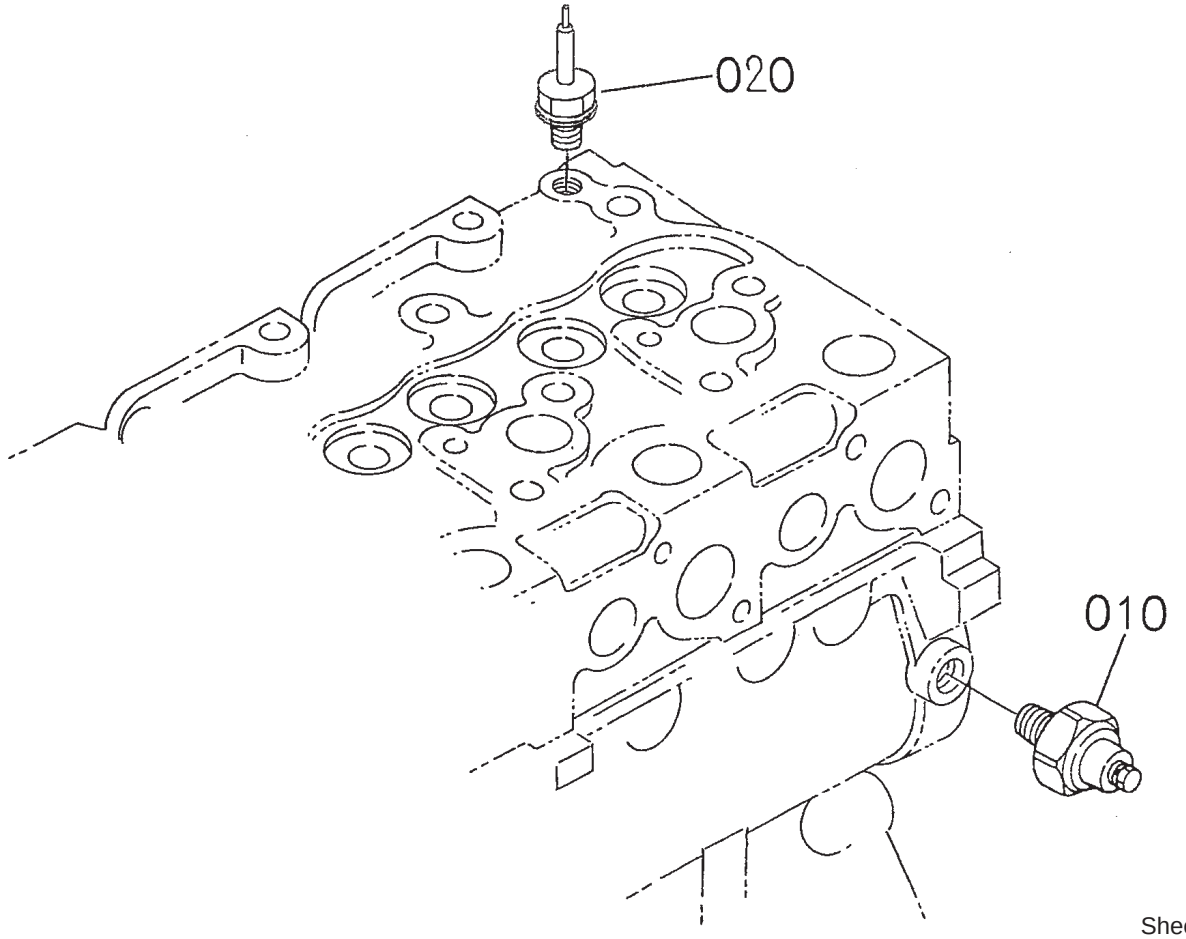

Sheet No.:65

Oil Switch / Thermometer and Plug Assembly

Ref. No.	Part No.	Qty.	Description
010	98–7764	1	Switch–Oil
020	99–3582	1	Thermoswitch

Ref. No.	Part No.	Qty.	Description

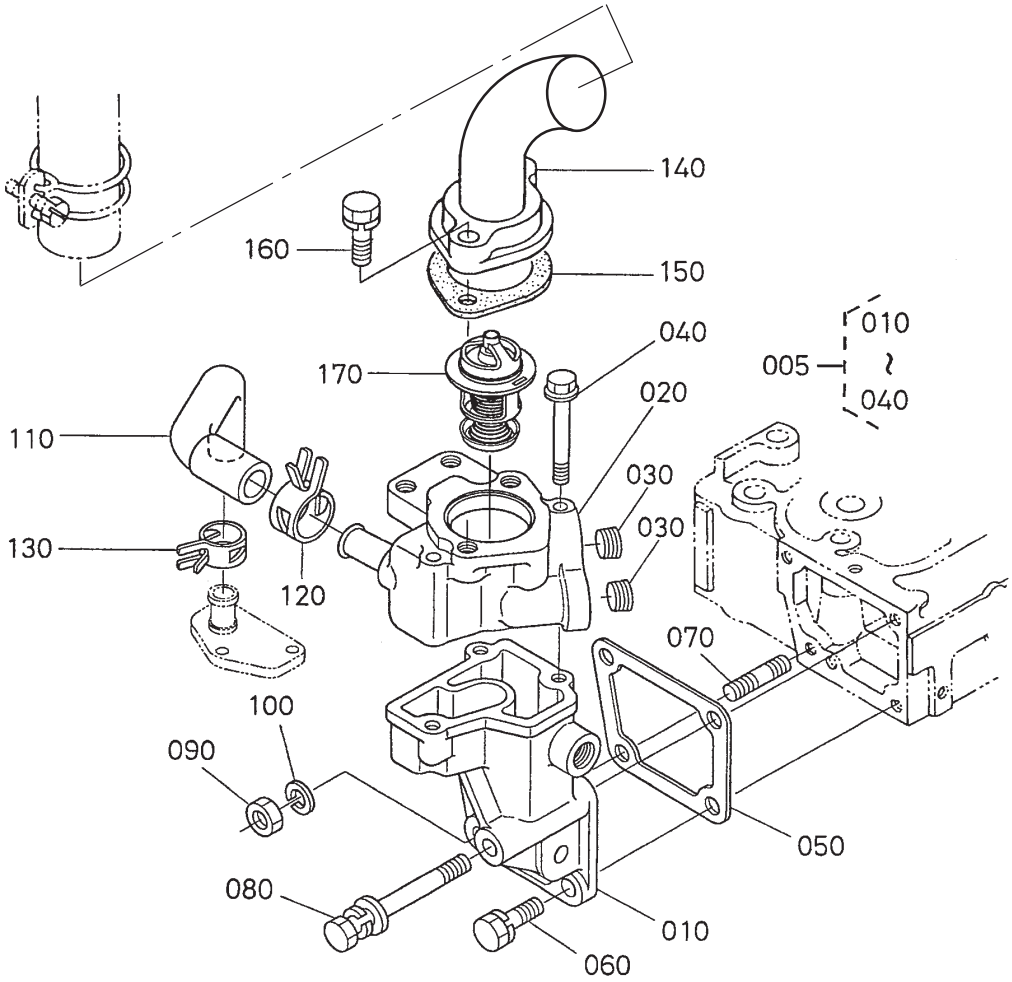

Sheet No.:66

Water Flange and Thermostat Assembly

Ref. No.	Part No.	Qty.	Description
005	105–4578	1	Water Flange ASM
030	105–2874	2	Plug
040	105–2875	3	Bolt–Flange
050	105–2876	1	Gasket–Flange, Water
060	98–7610	2	Bolt
070	100–1558	1	Stud–Manifold, Exhaust
080	105–2877	1	Bolt
090	98–7534	1	Nut
100	99–8339	1	Washer–Spring
110	105–2878	1	Pipe–Return, Water
120	98–9714	1	Clamp–Hose
130	105–2879	1	Clamp, Hose
140	100–9244	1	Cover–Thermostat
150	105–2880	1	Gasket–Cover, Thermostat
160	98–7777	2	Bolt
170	105–2881	1	Thermostat ASM

Ref. No.	Part No.	Qty.	Description

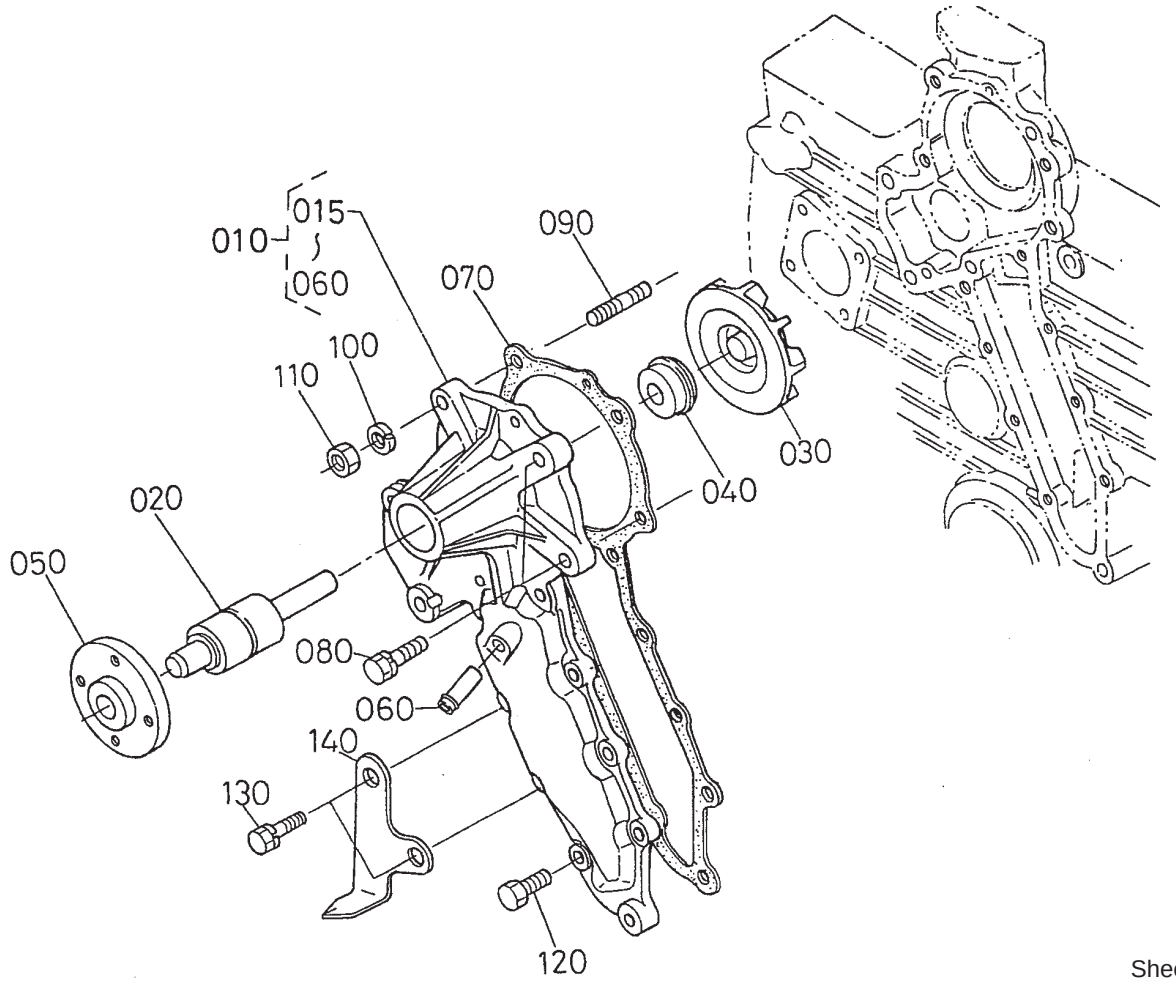

Sheet No.:68

Water Pump Assembly

Ref. No.	Part No.	Qty.	Description
010	100–9245	1	Water Pump ASM
020	98–7780	1	Bearing–Ball
030	98–7781	1	Impeller–Pump, Water
040	105–2882	1	Mechanical Seal ASM
050	98–7783	1	Flange–Pump, Water
060	98–9577	1	Pipe–Return, Water
070	98–7784	1	Gasket–Pump, Water
080	98–7439	2	Bolt
090	98–7786	2	Stud
100	99–8339	2	Washer–Spring
110	98–7534	2	Nut
120	98–7605	6	Bolt
130	98–7568	2	Bolt
140	100–9246	1	Indicator–Timing

Ref. No.	Part No.	Qty.	Description

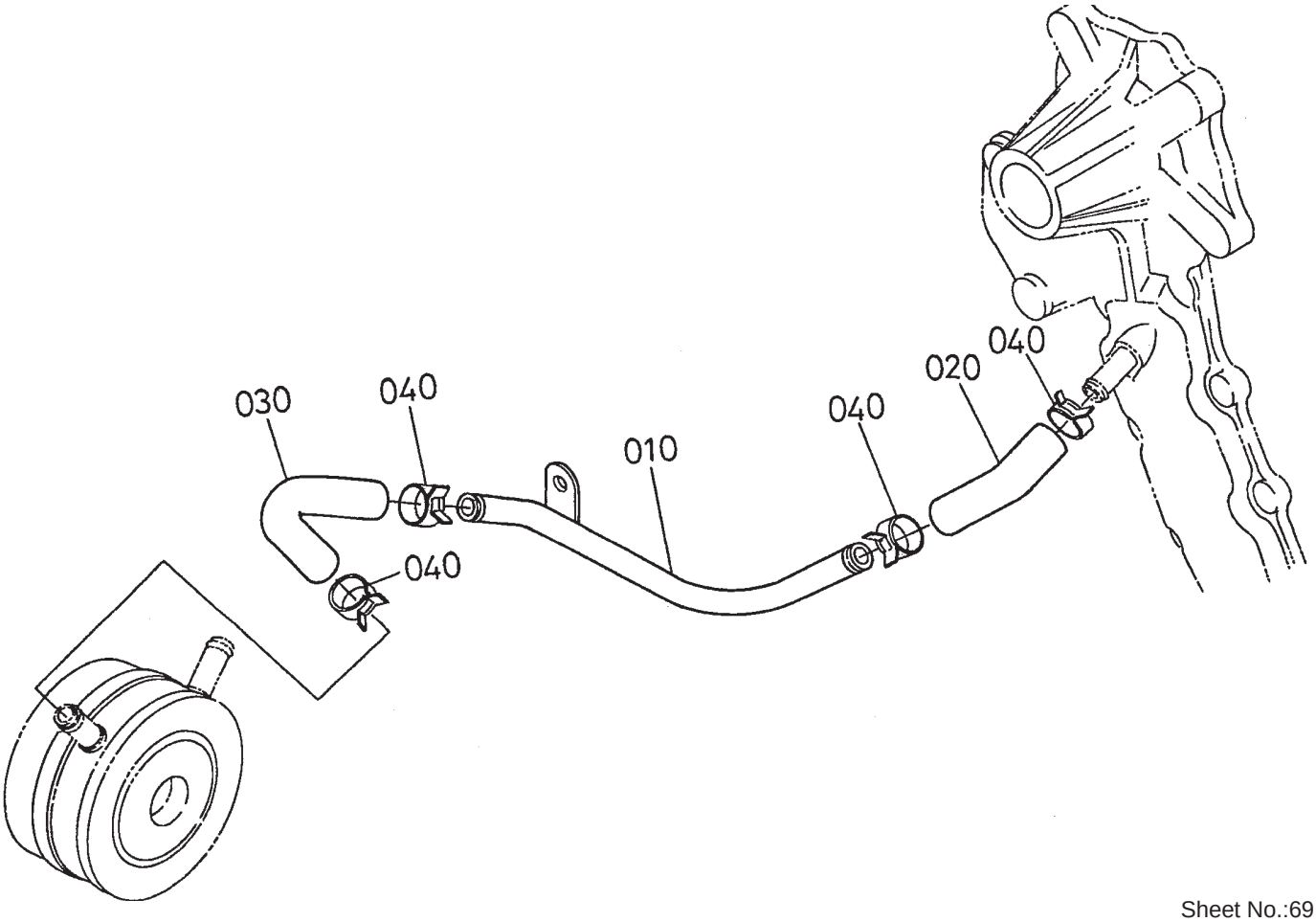

Sheet No.:69

Water Pipe Assembly

Ref. No.	Part No.	Qty.	Description
010	100–9278	1	Pipe–Water
020	100–9279	1	Pipe–Water
030	100–9280	1	Pipe–Cooler, Oil
040	98–9579	4	Band–Pipe

Ref. No.	Part No.	Qty.	Description

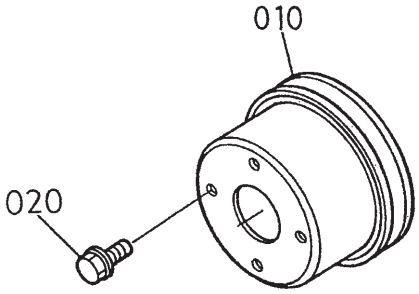

Sheet No.:70

Fan Assembly

Ref. No.	Part No.	Qty.	Description
010	98–7702	1	Pulley–Fan
020	99–8363	4	Bolt–Flange

Ref. No.	Part No.	Qty.	Description

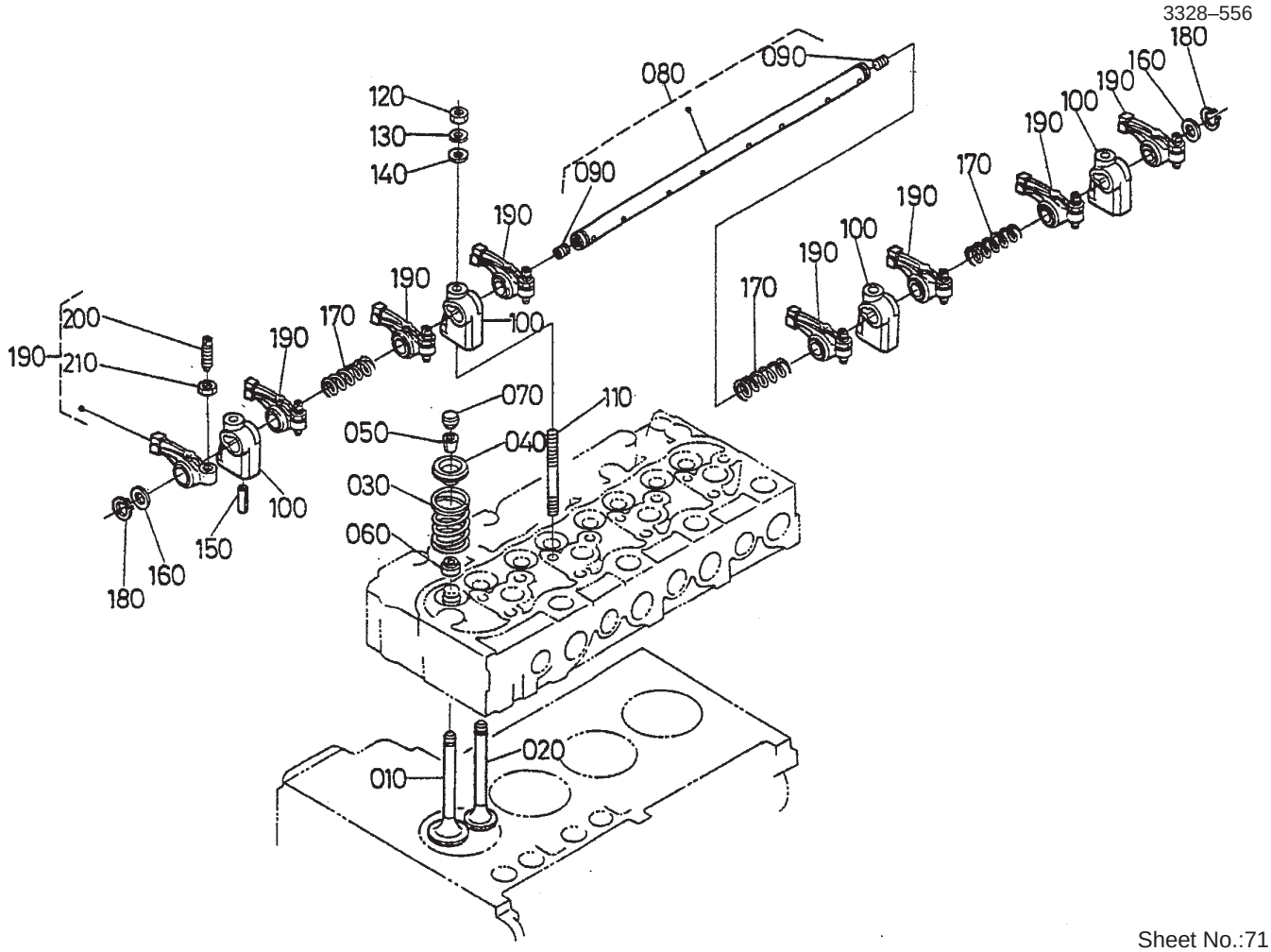

Sheet No.:71

Valve and Rocker Arm Assembly

Ref. No.	Part No.	Qty.	Description
010	98–7791	4	Valve–Inlet
020	100–9281	4	Valve–Exhaust
030	98–7793	8	Spring–Valve
040	98–7794	8	Retainer–Spring, Valve
050	98–7795	8	Collet–Spring, Valve
060	98–7796	8	Seal–Stem, Valve
070	98–7797	8	Cap–Valve
080	98–7798	1	Rocker Arm Shaft ASM
090	98–7799	2	Screw–Set
100	98–7800	4	Bracket–Arm, Rocker
110	98–7801	4	Stud
120	98–7534	4	Nut
130	99–8339	4	Washer–Spring
140	98–7535	4	Washer–Spring
150	98–7805	1	Pin–Spring
160	98–7806	2	Washer
170	98–7807	3	Spring–Arm, Rocker
180	98–7808	2	Clip–Cir., External
190	98–7809	8	Rocker Arm ASM
200	98–7810	8	Screw–Adjusting
210	98–7811	8	Nut

Ref. No.	Part No.	Qty.	Description

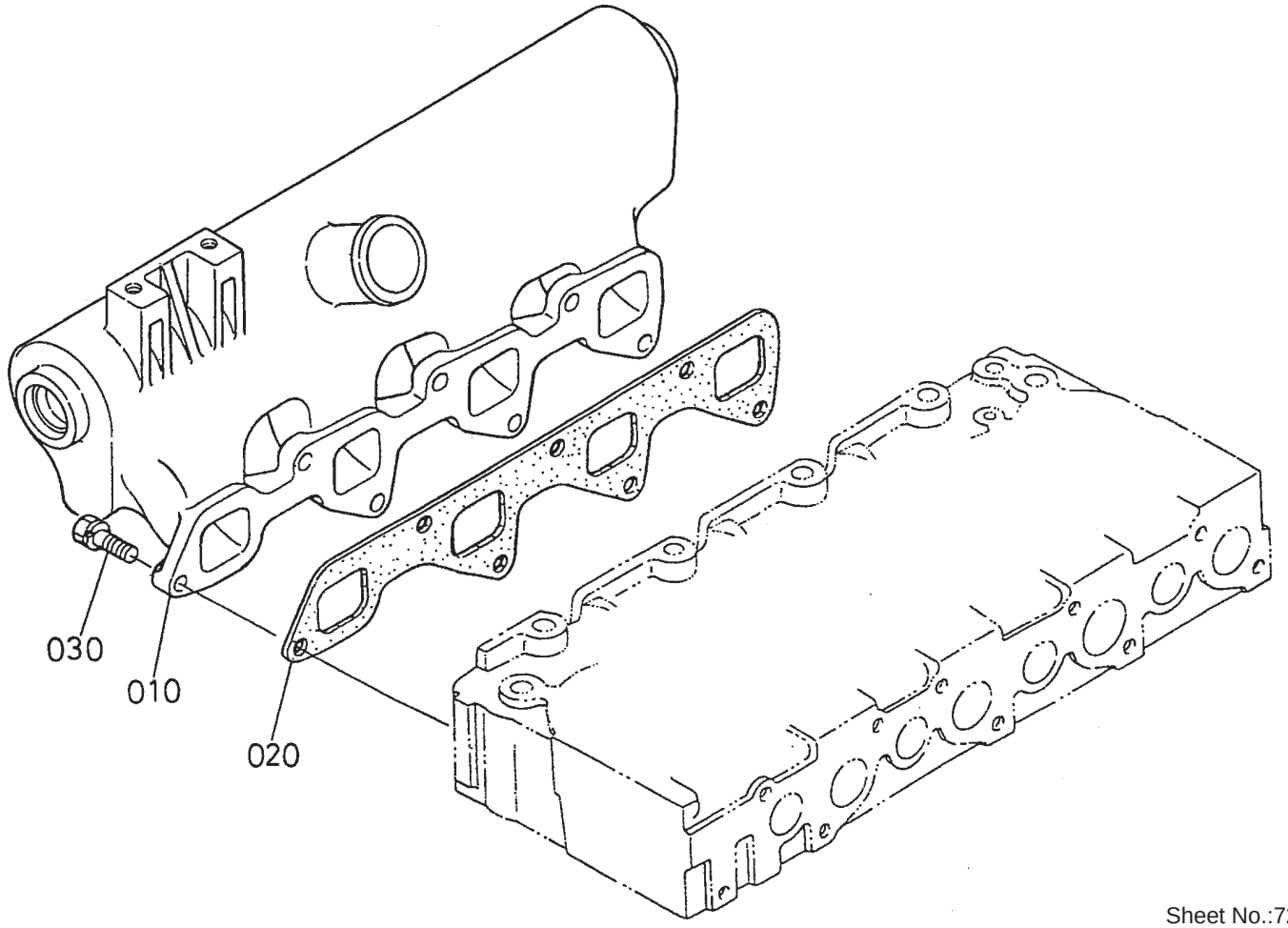

Sheet No.:72

Inlet Manifold Assembly

Ref. No.	Part No.	Qty.	Description
010	100–9283	1	Inlet–Manifold
020	100–9284	1	Gasket, In–Manifold
030	98–7610	7	Bolt

Ref. No.	Part No.	Qty.	Description

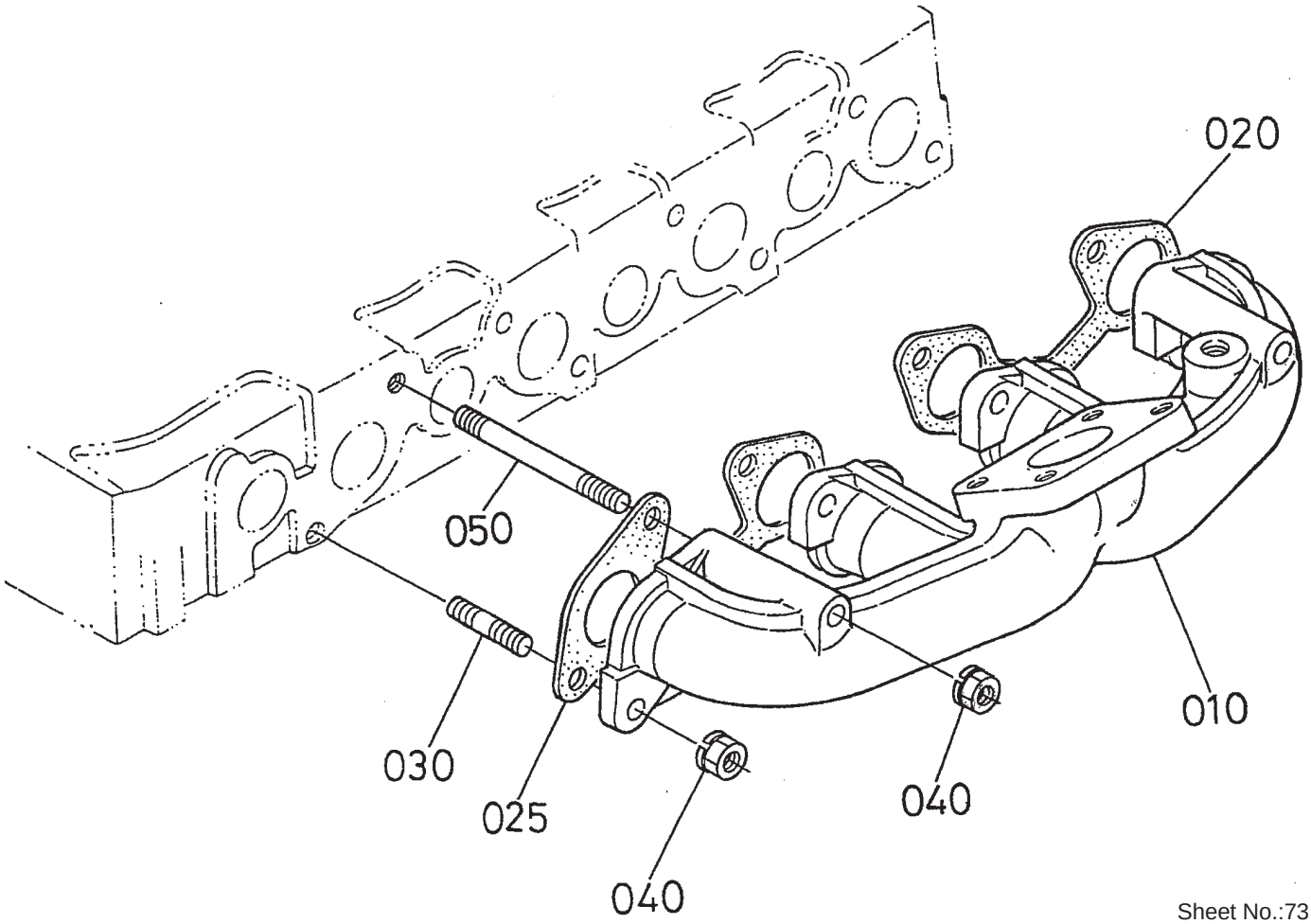

Sheet No.:73

Exhaust Manifold Assembly

Ref. No.	Part No.	Qty.	Description
010	100–9285	1	Manifold–Exhaust
020	98–7802	1	Gasket
025	98–7803	1	Gasket
030	98–7533	6	Stud
040	100–9288	8	Nut
050	100–9289	2	Stud

Ref. No.	Part No.	Qty.	Description

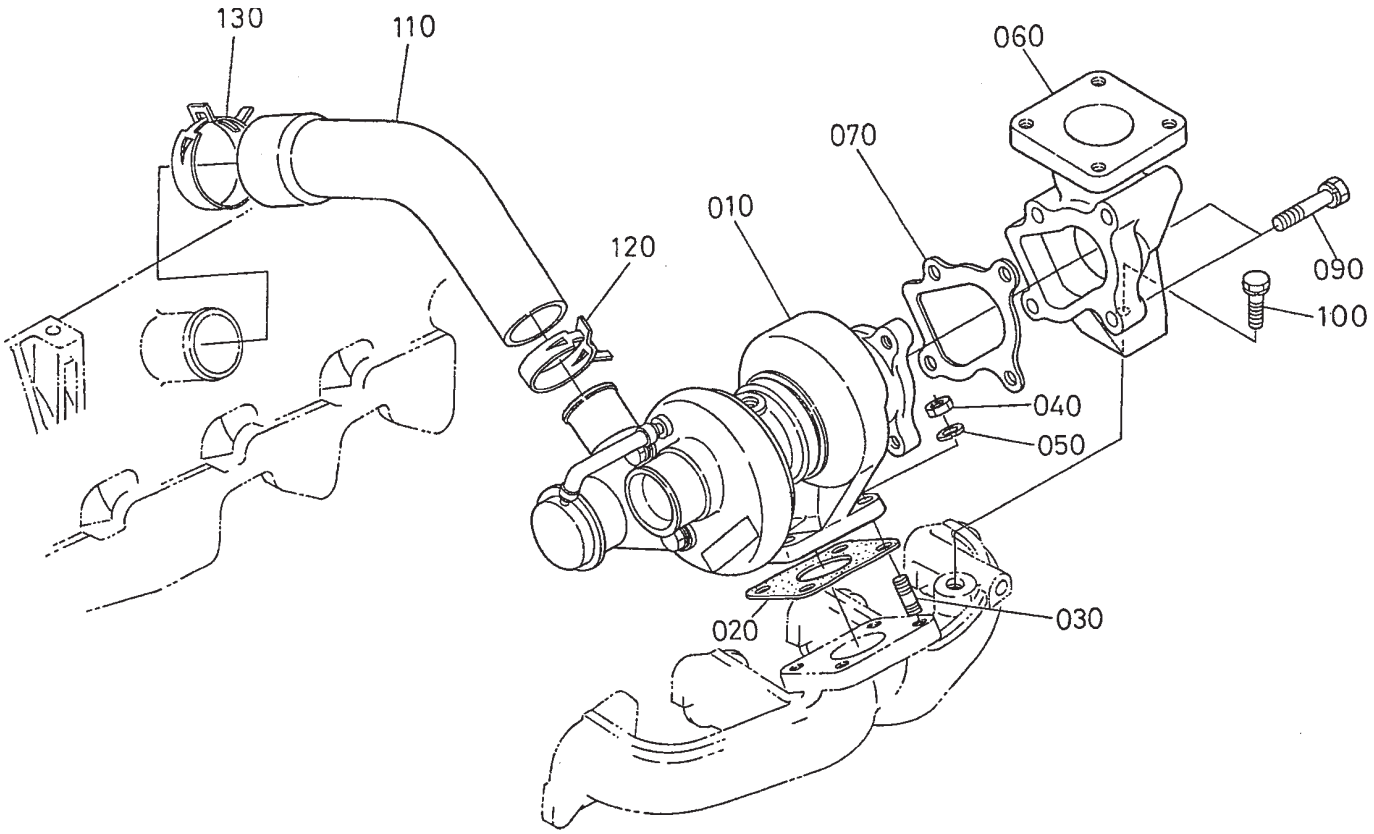

Sheet No.:74

Turbo Charger Assembly

Ref. No.	Part No.	Qty.	Description
010	100–9313	1	Turbo Changer ASM
020	100–9314	1	Gasket
030	99–8341	4	Stud
040	98–7534	4	Nut
050	99–8339	4	Washer–Spring
060	100–9315	1	Flange–Muffler
070	100–9316	1	Gasket
090	98–7697	4	Bolt
100	100–9230	1	Bolt
110	100–9318	1	Hose–Inlet
120	100–9319	1	Band–Pipe
130	99–8322	1	Band–Pipe

Ref. No.	Part No.	Qty.	Description

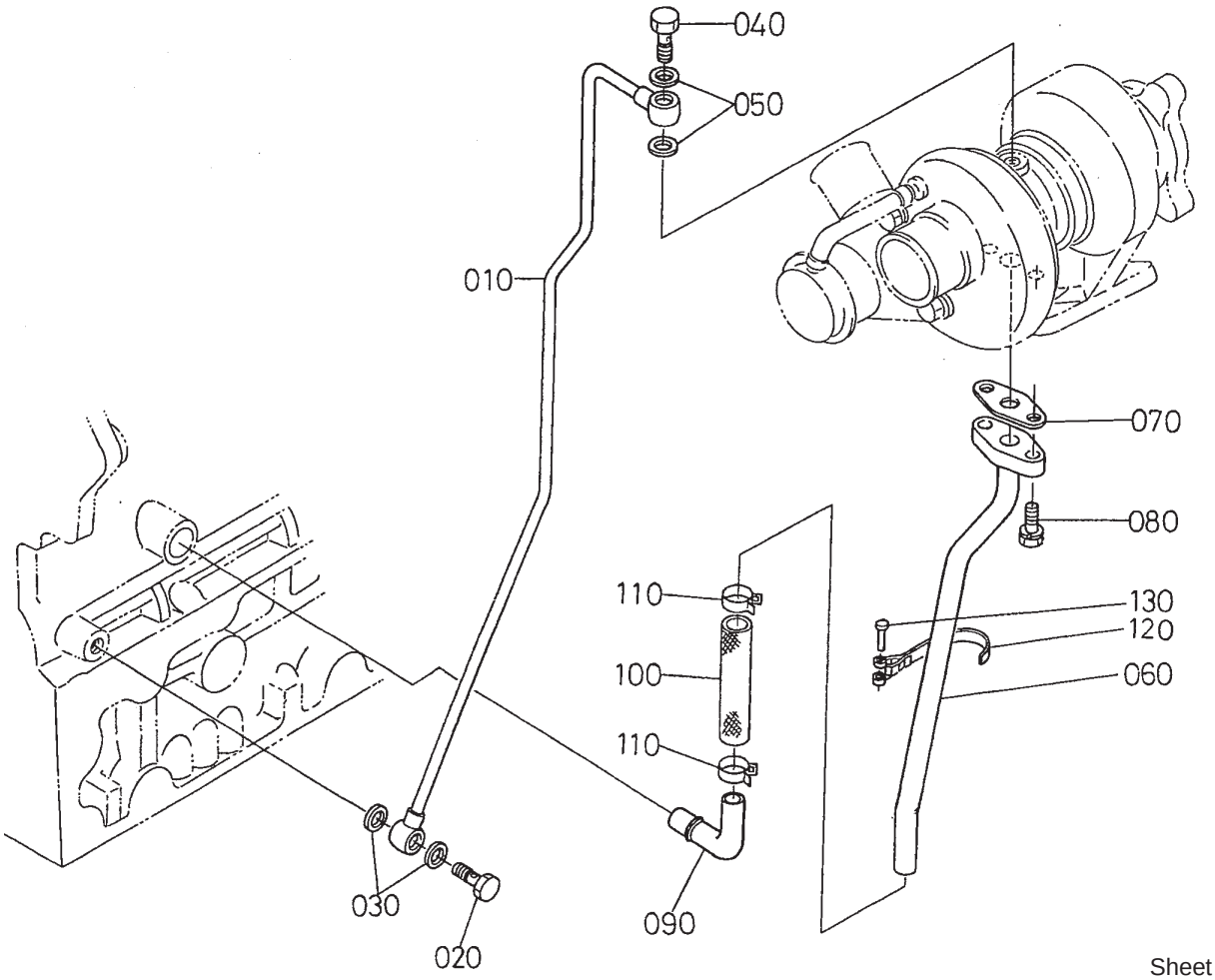

Sheet No.:75

Oil Pipe (Turbo Charger) Assembly

Ref. No.	Part No.	Qty.	Description
010	100–9320	1	Pipe–Oil
020	100–9321	1	Bolt–Joint, Eye
030	98–7428	2	Gasket
040	98–9418	1	Bolt–Joint, Eye
050	99–8346	2	Gasket
060	100–9322	1	Pipe–Oil
070	98–9435	1	Gasket–Oil Return, Turbo
080	98–7568	2	Bolt
090	100–9323	1	Pipe–Oil
100	98–9721	1	Pipe–Oil
110	98–9714	2	Clamp–Hose
120	100–9324	1	Clamp–Pipe
130	98–9591	1	Pin – Band

Ref. No.	Part No.	Qty.	Description

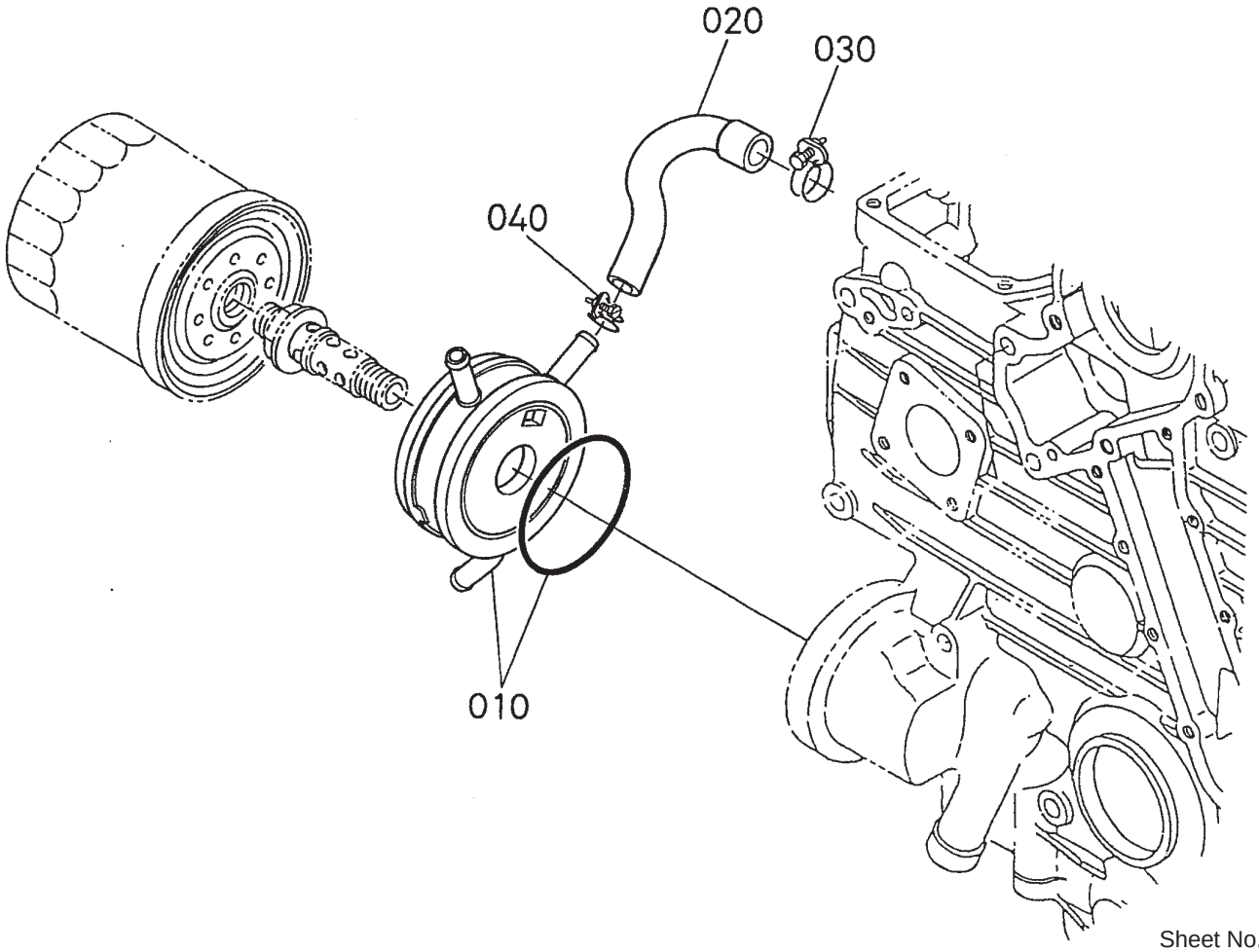

Sheet No.:76

Oil Cooler Assembly

Ref. No.	Part No.	Qty.	Description
010	100–9325	1	Oil Cooler ASM
020	100–9326	1	Hose–Cooler, Oil
030	98–7774	1	Band–Pipe
040	100–9327	1	Band–Pipe

Ref. No.	Part No.	Qty.	Description

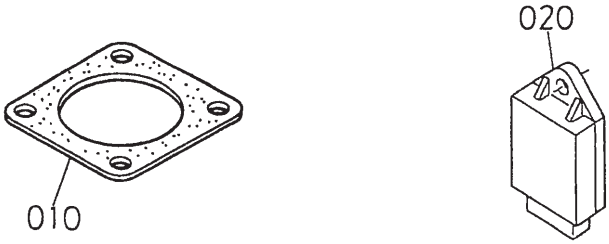

Sheet No.:77

Muffler Gasket and Glow Controller

Ref. No.	Part No.	Qty.	Description
010	100–9333	1	Gasket–Muffler
020	98–7611	1	Controller–Glow

Ref. No.	Part No.	Qty.	Description

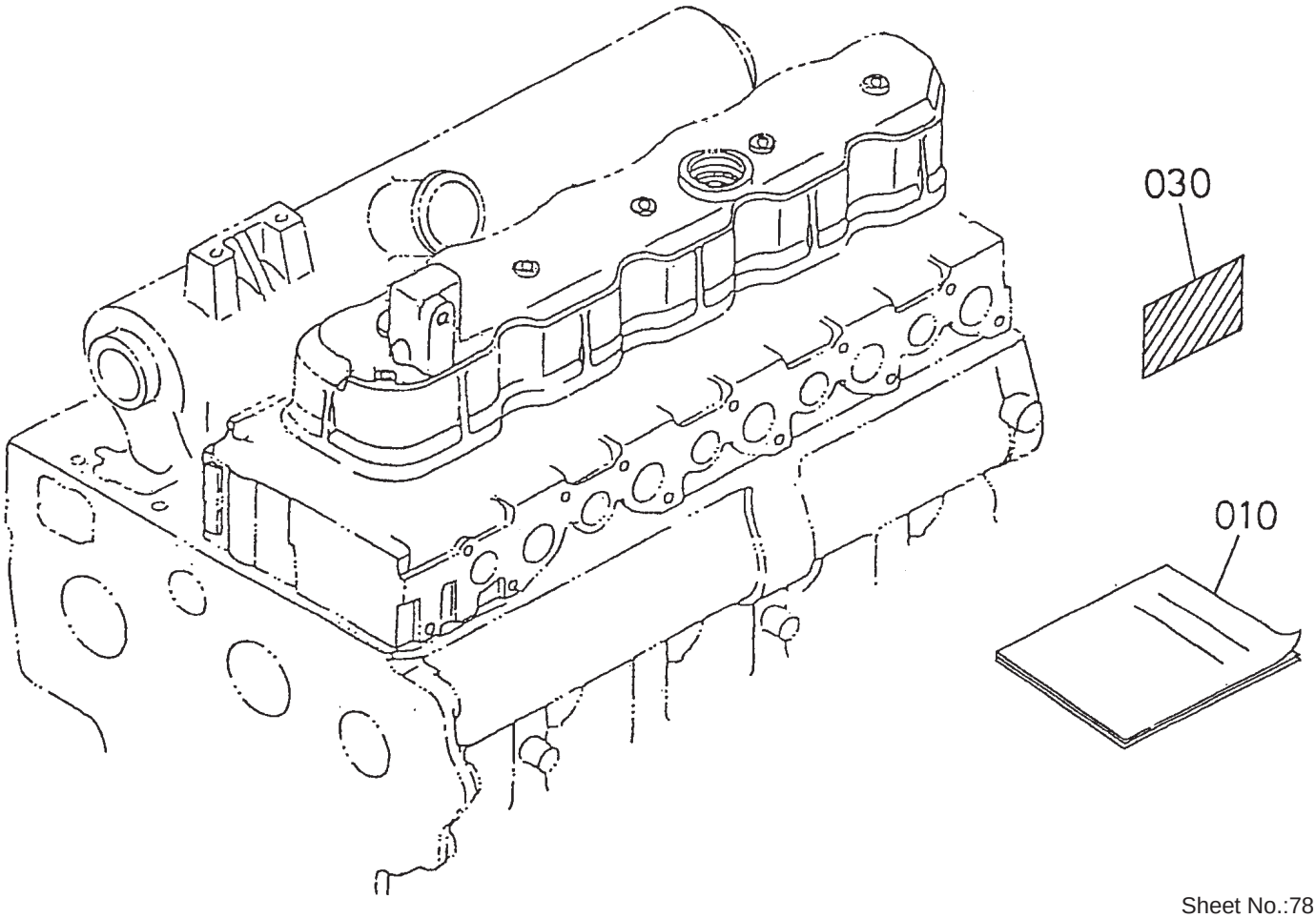

Sheet No.:78

Label and Operators Manual

Ref. No.	Part No.	Qty.	Description
010	100–9335	1	Manual–Instruction

Ref. No.	Part No.	Qty.	Description

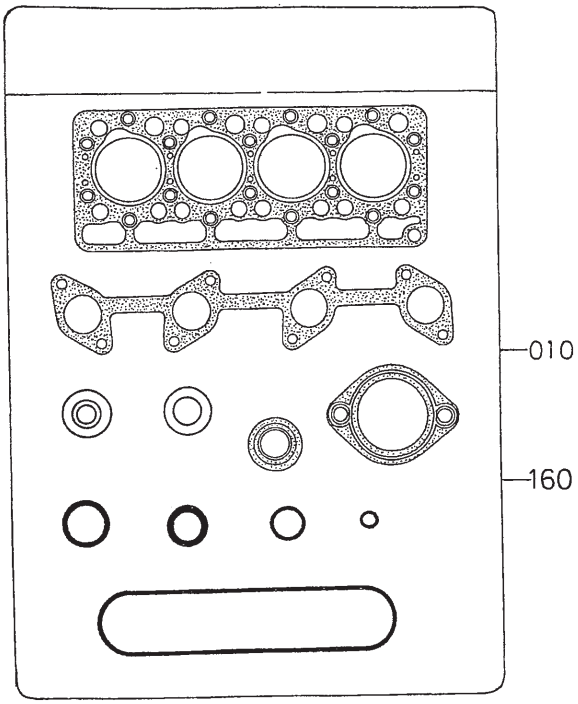

Sheet No.:79

Gasket Kit

Ref. No.	Part No.	Qty.	Description
010	100–9337	1	Kit–Gasket, Upper
160	98–7888	1	Kit–Gasket, Lower

Ref. No.	Part No.	Qty.	Description

Maintenance Record

Date								

Maintenance Record

Date								

TORO®