Form No. 3359-251 Rev D

TORO®

Count on it.

Parts Catalog

# 323

## Compact Utility Loader

**Model No. 22318—Serial No. 280000001 and Up**

Register at www.Toro.com.
Original Instructions (EN)

*3359-251* D

# Ordering Replacement Parts

To order replacement parts, please supply the part number, the quantity, and the description of each part desired.

### Understanding Reference Numbers

Each identified part in an illustration has a reference number. The reference number for a part also appears in the parts list, along with other information about the part.

This catalog uses two special reference number formats, one to indicate parts in a service assembly and another to indicate the quantity of a given part in an illustration.

### Service Assembly Reference Numbers

Parts in service assemblies have reference numbers in the form a:b. The a represents the reference number of the entire service assembly and the b represents a sequential number unique to each part within the service assembly.

For example, a wheel assembly might be identified by reference number 6, the tire by 6:1, the valve by 6:2, and the wheel by 6:3. When you order the assembly identified by reference number 6, you receive all parts identified by reference numbers 6:1,6:2, and 6:3. However, you may also order any part individually. Reference numbers of this type appear in illustration and in parts lists.

### Reference Numbers Indicating Quantity

In an illustration, if a reference number indicates more than one part, the reference number has the form nX y. The n represents the quantity of the part, the X is the multiplication symbol, and the y represents the reference number.

For example, in an illustration, the reference number 2X 37 means that two of the parts identified by reference number 37 are indicated.

# Contents

Frame and Loader Arm Assembly . . . 4
Hood and Screen Assembly . . . 5
Wheel and Motor Assembly . . . 6
Hydraulic Motor Assembly No. 99-3052 . . . 7
Engine and Pump Assembly . . . 8
Hydraulic Motor Assembly No. 108-4710 . . . 10
Fuel Tank and Air Filter Assembly . . . 11
Air Cleaner Assembly No. 99-3160 . . . 12
Hydraulic Tank and Filter Assembly . . . 13
Auxiliary Control Lever Assembly . . . 14
Hydraulic Valve Assembly . . . 15
Auxiliary Hydraulic Valve Assembly No. 99-3077 . . . 16
Hydraulic Selector Valve Assembly No. 99-3072 . . . 17
Four Spool Valve Assembly . . . 18
Four Spool Hydraulic Valve Assembly No. 105-8377 . . . 19
Hydraulic Motor Assembly . . . 20
Counterbalance Valve Assembly No. 99-3040 . . . 21
Hydraulic Cylinder Assembly . . . 22
Hydraulic Cylinder Assembly No. 105-7867 . . . 23
Electrical Component Assembly . . . 24
Thigh Support Assembly . . . 25
Crankshaft Assembly Kohler CH680-3015 . . . 26
Crankcase Assembly Kohler CH680-3015 . . . 27
Oil Pan and Lubrication Assembly Kohler CH680-3015 . . . 28
Head and Valve and Breather Assembly Kohler CH680-3015 . . . 29
Ignition and Electrical Assembly Kohler CH680-3015 . . . 31
Blower Housing Assembly Kohler CH680-3015 . . . 33
Starter Assembly Kohler CH680-3015 . . . 34
Fuel System Assembly Kohler CH680-3015 . . . 35
Engine Control Assembly Kohler CH680-3015 . . . 36
Air Intake and Filtration Assembly Kohler CH680-3015 . . . 37
Exhaust Assembly Kohler CH680-3015 . . . 38
Attachments and Accessories . . . 39

**© 2023—The Toro® Company**
**8111 Lyndale Avenue South**
**Bloomington, MN 55420**



**Contact us at www.Toro.com.**
**Printed in the USA.**
**All Rights Reserved**

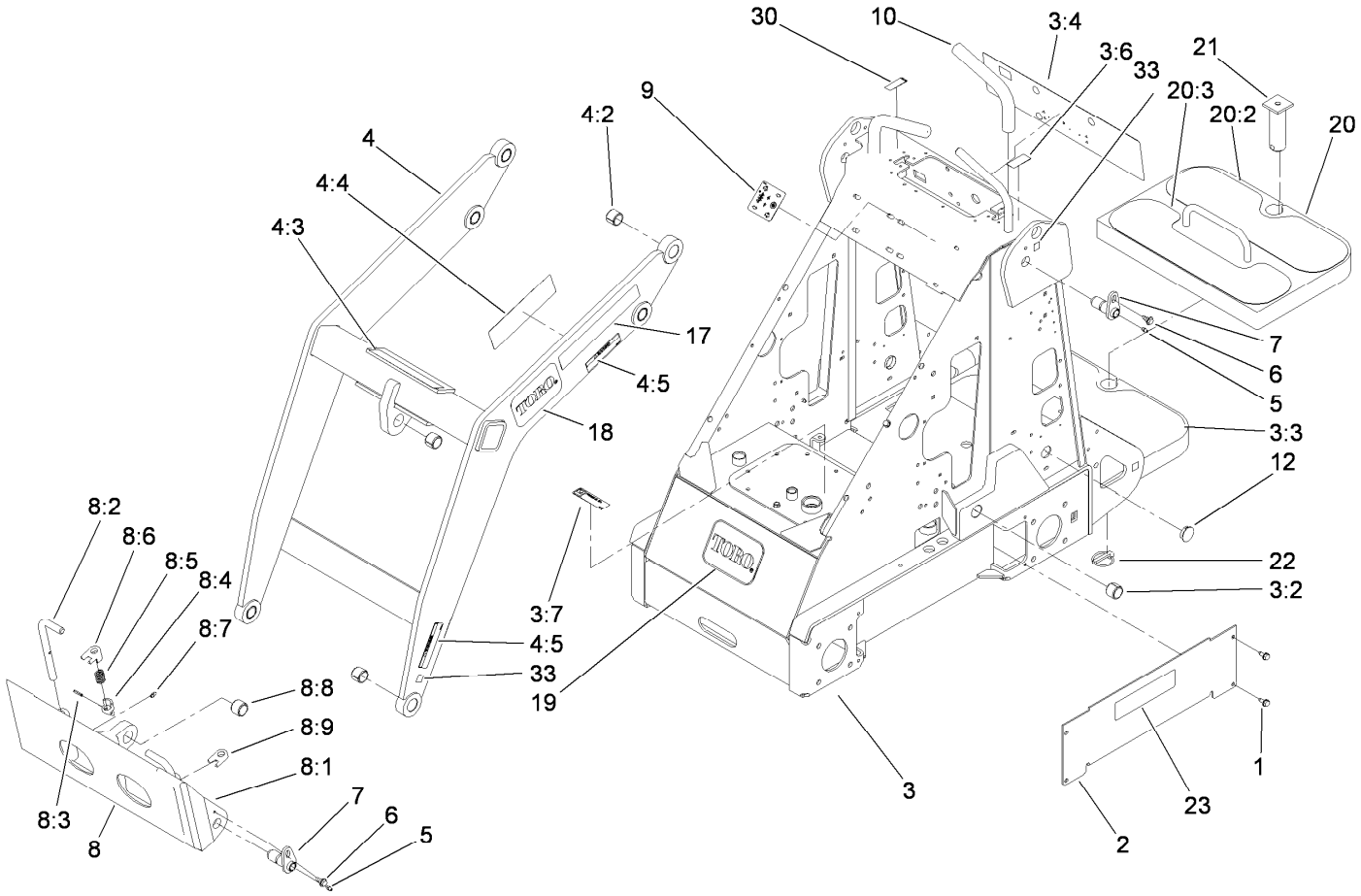


# Frame and Loader Arm Assembly

| Ref. | Part Number | Qty. | Description |
|---|---|---|---|
| 1 | 32144-70 | 8 | Screw-HWHTF |
| 2 | 106-8178-01 | 2 | Cover-Hose |
| 3 | 108-9710 | 1 | Frame ASM |
| 3:2 | 98-4871 | 2 | Bushing-Tension |
| 3:3 | 98-9947 | 2 | Tread-Foot |
| 3:4 | 108-9732 | 1 | Decal-Panel, Control |
| 3:6 | 98-8219 | 1 | Decal-Throttle |
| 3:7 | 105-8432 | 1 | Decal-Oil, HYD |
| 4 | 106-8155 | 1 | Loader ASM |
| 4:2 | 98-4871 | 7 | Bushing-Tension |
| 4:3 | 98-4682 | 1 | Decal-Caution |
| 4:4 | 98-9051 | 1 | Decal-Danger |
| 4:5 | 100-6141 | 4 | Decal-Pinch |
| 5 | 302-5 | 4 | Fitting-Grease |
| 6 | 99-5105 | 4 | Screw-Shoulder |
| 7 | 112-2609 | 4 | Pin-Pivot |
| 8 | 105-8364 | 1 | Quick Attach ASM |
| 8:1 | 105-0245-03 | 1 | Mount-Attach, Quick |
| 8:2 | 105-8367 | 2 | Pin-Locking |
| 8:3 | 3285-1 | 2 | Pin-Grooved |

| Ref. | Part Number | Qty. | Description |
|---|---|---|---|
| 8:4 | 105-0246 | 2 | Cam |
| 8:5 | 98-4694 | 2 | Spring-Compression |
| 8:6 | 104-5909 | 1 | Stop-RH |
| 8:7 | 302-5 | 2 | Fitting-Grease |
| 8:8 | 98-4871 | 1 | Bushing-Tension |
| 8:9 | 104-5903 | 1 | Stop-LH |
| 9 | 108-9716 | 1 | Decal-Selector, Speed |
| 10 | 98-4845 | 2 | Grip-Cushion |
| 12 | 94-1402 | 2 | Plug-Hole |
| 17 | 105-8427 | 2 | Decal |
| 18 | 93-7340 | 2 | Decal |
| 19 | 62-5550 | 1 | Decal |
| 20 | 112-4947 | 1 | Counterweight ASM |
| 20:2 | 98-9947 | 1 | Tread-Foot |
| 20:3 | 112-4948 | 1 | Tread |
| 21 | 99-8638 | 1 | Pin |
| 22 | 99-9978 | 1 | Pin-Lynch |
| 23 | 105-8429 | 2 | Decal |
| 30 | 94-2551 | 1 | Decal-Choke |
| 33 | 93-9084 | 6 | Decal-Point, Lift |

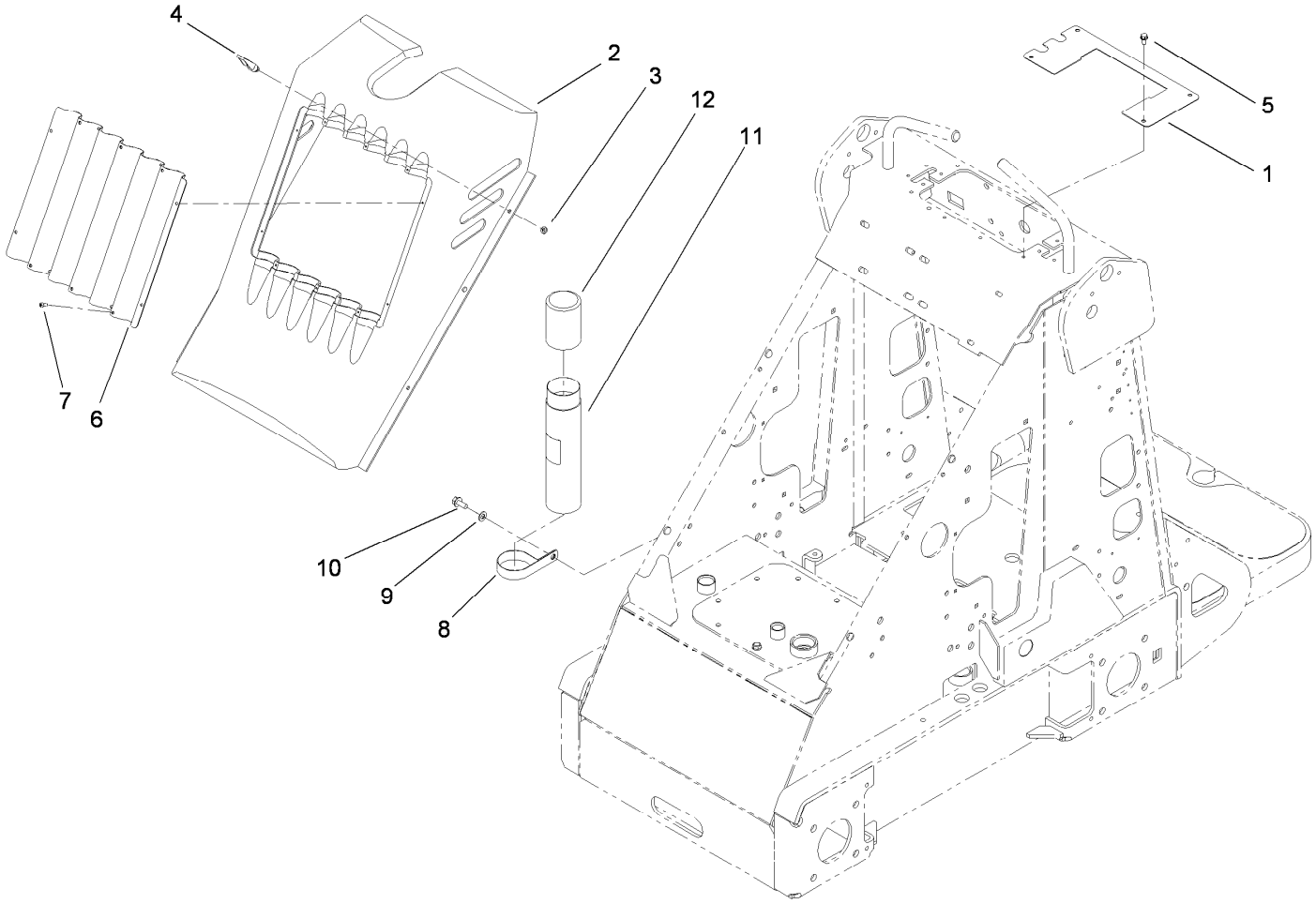


# Hood and Screen Assembly

| *Ref.* | *Part Number* | *Qty.* | *Description* |
|---|---|---|---|
| 1 | 108-9731-03 | 1 | Plate-Cover |
| 2 | 99-3164 | 1 | Cover-Hood |
| 3 | 99-3058 | 4 | Washer |
| 4 | 74-5950 | 4 | Latch-Swell |
| 5 | 32144-4 | 4 | Screw-HWH |
| 6 | 99-3147-03 | 1 | Grille-Screen |
| 7 | 32144-111 | 10 | Screw-PPH |
| 8 | 2412-133 | 1 | Clamp-R |
| 9 | 3256-23 | 1 | Washer-Plain |
| 10 | 32144-70 | 1 | Screw-HWHTF |
| 11 | 104-7050 | 1 | Tube-Manual |
| 12 | 104-7048 | 1 | Cap-Housing |

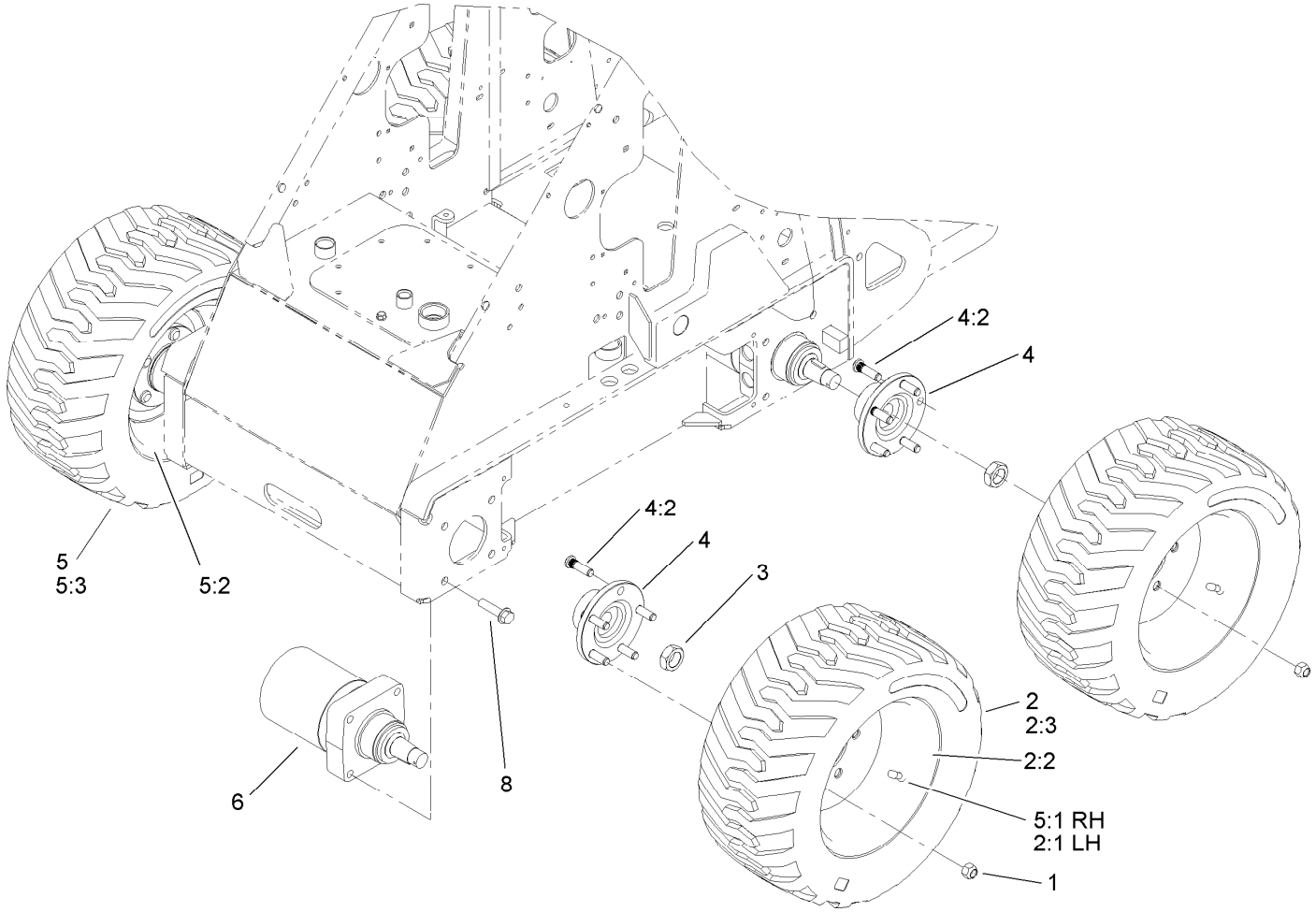


# Wheel and Motor Assembly

| *Ref.* | *Part Number* | *Qty.* | *Description* |
|---|---|---|---|
| 1 | 242-50 | 20 | Nut-Lug |
| 2 | 98-2747 | 2 | LH Wheel And Tire ASM |
| 2:1 | 232-27 | 1 | Stem-Valve |
| 2:2 | 98-2748 | 1 | Wheel |
| 2:3 | 98-2749 | 1 | Tire |
| 3 | 106-8159 | 4 | Nut-Lock |
| 4 | 99-3064 | 4 | Hub ASM |
| 4:2 | 10-6830 | 5 | Stud-Type, Drive |
| 5 | 99-1447 | 2 | RH Wheel And Tire ASM |
| 5:1 | 232-27 | 1 | Stem-Valve |
| 5:2 | 98-2748 | 1 | Wheel |
| 5:3 | 98-2749 | 1 | Tire |
| 6 | 99-3052 | 4 | HYD Motor ASM |
| 8 | 3234-27 | 16 | Screw-HHF |

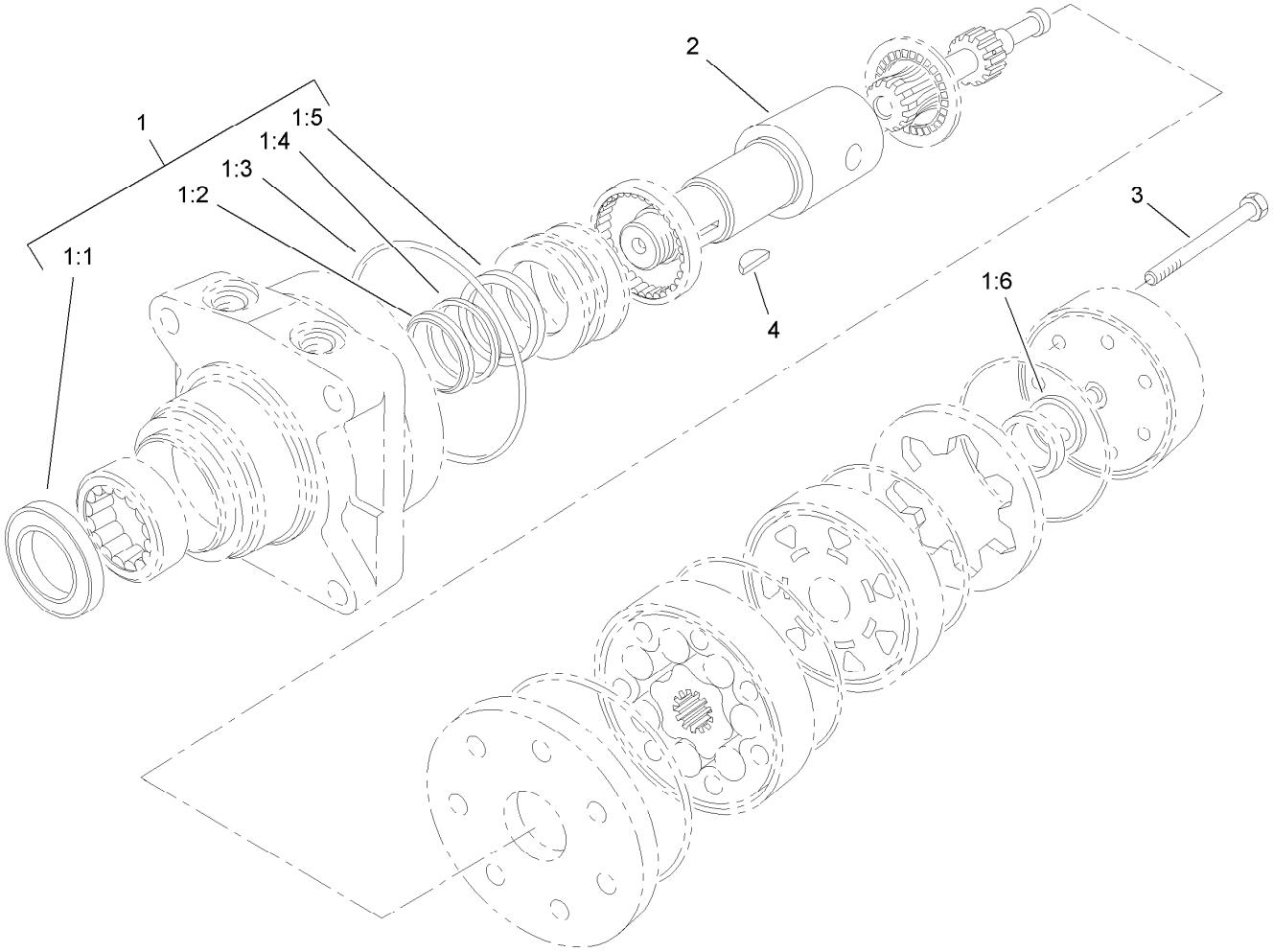


# Hydraulic Motor Assembly No. 99-3052

| *Ref.* | *Part Number* | *Qty.* | *Description* |
|---|---|---|---|
| 1 | 94-8178 | 1 | Seal Kit |
| 1:1 | | 1 | Seal-Dirt And Water ● |
| 1:2 | | 1 | Washer-Backup ● |
| 1:3 | | 5 | Seal-Ring ● |
| 1:4 | | 1 | Washer-Backup ● |
| 1:5 | | 1 | Seal-Inner ● |
| 1:6 | | 1 | Seal-Commutator ● |
| 2 | 99-3090 | 1 | Shaft-Coupling |
| 3 | 99-3091 | 7 | Screw-Cap, HH |
| 4 | 3257-42 | 1 | Key-Woodruff |

● Not serviced separately

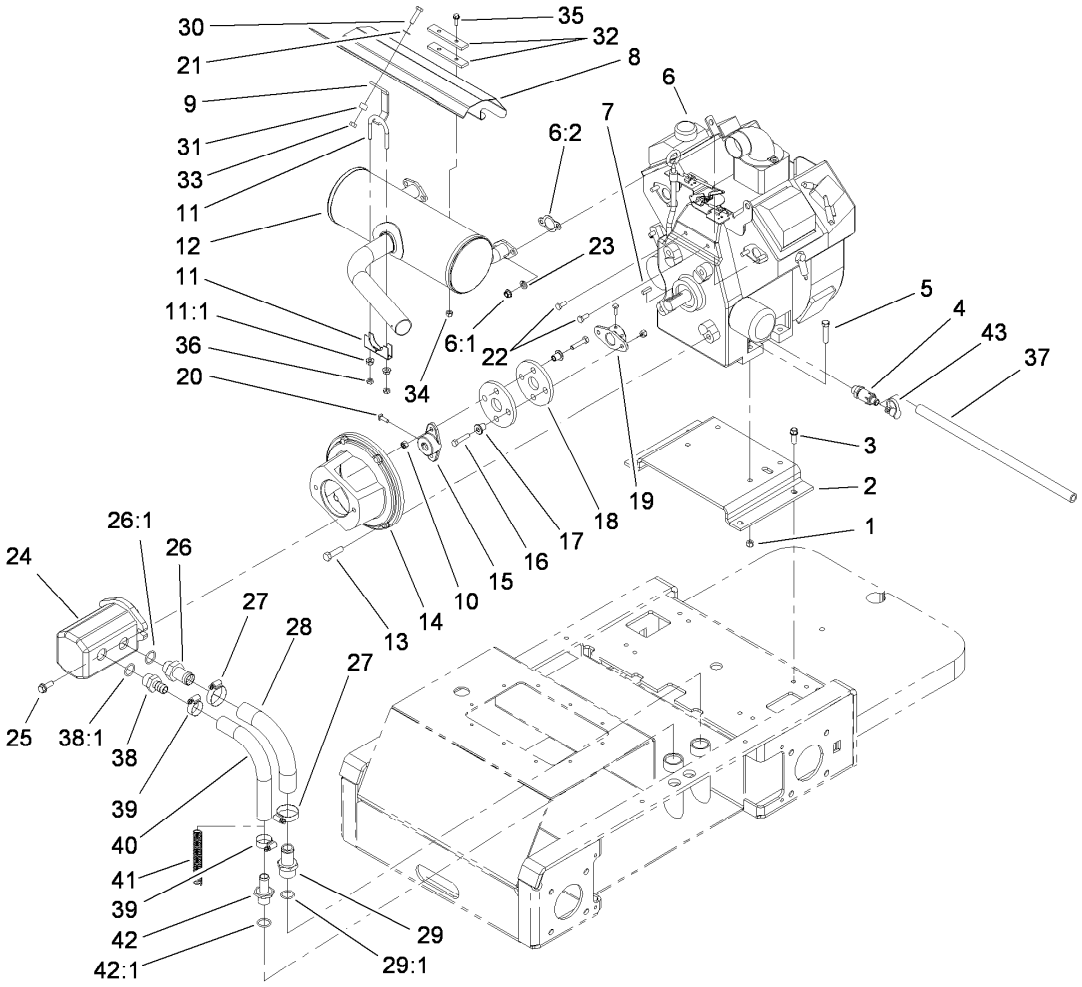


# Engine and Pump Assembly

| Ref. | Part Number | Qty. | Description |
|---|---|---|---|
| 1 | 3296-39 | 4 | Nut-Lock, NI |
| 2 | 98-4666-03 | 1 | Mount-Engine |
| 3 | 95-1726 | 4 | Screw-Taptite |
| 4 | 92-6877 | 1 | Valve-Drain, Oil |
| 5 | 323-9 | 4 | Screw-HH |
| 6 | | 1 | Engine-Kohler, Ch680-3015 ● |
| 6:1 | 92-6780 | 4 | Nut-HF |
| 6:2 | 93-0350 | 2 | Gasket-Exhaust |
| 7 | 10-7070 | 1 | Key-Square |
| 8 | 99-3115-03 | 1 | Shield-Muffler |
| 9 | 99-3138-03 | 1 | Support-Shield |
| 10 | 3296-29 | 4 | Nut-Lock, NI |
| 11 | 2112-9 | 1 | Clamp |
| 11:1 | 32128-20 | 2 | Nut-HF |
| 12 | 105-8381 | 1 | Muffler |
| 13 | 324-6 | 4 | Screw-HH |
| 14 | 98-2751-03 | 1 | Mount-Pump |
| 15 | 98-4701 | 1 | Hub-Pump |
| 16 | 322-7 | 4 | Screw-HH |
| 17 | 71-4411 | 4 | Spacer |
| 18 | 44-2230 | 2 | Coupling-Rubber |
| 19 | 110-5236 | 1 | Hub-Engine |
| 20 | 3241-6 | 4 | Screw-SQH |
| 21 | 3256-23 | 1 | Washer-Plain |
| 22 | 33114-020 | 2 | Screw-HH |
| 23 | 3253-4 | 4 | Washer-Lock |
| 24 | 108-4710 | 1 | HYD Pump ASM |
| 25 | 66-9300 | 2 | Screw-HHF |
| 26 | 99-3017 | 1 | Fitting |
| 26:1 | 237-81 | 1 | O-Ring |
| 27 | 2412-111 | 2 | Clamp-Hose, W/Liner |
| 28 | 99-3046 | 1 | Hose-Suction, Formed |
| 29 | 354-78 | 1 | Fitting-STR |
| 29:1 | 237-146 | 1 | O-Ring |
| 30 | 322-6 | 1 | Screw-HH |
| 31 | 98-4695 | 1 | Spacer |
| 32 | 99-3116-03 | 2 | Spacer-Bar |
| 33 | 32152-1 | 1 | Nut-Lock, Cone |
| 34 | 32152-4 | 2 | Nut-Lock, Cone |
| 35 | 3234-21 | 2 | Screw-HHF |
| 36 | 3218-2 | 2 | Nut-Hex Jam |
| 37 | 98-4667 | 1 | Hose |
| 38 | 354-73 | 1 | Fitting |
| 38:1 | 237-81 | 1 | O-Ring |
| 39 | 2412-129 | 2 | Clamp-Hose |
| 40 | 98-2713 | 1 | Hose-Suction, HYD |
| 41 | 99-5349 | 1 | Spring-Compression |
| 42 | 99-6932 | 1 | Fitting-STR |

● Not serviced separately

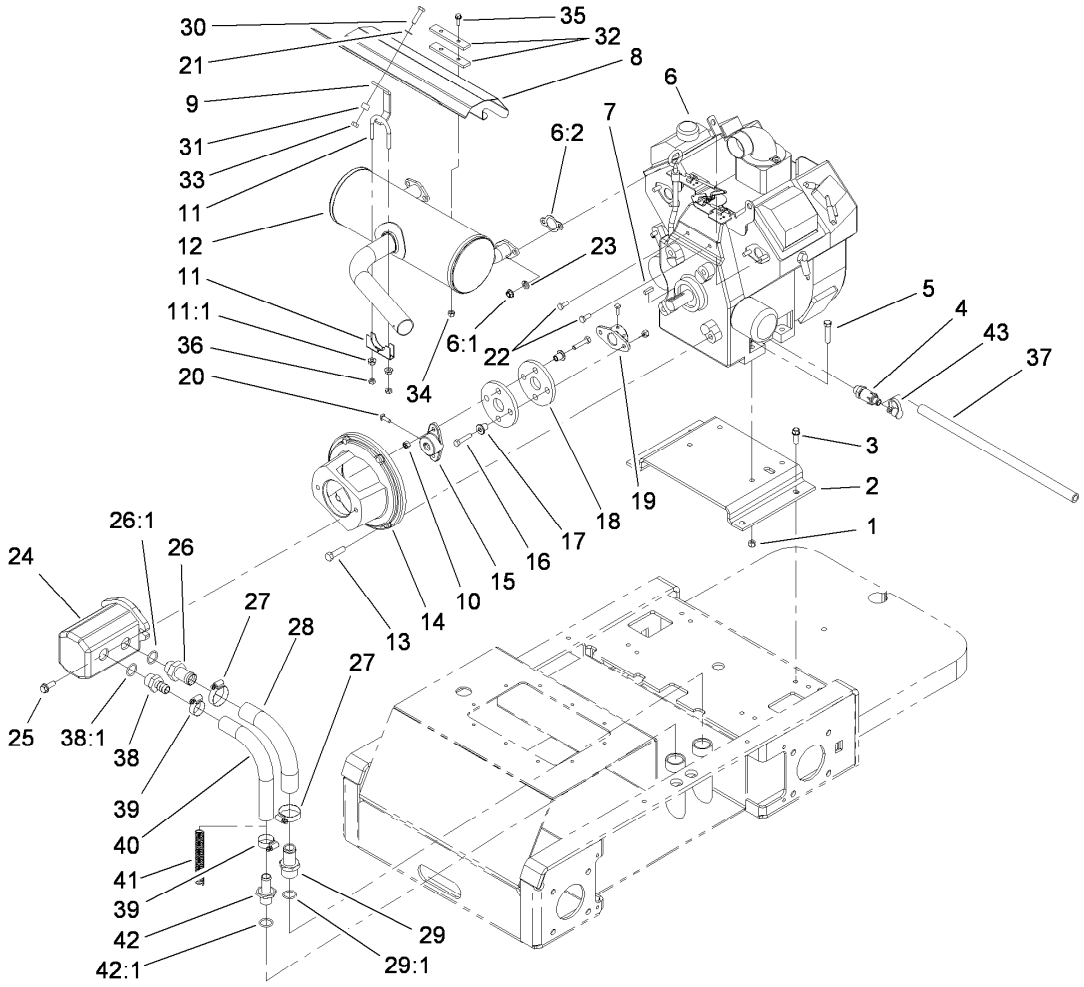


# Engine and Pump Assembly (continued)

| Ref. | Part Number | Qty. | Description |
|---|---|---|---|
| 42:1 | 237-117 | 1 | O-Ring |
| 43 | 354-79 | 1 | Cap-Dust |

● Not serviced separately

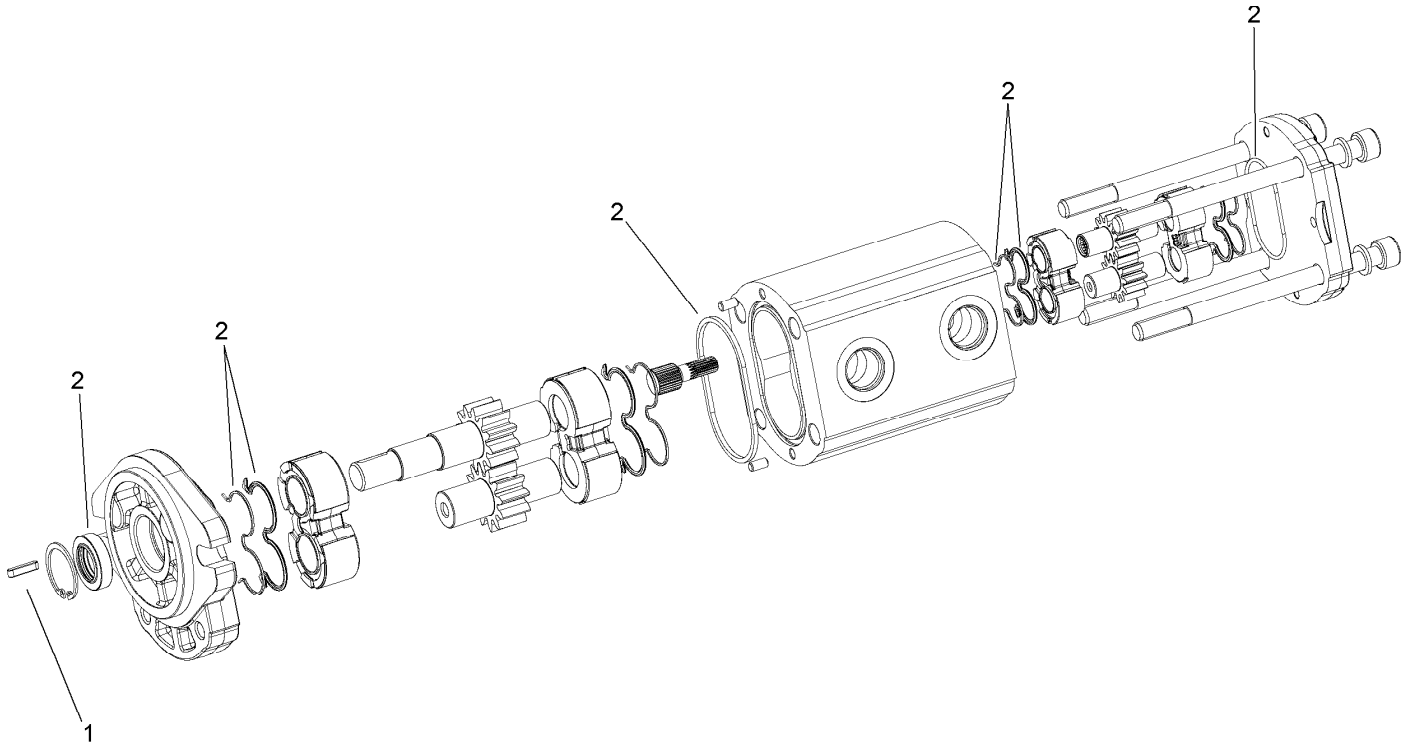


# Hydraulic Motor Assembly No. 108-4710

| *Ref.* | *Part Number* | *Qty.* | *Description* |
|---|---|---|---|
| 1 | 98-4700 | 1 | Key-Square |
| 2 | 99-1353 | 1 | Seal Kit |

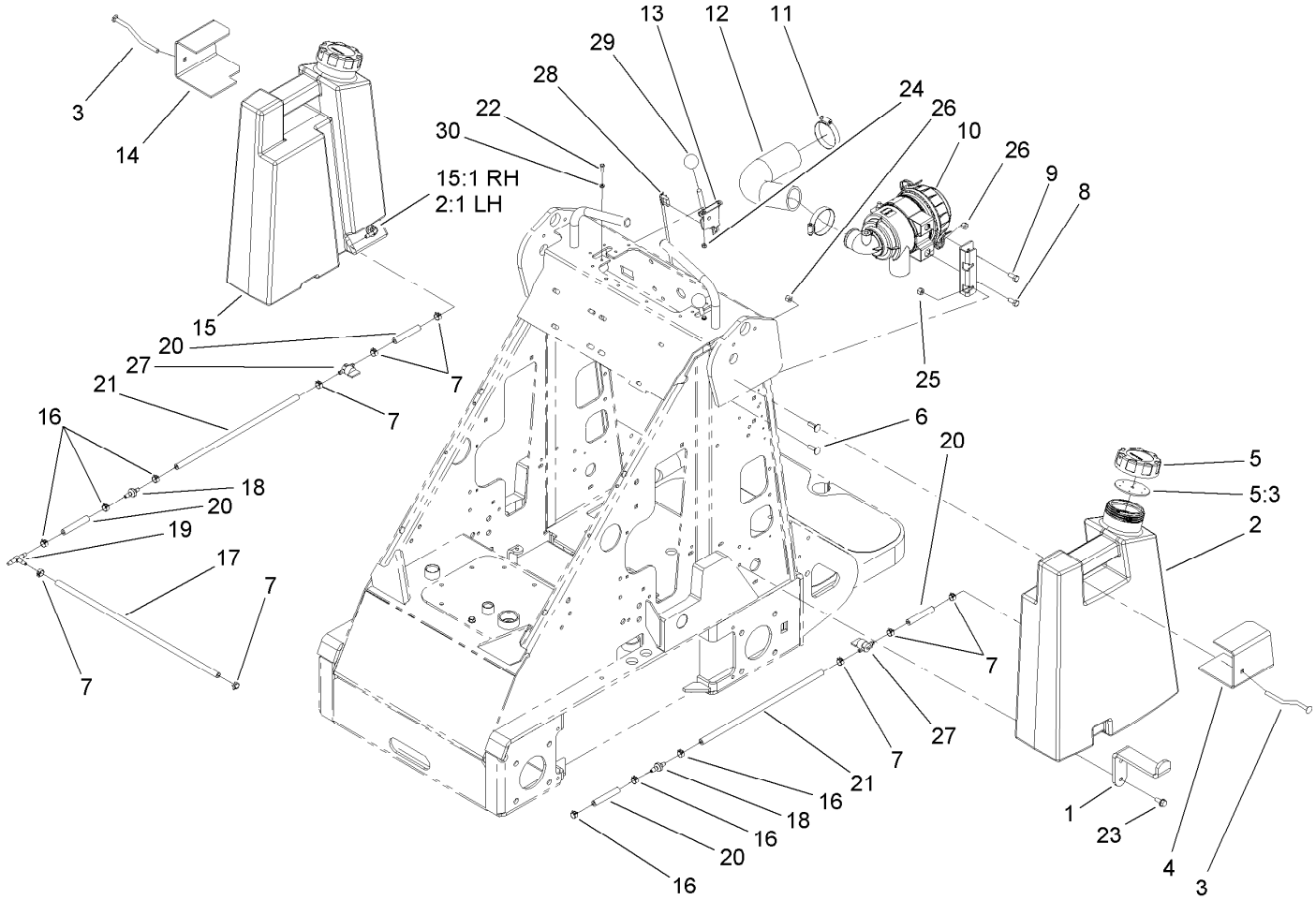


# Fuel Tank and Air Filter Assembly

| Ref. | Part Number | Qty. | Description |
|---|---|---|---|
| 1 | 98-4656-03 | 2 | Mount-Bottom, Tank |
| 2 | 105-8439 | 1 | LH Fuel Tank ASM |
| 2:1 | 103-2605 | 1 | Fitting-Fuel, Bulkhead |
| 3 | 98-4657 | 2 | Bolt-Mount |
| 4 | 99-1444-03 | 1 | Plate-Mount, Left |
| 5 | 104-7418 | 2 | Cap-Fuel, Gas |
| 5:3 | 104-7420 | 1 | Gasket-Vented |
| 6 | 3230-2 | 2 | Bolt-CARR |
| 7 | 2412-98 | 7 | Clamp-Hose |
| 8 | 322-3 | 2 | Screw-HH |
| 9 | 99-3080-03 | 1 | Mount-Cleaner, Air |
| 10 | 99-3160 | 1 | Air Cleaner ASM |
| 11 | 2412-42 | 2 | Clamp-Hose |
| 12 | 99-3148 | 1 | Hose-Air |
| 13 | 108-9730 | 2 | Lever-Control |
| 14 | 98-4655-03 | 1 | Plate-Mount |
| 15 | 105-8440 | 1 | RH Fuel Tank ASM |

| Ref. | Part Number | Qty. | Description |
|---|---|---|---|
| 15:1 | 103-2605 | 1 | Fitting-Fuel, Bulkhead |
| 16 | 92-2379 | 7 | Clamp-Hose |
| 17 | 110-5701 | 1 | Hose-Fuel |
| 18 | 99-5000 | 2 | Valve-Check, Fuel |
| 19 | 99-5005 | 1 | Fitting-Tee, Barbed |
| 20 | 109-0304 | 4 | Hose-Fuel |
| 21 | 109-0296 | 2 | Hose-Fuel |
| 22 | 3290-134 | 4 | Screw |
| 23 | 32144-70 | 4 | Screw-HWHTF |
| 24 | 32149-7 | 4 | Nut-Keps |
| 25 | 32128-20 | 2 | Nut-HF |
| 26 | 3296-29 | 4 | Nut-Lock, NI |
| 27 | 1-603770 | 2 | Valve-Fuel |
| 28 | 108-4718 | 2 | Cable-Control |
| 29 | 233-42 | 2 | Knob |
| 30 | 3256-51 | 4 | Washer-Flat |

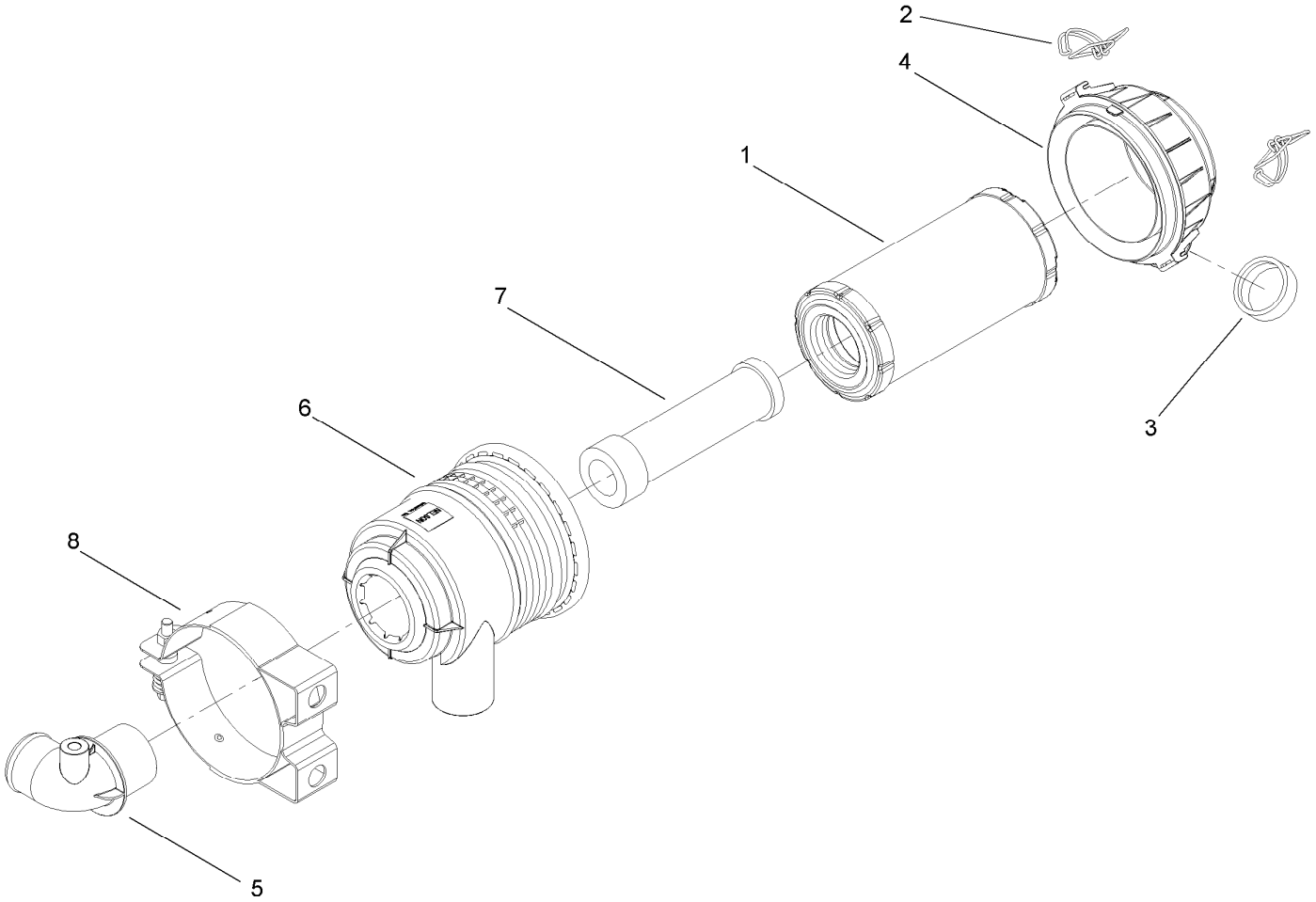


# Air Cleaner Assembly No. 99-3160

| *Ref.* | *Part Number* | *Qty.* | *Description* |
|---|---|---|---|
| 1 | 99-3173 | 1 | Element-Filter, Air |
| 2 | 99-3174 | 2 | Clip-Cleaner, Air |
| 3 | 99-3175 | 1 | Valve-Ejector, Dust |
| 4 | 99-3176 | 1 | Cover |
| 5 | 99-3183 | 1 | Tube ASM |
| 6 | 99-3184 | 1 | Housing |
| 7 | 99-3198 | 1 | Filter-Safety |
| 8 | 99-3197 | 1 | Mounting Bracket ASM |

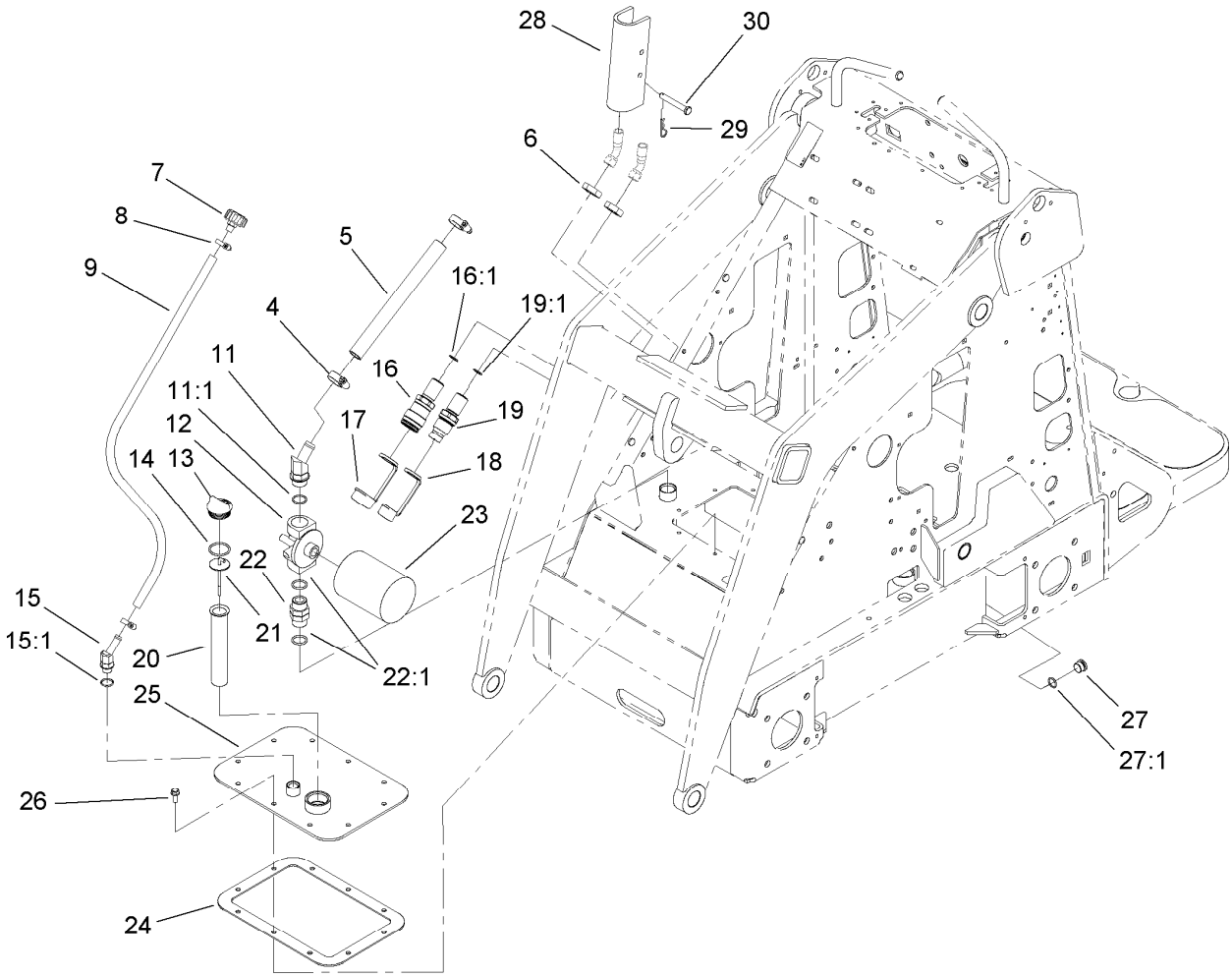


# Hydraulic Tank and Filter Assembly

| Ref. | Part Number | Qty. | Description |
|---|---|---|---|
| 4 | 2412-129 | 2 | Clamp-Hose |
| 5 | 98-4745 | 1 | Hose-HYD, Suction, Hi |
| 6 | 340-74 | 2 | Nut-Lock, Bulkhead |
| 7 | 68-6150 | 1 | Breather |
| 8 | 2412-36 | 2 | Clamp-Hose |
| 9 | 98-2708 | 1 | Hose-Vent |
| 11 | 354-127 | 1 | Fitting-Elbow45 |
| 11:1 | 237-81 | 1 | O-Ring |
| 12 | 92-5821 | 1 | Head-Filter |
| 13 | 93-7498 | 1 | Plug-Plastic |
| 14 | 237-123 | 1 | O-Ring |
| 15 | 354-126 | 1 | Fitting-Elbow, 45 |
| 15:1 | 237-79 | 1 | O-Ring |
| 16 | 105-8394 | 1 | Bulkhead Coupler ASM |
| 16:1 | 237-65 | 1 | O-Ring |
| 17 | 100-8816 | 1 | Cap-Dust, Coupler |
| 18 | 100-8815 | 1 | Cap-Dust, Nipple |

| Ref. | Part Number | Qty. | Description |
|---|---|---|---|
| 19 | 105-8395 | 1 | Bulkhead Nipple ASM |
| 19:1 | 237-65 | 1 | O-Ring |
| 19:2 | 100-6120 | 1 | Seal Kit ● |
| 20 | 61-2790 | 1 | Filter-Screen |
| 21 | 100-2097 | 1 | Dipstick-Oil |
| 22 | 98-9906 | 1 | Fitting-Thread, Straight |
| 22:1 | 237-81 | 2 | O-Ring |
| 23 | 54-0110 | 1 | Filter-Oil, Transmission |
| 24 | 98-9927 | 1 | Gasket-Cover |
| 25 | 100-1713-01 | 1 | Cover |
| 26 | 98-9940 | 10 | Screw-HHF |
| 27 | 353-988 | 1 | Plug-Hex |
| 27:1 | 237-79 | 1 | O-Ring |
| 28 | 98-4675-01 | 2 | Lock-Cylinder |
| 29 | 3290-467 | 2 | Pin-Hair |
| 30 | 283-52 | 2 | Pin-Clevis |

● Not illustrated

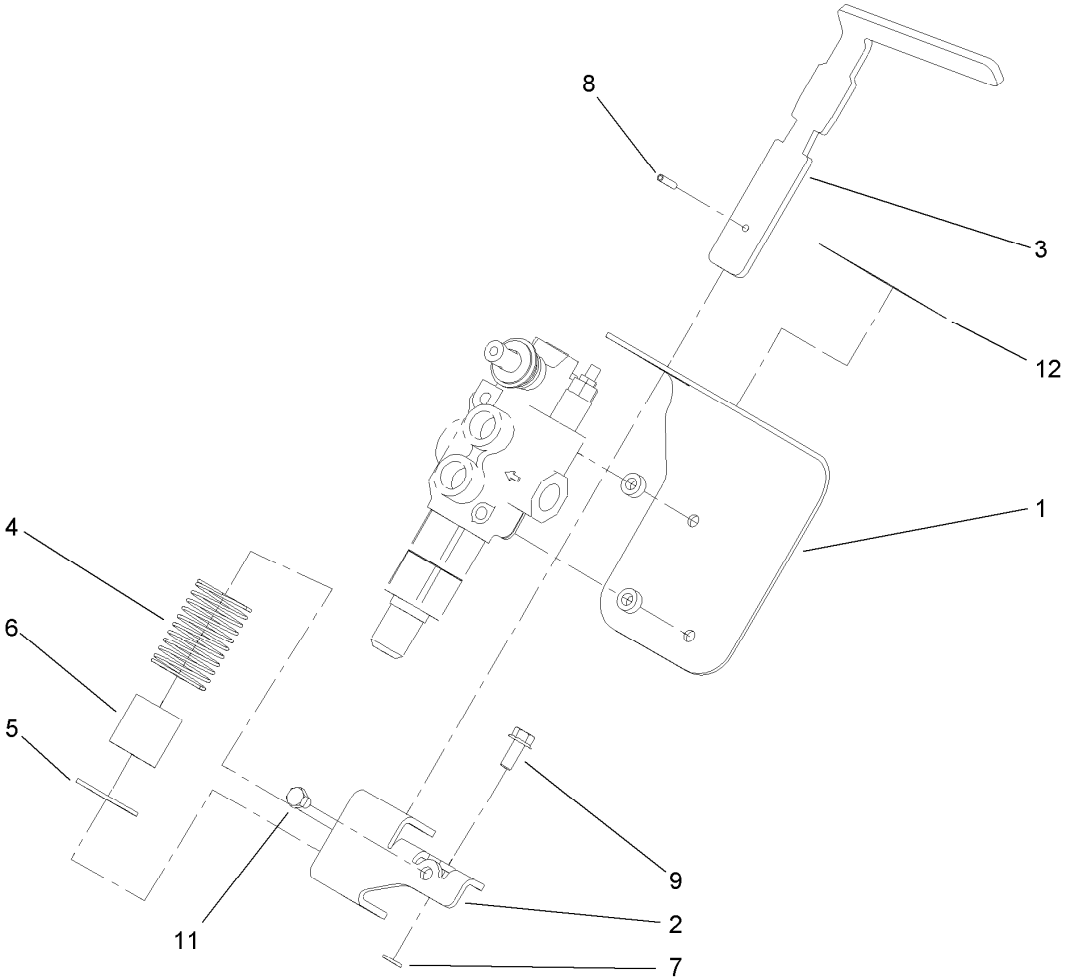


# Auxiliary Control Lever Assembly

| *Ref.* | *Part Number* | *Qty.* | *Description* |
|---|---|---|---|
| 1 | 110-0121-03 | 1 | Bracket-Auxiliary |
| 2 | 114-1263-03 | 1 | Mount-Lever, Auxiliary |
| 3 | 110-0123 | 1 | Handle-Lever, Auxiliary |
| 4 | 110-0124 | 1 | Spring |
| 5 | 110-0125 | 1 | Retainer-Spring, Auxiliary |
| 6 | 110-0160 | 1 | Tube-Spring |
| 7 | 3253-4 | 1 | Washer-Lock |
| 8 | 32121-3 | 1 | Pin-Spring |
| 9 | 33104-020 | 1 | Screw-HHF |
| 11 | 33114-010 | 1 | Screw-HH |
| 12 | 108-4733 | 1 | Decal-Auxiliary |

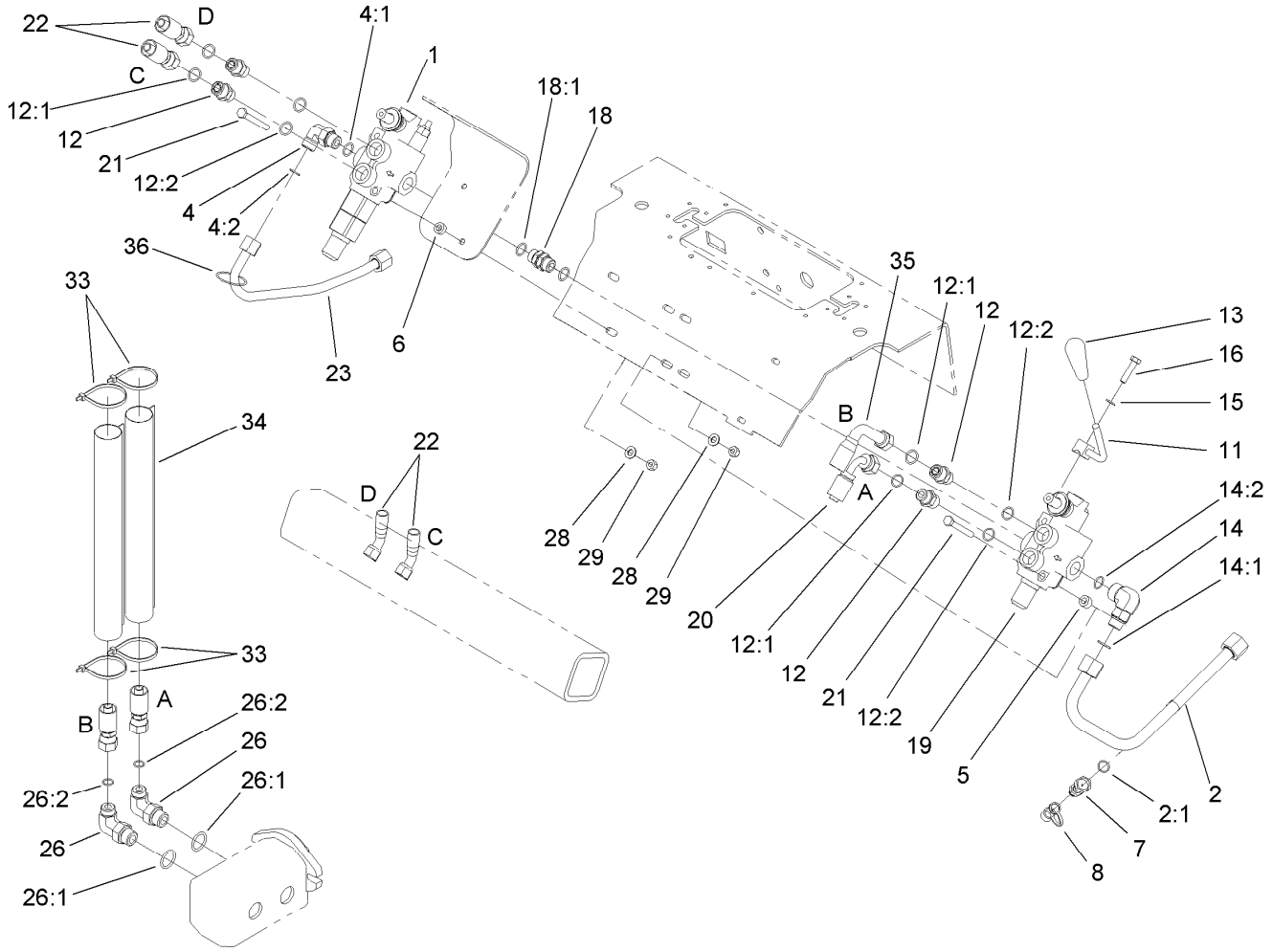


# Hydraulic Valve Assembly

| Ref. | Part Number | Qty. | Description |
|---|---|---|---|
| 1 | 99-3077 | 1 | Valve-HYD, Auxiliary |
| 2 | 108-4716 | 1 | HYD Tube ASM |
| 2:1 | 237-22 | 1 | O-Ring |
| 4 | 340-98 | 1 | Fitting-Elbow, 90 DEG |
| 4:1 | 237-79 | 1 | O-Ring |
| 4:2 | 237-30 | 1 | O-Ring |
| 5 | 98-4695 | 2 | Spacer |
| 6 | 100-2085 | 2 | Spacer |
| 7 | 86-5480 | 1 | Nipple-Test |
| 8 | 354-79 | 1 | Cap-Dust |
| 11 | 108-9709-03 | 1 | Lever-Control |
| 12 | 340-4 | 4 | Fitting-Straight |
| 12:1 | 237-30 | 1 | O-Ring |
| 12:2 | 237-79 | 1 | O-Ring |
| 13 | 98-0152 | 1 | Knob-Tapered |
| 14 | 340-153 | 1 | Fitting-Elbow, 90 DEG |
| 14:1 | 237-79 | 1 | O-Ring |
| 14:2 | 237-151 | 1 | O-Ring |

| Ref. | Part Number | Qty. | Description |
|---|---|---|---|
| 15 | 3253-4 | 1 | Washer-Lock |
| 16 | 33114-035 | 1 | Screw-HH |
| 18 | 95-3209 | 1 | Fitting-Thread, Straight |
| 18:1 | 237-79 | 2 | O-Ring |
| 19 | 99-3072 | 1 | Valve-Selector, HYD |
| 20 | 98-4747 | 1 | Hose-HYD |
| 21 | 322-12 | 4 | Screw-HH |
| 22 | 100-8817 | 2 | Hose-HYD |
| 23 | 105-7879 | 1 | Tube-HYD |
| 26 | 340-105 | 2 | Fitting-Elbow, 90 DEG |
| 26:1 | 237-80 | 1 | O-Ring |
| 26:2 | 237-30 | 1 | O-Ring |
| 28 | 3256-23 | 4 | Washer-Plain |
| 29 | 3296-29 | 4 | Nut-Lock, NI |
| 33 | 3290-379 | 4 | Tie-Cable |
| 34 | 108-9715 | 2 | Sleeve-Thermal |
| 35 | 99-3008 | 1 | Hose-HYD |
| 36 | 3290-379 | 8 | Tie-Cable |

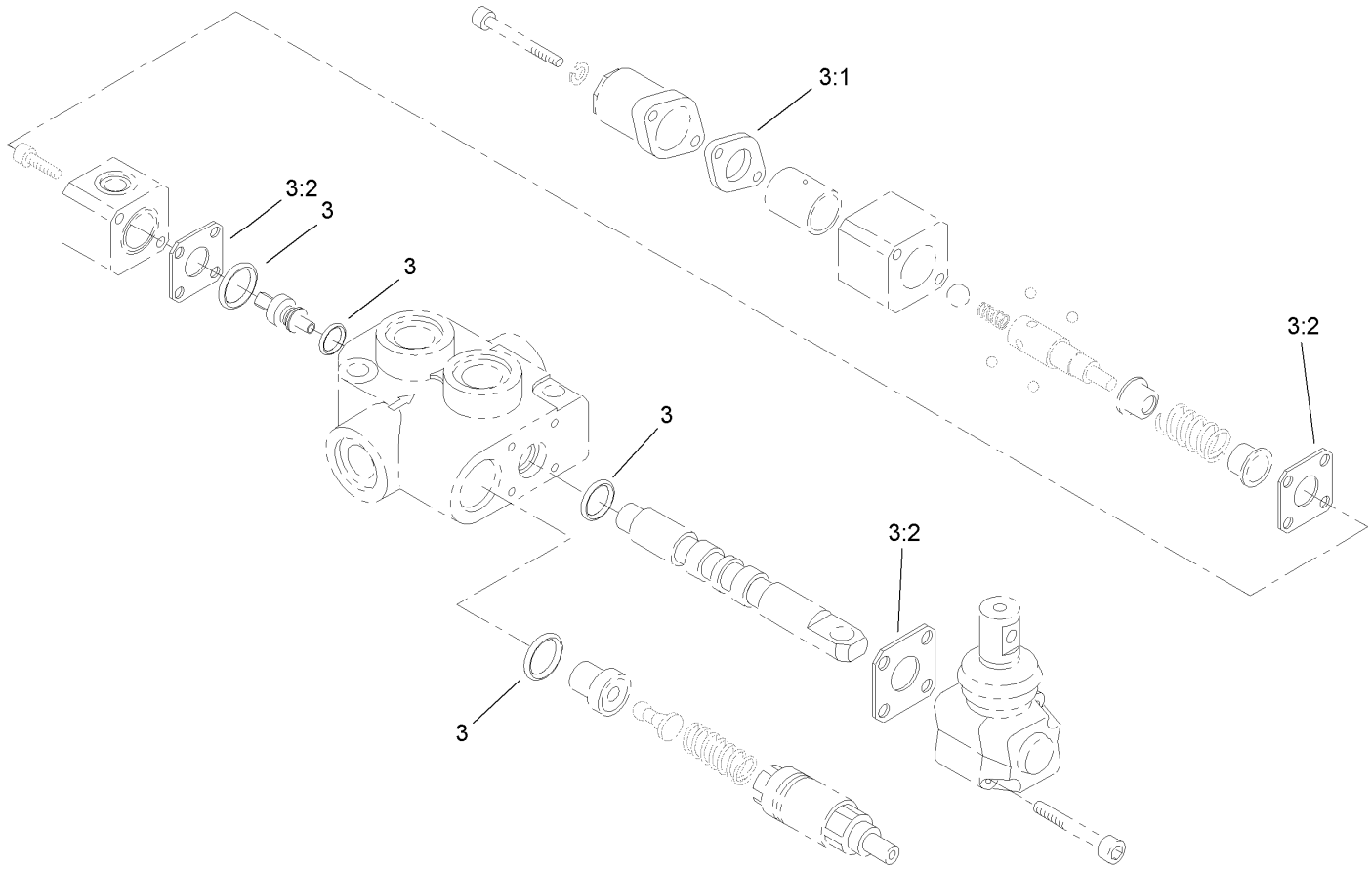


# Auxiliary Hydraulic Valve Assembly No. 99-3077

| *Ref.* | *Part Number* | *Qty.* | *Description* |
|---|---|---|---|
| 3 | 99-4391 | 1 | Seal Kit |
| 3:1 | 99-3074 | 1 | Gasket |
| 3:2 | 99-3075 | 3 | Gasket |

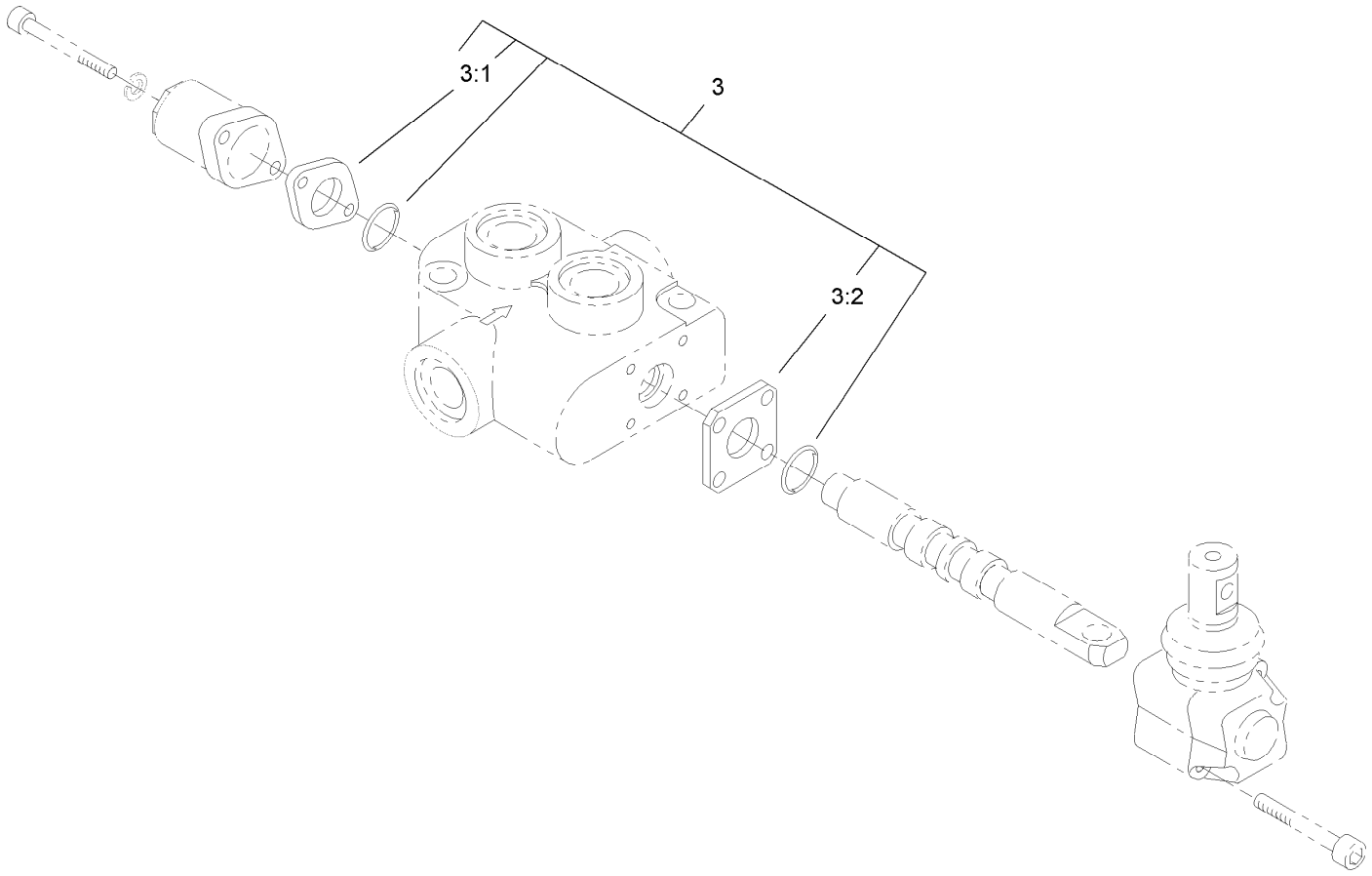


# Hydraulic Selector Valve Assembly No. 99-3072

| *Ref.* | *Part Number* | *Qty.* | *Description* |
|---|---|---|---|
| 3 | 99-4391 | 1 | Seal Kit |
| 3:1 | 99-3074 | 1 | Gasket |
| 3:2 | 99-3075 | 3 | Gasket |

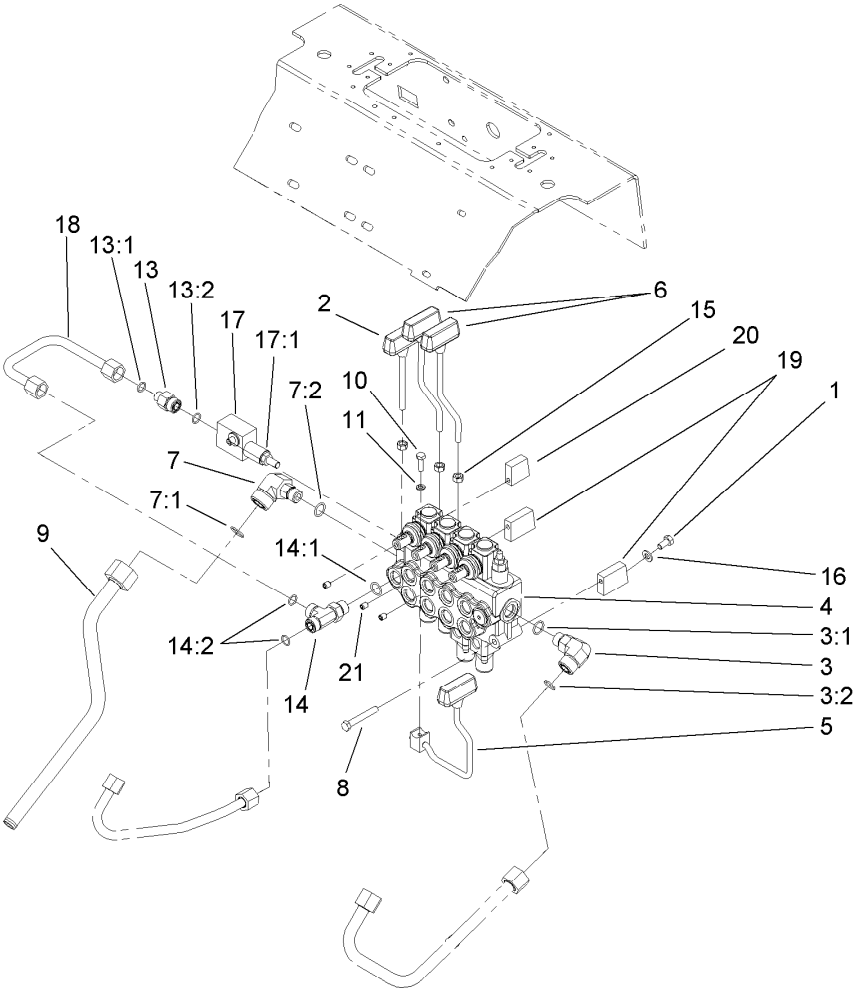


# Four Spool Valve Assembly

| Ref. | Part Number | Qty. | Description |
|---|---|---|---|
| 1 | 322-2 | 3 | Screw-HH |
| 2 | 105-7881 | 1 | Lever-Cylinder |
| 3 | 340-153 | 1 | Fitting-Elbow, 90 DEG |
| 3:1 | 237-79 | 1 | O-Ring |
| 3:2 | 237-151 | 1 | O-Ring |
| 4 | 105-8377 | 1 | HYD Four Spool Valve ASM |
| 5 | 106-8165 | 1 | Lever-Control |
| 6 | 104-5733 | 2 | Lever-Drive |
| 7 | 92-5696 | 1 | Fitting-Elbow, 90 DEG |
| 7:1 | 237-58 | 1 | O-Ring |
| 7:2 | 237-79 | 1 | O-Ring |
| 8 | 322-11 | 3 | Screw-HH |
| 9 | 106-8177 | 1 | Tube-Tank, HYD |
| 10 | 321-5 | 1 | Screw-HH |
| 11 | 3253-3 | 1 | Washer-Lock |

| Ref. | Part Number | Qty. | Description |
|---|---|---|---|
| 13 | 340-5 | 1 | Fitting-Straight |
| 13:1 | 237-42 | 1 | O-Ring |
| 13:2 | 237-30 | 1 | O-Ring |
| 14 | 340-109 | 1 | Fitting-Tee |
| 14:1 | 237-79 | 1 | O-Ring |
| 14:2 | 237-30 | 2 | O-Ring |
| 15 | 33014-00 | 3 | Nut-Hex |
| 16 | 33094-00 | 3 | Washer-Plain |
| 17 | 105-7882 | 1 | Relief Valve ASM |
| 17:1 | 105-8358 | 1 | Cartridge-Valve, Relief |
| 17:2 | 105-8357 | 1 | Seal Kit ● |
| 18 | 108-4717 | 1 | Tube-HYD |
| 19 | 108-4728 | 2 | Spacer V |
| 20 | 105-7870 | 1 | Spacer-Upper V |
| 21 | 105-4068 | 3 | Screw-Set, HSH |

● Not illustrated

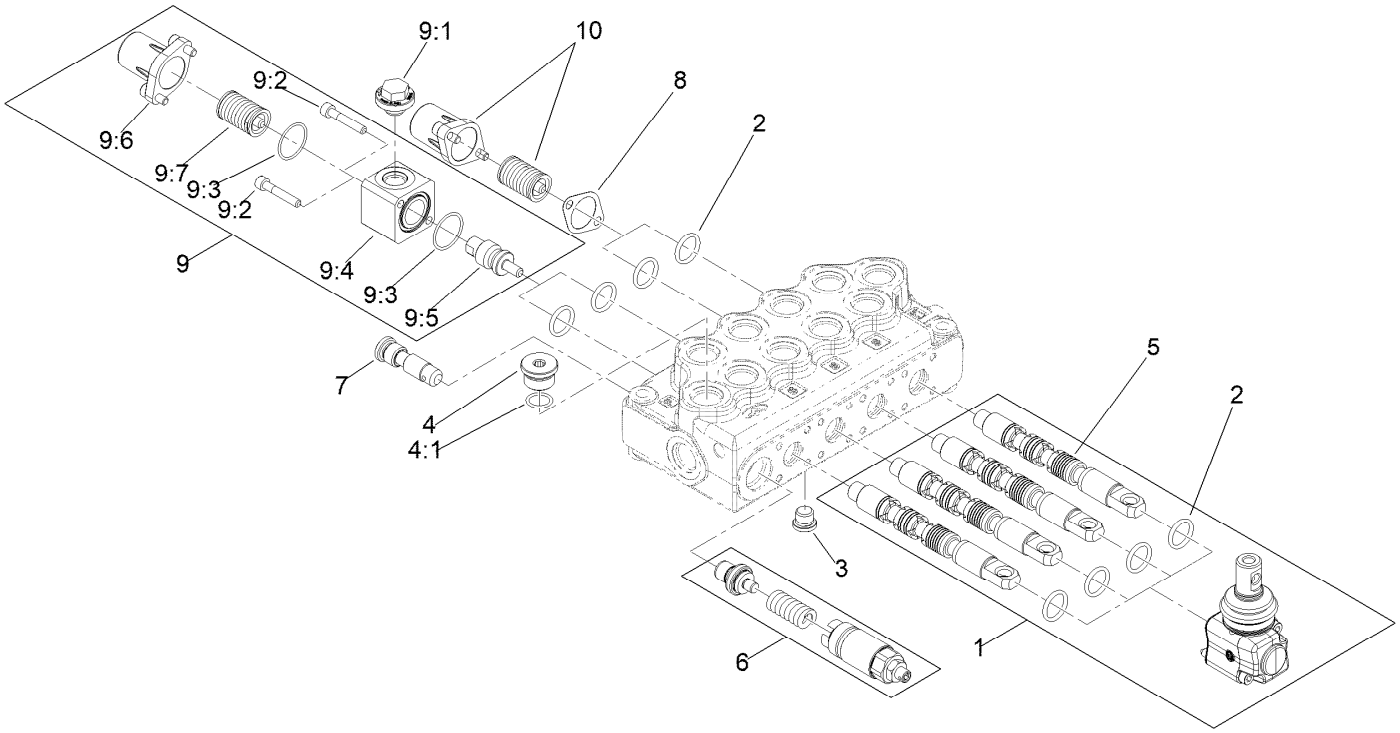


# Four Spool Hydraulic Valve Assembly No. 105-8377

| Ref. | Part Number | Qty. | Description |
|---|---|---|---|
| 1 | 139-8891 | 4 | Lsg/S5 Lever Kit With Screws |
| 2 | 139-8886 | 8 | O-Ring Seal, 70 Sh |
| 3 | 139-8884 | 1 | SAE 4 Plug |
| 4 | 353-988 | 1 | Plug-Hex |
| 4:1 | 237-79 | 1 | O-Ring |
| 5 | 105-8441 | 4 | Spool-Valve |
| 6 | 139-8890 | 1 | Vmd5 (Jn) Inlet Part |
| 7 | 139-8880 | 1 | Kit-Valve Body |
| 8 | 99-3074 | 2 | Gasket |
| 9 | 139-8887 | 2 | S5 Command Kit |
| 9:1 | | 1 | Plug ● |
| 9:2 | | 2 | Screw ● |
| 9:3 | | 2 | Oring ● |
| 9:4 | | 1 | Block ● |
| 9:5 | | 1 | Pin ● |
| 9:6 | | 1 | End Cap ● |
| 9:7 | | 1 | Spring ● |
| 10 | 161-1080 | 2 | S5 End Cap Kit |

● Not serviced separately

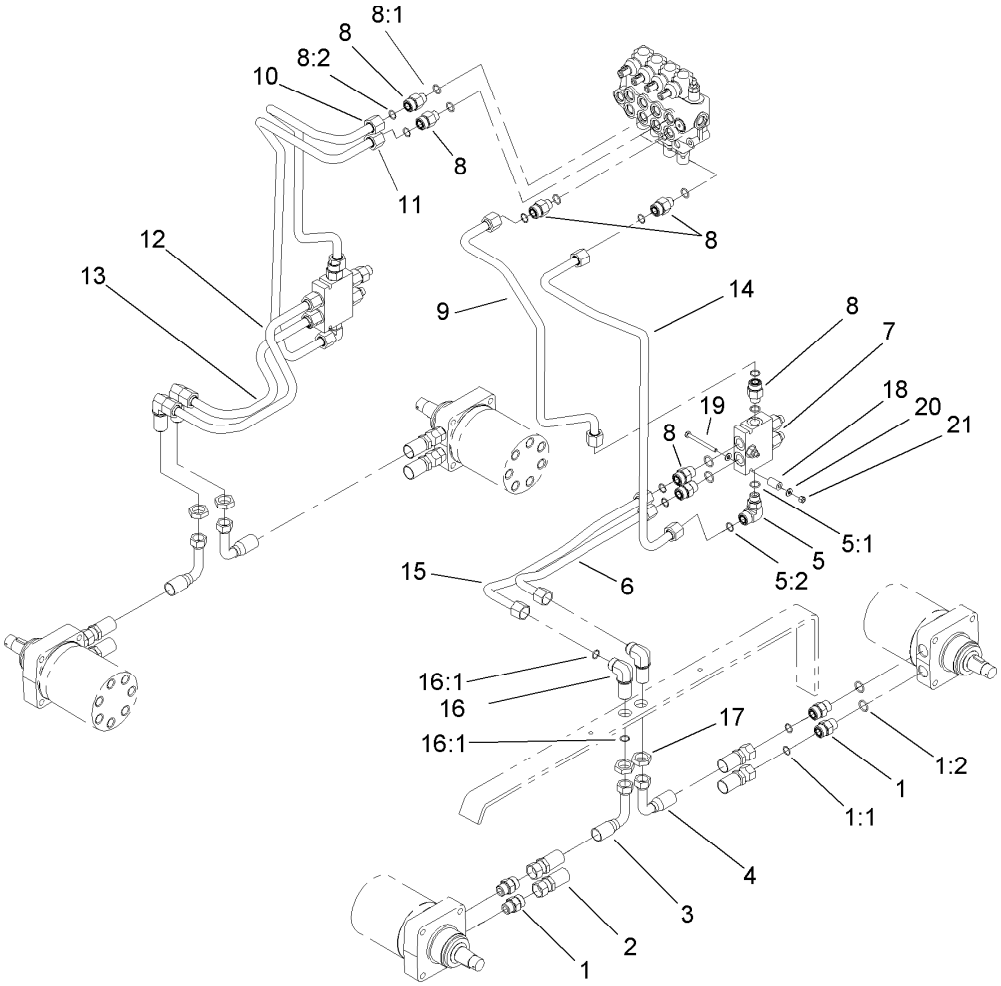


# Hydraulic Motor Assembly

| Ref. | Part Number | Qty. | Description |
|---|---|---|---|
| 1 | 340-7 | 8 | Fitting-Straight |
| 1:1 | 237-65 | 1 | O-Ring |
| 1:2 | 237-80 | 1 | O-Ring |
| 2 | 99-3012 | 2 | Hose-HYD |
| 3 | 99-3010 | 2 | Hose-HYD |
| 4 | 99-3011 | 2 | Hose-HYD |
| 5 | 340-153 | 2 | Fitting-Elbow, 90 DEG |
| 5:1 | 237-79 | 1 | O-Ring |
| 5:2 | 237-151 | 1 | O-Ring |
| 6 | 99-3022 | 1 | Tube-HYD |
| 7 | 99-3040 | 2 | HYD Counterbalance Valve ASM |
| 8 | 340-155 | 10 | Fitting-Straight |
| 8:1 | 237-79 | 1 | O-Ring |
| 8:2 | 237-151 | 1 | O-Ring |

| Ref. | Part Number | Qty. | Description |
|---|---|---|---|
| 9 | 108-9729 | 1 | Tube-HYD |
| 10 | 108-9727 | 1 | Tube-HYD |
| 11 | 108-9726 | 1 | Tube-HYD |
| 12 | 99-3025 | 1 | Tube-HYD |
| 13 | 99-3028 | 1 | Tube-HYD |
| 14 | 108-9725 | 1 | Tube-HYD |
| 15 | 99-3026 | 1 | Tube-HYD |
| 16 | 340-72 | 4 | Fitting-Bulkhead, 90 DEG |
| 16:1 | 237-65 | 2 | O-Ring |
| 17 | 340-74 | 4 | Nut-Lock, Bulkhead |
| 18 | 99-3057 | 2 | Spacer-Valve |
| 19 | 321-23 | 2 | Screw-HH |
| 20 | 3256-22 | 4 | Washer-Flat |
| 21 | 3296-42 | 2 | Nut-Lock, NI |

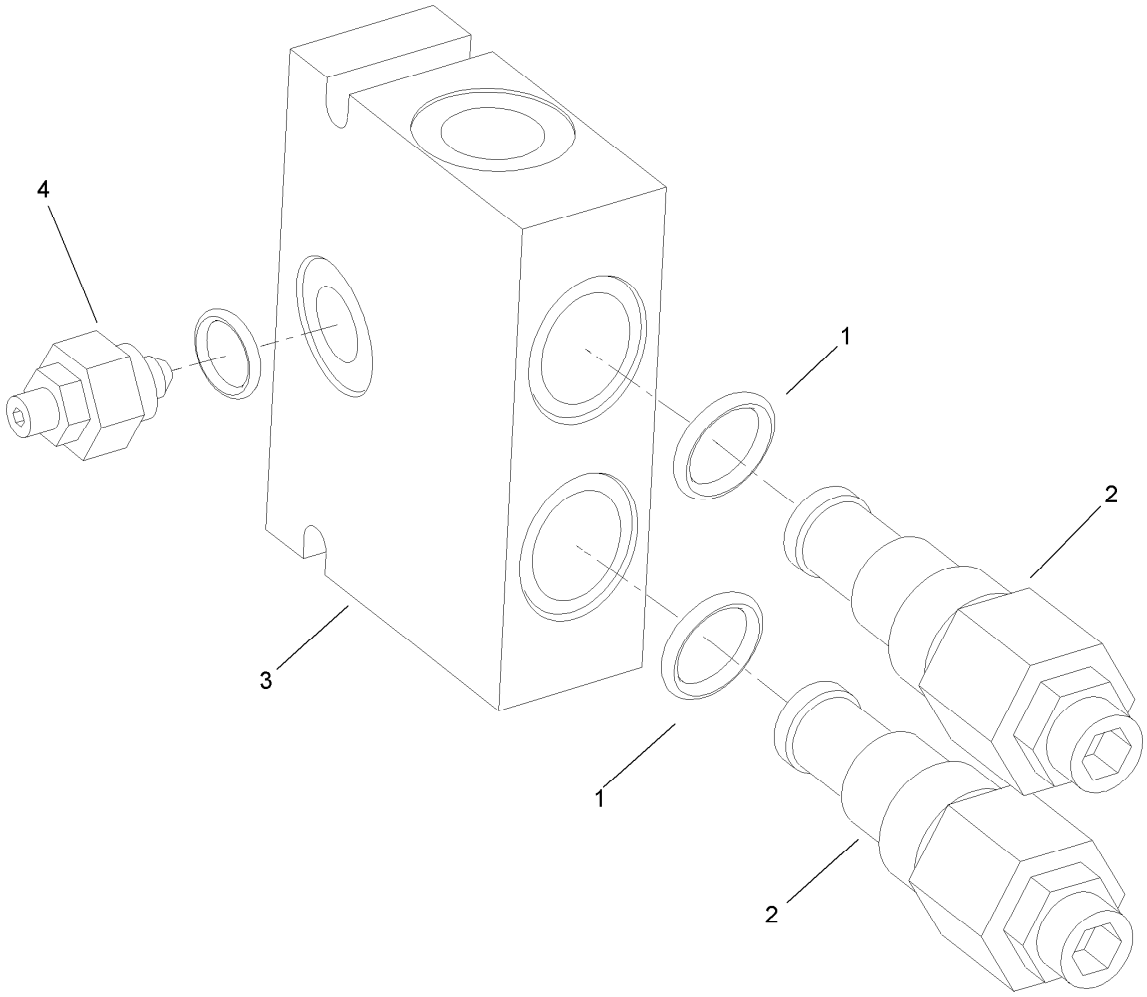


# Counterbalance Valve Assembly No. 99-3040

| *Ref.* | *Part Number* | *Qty.* | *Description* |
|---|---|---|---|
| 1 | 105-4099 | 1 | Seal Kit ● |
| 2 | 99-3271 | 2 | Valve-Cartridge |
| 3 | 100-8864 | 1 | Manifold ASM |
| 4 | 100-8865 | 1 | Needle Valve ASM |

● Not illustrated

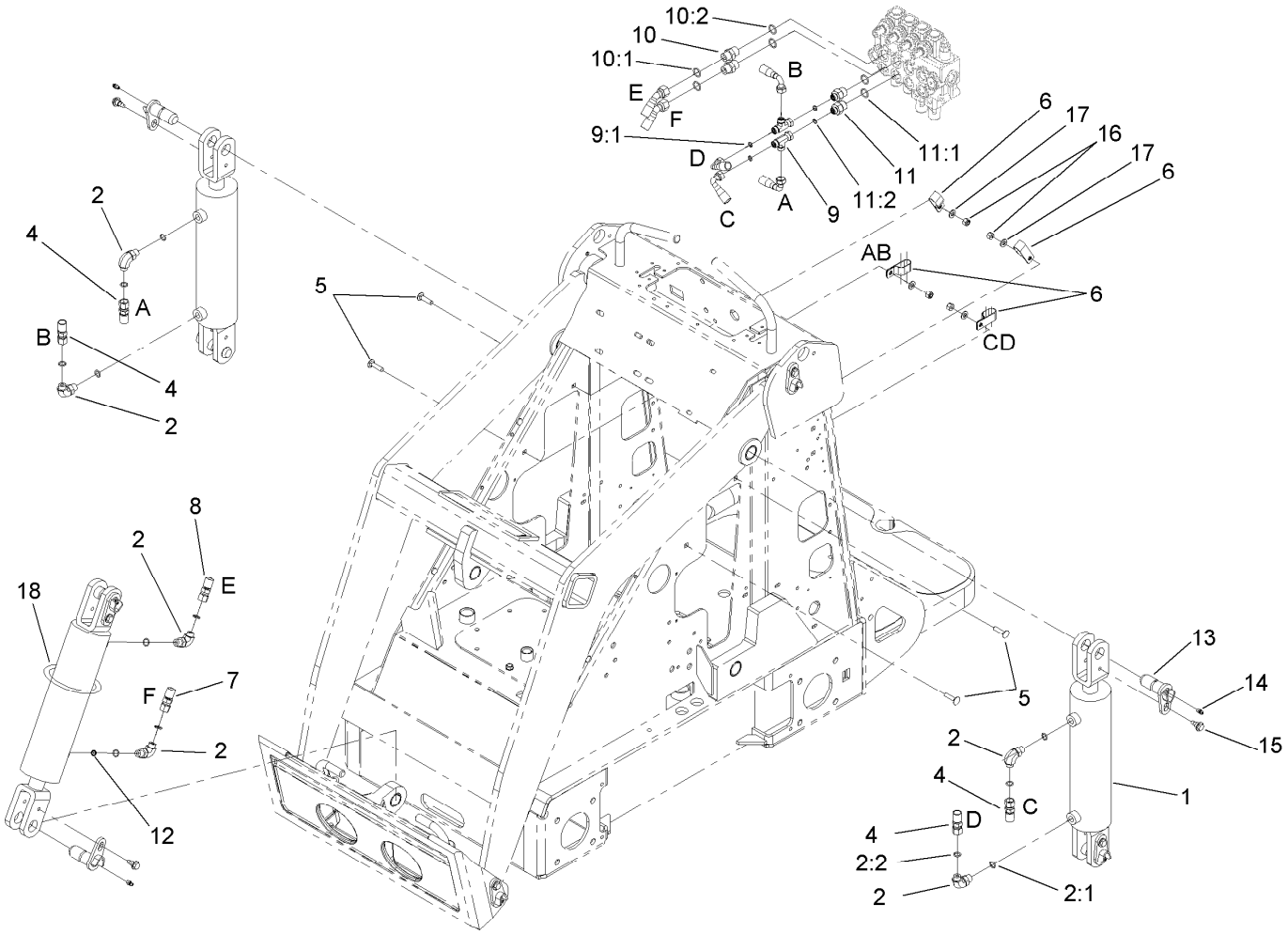


# Hydraulic Cylinder Assembly

| *Ref.* | *Part Number* | *Qty.* | *Description* |
|---|---|---|---|
| 1 | 105-7867 | 3 | HYD Cylinder ASM |
| 2 | 340-82 | 6 | Fitting-Elbow, 90 DEG |
| 2:1 | 237-42 | 1 | O-Ring |
| 2:2 | 237-21 | 1 | O-Ring |
| 4 | 98-4725 | 4 | Hose-HYD |
| 5 | 3230-3 | 4 | Screw-CARR |
| 6 | 2412-137 | 4 | Clamp-R, Double |
| 7 | 98-4726 | 1 | Hose-HYD |
| 8 | 98-4727 | 1 | Hose-HYD |
| 9 | 340-151 | 2 | Fitting-Tee |
| 9:1 | 237-75 | 3 | O-Ring |
| 10 | 340-3 | 2 | Fitting-Straight |
| 10:1 | 237-22 | 1 | O-Ring |
| 10:2 | 237-79 | 1 | O-Ring |
| 11 | 340-133 | 2 | Fitting-STR |
| 11:1 | 237-79 | 1 | O-Ring |
| 11:2 | 237-21 | 1 | O-Ring |
| 12 | 108-4714 | 1 | Orifice-Port Insert, One Way |
| 13 | 112-2609 | 6 | Pin-Pivot |
| 14 | 302-5 | 6 | Fitting-Grease |
| 15 | 99-5105 | 6 | Screw-Shoulder |
| 16 | 3296-29 | 4 | Nut-Lock, NI |
| 17 | 3256-23 | 4 | Washer-Plain |
| 18 | 3334-945 | 1 | Tie-Cable |

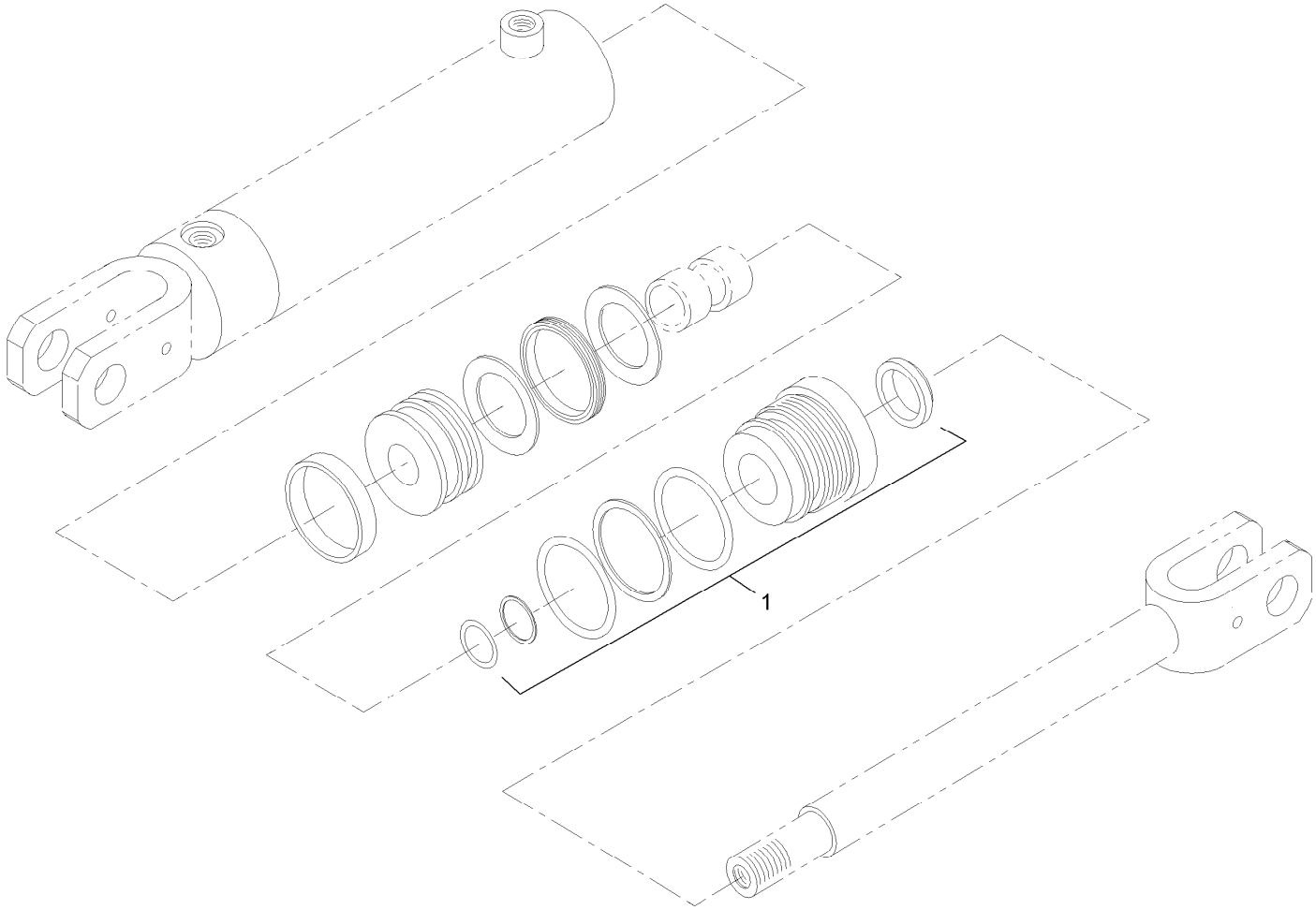


# Hydraulic Cylinder Assembly No. 105-7867

| *Ref.* | *Part Number* | *Qty.* | *Description* |
|---|---|---|---|
| 1 | 105-8356 | 1 | Seal Kit |

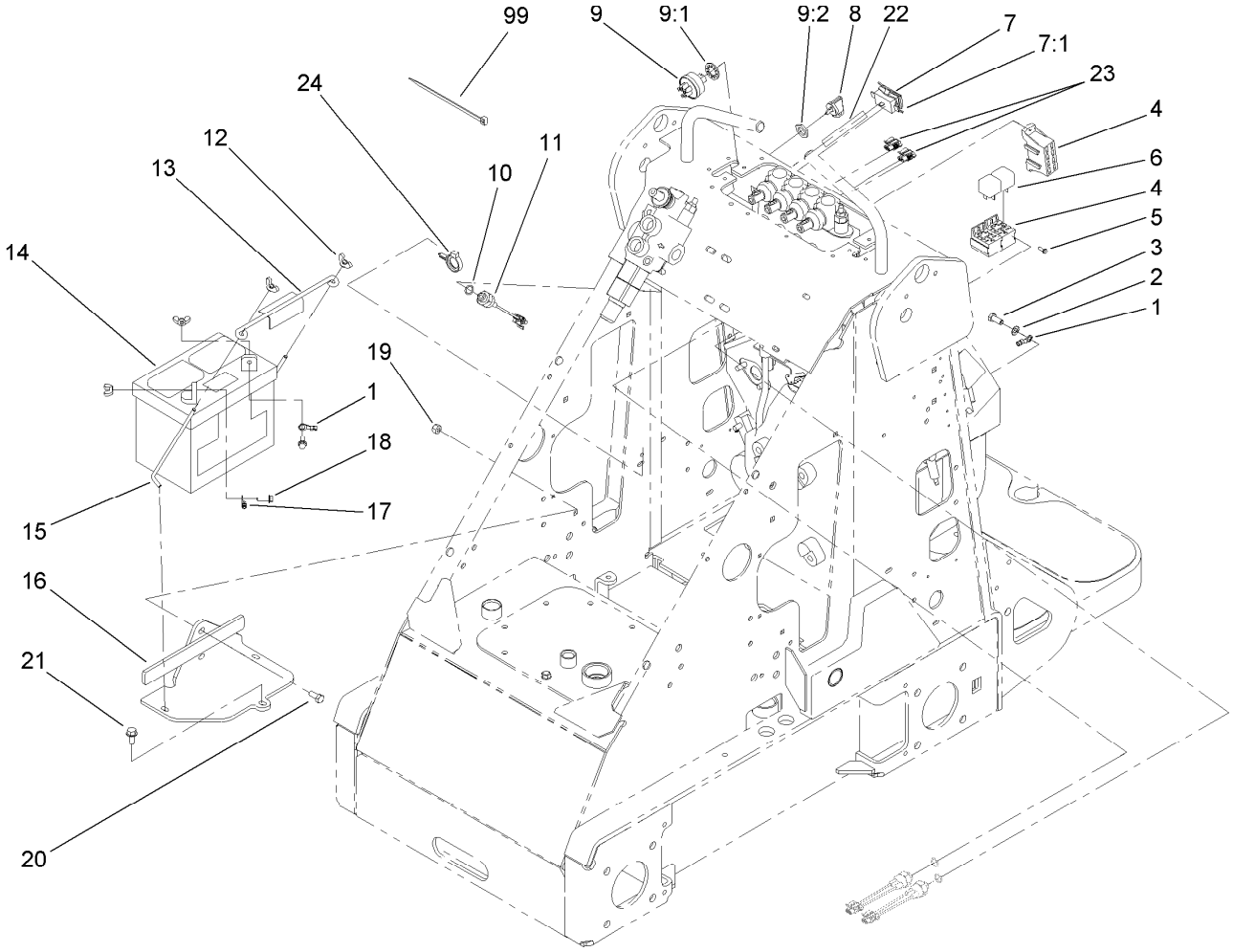


# Electrical Component Assembly

| Ref. | Part Number | Qty. | Description |
|---|---|---|---|
| 1 | 111075 | 1 | Wire ASM |
| 2 | 3255-8 | 1 | Washer-Lock |
| 3 | 33114-020 | 1 | Screw-HH |
| 4 | 104-7411 | 1 | Harness-Wire |
| 5 | 32144-87 | 3 | Screw-HWHTF |
| 6 | 98-7249 | 2 | Relay |
| 7 | 105-4067 | 1 | Hourmeter-Inductive |
| 7:1 | 104-4234 | 1 | Clip-Mounting |
| 8 | 63-8360 | 2 | Key-Ignition |
| 9 | 111216 | 1 | Ignition Switch ASM |
| 9:1 | 9201604 | 1 | Washer-Lock |
| 9:2 | 101884 | 1 | Nut |
| 10 | 237-42 | 3 | O-Ring |
| 11 | 72-4310 | 3 | Switch-Ball |

| Ref. | Part Number | Qty. | Description |
|---|---|---|---|
| 12 | 32103-22 | 4 | Nut-Wing |
| 13 | 113010 | 1 | Holddown-Battery |
| 14 | 104-2492 | 1 | Battery-Dry |
| 15 | 99-5027 | 2 | Retainer-Battery |
| 16 | 99-3060-03 | 1 | Battery Mount ASM |
| 17 | 100-1712 | 1 | Cable-Positive |
| 18 | 3234-4 | 2 | Screw-HHF |
| 19 | 3296-29 | 2 | Nut-Lock, NI |
| 20 | 322-4 | 2 | Screw-HH |
| 21 | 32144-70 | 1 | Screw-HWHTF |
| 22 | 104-7408 | 1 | Wire-Hourmeter |
| 23 | 99-1433 | 2 | Connector-Female |
| 24 | 105-1853 | 1 | Clamp-Hose |
| 99 | 3290-381 | 5 | Tie-Cable |

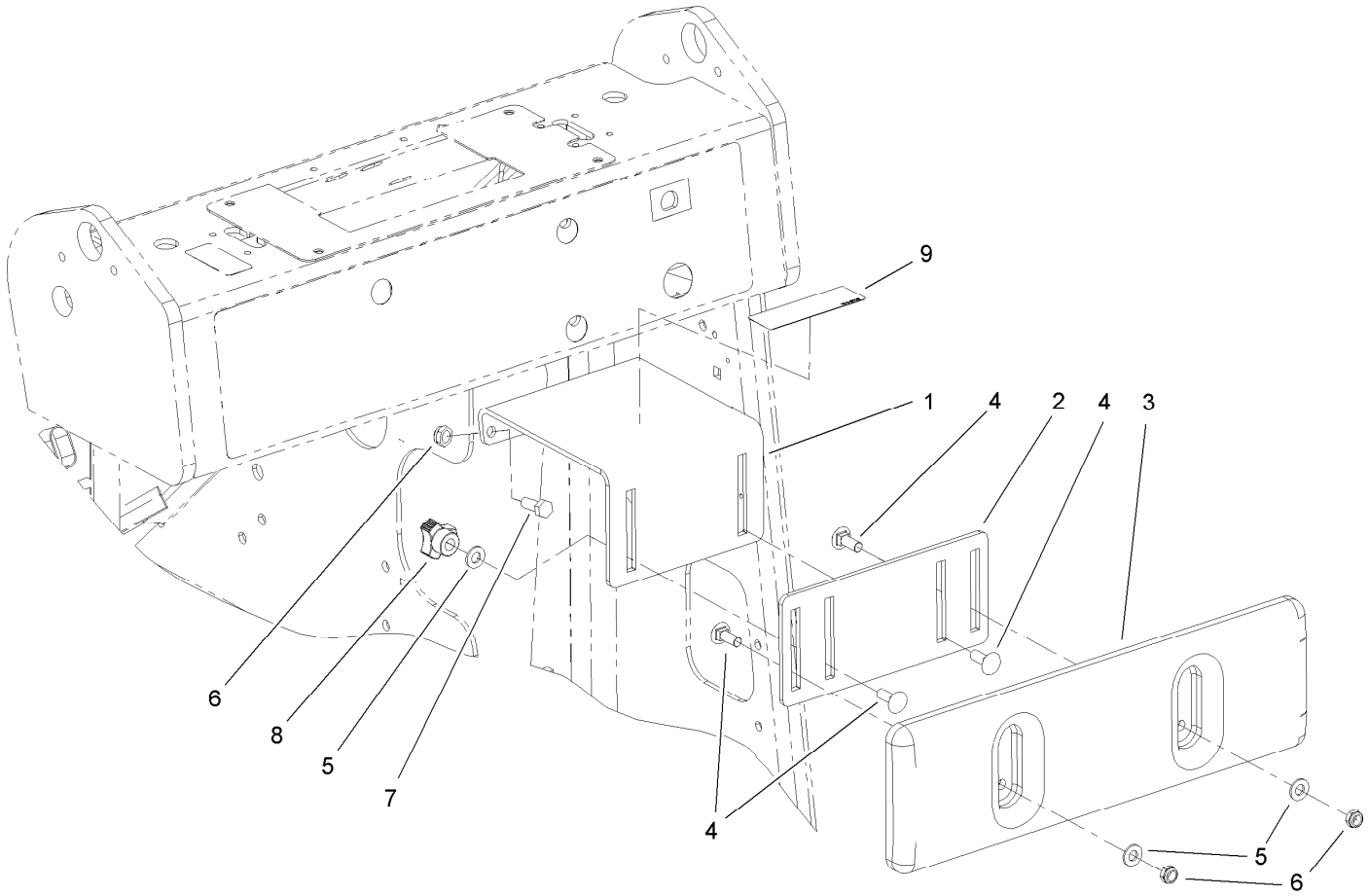


# Thigh Support Assembly

| *Ref.* | *Part Number* | *Qty.* | *Description* |
|---|---|---|---|
| 1 | 105-0297-03 | 1 | Thigh Support ASM |
| 2 | 105-0337-03 | 1 | Plate-Adjusting |
| 3 | 105-0333 | 1 | Support-Thigh |
| 4 | 3230-16 | 4 | Screw-CARR |
| 5 | 3256-70 | 4 | Washer-Flat |
| 6 | 3296-72 | 4 | Nut-Lock, NI |
| 7 | 322-4 | 2 | Screw-HH |
| 8 | 104-6156 | 2 | Knob-Adjustment |
| 9 | 104-6108 | 1 | Decal-Manual |

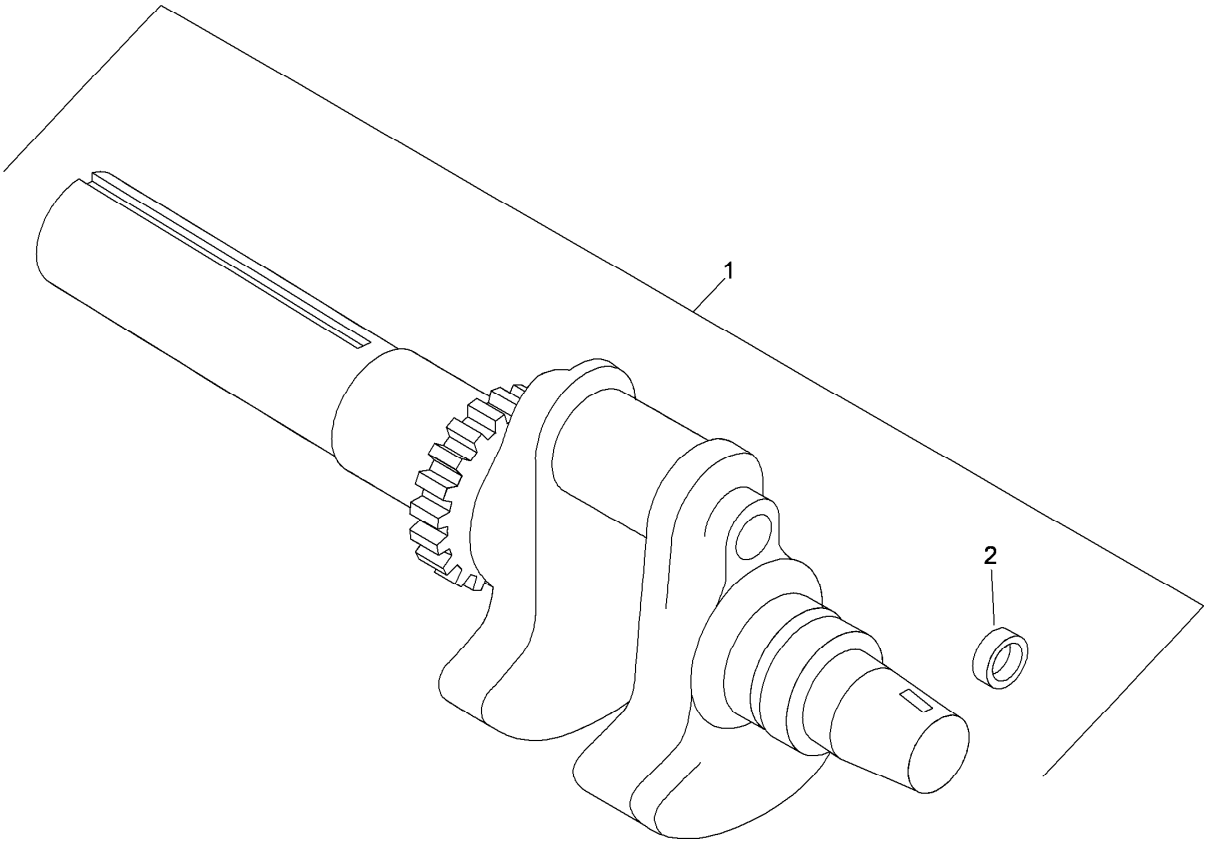


# Crankshaft Assembly
# Kohler CH680-3015

| Ref. | Part Number | Qty. | Description |
|---|---|---|---|
| 1 | 24 014 90-S | 1 | Crankshaft (Includes 2) ● |
| 2 | 52 139 09-S | 1 | Plug-Cup ● |

● Obtain parts from www.kohlerplus.com

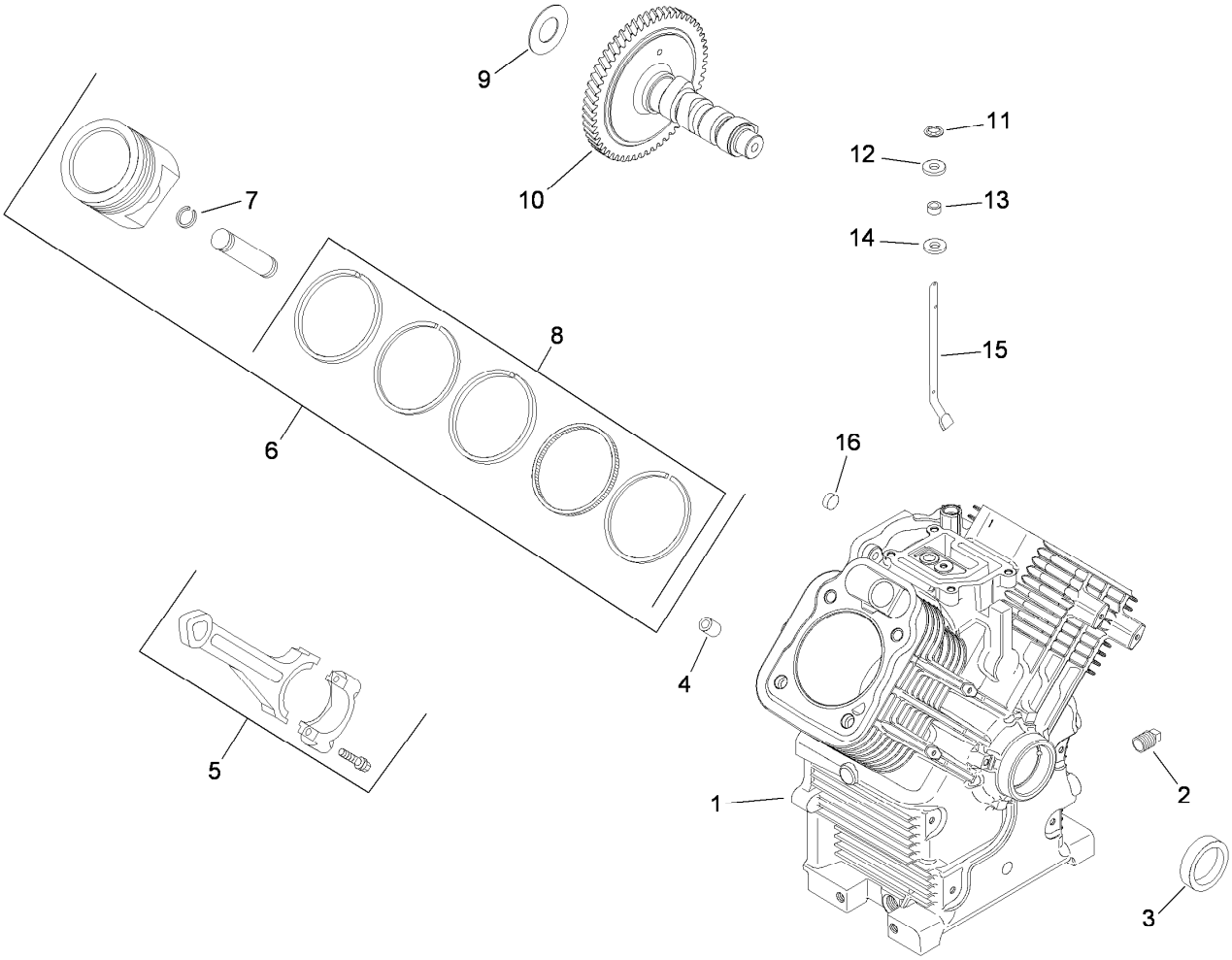


# Crankcase Assembly
# Kohler CH680-3015

| Ref. | Part Number | Qty. | Description |
|---|---|---|---|
| 1 | 24 782 15 | 1 | Miniblock ■ |
| 2 | 25 139 57-S | 2 | Plug-Pipe, Sq HD (3/8) ■ |
| 3 | 24 032 01-S | 1 | Seal-Oil ■ |
| 4 | 24 380 13-S | 6 | Pin-Locating ■ |
| 5 | 24 067 13-S | 2 | Rod-Connecting (Standard) ■ |
| 5 | 24 067 14-S | 2 | Rod-Connecting (.25) ■ |
| 6 | 24 874 09-S | 2 | Piston W/Ring Set (STD) (Includes Ref 7, 8) ■ |
| 6 | 24 874 10-S | 2 | Piston W/Ring Set (.25) (Includes Ref 7, 8) ■ |
| 6 | 24 874 11-S | 2 | Piston W/Ring Set (.50) (Includes Ref 7, 8) ■ |
| 6 | 24 874 15-S | 2 | Piston W/Ring Set (.08) (Includes Ref 7, 8) ■ |
| 7 | 24 018 01-S | 4 | Retainer-Pin, Piston ■ |
| 8 | 24 108 08-S | 2 | Ring Set (STD) ■ |
| 8 | 24 108 09-S | 2 | Ring Set (.25) ■ |
| 8 | 24 108 10-S | 2 | Ring Set (.50) ■ |
| 9 | 12 422 09-S | 1 | Shim-Camshaft (Red .032) ■ |
| 9 | 12 422 13-S | 1 | Shim-Camshaft (Black .04) ■ |
| 9 | 12 422 07-S | 1 | Shim-Camshaft (White .028) ■ |
| 9 | 12 422 08-S | 1 | Shim-Camshaft (Blue .03) ■ |
| 9 | 12 422 10-S | 1 | Shim-Camshaft (Yellow .034) ■ |
| 9 | 12 422 11-S | 1 | Shim-Camshaft (Green .036) ■ |
| 9 | 12 422 12-S | 1 | Shim-Camshaft (Gray .038) ■ |
| 10 | 24 012 10-S | 1 | Camshaft Kit (Includes 25 357 14-S) ■ |
| 11 | 24 018 09-S | 1 | Retainer-Ring ■ |
| 12 | M-931010-S | 1 | Washer-Flat (9MM) ■ |
| 13 | 28 032 09-S | 1 | Seal-Cross Shaft, Governor ■ |
| 14 | 24 468 15-S | 1 | Washer-Flat (11/32) ■ |
| 15 | 24 144 38-S | 1 | Shaft-Cross, Governor ■ |
| 16 | 52 139 09-S | 1 | Plug-Cup ■ |
| | 25 357 14-S | 1 | Lubricant-Camshaft ■ ● |

● Not illustrated

■ Obtain parts from www.kohlerplus.com

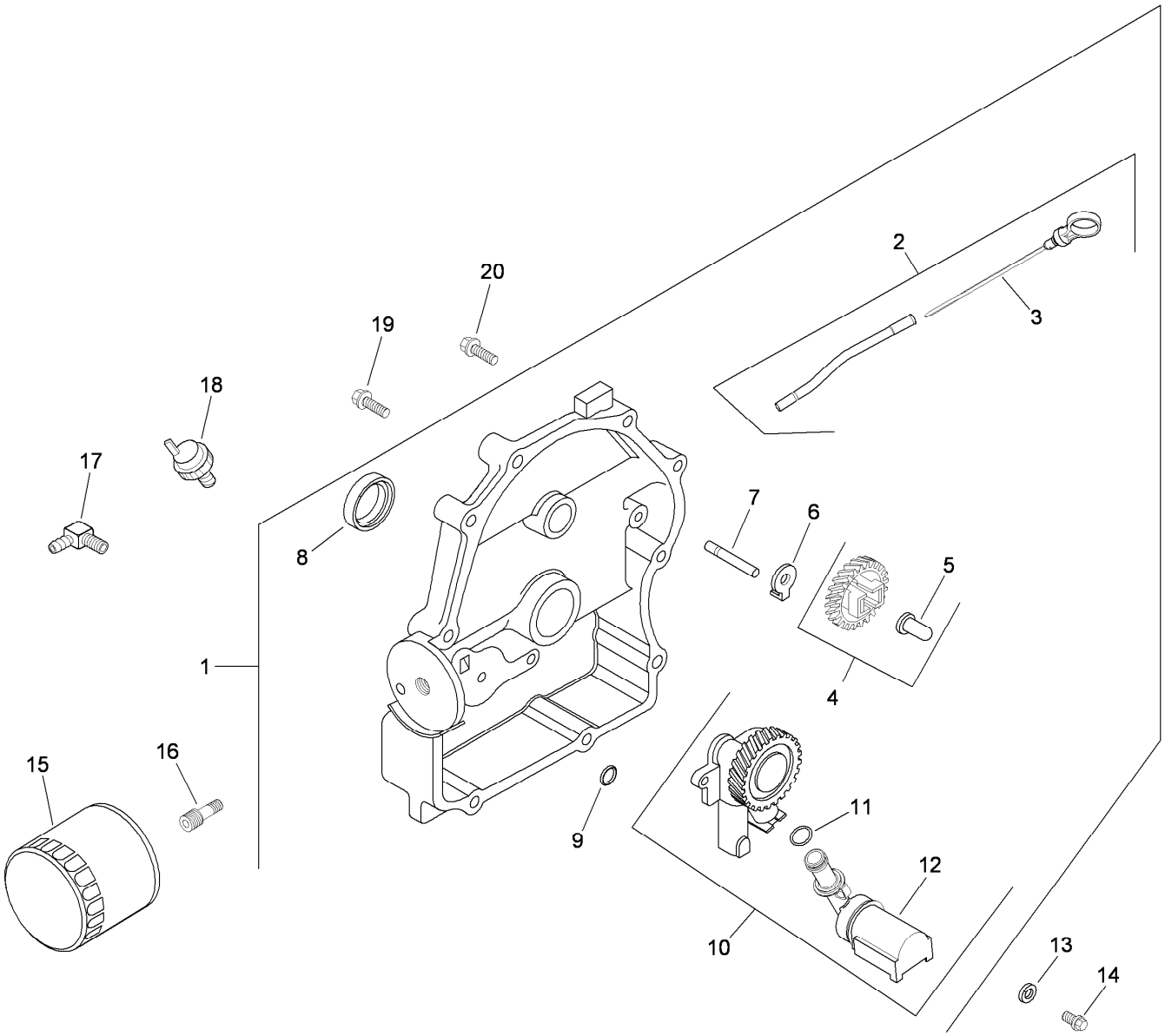


# Oil Pan and Lubrication Assembly
# Kohler CH680-3015

| Ref. | Part Number | Qty. | Description |
|---|---|---|---|
| 1 | 24 009 82-S | 1 | Closure Plate Kit (Includes Ref 2-12) ● |
| 2 | 24 755 121-S | 1 | Dipstick And Dipstick Tube ASM (Includes Ref 3) ● |
| 3 | 24 038 10-S | 1 | Dipstick ● |
| 4 | 24 043 12-S | 1 | Governor Gear W/Pin Kit (Includes Ref 5) ● |
| 5 | 12 380 01-S | 1 | Pin-Regulating, Governor ● |
| 6 | 52 448 02-S | 1 | Tab-Locking ● |
| 7 | 12 144 02-S | 1 | Shaft-Gear, Governor ● |
| 8 | 52 032 08-S | 1 | Seal-Oil (P-T-O End) ● |
| 9 | 24 153 08-S | 2 | O-Ring ● |
| 10 | 24 393 10-S | 1 | Oil Pump ASM (Includes Ref 11, 12) ● |

| Ref. | Part Number | Qty. | Description |
|---|---|---|---|
| 11 | 24 153 01-S | 1 | O-Ring (Oil Pick up) ● |
| 12 | 24 381 04-S | 1 | Tube-Pick Up, Oil ● |
| 13 | M-631005-S | 2 | Washer-Flat (6 MM) ● |
| 14 | M-645025-S | 2 | Screw-Flange, Thread Forming (M6X1.0X25) ● |
| 15 | 52 050 02-S | 1 | Filter-Oil ● |
| 16 | 24 136 01-S | 1 | Nipple-Filter, Oil ● |
| 17 | 25 155 02-S | 1 | Connector-Hose, 90 Deg ● |
| 18 | 24 099 03-S | 1 | Switch-Pressure, Oil ● |
| 19 | 24 086 16-S | 9 | Screw-HF (M8X1.25X45) ● |
| 20 | 24 086 17-S | 1 | Screw-Flange (M8X1.25X45) ● |

● Obtain parts from www.kohlerplus.com

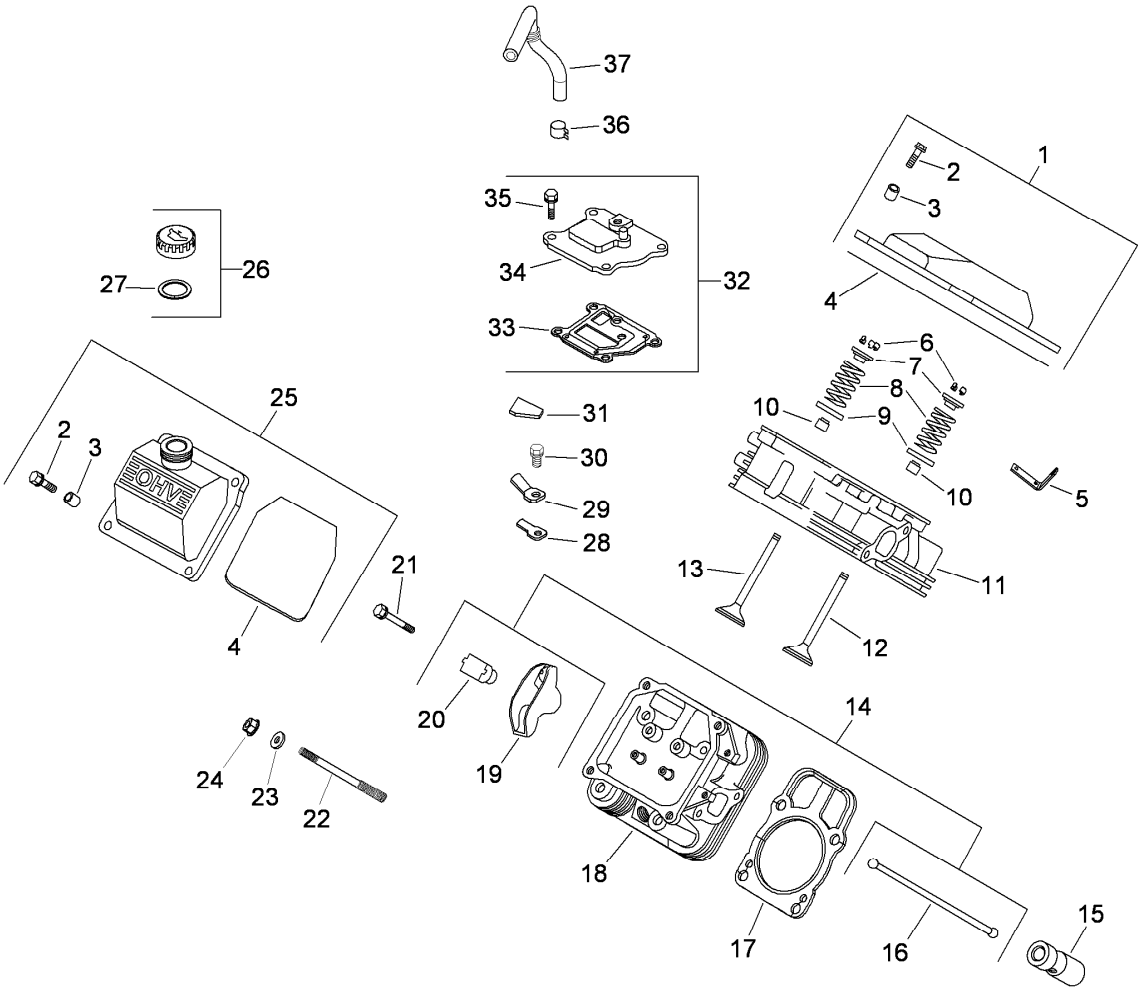


# Head and Valve and Breather Assembly
# Kohler CH680-3015

| Ref. | Part Number | Qty. | Description |
|---|---|---|---|
| 1 | 24 755 74-S | 1 | Plain Valve Cover Kit (Includes Ref 2-4) ● |
| 2 | M-651030-S | 4 | Screw-Flange (M6X1.0X30) ● |
| 3 | 24 112 08-S | 4 | Spacer ● |
| 4 | 24 153 23-S | 1 | O-Ring ● |
| 5 | 24 445 01-S | 1 | Strap-Lifting ● |
| 6 | 12 755 03-S | 4 | Retainer Kit ● |
| 7 | 12 173 01-S | 4 | Cap-Spring, Valve ● |
| 8 | 24 089 02-S | 4 | Spring-Valve ● |
| 9 | 235011-S | 4 | Retainer-Spring ● |
| 10 | 66 032 05-S | 2 | Seal-Stem, Valve ● |
| 11 | 24 318 68-S | 1 | No. 1 Cylinder Head ASM ● |
| 12 | 24 017 01-S | 2 | Valve-Intake (STD) ● |
| 12 | 24 017 02-S | 2 | Valve-Intake (.25) ● |
| 13 | 24 016 01-S | 2 | Valve-Exhaust (STD) ● |
| 13 | 24 016 02-S | 2 | Valve-Exhaust (.25) ● |
| 14 | 24 755 66-S | 1 | Valve Train Kit (Includes Ref 16, 19, 20) ● |
| 15 | 25 351 01-S | 4 | Lifter-Valve ● |
| 16 | 24 411 05-S | 4 | Rod-Push ● |
| 17 | 24 041 40-S | 2 | Gasket-Cylinder Head ● |
| 18 | 24 318 71-S | 1 | No. 2 Cylinder Head ASM ● |
| 19 | 25 186 01-S | 4 | Arm-Rocker ● |
| 20 | 24 599 01-S | 4 | Pivot-Arm, Rocker ● |
| 21 | M-640034-S | 8 | Screw-Flange (M6X1.0X34) ● |
| 22 | 24 072 09-S | 8 | Stud (M8X1.25Xm10X1.5X105MM) (Cylinder Head) ● |
| 23 | 24 468 16-S | 8 | Washer-Flat (8.6 MM) ● |
| 24 | 24 100 10-S | 8 | Nut-Flange (M8X1.25) ● |
| 25 | 24 755 75-S | 1 | Oil Fill Valve Cover Kit (Includes Ref 2-4) ● |
| 26 | 24 755 46-S | 1 | Oil Fill Cap Kit (Yellow) (Includes Ref 27) ● |
| 27 | 25 153 02-S | 1 | O-Ring (Oil Fill Cap) ● |
| 28 | 24 402 03-S | 1 | Reed-Breather ● |
| 29 | 12 018 01-S | 1 | Retainer-Reed, Breather ● |
| 30 | M-545010-S | 1 | Screw-HHFTF (M5X.80X10) ● |
| 31 | 24 050 01-S | 1 | Filter-Breather ● |
| 32 | 24 033 01-S | 1 | Breather ASM (Includes Ref 33-35) ● |
| 33 | 24 041 23-S | 1 | Gasket-Breather ● |
| 34 | 24 096 86-S | 1 | Cover-Breather ● |

● Obtain parts from www.kohlerplus.com

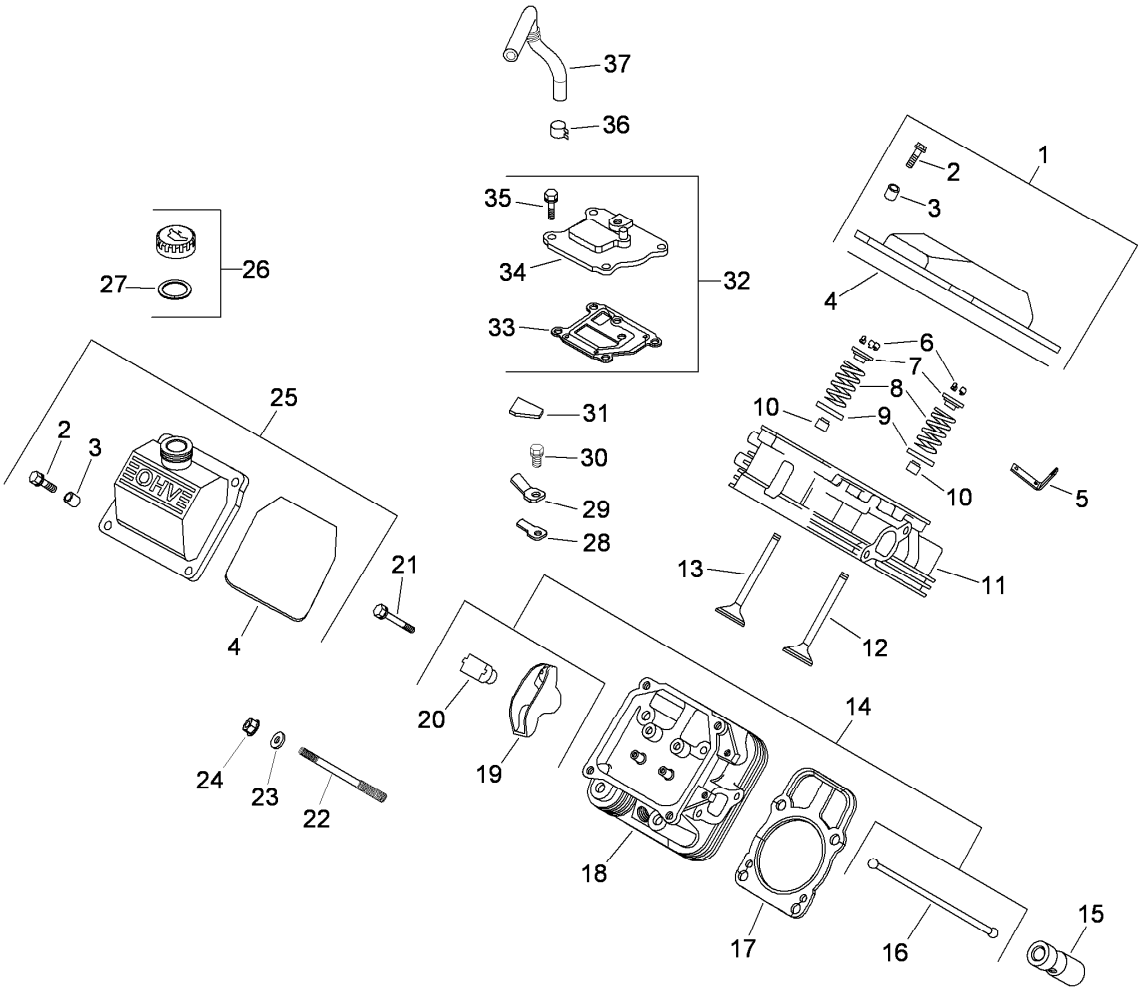


# Head and Valve and Breather Assembly Kohler CH680-3015 (continued)

| Ref. | Part Number | Qty. | Description |
|---|---|---|---|
| 35 | M-645020-S | 4 | Screw-HHFTF (M6X1.0X20) ● |
| 36 | 25 237 08-S | 2 | Clamp-Hose ● |
| 37 | 24 326 31-S | 1 | Hose-Breather ● |

● Obtain parts from www.kohlerplus.com

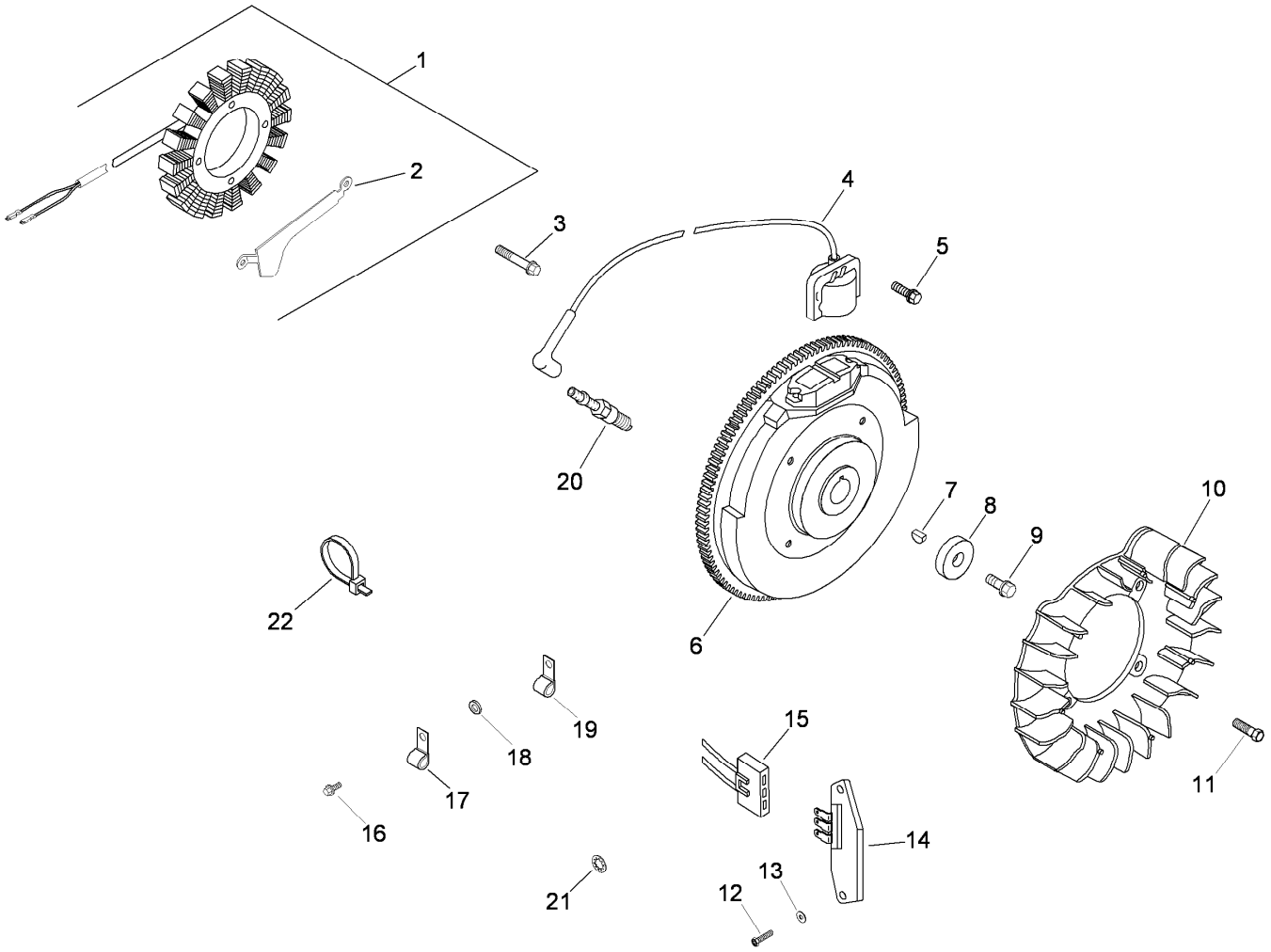


# Ignition and Electrical Assembly
# Kohler CH680-3015

| Ref. | Part Number | Qty. | Description |
|---|---|---|---|
| 1 | 54 755 09-S | 1 | 15 Amp Stator Kit (Includes Ref 2) ■ |
| 2 | 24 126 71-S | 1 | Bracket-Wire, Stator ■ |
| 3 | M-548025-S | 2 | Screw-Thread Forming (M5X0.8X25) ■ |
| 4 | 24 584 01-S | 2 | Module-Ignition ■ |
| 5 | M-545020-S | 4 | Screw-Flange, Thread Forming (M5X.8X20) ■ |
| 6 | 24 025 01-S | 1 | Flywheel ■ |
| 7 | X-42-15-S | 1 | Key (3/16 X 5/8) ■ |
| 8 | 12 468 03-S | 1 | Washer-Flat (13/32) ■ |
| 9 | 12 086 14-S | 1 | Screw-Flange (M10X1.5X45) ■ |
| 10 | 24 157 07-S | 1 | Fan ■ |
| 11 | 25 086 47-S | 4 | Bolt-Shoulder (M6X1.0X16) ■ |
| 12 | 24 086 18-S | 2 | Screw-Phl HD (11-16X.88) ■ |
| 13 | X-25-92-S | 2 | Washer-Flat (.188) ■ |
| 14 | 25 403 03-S | 1 | Rectifier-Regulator, 15 Amp ■ |
| 15 | 236602-S | 1 | Connector (3 Contact) ■ |
| 16 | 25 086 91-S | 2 | Screw-Wsh HD Tap (8-18X.50) ■ |
| 17 | 235173-S | 1 | Clip-Cable (B+ Lead) ■ |
| 18 | X-25-63-S | 1 | Washer-Flat (1/4) ■ |
| 19 | 48 154 02-S | 1 | Clip-Cable (Clamps Wires To Intake Manifold) ■ |
| 20 | 25 132 14-S | 2 | Spark Plug (R F I) ■ |
| 21 | X-22-11-S | 1 | Washer-Lock, Internal Tooth (1/4) ■ |
| 22 | 25 454 03-S | 2 | Tie-Wire ■ |

● Not illustrated

■ Obtain parts from www.kohlerplus.com

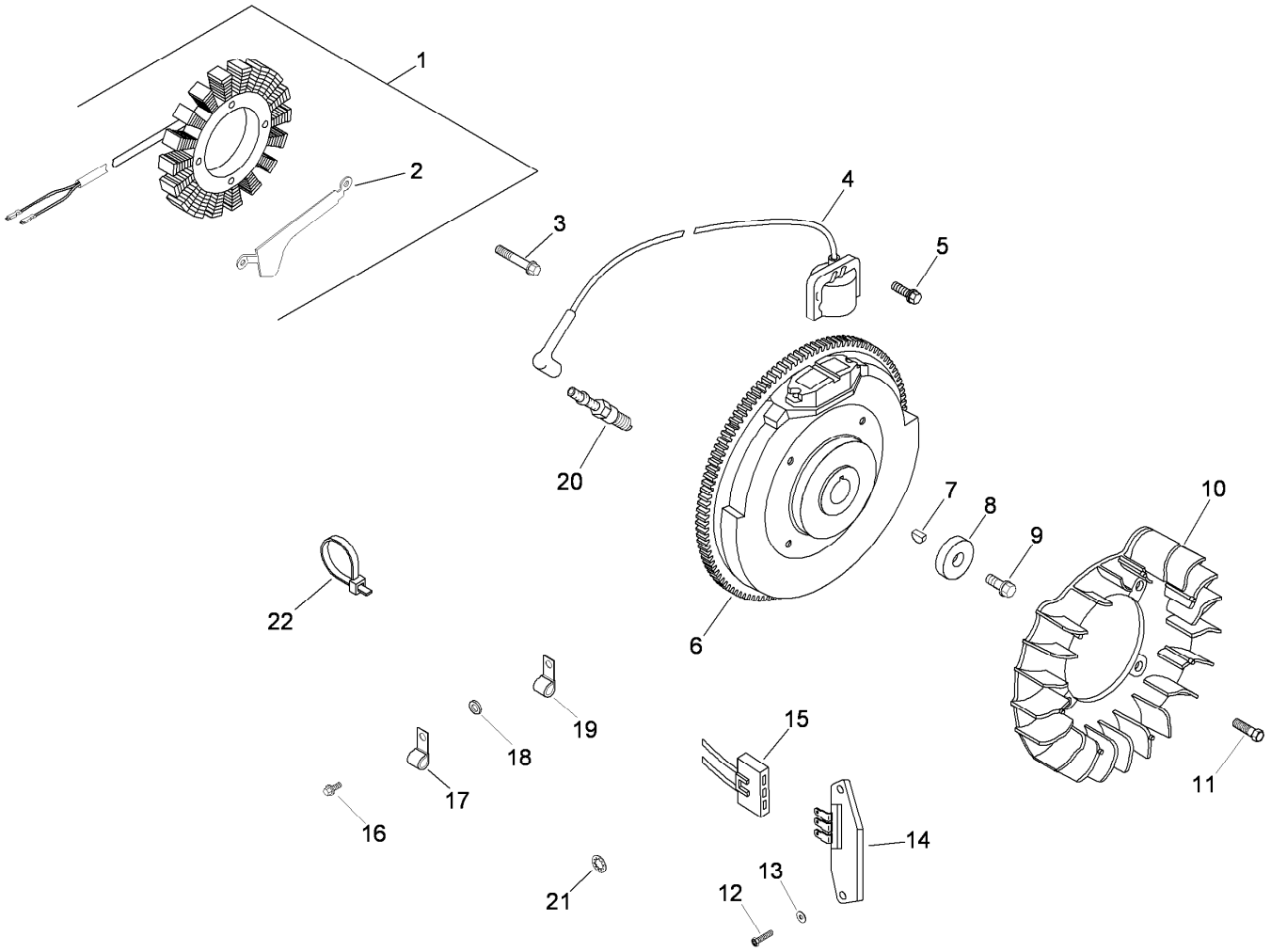


# Ignition and Electrical Assembly Kohler CH680-3015 (continued)

| Ref. | Part Number | Qty. | Description |
|---|---|---|---|
| | 24 176 08-S | 1 | Harness-Wiring ■● |
| | 24 518 12-S | 1 | Lead-Black (5-12 Insulated Grip Barrel Eyelet Terminals) ■● |

● Not illustrated

■ Obtain parts from www.kohlerplus.com

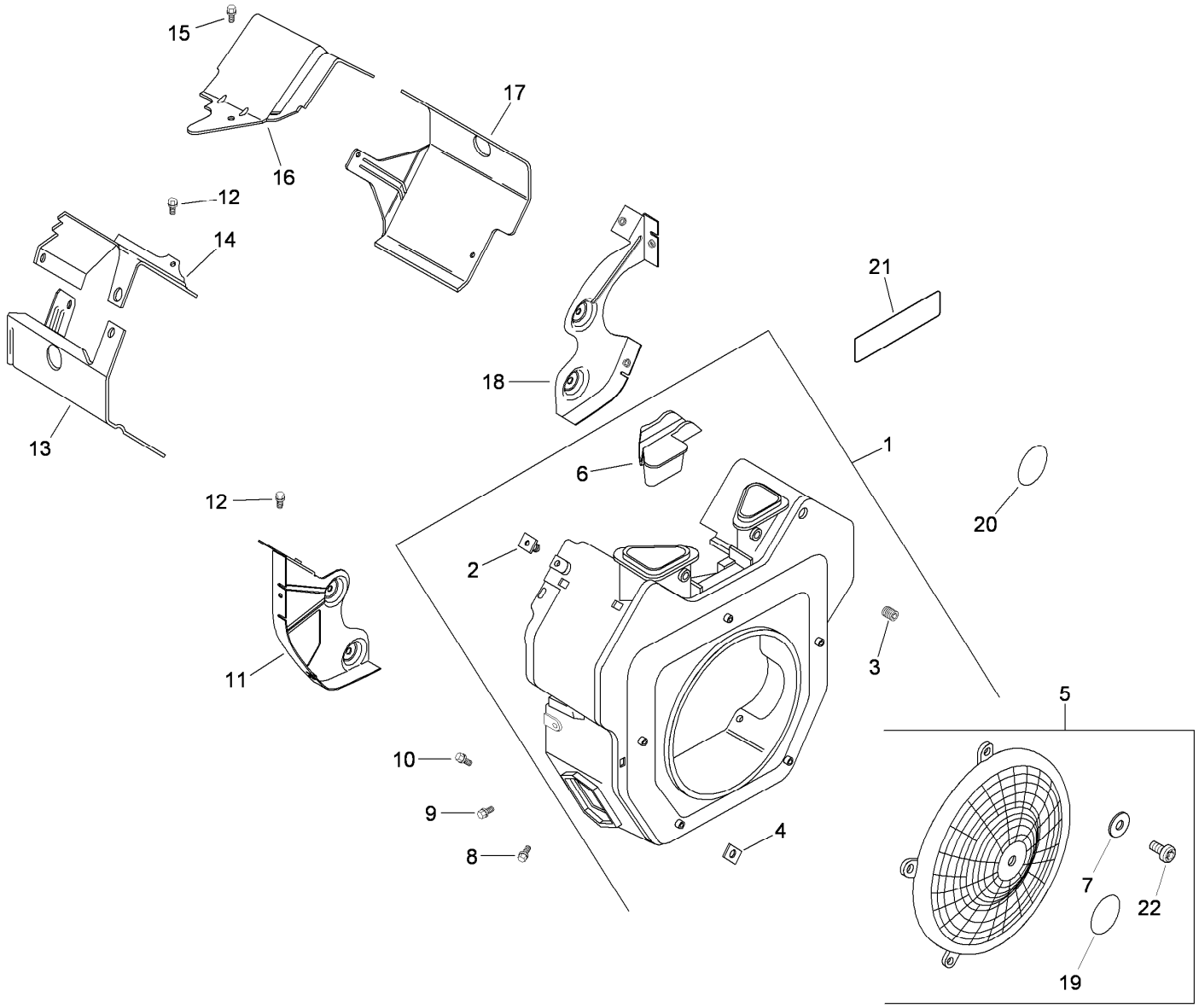


# Blower Housing Assembly
# Kohler CH680-3015

| Ref. | Part Number | Qty. | Description |
|---|---|---|---|
| 1 | 24 027 196-S | 1 | Blower Housing ASM (Includes Ref 2-4, 6) ● |
| 2 | 24 100 02-S | 2 | Nut-Plastic ● |
| 3 | 25 086 43-S | 1 | Screw-Set (10-24X.25) ● |
| 4 | 24 100 01-S | 3 | Nut-Plastic ● |
| 5 | 24 755 81-S | 1 | Fixed Guard Kit (Includes Ref 7, 19, 22) ● |
| 6 | 24 096 85-S | 1 | Cover-Housing, Blower ● |
| 7 | 24 332 01-S | 5 | Insert-Threaded ● |
| 8 | M-551016-S | 1 | Screw-Hex Flange, Heavy (M5X0.8X16) ● |
| 9 | M-545016-S | 3 | Screw-Flange, Thread Forming (M5X0.8X16) ● |
| 10 | M-545020-S | 4 | Screw-Flange, Thread Forming (M5X.8X20) ● |
| 11 | 24 146 16-S | 1 | Plate-Backing (No. 2 Side) ● |
| 12 | M-645016-S | 10 | Screw-Flange, Thread Forming (M6X1.0X16) ● |
| 13 | 24 063 20-S | 1 | Baffle-Barrel, Cylinder (No. 2 Side) ● |
| 14 | 24 063 17-S | 1 | Baffle-Valley (No. 2 Side) ● |
| 15 | M-545010-S | 2 | Screw-HHFTF (M5X.80X10) ● |
| 16 | 24 063 59-S | 1 | Baffle-Valley (No. 1 Side) ● |
| 17 | 24 063 58-S | 1 | Baffle-Barrel, Cylinder (No. 1 Side) ● |
| 18 | 24 146 20-S | 1 | Plate-Backing (No. 1 Side) ● |
| 19 | 24 113 18-S | 1 | Decal-Screen, Grass ● |
| 20 | 25 113 24-S | 1 | Decal-Screen, Grass ● |
| 21 | 24 113 96-S | 1 | Decal-22HP ● |
| 22 | 25 086 160-S | 5 | Screw-Sems ● |

● Obtain parts from www.kohlerplus.com

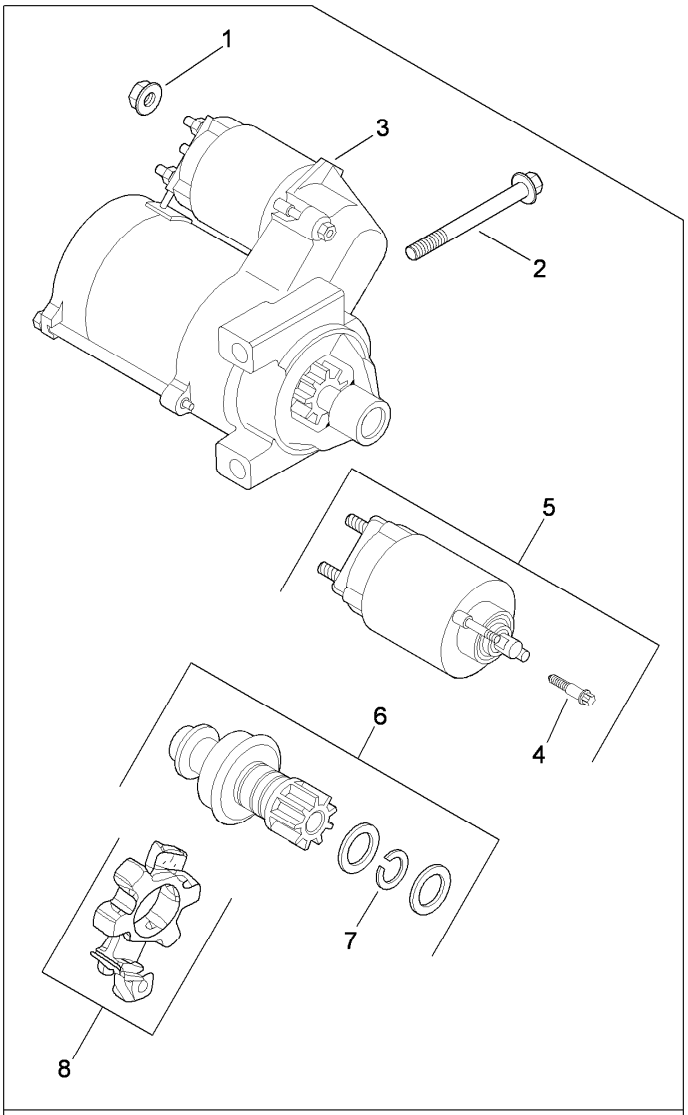


25 098 09-S (Delco)

# Starter Assembly
# Kohler CH680-3015

| Ref. | Part Number | Qty. | Description |
|---|---|---|---|
| 1 | M-841080-S | 1 | Nut-Flange (M8X1.25) ● |
| 2 | M-839080-S | 2 | Screw-Flg (M8X1.25X80) ● |
| 3 | 25 098 09-S | 1 | Starter ASM (Solenoid Shift) (Includes Ref 4-8) ● |
| 4 | 25 086 113 | 3 | Screw-External Torx Head ● |
| 5 | 25 435 05-S | 1 | Solenoid Kit (Includes Ref 4) ● |
| 6 | 25 755 33-S | 1 | Pinion Drive Kit (Includes Ref 7) ● |
| 7 | 25 141 05-S | 1 | Ring-Retaining ● |
| 8 | 25 221 01-S | 1 | Brush Holder Kit ● |

● Obtain parts from www.kohlerplus.com

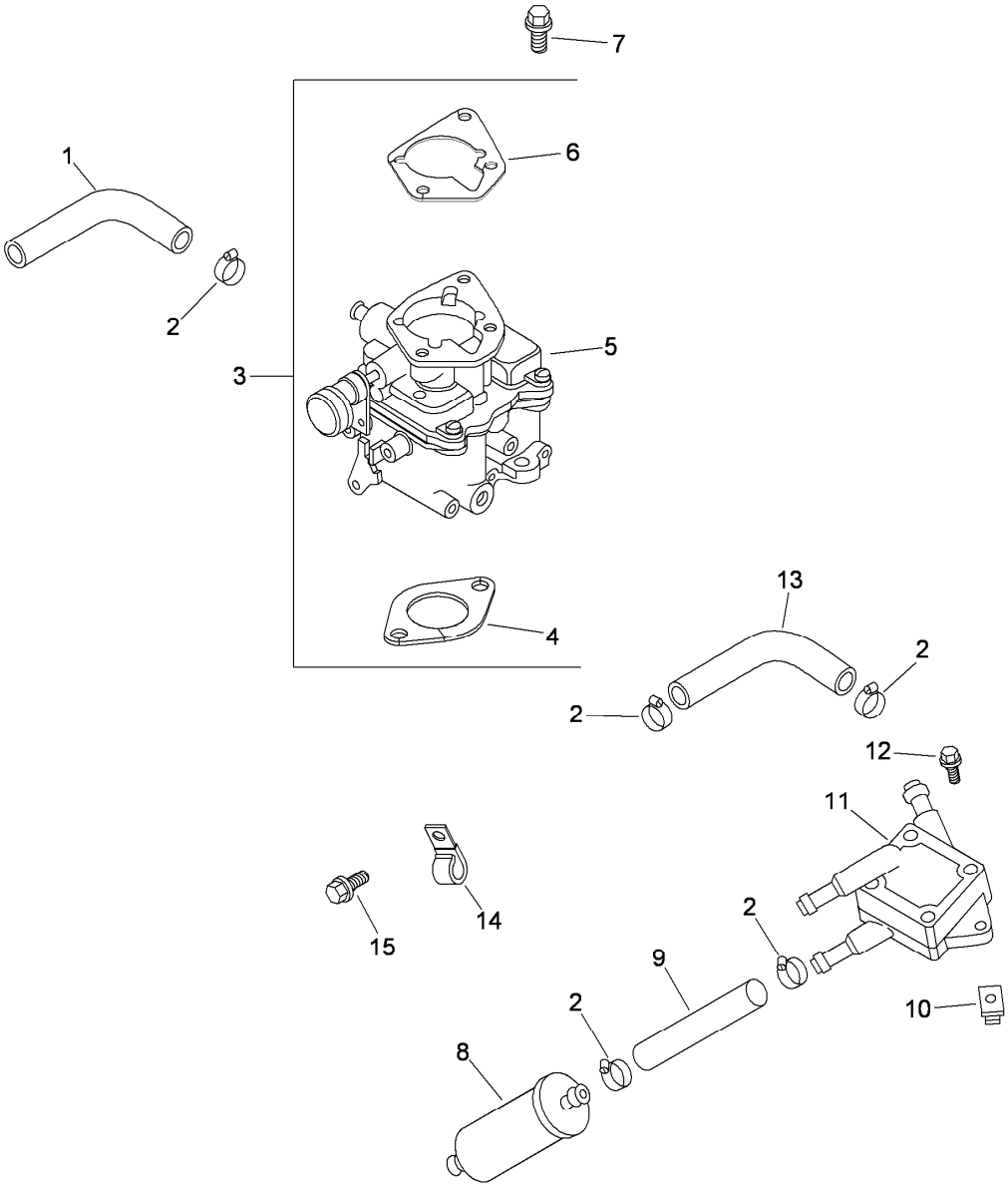


# Fuel System Assembly
# Kohler CH680-3015

| Ref. | Part Number | Qty. | Description |
|---|---|---|---|
| 1 | 25 353 32-S | 1 | Line-Fuel (9.5) ■ |
| 2 | 25 237 14-S | 6 | Clamp-Hose, Spring (1/2) ■ |
| 3 | 24 853 59-S | 1 | Carburetor Kit (Includes Ref 4-6) ■ |
| 4 | 24 041 17-S | 1 | Gasket-Carburetor ■ |
| 5 | 24 053 59 | 1 | Carburetor ASM ■ |
| 6 | 24 041 06-S | 1 | Gasket-Base, Air Cleaner ■ |
| 7 | M-651030-S | 2 | Screw-Flange (M6X1.0X30) ■ |
| 8 | 24 050 02-S | 1 | Filter-Fuel ■ |
| 9 | 25 353 15-S | 1 | Line-Fuel (3.5) ■ |
| 10 | 24 100 01-S | 2 | Nut-Plastic ■ |

| Ref. | Part Number | Qty. | Description |
|---|---|---|---|
| 11 | 24 393 16-S | 1 | Pump-Fuel ■ |
| 12 | 24 086 12-S | 2 | Screw-TAP (M6X1.7X18) ■ |
| 13 | 24 353 02-S | 1 | Line-Fuel, Flexible (15.5) ■ |
| 14 | M-650012-S | 1 | Screw-HF (M6X1.0X12) ■ |
| 15 | 47 154 01-S | 1 | Clip-Cable ■ |
| | 24 757 01-S | 1 | Solenoid Repair Kit ■ ● |
| | 24 757 02-S | 1 | Float Repair Kit ■ ● |
| | 24 757 03-S | 1 | Carburetor Repair Kit ■ ● |
| | 24 757 07-S | 1 | Choke Repair Kit ■ ● |
| | 24 757 125-S | 1 | High Altitude Kit With Gaskets ■ ● |

● Not illustrated

■ Obtain parts from www.kohlerplus.com

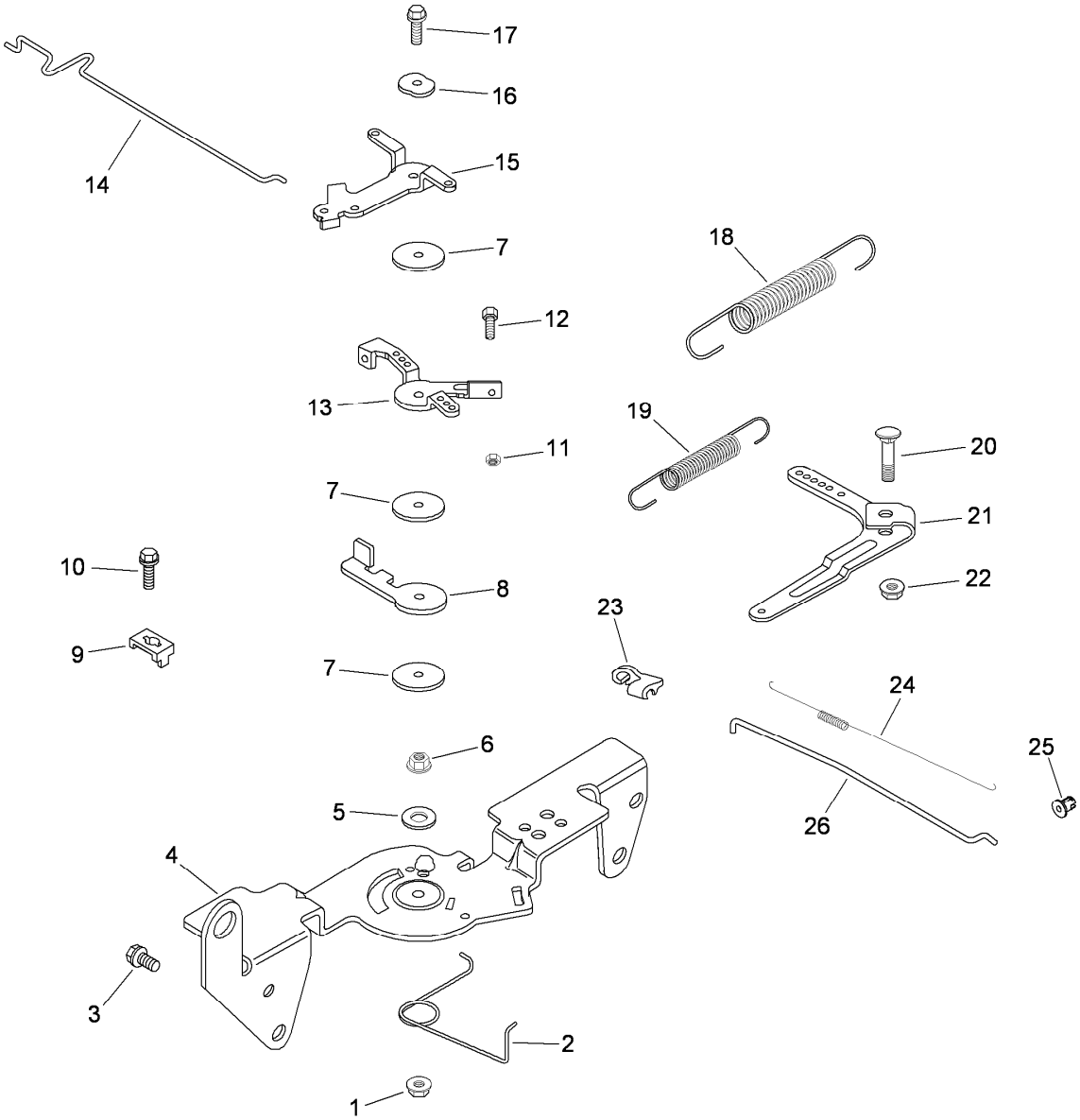


# Engine Control Assembly
# Kohler CH680-3015

| Ref. | Part Number | Qty. | Description |
|---|---|---|---|
| 1 | M-547050-S | 1 | Nut-Lock (M5X.8) ● |
| 2 | 24 089 03-S | 1 | Spring-Return, Choke ● |
| 3 | M-645016-S | 4 | Screw-Flange, Thread Forming (M6X1.0X16) ● |
| 4 | 24 126 56-S | 1 | Bracket-Control ● |
| 5 | X-20-1-S | 1 | Washer-Lock (.25) ● |
| 6 | M-541050-S | 1 | Nut-HF (M5X0.8) ● |
| 7 | 24 468 01-S | 3 | Washer-Flat (5.5MM) ● |
| 8 | 24 090 07-S | 1 | Lever-Actuator, Throttle ● |
| 9 | 12 237 01-S | 2 | Clamp-Cable ● |
| 10 | M-545016-S | 3 | Screw-Flange, Thread Forming (M5X0.8X16) ● |
| 11 | M-446030-S | 1 | Nut (M4X0.7) ● |
| 12 | M-401030-S | 1 | Screw (M4X0.7X30) ● |
| 13 | 24 090 03-S | 1 | Lever-Control, Throttle ● |
| 14 | 24 079 21-S | 1 | Linkage-Choke ● |
| 15 | 24 090 05-S | 1 | Lever-Choke ● |
| 16 | 41 468 03-S | 1 | Washer-Spring (1/4) ● |
| 17 | M-545020-S | 1 | Screw-Flange, Thread Forming (M5X.8X20) ● |
| 18 | 24 089 51-S | 1 | Spring-Limiter, Throttle ● |
| 19 | 24 089 46-S | 1 | Spring-Governor ● |
| 20 | 24 211 03-S | 1 | Bolt-Sq Neck, Rd HD (M6X1.0X25) ● |
| 21 | 24 090 33-S | 1 | Lever-Governor ● |
| 22 | M-641060-S | 1 | Nut-Flange (M6X1.0) ● |
| 23 | 25 158 11-S | 1 | Bushing-Retaining, Linkage ● |
| 24 | 24 089 01-S | 1 | Spring-Linkage ● |
| 25 | 25 158 08-S | 1 | Bushing-Linkage, Throttle ● |
| 26 | 24 079 01-S | 1 | Linkage-Throttle ● |

● Obtain parts from www.kohlerplus.com

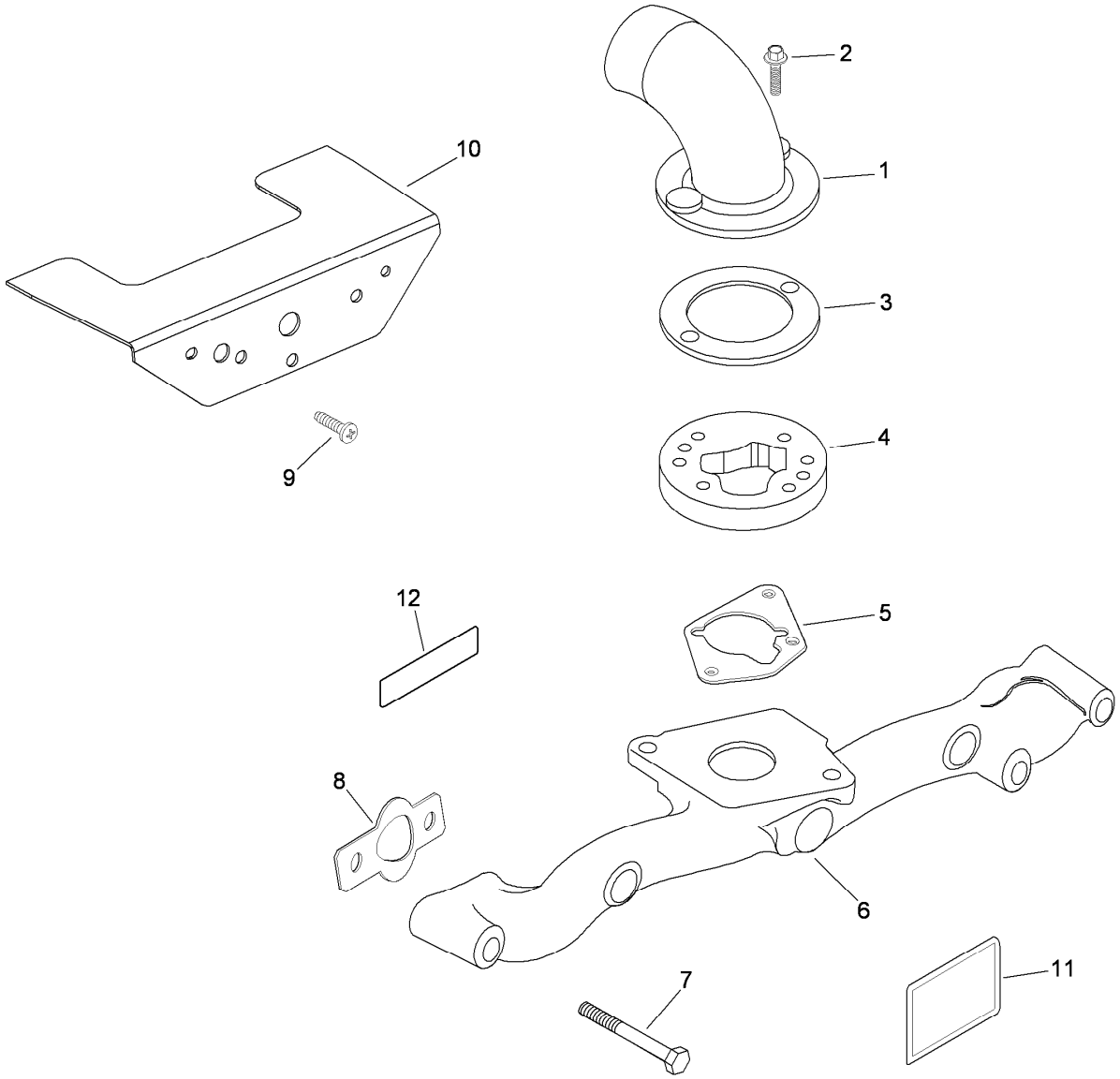


# Air Intake and Filtration Assembly
# Kohler CH680-3015

| Ref. | Part Number | Qty. | Description |
|---|---|---|---|
| 1 | 24 029 21-S | 1 | Adapter-Cleaner, Air ● |
| 2 | M-639016-S | 6 | Screw-HF (M6X1.0X16) ● |
| 3 | 24 041 34-S | 1 | Gasket-Adapter ● |
| 4 | 24 029 31-S | 1 | Adapter ● |
| 5 | 24 041 06-S | 1 | Gasket-Base, Air Cleaner ● |
| 6 | 24 164 14-S | 1 | Manifold-Intake ● |
| 7 | 25 086 84-S | 4 | Screw-HF (M6X1.0X55) ● |
| 8 | 24 041 01-S | 2 | Gasket-Manifold, Intake ● |
| 9 | 24 086 06-S | 2 | Screw-PPH (11-16X3/4) ● |
| 10 | 24 314 25-S | 1 | Shield-Debris ● |
| 11 | 25 113 27-S | 1 | Decal-Cleaner, Air ● |
| 12 | 24 146 25-S | 1 | Decal-22HP ● |

● Obtain parts from www.kohlerplus.com

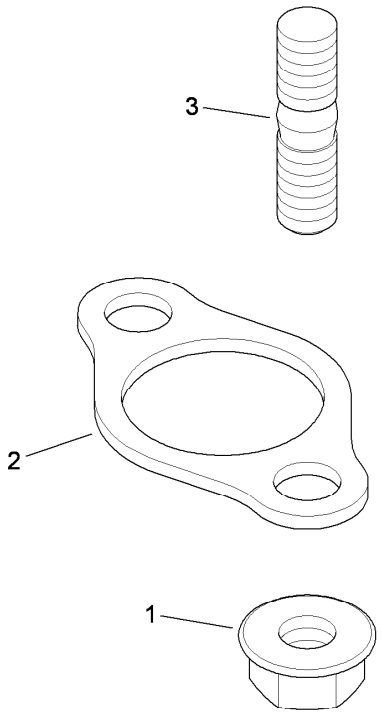


# Exhaust Assembly
# Kohler CH680-3015

| Ref. | Part Number | Qty. | Description |
|---|---|---|---|
| 1 | M-841080-S | 4 | Nut-Flange (M8X1.25) ■ |
| 2 | 24 041 49-S | 2 | Gasket-Exhaust ■ |
| 3 | 25 072 04-S | 4 | Stud (M8X1.25X33) ■ |

● Not illustrated

■ Obtain parts from www.kohlerplus.com

# Attachments and Accessories

## For 22318 323 Compact Utility Loader

| Product Name | Model/Part |
|---|---|
| Tire Chain Kit | 100-4140 |
| Helmet-Face Shield | 100-4143 |
| Light Kit | 100-8940 |
| Narrow Tire ASM | 104-0572 |
| Tube-Tire (18 x 8.50-10) | 105-4070 |
| Rubber Foot Mat | 105-5805 |
| Tube-Tire (18 X 8.50-8) | 106396 |
| CE Conversion Kit | 22366 |
| 4 Cubic Foot Standard Bucket | 22409 |
| Loose Materials Bucket | 22410 |
| 48in Hydraulic Blade | 22414 |
| Rotary Broom | 22415 |
| Counterweight | 22417 |
| Bore Drive Head | 22420 |
| Rod and Reamer | 22421 |
| Multi-Purpose Tool | 22423 |
| Power Box Rake | 22425 |
| Stump Grinder | 22429 |
| Tree Forks | 22438 |
| Cement Bowl | 22442 |
| The Eliminator Scarifier/Groomer | 22443 |
| 40in Tiller | 22445 |
| Snowthrower | 22456 |
| Trencher Head | 22470 |
| High-Speed Trencher Head | 22471 |
| Narrow Bucket | 22520 |
| Over-the-Tire Rubber Tracks | 22662 |
| Auger Head | 22802 |
| Universal Swivel Auger Head | 22803 |
| Vibratory Plow | 22911 |
| Soil Cultivator | 23101 |
| Seeder Box Kit, Soil Cultivator | 23120 |
| Concrete Breaker | 23135 |
| Backhoe | 23163 |
| Adjustable Forks | 23164 |
| Leveler | 23165 |
| Tube | 232-37 |
| LH Wheel And Tire ASM | 98-2747 |
| Wheel and Tire ASM | 98-4709 |
| Spark Arrestor | 98-9099 |
| RH Wheel And Tire ASM | 99-1447 |
| RH Wheel And Tire ASM (Powerlug) | 99-3140 |
| LH Wheel And Tire ASM (Powerlug) | 99-3141 |
| Hydraulic Relief Valve Kit | 99-4360 |

TORO®

Count on it.