Form No. 3354-649 Rev C

TORO®

Count on it.

Parts Catalog

Dingo® 320-D

Compact Utility Loader

Model No. 22303—Serial No. 260000001 and Up

Register at www.Toro.com.
Original Instructions (EN)

3354-649 C

Ordering Replacement Parts

To order replacement parts, please supply the part number, the quantity, and the description of each part desired.

Understanding Reference Numbers

Each identified part in an illustration has a reference number. The reference number for a part also appears in the parts list, along with other information about the part.

This catalog uses two special reference number formats, one to indicate parts in a service assembly and another to indicate the quantity of a given part in an illustration.

Service Assembly Reference Numbers

Parts in service assemblies have reference numbers in the form a:b. The a represents the reference number of the entire service assembly and the b represents a sequential number unique to each part within the service assembly.

For example, a wheel assembly might be identified by reference number 6, the tire by 6:1, the valve by 6:2, and the wheel by 6:3. When you order the assembly identified by reference number 6, you receive all parts identified by reference numbers 6:1,6:2, and 6:3. However, you may also order any part individually. Reference numbers of this type appear in illustration and in parts lists.

Reference Numbers Indicating Quantity

In an illustration, if a reference number indicates more than one part, the reference number has the form nX y. The n represents the quantity of the part, the X is the multiplication symbol, and the y represents the reference number.

For example, in an illustration, the reference number 2X 37 means that two of the parts identified by reference number 37 are indicated.

Contents

Frame and Loader Arm Assembly . . . 4
Hood and Screen Assembly . . . 5
Wheel and Motor Assembly . . . 6
Hydraulic Motor Assembly No. 99-3052 . . . 7
Engine Assembly . . . 8
Engine Mounting Assembly . . . 10
Fuel Tank and Air Filter Assembly . . . 11
Air Cleaner Assembly No. 99-3160 . . . 12
Radiator Mount Assembly . . . 13
Hydraulic Tank and Filter Assembly . . . 14
Auxillary Control Lever Assembly . . . 15
Hydraulic Valve Assembly . . . 16
Auxiliary Hydraulic Valve Assembly No. 99-3077 . . . 17
Hydraulic Valve Assembly No. 104-4221 . . . 18
Hydraulic Selector Valve Assembly No. 99-3072 . . . 19
4-Spool Valve Assembly . . . 20
Four Spool Hydraulic Valve Assembly No. 105-8377 . . . 21
Hydraulic Motor Assembly . . . 22
Counterbalance Valve Assembly No. 99-3040 . . . 23
Hydraulic Cylinder Assembly . . . 24
Rear Cover Assembly . . . 25
Battery Mount Assembly . . . 26
Electrical Component Assembly . . . 27
Crankcase Assembly . . . 28
Oil Pan Assembly . . . 29
Cylinder Head Assembly . . . 30
Gear Case and Oil Filter Assembly . . . 31
Head Cover Assembly . . . 32
Dipstick and Guide Assembly . . . 33
Main Bearing Case Assembly . . . 34
Camshaft and Idle Gear Shaft Assembly . . . 35
Piston and Crankshaft Assembly . . . 36
Flywheel Assembly . . . 37
Fuel Camshaft and Governor Shaft Assembly . . . 38
Idle Apparatus Assembly . . . 39
Injection Pump Assembly . . . 40
Governor Assembly . . . 41
Speed Control Plate Assembly . . . 42
Nozzle Holder and Glow Plug Assembly . . . 43
Nozzle Holder Assembly . . . 44
Fuel Pump Installation Assembly . . . 46
Dynamo Pulley Assembly . . . 47
Dynamo Assembly . . . 48
Starter Installation Assembly . . . 49
Starter Assembly . . . 50
Oil Switch and Thermometer Assembly . . . 51
Water Flange and Thermostat Assembly . . . 52
Water Pump Assembly . . . 53
Water Pipe Assembly . . . 54
Valve and Rocker Arm Assembly . . . 55
Intake Manifold Assembly . . . 56
Exhaust Manifold Assembly . . . 57
Gasket Kit Assembly . . . 58
Attachments and Accessories . . . 59

© 2023—The Toro® Company

8111 Lyndale Avenue South
Bloomington, MN 55420

Contact us at www.Toro.com.
Printed in the USA.

All Rights Reserved

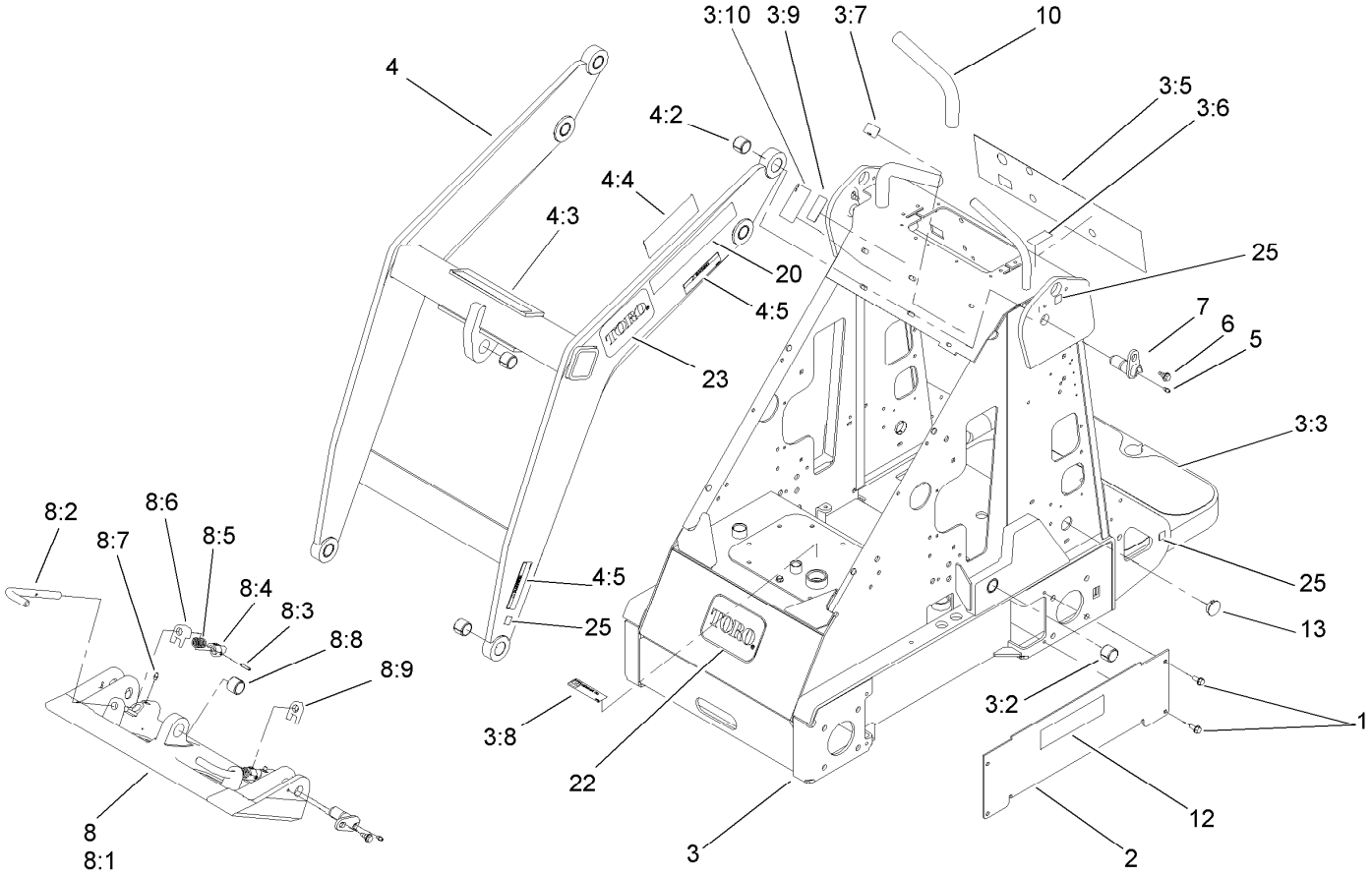

Frame and Loader Arm Assembly

Ref.	Part Number	Qty.	Description
1	32144-70	8	Screw-HWHTF
2	106-8178-01	2	Cover-Hose
3	106-8185	1	Frame ASM
3:2	98-4871	2	Bushing-Tension
3:3	98-9947	2	Tread-Foot
3:5	108-9732	1	Decal-Panel, Control
3:6	98-8219	1	Decal-Throttle
3:7	98-8220	1	Decal-Limiter, Speed
3:8	105-8432	1	Decal-Oil, HYD
3:9	98-8235	1	Decal-Selector
3:10	98-4677	1	Decal-Power, Auxiliary
4	106-8155	1	Loader ASM
4:2	98-4871	7	Bushing-Tension
4:3	98-4682	1	Decal-Caution
4:4	98-9051	1	Decal-Danger
4:5	100-6141	4	Decal-Pinch
5	302-5	4	Fitting-Grease
6	99-5105	4	Screw-Shoulder

Ref.	Part Number	Qty.	Description
7	99-1414	4	Pin-Pivot
8	105-8364	1	Quick Attach ASM
8:1	105-0245-03	1	Mount-Attach, Quick
8:2	105-8367	2	Pin-Locking
8:3	3285-1	2	Pin-Grooved
8:4	105-0246	2	Cam
8:5	98-4694	2	Spring-Compression
8:6	104-5909	1	Stop-RH
8:7	302-5	2	Fitting-Grease
8:8	98-4871	1	Bushing-Tension
8:9	104-5903	1	Stop-LH
10	98-4845	2	Grip-Cushion
12	105-8429	2	Decal
13	94-1402	2	Plug-Hole
20	105-8428	2	Decal
22	62-5550	1	Decal
23	93-7340	2	Decal
25	93-9084	6	Decal-Point, Lift

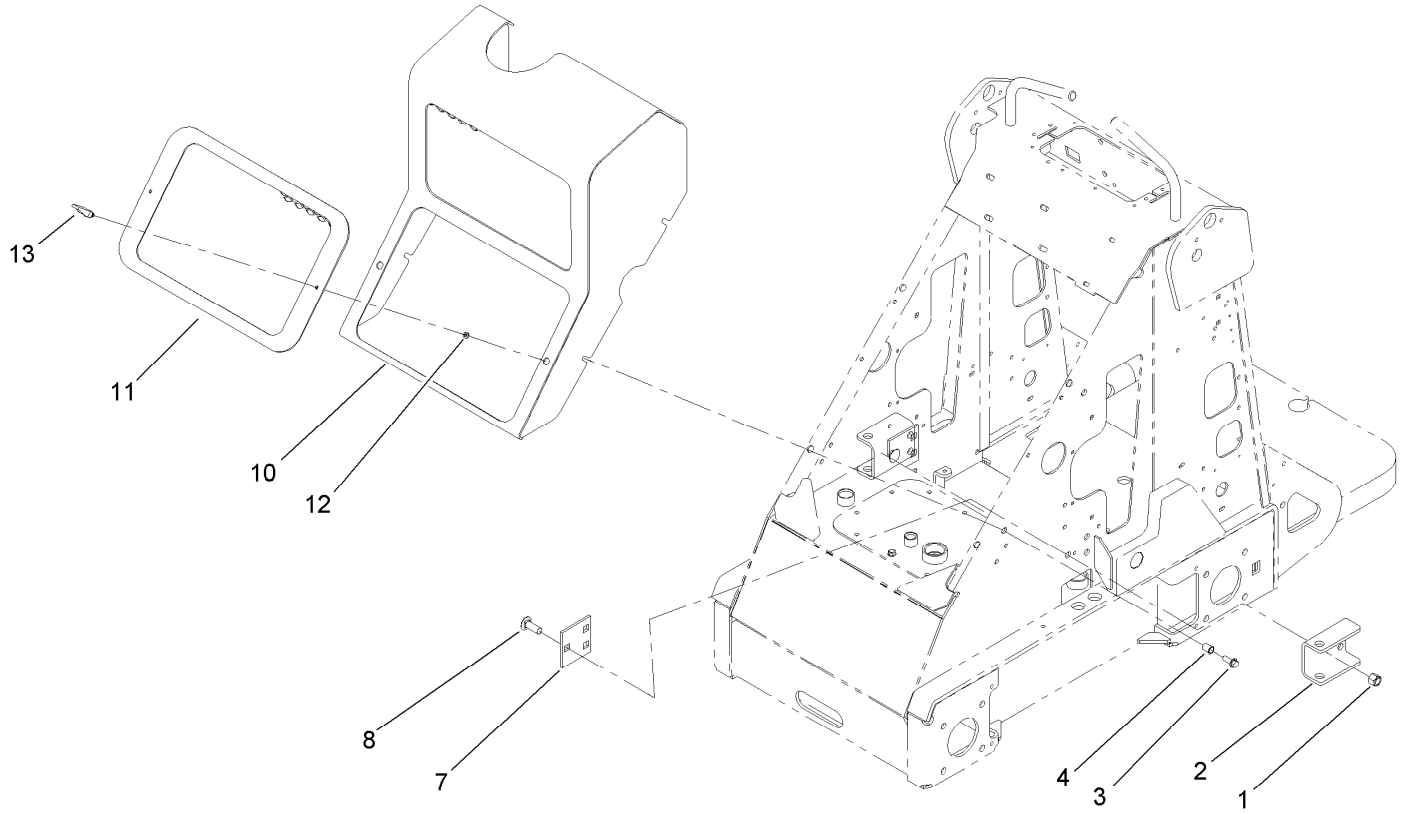

Hood and Screen Assembly

Ref.	*Part Number*	*Qty.*	*Description*
1	3296-23	6	Nut-Lock, NI
2	100-4122-01	2	Bracket-Anchor
3	3234-29	4	Screw-HHF
4	32148-8	4	Nut-Clinch
7	100-4116-01	2	Plate-Anchor
8	3233-26	6	Screw-CARR,Shortneck
10	99-3120-03	1	Hood
11	99-3118-03	1	Cover
12	99-3058	2	Washer
13	74-5950	2	Latch-Swell

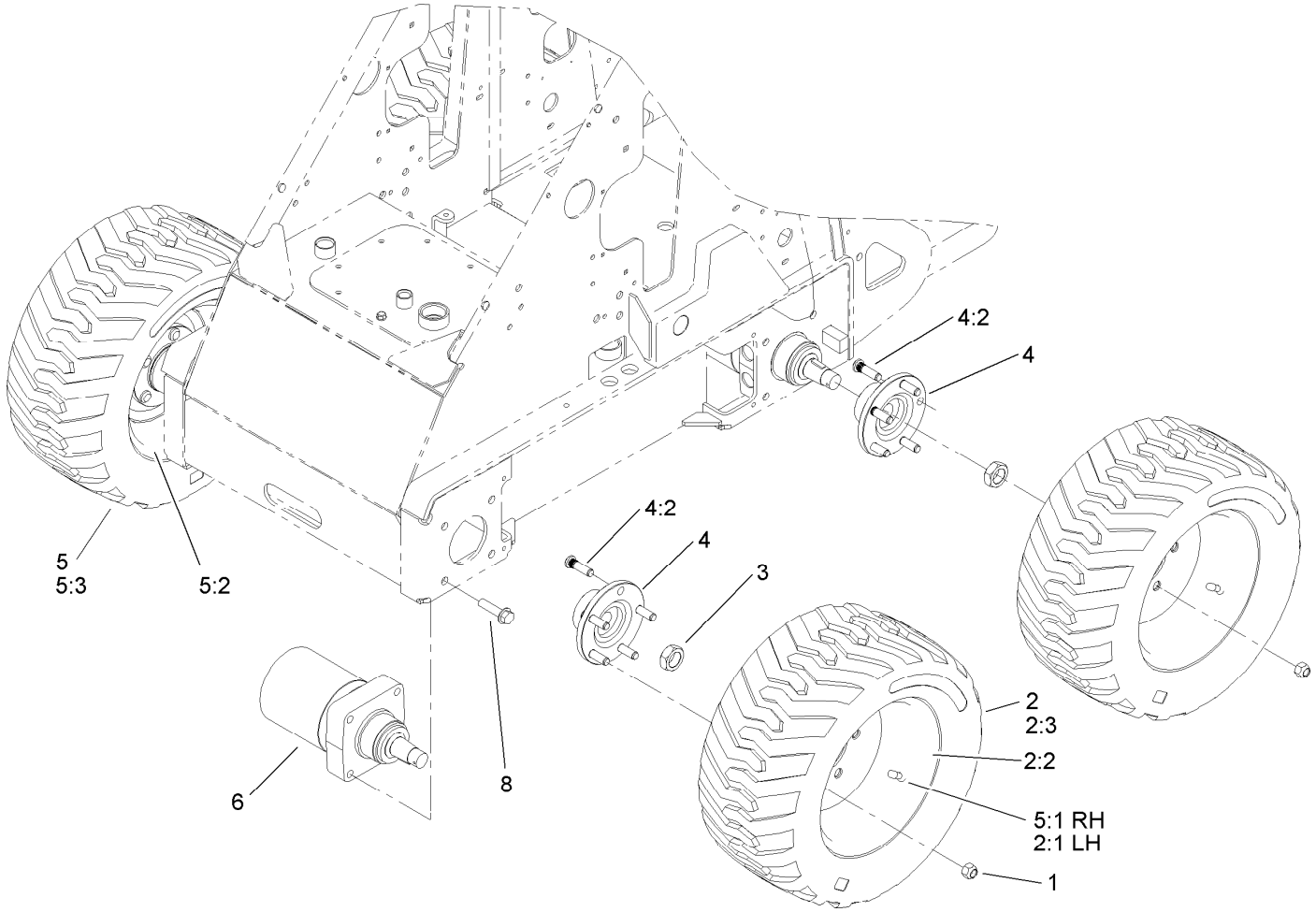

Wheel and Motor Assembly

Ref.	*Part Number*	*Qty.*	*Description*
1	242-50	20	Nut-Lug
2	98-2747	2	LH Wheel And Tire ASM
2:1	232-27	1	Stem-Valve
2:2	98-2748	1	Wheel
2:3	98-2749	1	Tire
3	106-8159	4	Nut-Lock
4	99-3064	4	Hub ASM
4:2	10-6830	5	Stud-Type, Drive
5	99-1447	2	RH Wheel And Tire ASM
5:1	232-27	1	Stem-Valve
5:2	98-2748	1	Wheel
5:3	98-2749	1	Tire
6	99-3052	4	HYD Motor ASM
8	3234-27	16	Screw-HHF

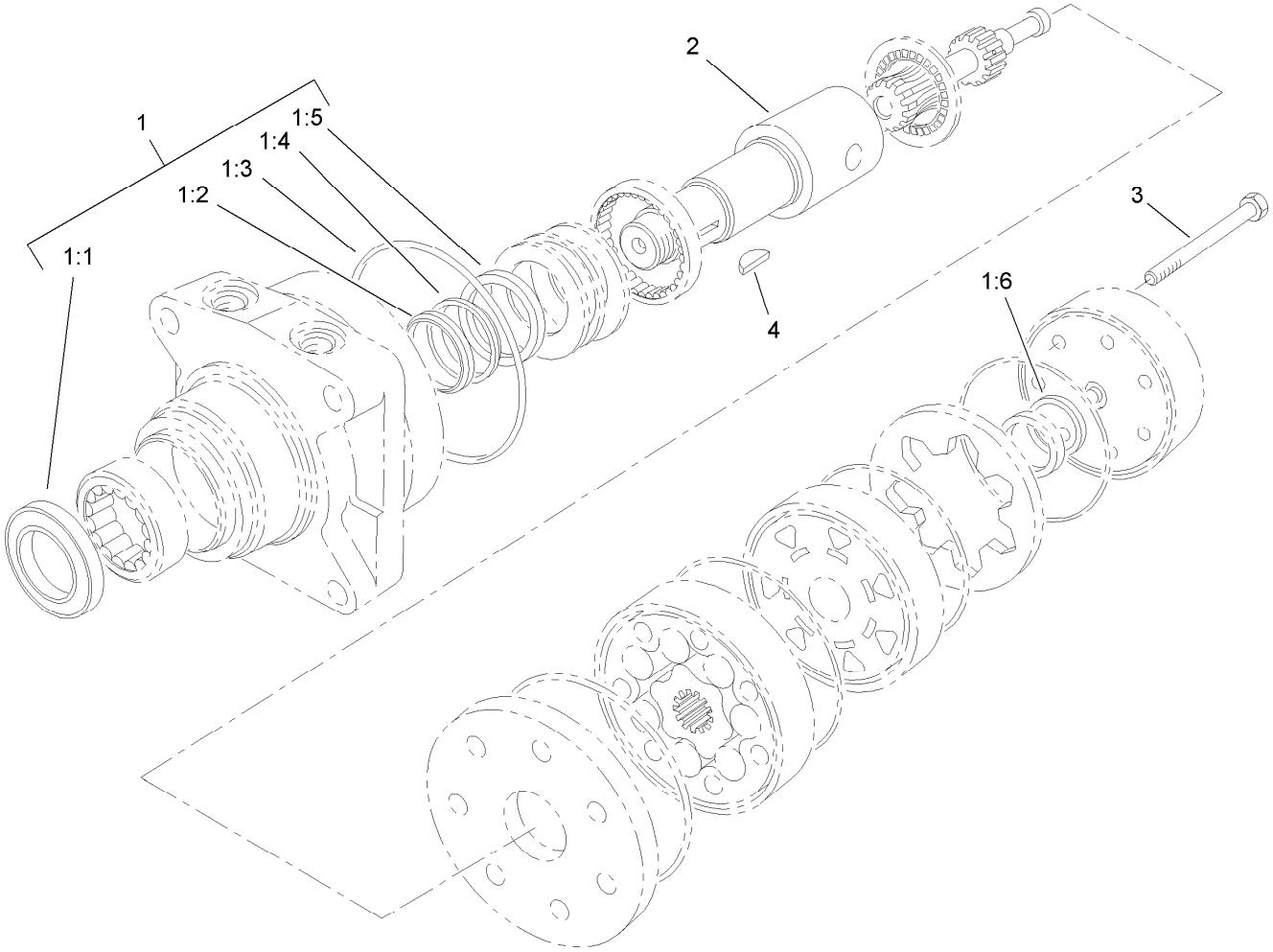

Hydraulic Motor Assembly No. 99-3052

Ref.	*Part Number*	*Qty.*	*Description*
1	94-8178	1	Seal Kit
1:1		1	Seal-Dirt And Water ●
1:2		1	Washer-Backup ●
1:3		5	Seal-Ring ●
1:4		1	Washer-Backup ●
1:5		1	Seal-Inner ●
1:6		1	Seal-Commutator ●
2	99-3090	1	Shaft-Coupling
3	99-3091	7	Screw-Cap, HH
4	3257-42	1	Key-Woodruff

● Not serviced separately

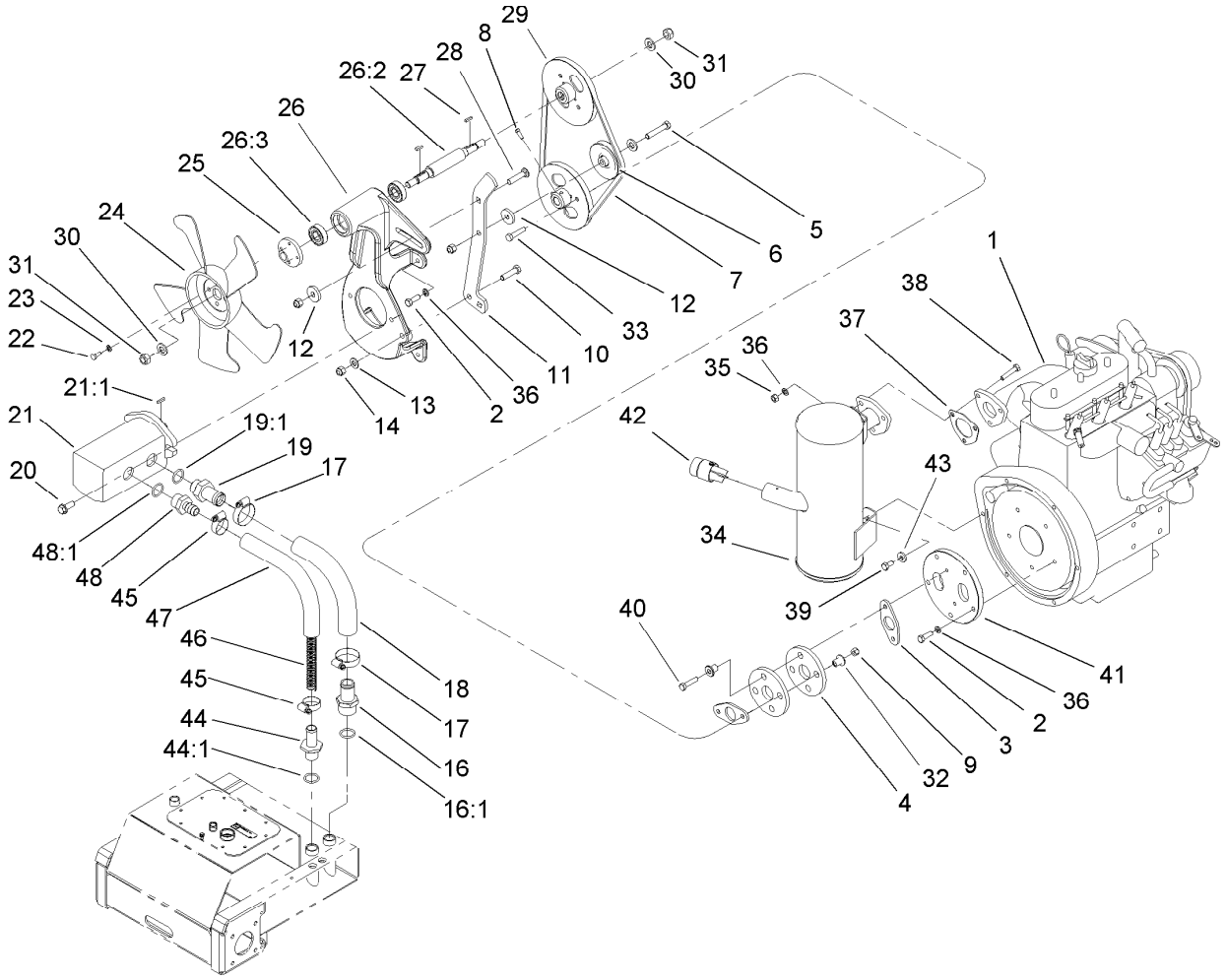

Engine Assembly

Ref.	Part Number	Qty.	Description
1	106-8195	1	Engine-Kubota
2	99-5131	9	Bolt
3	99-1430	2	Spacer-Coupler
4	44-2230	2	Coupling-Rubber
5	323-10	1	Screw-HH
6	63-8140	1	Pulley-Idler
7	92-8876	1	V-Belt
8	3241-5	2	Screw-Set
9	104-9469	2	Nut-Lock
10	323-8	1	Screw-HH
11	106-7649-03	1	Arm-Tensioner
12	99-5121	2	Spacer
13	3256-24	2	Washer-Plain
14	3296-39	3	Nut-Lock, NI
16	354-78	1	Fitting-STR
16:1	237-146	1	O-Ring
17	2412-111	2	Clamp-Hose, W/Liner
18	99-3046	1	Hose-Suction, Formed
19	99-3017	1	Fitting
19:1	237-81	1	O-Ring
20	66-9300	2	Screw-HHF
21	98-4702	1	Pump-Gear, Tandem
21:1	98-4700	1	Key-Square
21:2	99-1353	1	Seal Kit ●
22	321-2	4	Screw-HH

Ref.	Part Number	Qty.	Description
23	3253-3	4	Washer-Lock
24	43-1911	1	Fan
25	106-8153	1	Adapter-Fan
26	106-8163	1	Pump Mount ASM
26:2	98-0068	1	Shaft-Fan
26:3	38-7820	2	Bearing-Ball
27	100-1715	2	Key-Square
28	3231-5	1	Screw-CARR
29	99-5111	2	Pulley-Keyed
30	33096-00	2	Washer-Flat
31	98-8089	2	Nut-Lock
32	71-4411	4	Spacer
33	5-1470	2	Screw-HH
34	105-8390	1	Muffler
35	3217-6	3	Nut-Hex
36	3253-4	12	Washer-Lock
37	100-2238	1	Gasket-Muffler
38	322-7	3	Screw-HH
39	99-5132	1	Bolt
40	99-5133	2	Bolt
41	99-1431	1	Adapter-Flywheel
42	75-6880	1	Screen-Arrester, Spark
43	88-7200	1	Washer-Flat
44	99-6932	1	Fitting-STR
44:1	237-117	1	O-Ring

● Not illustrated

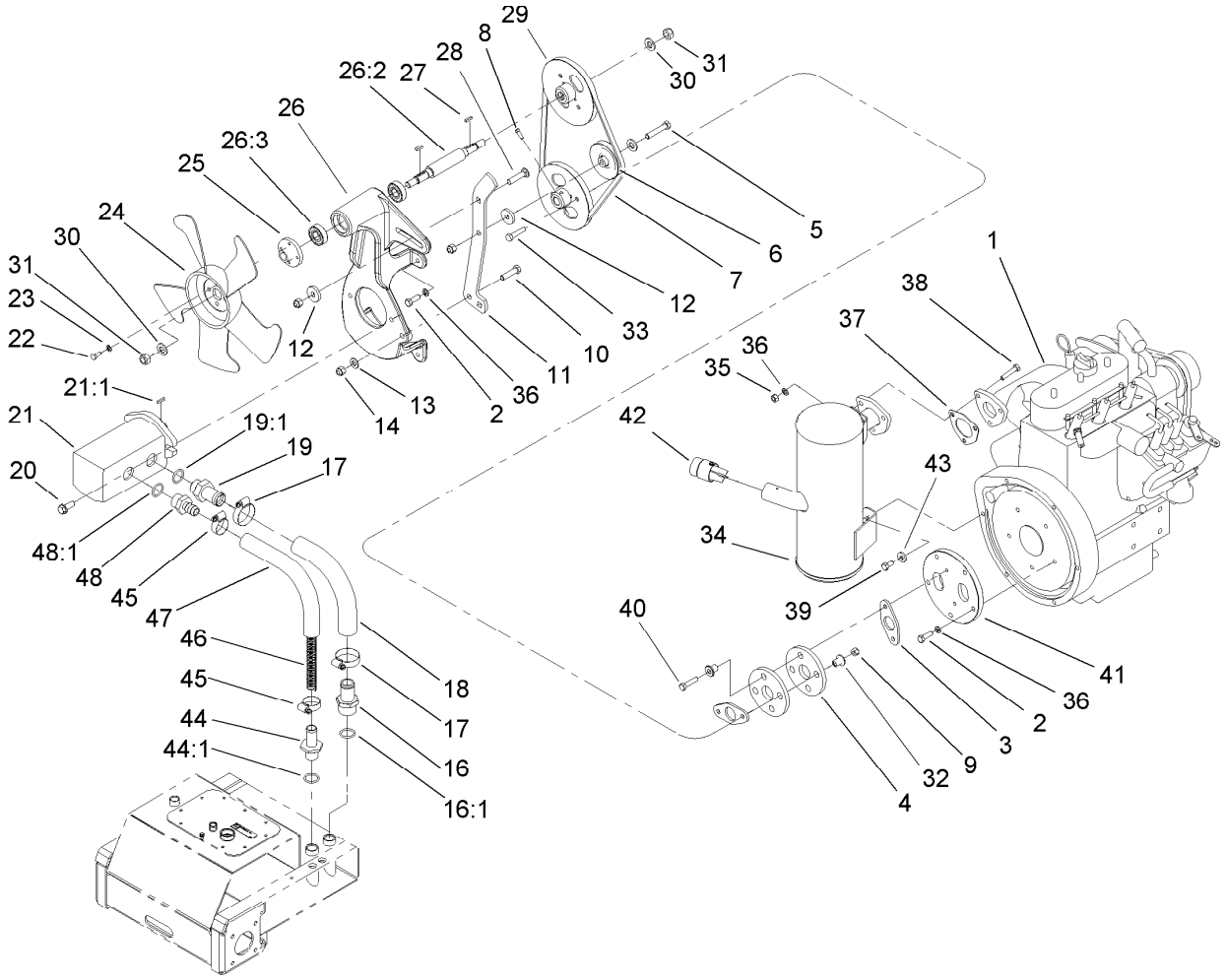

Engine Assembly (continued)

Ref.	Part Number	Qty.	Description
45	2412-129	2	Clamp-Hose
46	99-5349	1	Spring-Compression
47	98-2713	1	Hose-Suction, HYD
48	354-73	1	Fitting
48:1	237-81	1	O-Ring

● Not illustrated

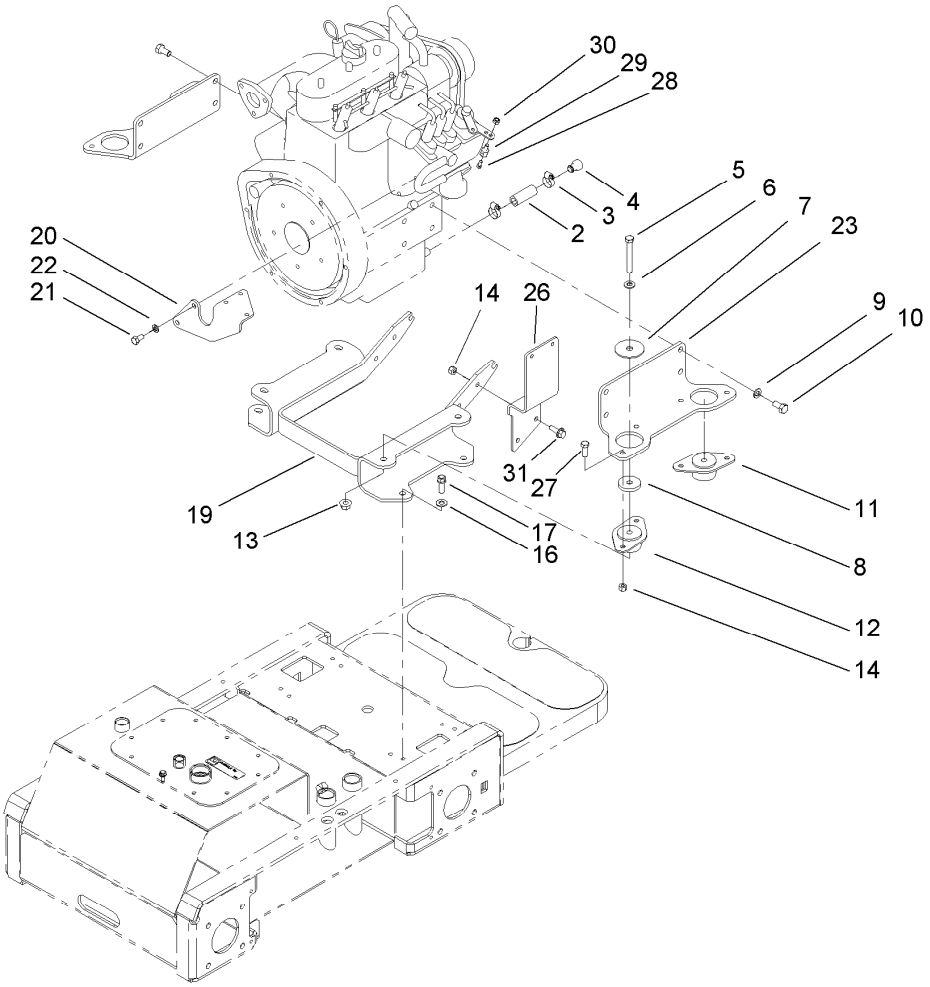

Engine Mounting Assembly

Ref.	Part Number	Qty.	Description
2	56-2230	1	Hose-Fuel
3	2412-36	2	Clamp-Hose
4	99-1445	1	Plug-Oil
5	323-13	4	Screw-HH
6	3256-24	4	Washer-Plain
7	87-5100	4	Washer-Snubbing
8	98-4596	4	Washer-Mount, Engine
9	42-9600	6	Washer-Lock
10	99-5130	8	Screw-HH
11	83-1030	2	Mount-Engine
12	93-5265	2	Mount-Engine
13	32128-29	4	Nut-Lock, Flange
14	3296-29	10	Nut-Lock, NI

Ref.	Part Number	Qty.	Description
16	3256-80	4	Washer-Plain
17	95-1726	4	Screw-Taptite
19	98-0066-01	1	Mount-Engine
20	105-4054-01	1	Mount-Solenoid
21	99-5132	2	Bolt
22	3253-4	2	Washer-Lock
23	98-0055-01	2	Plate-Mount, Engine
26	98-0059-01	1	Mount-Filter, Fuel
27	322-5	8	Screw-HH
28	25-8640	1	Screw-HH
29	93-0021	1	Swivel-Cable, Throttle
30	3296-13	1	Nut-Lock, NI
31	3234-29	2	Screw-HHF

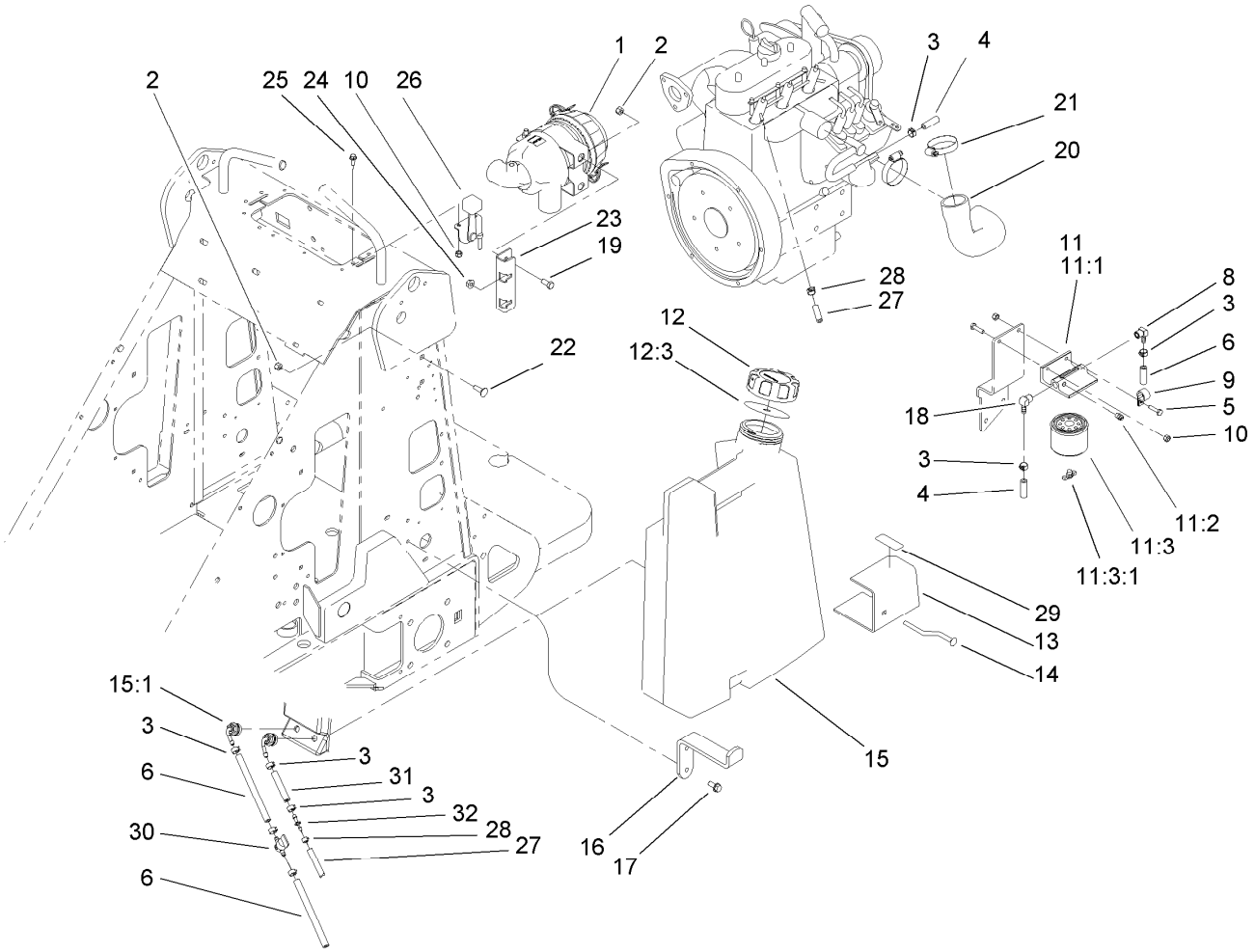

Fuel Tank and Air Filter Assembly

Ref.	Part Number	Qty.	Description
1	99-3160	1	Air Cleaner ASM
2	3296-29	3	Nut-Lock, NI
3	92-2379	8	Clamp-Hose
4	110-4113	1	Hose-Fuel
5	321-6	2	Screw-HH
6	107-0588	2	Hose-Fuel
8	304-96	1	Elbow
9	2412-87	1	Clamp-Cable
10	3296-42	4	Nut-Lock, NI
11	63-7650	1	Separator-Filter / Water
11:1	63-8280	1	Head ASM
11:2	63-8290	1	Vent-Air
11:3	63-8300	1	Element-Spin On
11:3:1	63-8310	1	Valve-Drain
12	104-7419	1	Cap-Fuel, Diesel
12:3	104-7420	1	Gasket-Vented
13	99-1444-03	1	Plate-Mount, Left
14	98-4657	1	Bolt-Mount
15	105-8438	1	LH Fuel Tank ASM

Ref.	Part Number	Qty.	Description
15:1	103-2615	2	Fitting-Fuel, Bulkhead
16	98-4656-03	1	Mount-Bottom, Tank
17	32144-70	2	Screw-HWHTF
18	353-781	1	Fitting-HYD, 90
19	322-3	2	Screw-HH
20	99-5041	1	Hose-Cleaner, Air
21	2412-92	2	Clamp-Hose
22	3230-2	2	Bolt-CARR
23	99-3080-03	1	Mount-Cleaner, Air
24	32128-20	2	Nut-HF
25	3234-33	2	Screw-HHF
26	99-1422	1	Control-Throttle
27	110-8751	1	Hose-Fuel
28	2412-80	2	Clamp-Hose
29	93-6680	1	Decal-Diesel
30	1-603770	1	Valve-Fuel
31	109-0304	1	Hose-Fuel
32	106-8150	1	Fitting-Straight

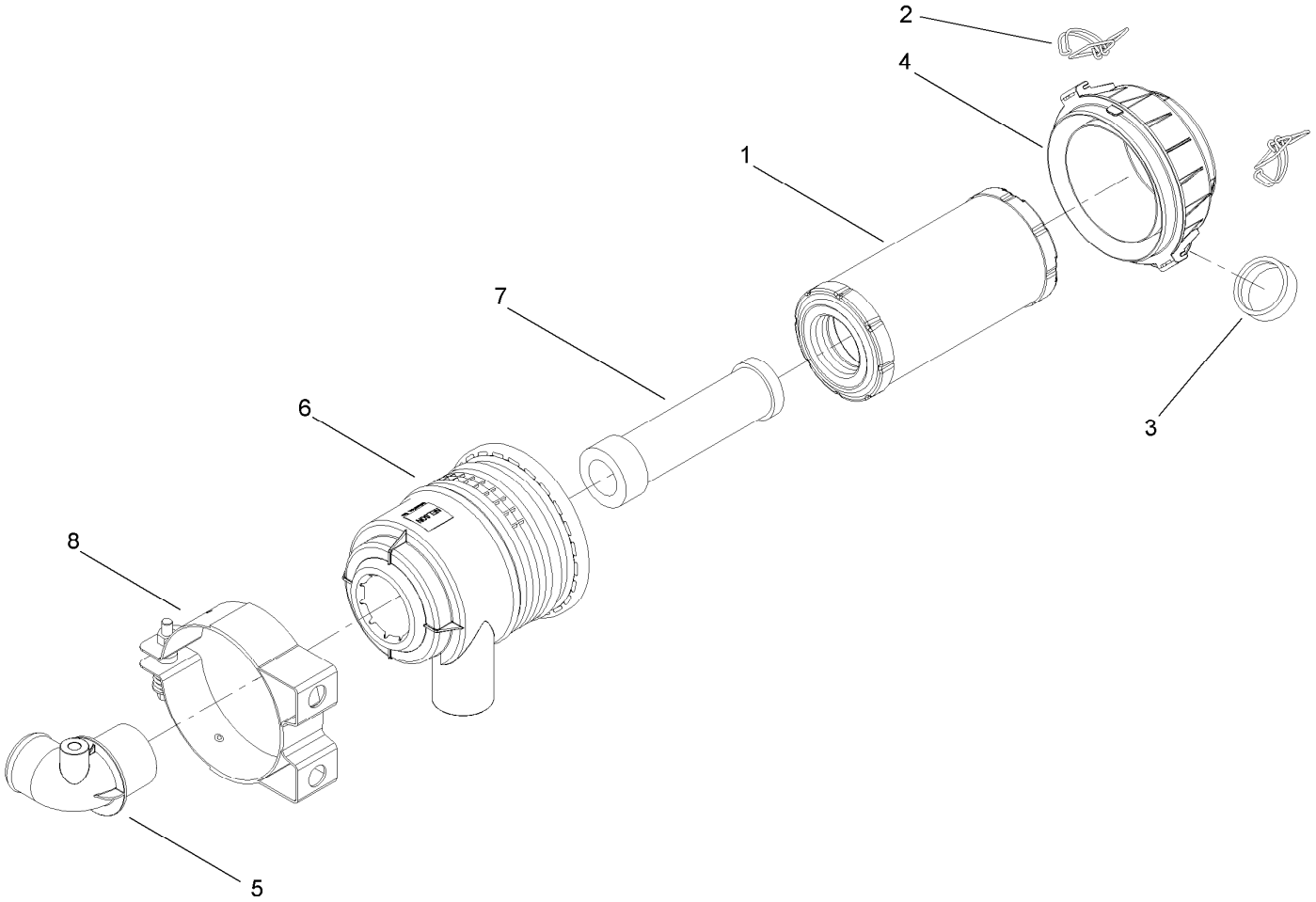

Air Cleaner Assembly No. 99-3160

Ref.	*Part Number*	*Qty.*	*Description*
1	99-3173	1	Element-Filter, Air
2	99-3174	2	Clip-Cleaner, Air
3	99-3175	1	Valve-Ejector, Dust
4	99-3176	1	Cover
5	99-3183	1	Tube ASM
6	99-3184	1	Housing
7	99-3198	1	Filter-Safety
8	99-3197	1	Mounting Bracket ASM

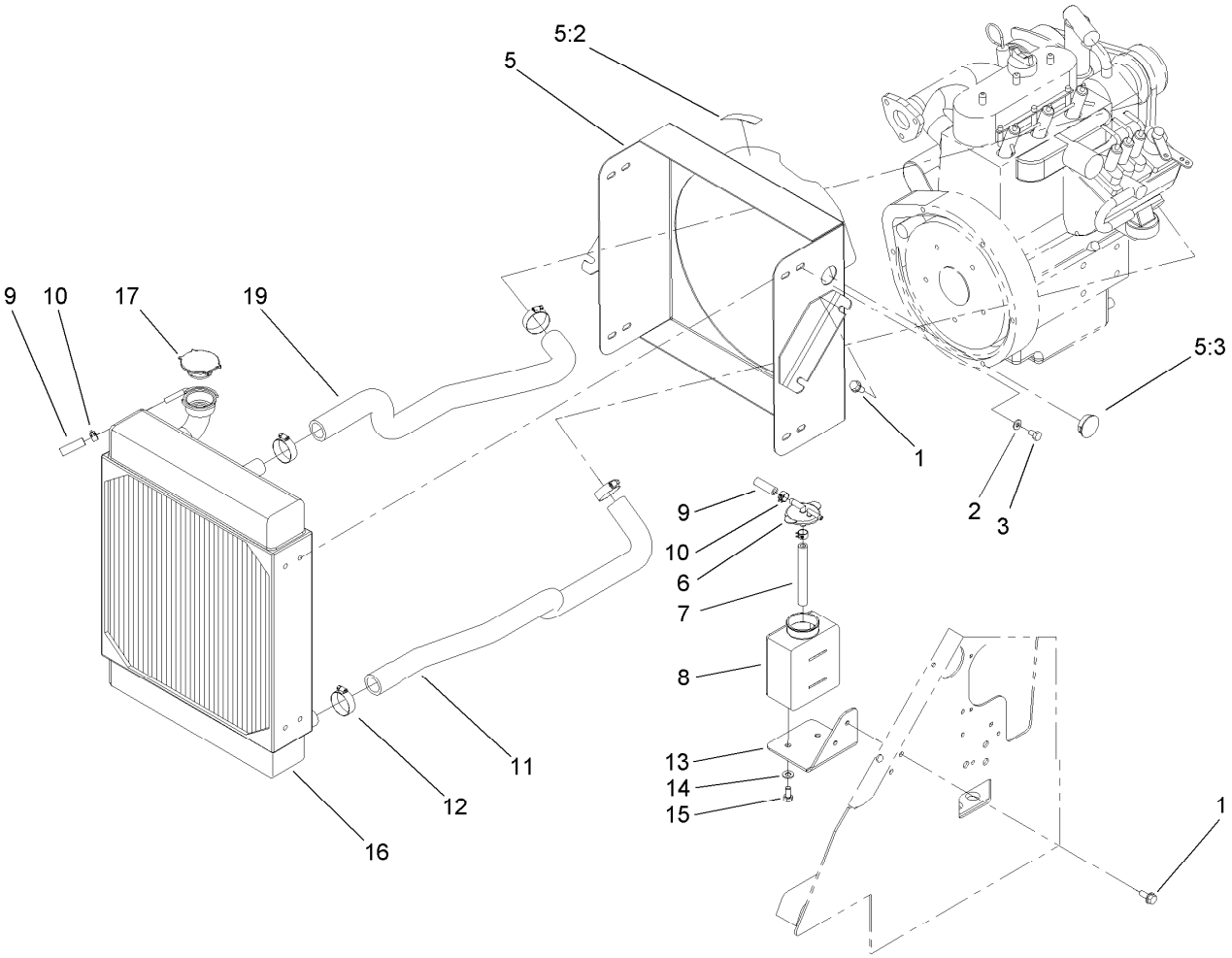

Radiator Mount Assembly

Ref.	Part Number	Qty.	Description
1	32144-70	6	Screw-HWHTF
2	3256-82	8	Washer-Flat
3	322-1	8	Screw-HH
5	104-4648	1	Mount-Radiator
5:2	93-6681	1	Decal-Warning, Fan
5:3	94-1402	1	Plug-Hole
6	93-2048	1	Cap-Tank, Overflow
7	94-1348	1	Hose-Fuel
8	93-2049	1	Tank-Overflow
9	71-3383	1	Hose-Fuel
10	92-2379	3	Clamp-Hose
11	99-5042	1	Hose-Radiator, Lower
12	2412-34	4	Clamp-Hose
13	99-1446-01	1	Mount-Tank, Overflow
14	3256-23	2	Washer-Plain
15	99-5132	2	Bolt
16	99-5125	1	Radiator
17	66-3240	1	Cap-Radiator
19	99-5043	1	Hose-Radiator, Upper

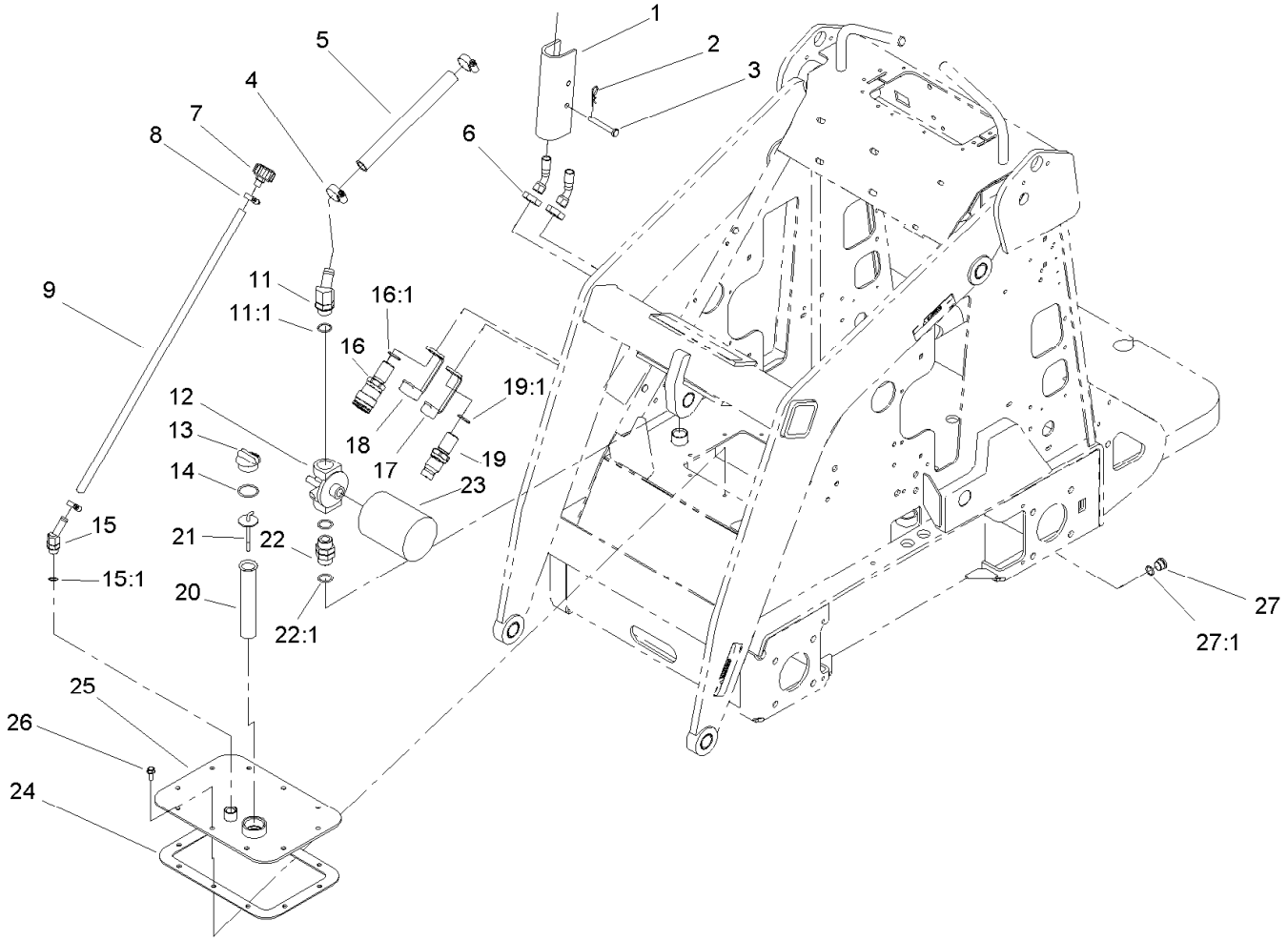

Hydraulic Tank and Filter Assembly

Ref.	Part Number	Qty.	Description
1	98-4675-01	2	Lock-Cylinder
2	3290-467	2	Pin-Hair
3	283-52	2	Pin-Clevis
4	2412-129	2	Clamp-Hose
5	98-4745	1	Hose-HYD, Suction, Hi
6	340-74	2	Nut-Lock, Bulkhead
7	68-6150	1	Breather
8	2412-36	2	Clamp-Hose
9	100-1748	1	Hose-Vent
11	354-127	1	Fitting-Elbow45
11:1	237-81	1	O-Ring
12	92-5821	1	Head-Filter
13	93-7498	1	Plug-Plastic
14	237-123	1	O-Ring
15	354-126	1	Fitting-Elbow, 45
15:1	237-79	1	O-Ring
16	105-8394	1	Bulkhead Coupler ASM

Ref.	Part Number	Qty.	Description
16:1	237-65	1	O-Ring
16:2	105-8396	1	Seal Kit ●
17	100-8815	1	Cap-Dust, Nipple
18	100-8816	1	Cap-Dust, Coupler
19	105-8395	1	Bulkhead Nipple ASM
19:1	237-65	1	O-Ring
19:2	100-6120	1	Seal Kit ●
20	61-2790	1	Filter-Screen
21	100-2097	1	Dipstick-Oil
22	98-9906	1	Fitting-Thread, Straight
22:1	237-81	2	O-Ring
23	54-0110	1	Filter-Oil, Transmission
24	98-9927	1	Gasket-Cover
25	100-1713-01	1	Cover
26	98-9940	10	Screw-HHF
27	353-988	1	Plug-Hex
27:1	237-79	1	O-Ring

● Not illustrated

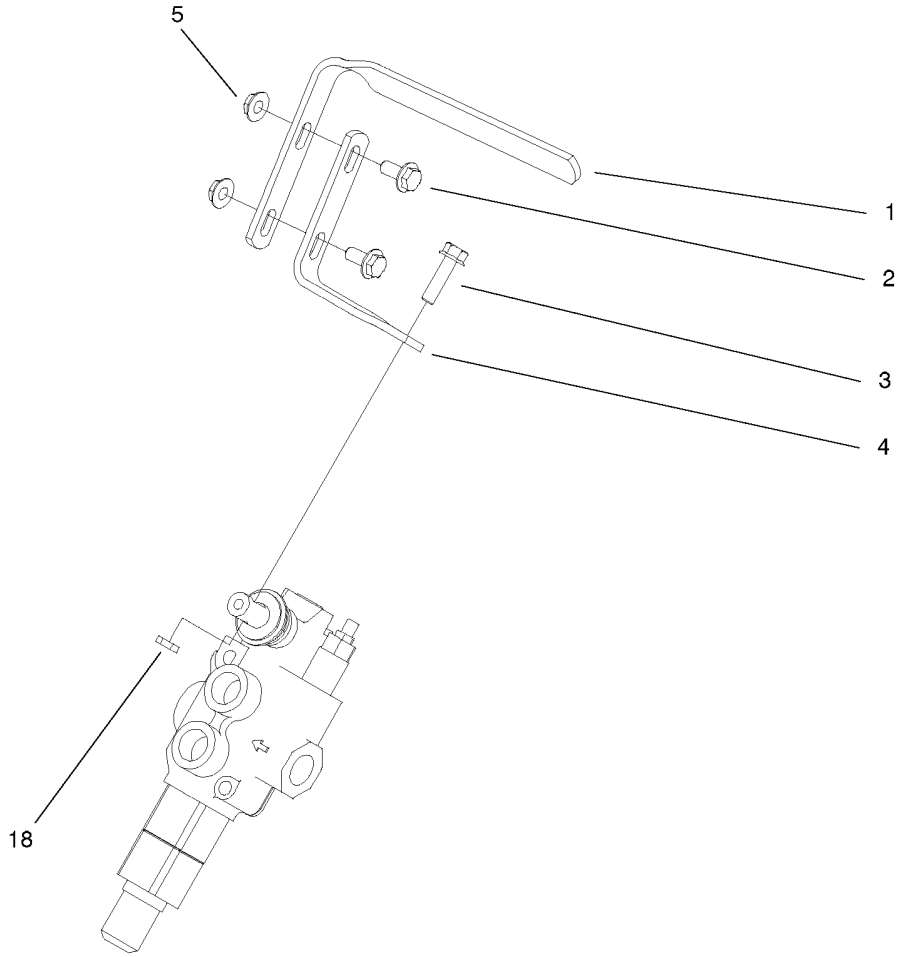

Auxillary Control Lever Assembly

Ref.	*Part Number*	*Qty.*	*Description*
1	98-9090	1	Grip-Control
2	3234-5	2	Screw-HHF
3	33104-030	1	Screw-HHF
4	99-1376	1	Mount-Control
5	32128-44	2	Nut
18	42-9580	1	Nut-Hex

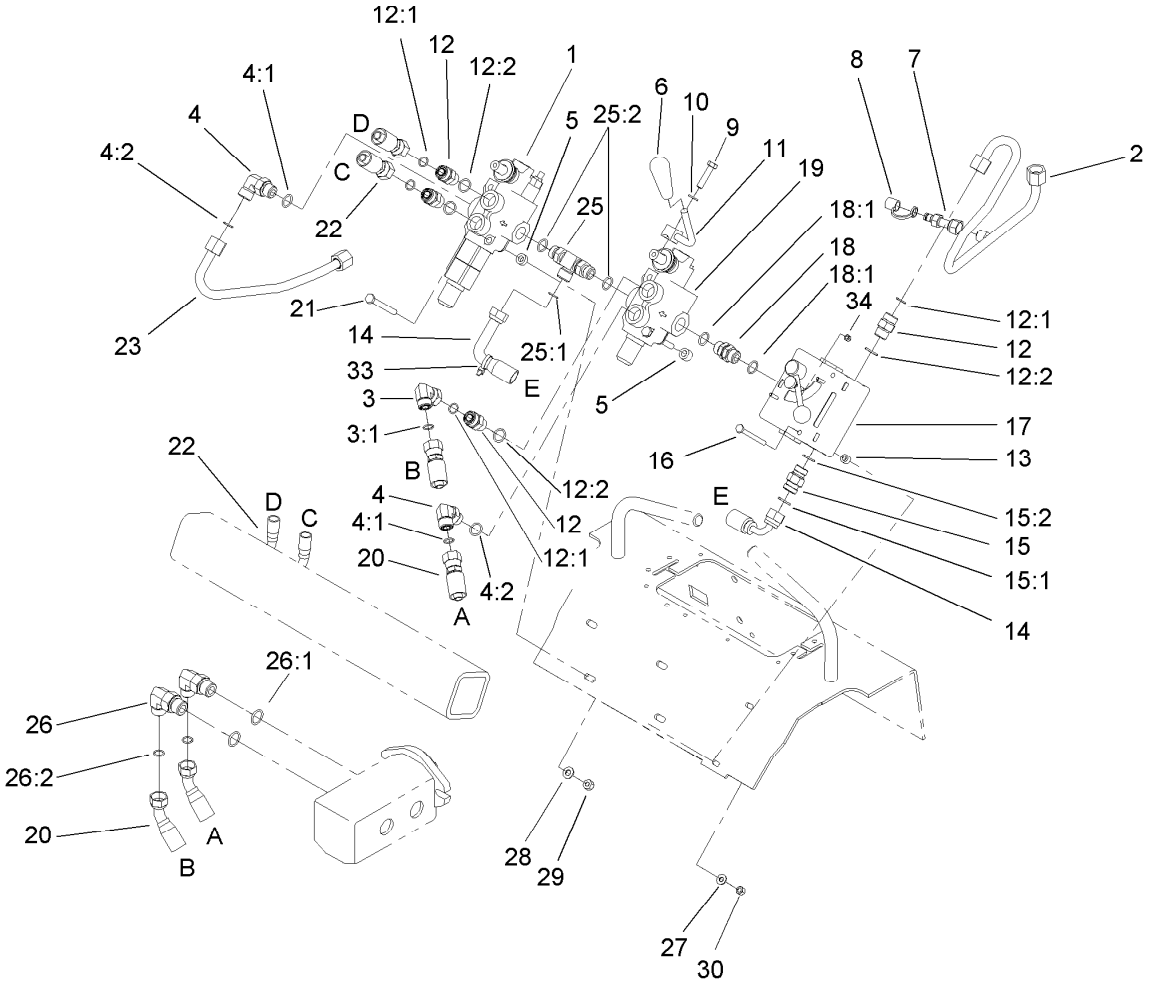

Hydraulic Valve Assembly

Ref.	Part Number	Qty.	Description
1	99-3077	1	Valve-HYD, Auxiliary
2	105-7878	1	Tube-HYD
3	94-6031	1	Elbow-90
3:1	237-30	1	O-Ring
4	340-98	2	Fitting-Elbow, 90 DEG
4:1	237-79	1	O-Ring
4:2	237-30	1	O-Ring
5	98-4695	4	Spacer
6	98-0152	1	Knob-Tapered
7	86-5480	1	Nipple-Test
8	354-79	1	Cap-Dust
9	33114-035	1	Screw-HH
10	3253-4	1	Washer-Lock
11	108-9709-03	1	Lever-Control
12	340-4	4	Fitting-Straight
12:1	237-30	1	O-Ring
12:2	237-79	1	O-Ring
13	98-4799	2	Spacer
14	100-2245	1	Hose-HYD
15	98-4735	1	Valve-Check, HYD
15:1	237-30	1	O-Ring
15:2	237-79	1	O-Ring

Ref.	Part Number	Qty.	Description
16	321-14	2	Screw-HH
17	104-4221	1	HYD Valve Kit
18	95-3209	1	Fitting-Thread, Straight
18:1	237-79	2	O-Ring
19	99-3072	1	Valve-Selector, HYD
20	100-1730	2	Hose-Pump, HYD
21	322-13	4	Screw-HH
22	100-8817	2	Hose-HYD
23	105-7879	1	Tube-HYD
25	98-9079	1	Adapter-Tee, Adjustable
25:1	237-30	1	O-Ring
25:2	237-79	2	O-Ring
26	340-105	2	Fitting-Elbow, 90 DEG
26:1	237-80	1	O-Ring
26:2	237-30	1	O-Ring
27	3256-22	2	Washer-Flat
28	3256-23	4	Washer-Plain
29	3296-29	4	Nut-Lock, NI
30	3296-42	2	Nut-Lock, NI
33	3290-379	18	Tie-Cable
34	3296-27	1	Nut-Lock, NI

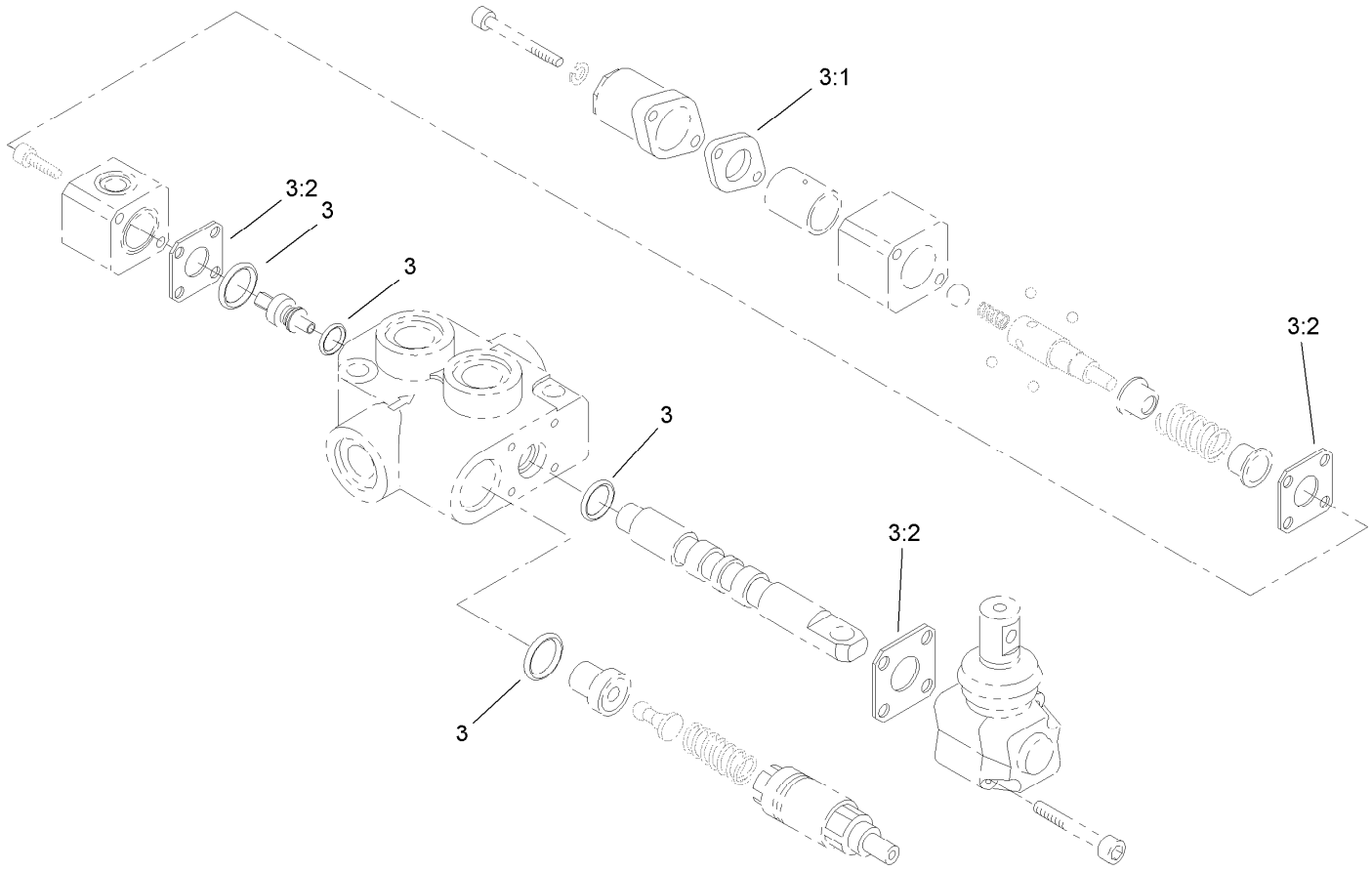

Auxiliary Hydraulic Valve Assembly No. 99-3077

Ref.	*Part Number*	*Qty.*	*Description*
3	99-4391	1	Seal Kit
3:1	99-3074	1	Gasket
3:2	99-3075	3	Gasket

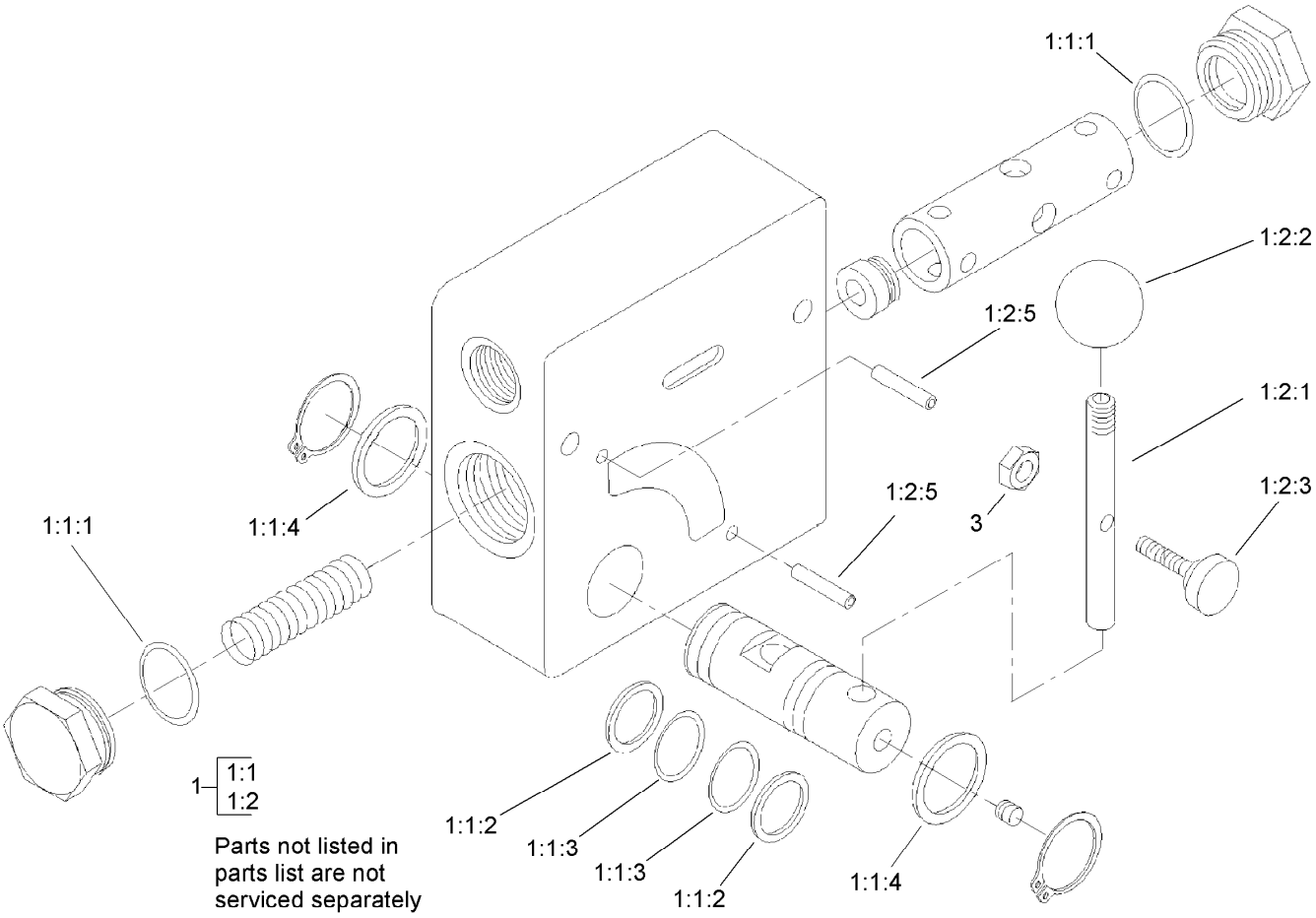

Hydraulic Valve Assembly No. 104-4221

Ref.	*Part Number*	*Qty.*	*Description*
1		1	Valve-Flow, Hydraulic ●
1:1	104-4231	1	Seal Kit
1:1:1		2	Seal-Dust ●
1:1:2		2	Back-Up ●
1:1:3		2	Seal-Dust ●
1:1:4		2	Quad Ring ●
1:2	98-9098	1	Handle Hardware Kit
1:2:1		1	Handle ●
1:2:2		1	Knob ●
1:2:3		1	Screw-Thumb ●
1:2:5		2	Pin-Roll ●
3	3296-27	1	Nut-Lock, NI

● Not serviced separately

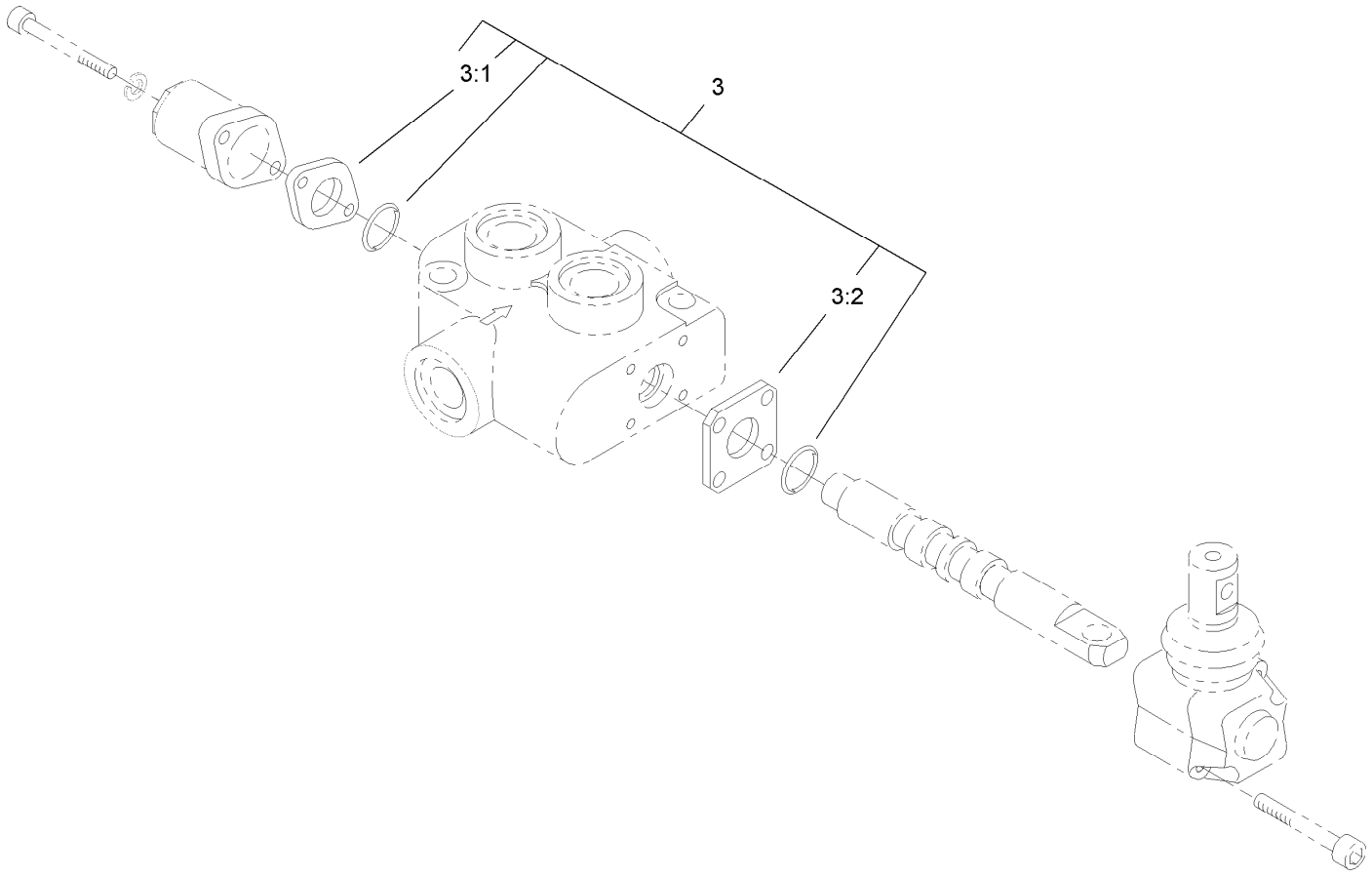

Hydraulic Selector Valve Assembly No. 99-3072

Ref.	*Part Number*	*Qty.*	*Description*
3	99-4391	1	Seal Kit
3:1	99-3074	1	Gasket
3:2	99-3075	3	Gasket

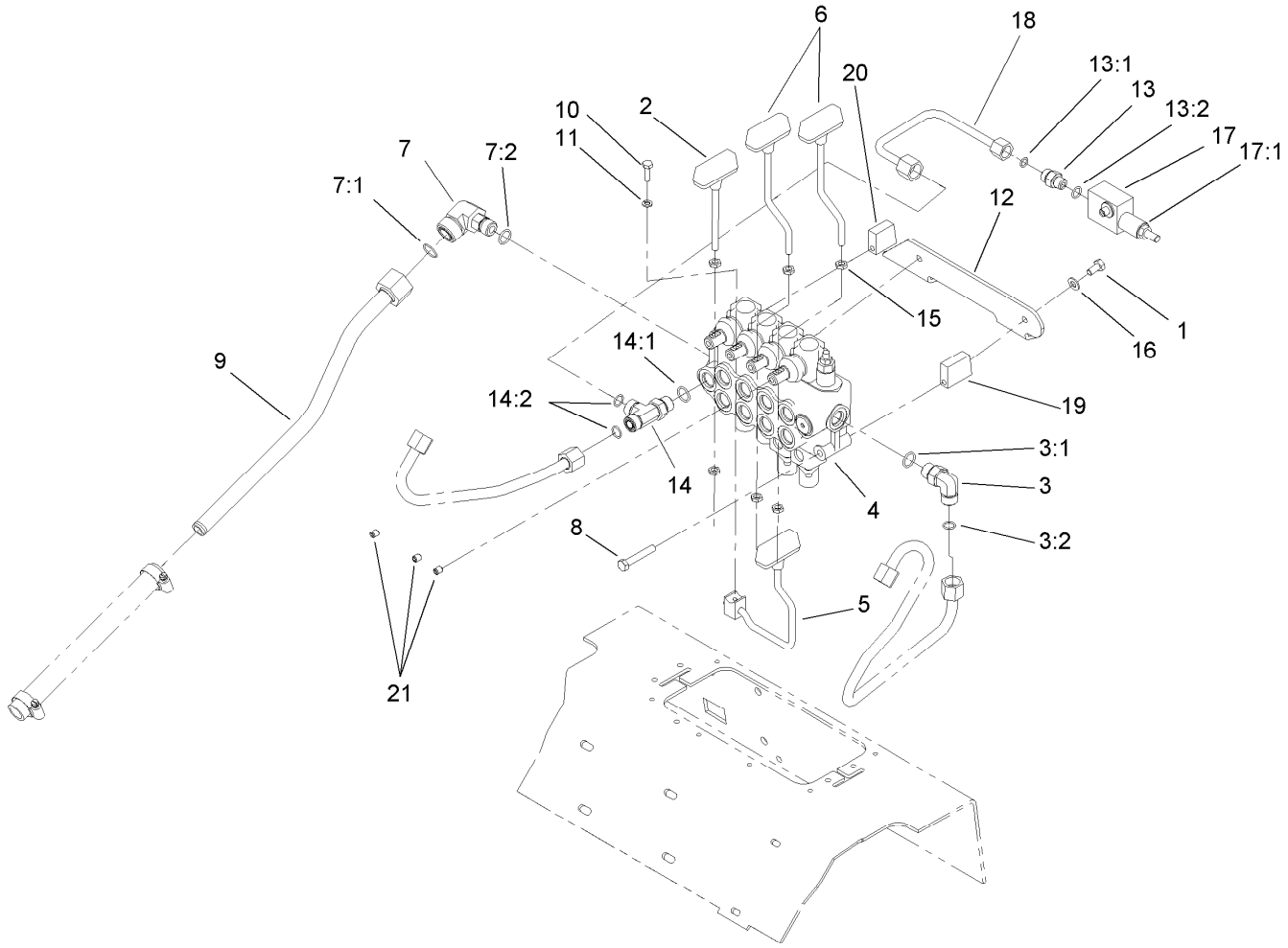

4-Spool Valve Assembly

Ref.	Part Number	Qty.	Description
1	322-2	3	Screw-HH
2	105-7881	1	Lever-Cylinder
3	340-98	1	Fitting-Elbow, 90 DEG
3:1	237-79	1	O-Ring
3:2	237-30	1	O-Ring
4	105-8377	1	HYD Four Spool Valve ASM
5	106-8165	1	Lever-Control
6	104-5733	2	Lever-Drive
7	92-5696	1	Fitting-Elbow, 90 DEG
7:1	237-58	1	O-Ring
7:2	237-79	1	O-Ring
8	322-11	3	Screw-HH
9	106-8177	1	Tube-Tank, HYD
10	321-5	1	Screw-HH
11	3253-3	1	Washer-Lock
12	104-4222-03	1	Bracket-Cover, Mount
13	340-2	1	Fitting-Straight
13:1	237-22	1	O-Ring
13:2	237-42	1	O-Ring
14	340-109	1	Fitting-Tee
14:1	237-79	1	O-Ring
14:2	237-30	2	O-Ring
15	42-9580	6	Nut-Hex
16	3256-23	3	Washer-Plain
17	105-7882	1	Relief Valve ASM
17:1	105-8358	1	Cartridge-Valve, Relief
17:2	105-8357	1	Seal Kit ●
18	105-7866	1	Line-HYD
19	105-8354	2	Spacer-Lower V
20	105-7870	1	Spacer-Upper V
21	105-4068	3	Screw-Set, HSH

● Not illustrated

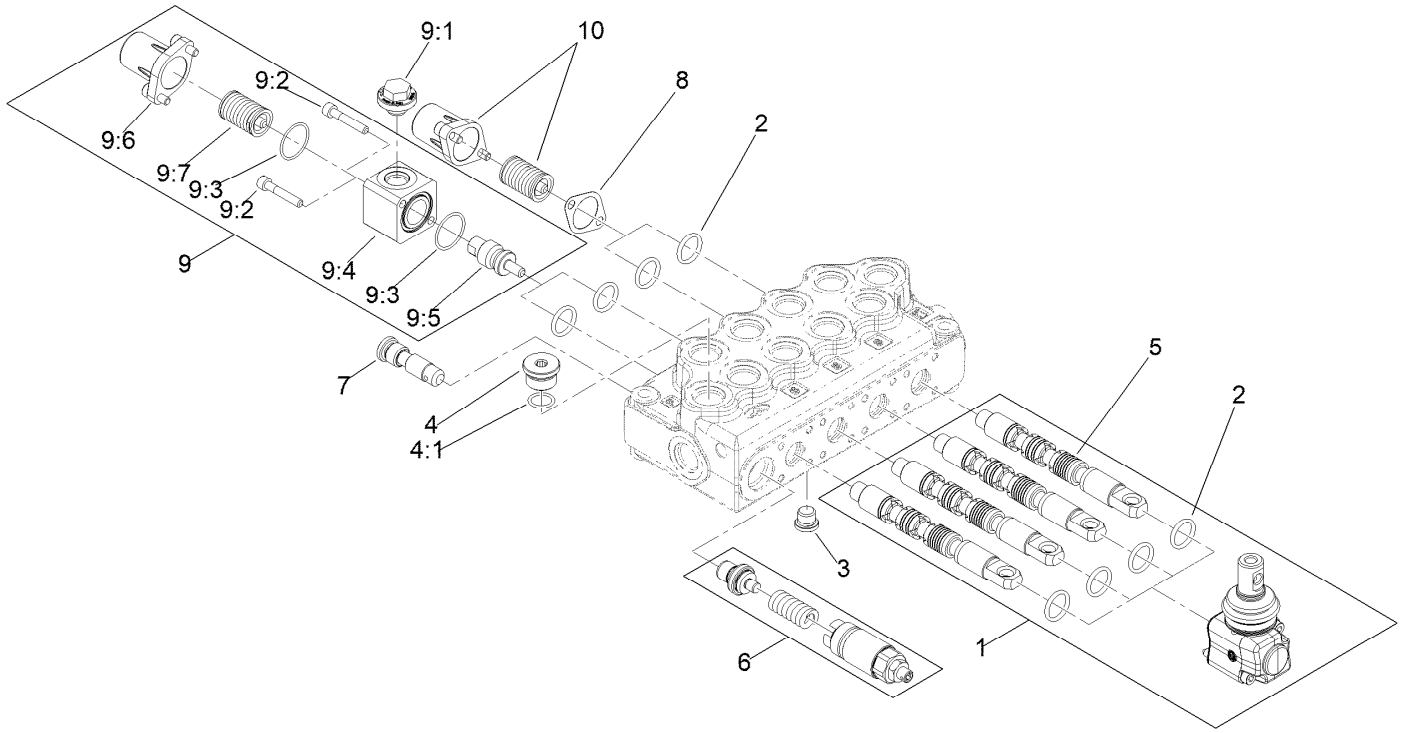

Four Spool Hydraulic Valve Assembly No. 105-8377

Ref.	Part Number	Qty.	Description
1	139-8891	4	Lsg/S5 Lever Kit With Screws
2	139-8886	8	O-Ring Seal, 70 Sh
3	139-8884	1	SAE 4 Plug
4	353-988	1	Plug-Hex
4:1	237-79	1	O-Ring
5	105-8441	4	Spool-Valve
6	139-8890	1	Vmd5 (Jn) Inlet Part
7	139-8880	1	Kit-Valve Body
8	99-3074	2	Gasket
9	139-8887	2	S5 Command Kit
9:1		1	Plug ●
9:2		2	Screw ●
9:3		2	Oring ●
9:4		1	Block ●
9:5		1	Pin ●
9:6		1	End Cap ●
9:7		1	Spring ●
10	161-1080	2	S5 End Cap Kit

● Not serviced separately

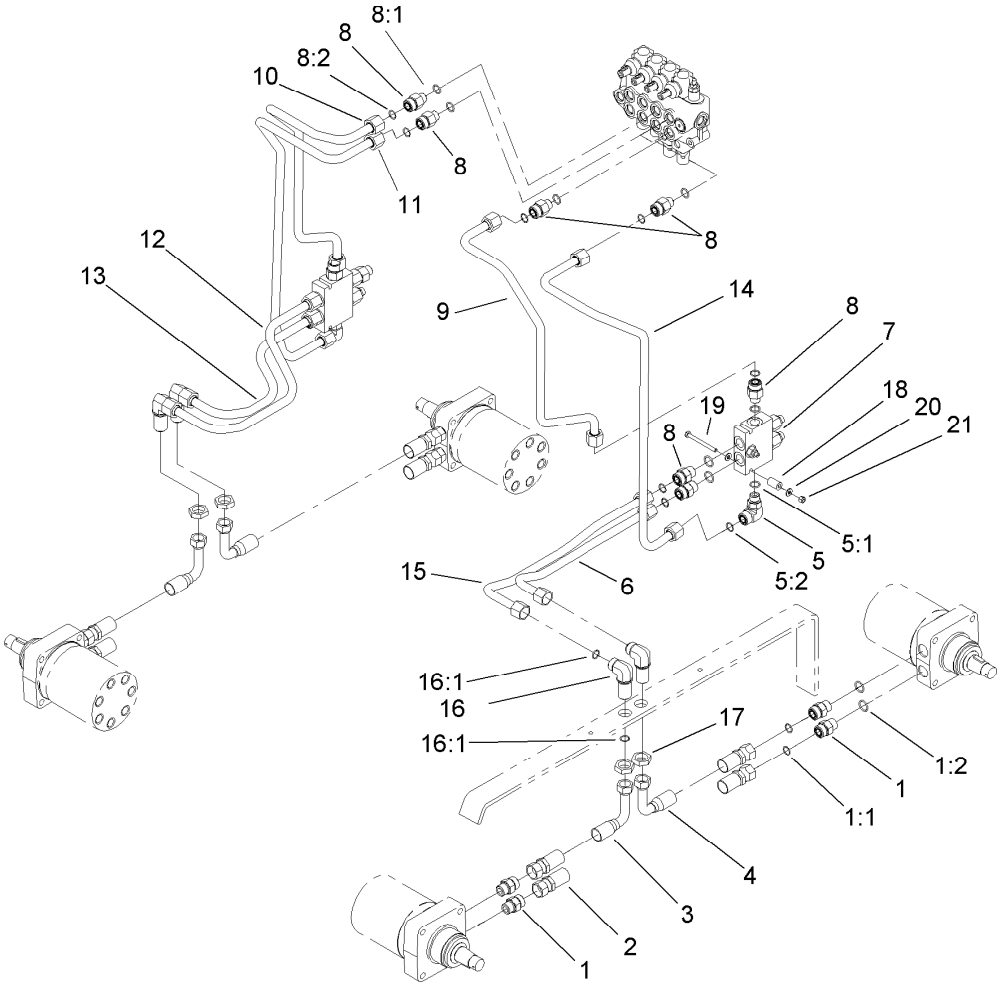

Hydraulic Motor Assembly

Ref.	Part Number	Qty.	Description
1	340-7	8	Fitting-Straight
1:1	237-65	1	O-Ring
1:2	237-80	1	O-Ring
2	99-3012	2	Hose-HYD
3	99-3010	2	Hose-HYD
4	99-3011	2	Hose-HYD
5	340-153	2	Fitting-Elbow, 90 DEG
5:1	237-79	1	O-Ring
5:2	237-151	1	O-Ring
6	99-3022	1	Tube-HYD
7	99-3040	2	HYD Counterbalance Valve ASM
8	340-155	10	Fitting-Straight
8:1	237-79	1	O-Ring
8:2	237-151	1	O-Ring

Ref.	Part Number	Qty.	Description
9	108-9729	1	Tube-HYD
10	108-9727	1	Tube-HYD
11	108-9726	1	Tube-HYD
12	99-3025	1	Tube-HYD
13	99-3028	1	Tube-HYD
14	108-9725	1	Tube-HYD
15	99-3026	1	Tube-HYD
16	340-72	4	Fitting-Bulkhead, 90 DEG
16:1	237-65	2	O-Ring
17	340-74	4	Nut-Lock, Bulkhead
18	99-3057	2	Spacer-Valve
19	321-23	2	Screw-HH
20	3256-22	4	Washer-Flat
21	3296-42	2	Nut-Lock, NI

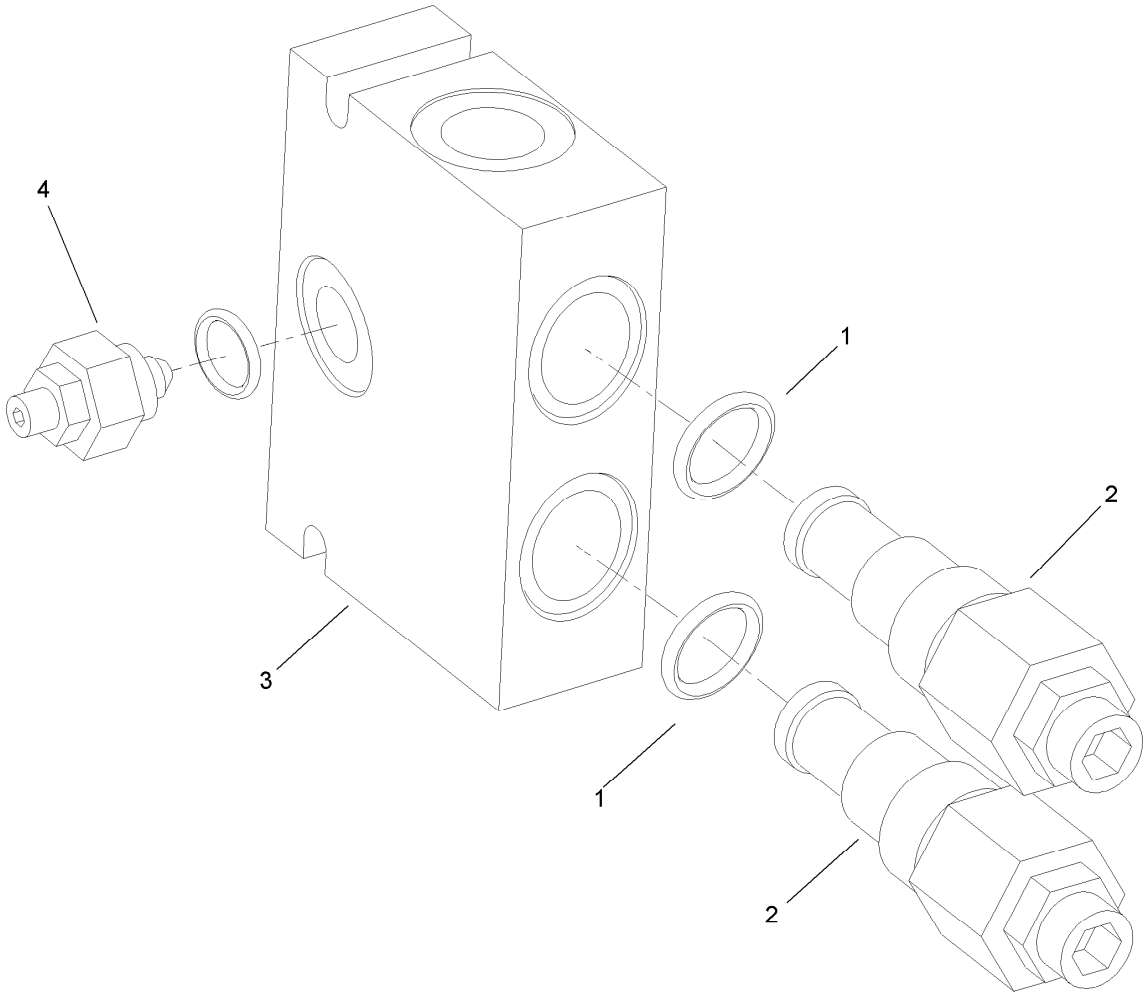

Counterbalance Valve Assembly No. 99-3040

Ref.	*Part Number*	*Qty.*	*Description*
1	105-4099	1	Seal Kit ●
2	99-3271	2	Valve-Cartridge
3	100-8864	1	Manifold ASM
4	100-8865	1	Needle Valve ASM

● Not illustrated

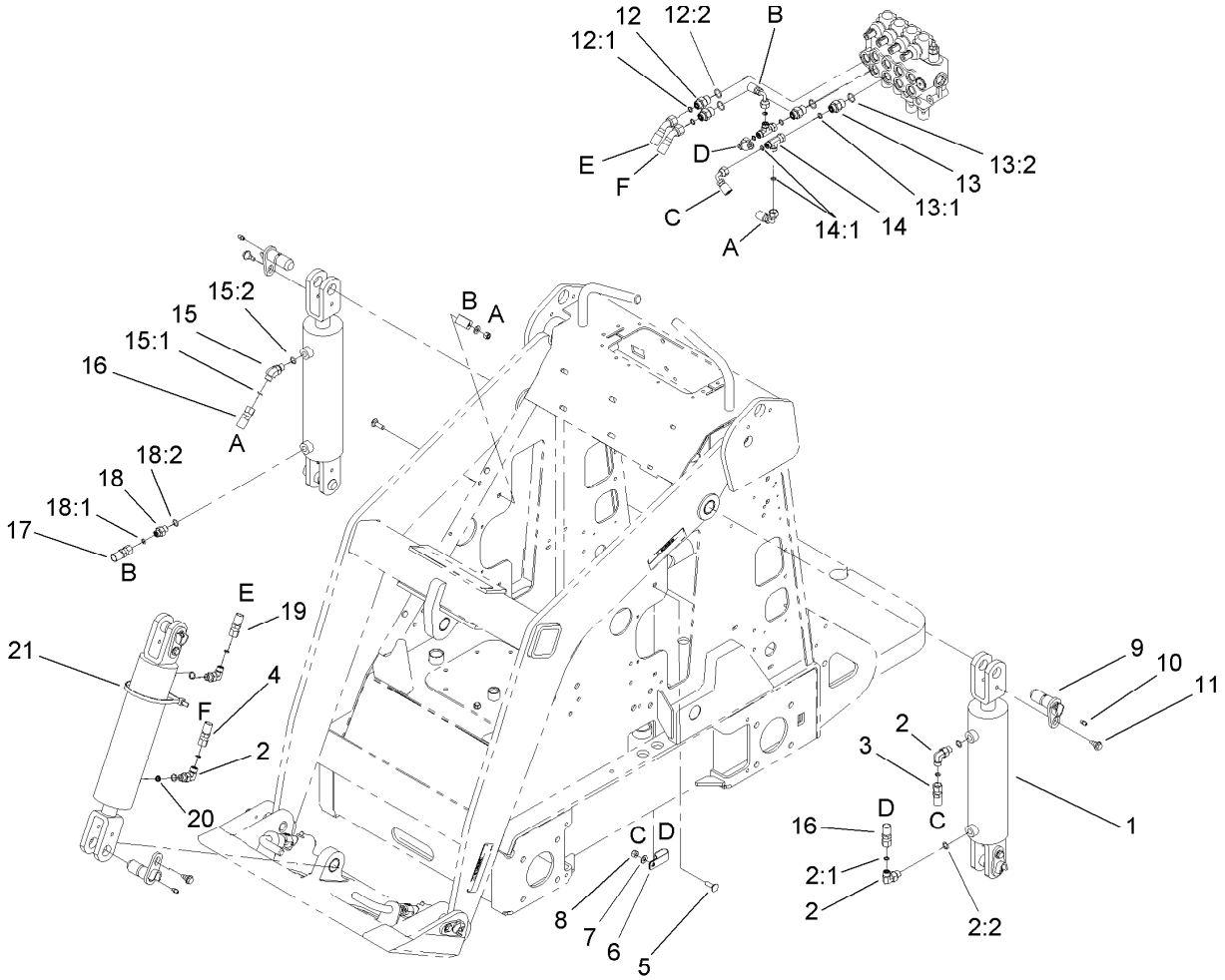

Hydraulic Cylinder Assembly

Ref.	Part Number	Qty.	Description
1	105-7867	3	HYD Cylinder ASM
1:1	105-8356	1	Seal Kit ●
2	340-82	4	Fitting-Elbow, 90 DEG
2:1	237-42	1	O-Ring
2:2	237-21	1	O-Ring
3	98-4748	1	HYD Hose ASM
4	98-4726	1	Hose-HYD
5	3230-2	2	Bolt-CARR
6	2412-137	2	Clamp-R, Double
7	3256-23	2	Washer-Plain
8	3296-29	2	Nut-Lock, NI
9	99-1414	6	Pin-Pivot
10	302-5	6	Fitting-Grease
11	99-5105	6	Screw-Shoulder
12	340-3	2	Fitting-Straight
12:1	237-22	1	O-Ring
12:2	237-79	1	O-Ring

Ref.	Part Number	Qty.	Description
13	340-133	2	Fitting-STR
13:1	237-79	1	O-Ring
13:2	237-21	1	O-Ring
14	340-151	2	Fitting-Tee
14:1	237-75	3	O-Ring
15	340-137	1	Fitting
15:1	237-21	1	O-Ring
15:2	237-42	1	O-Ring
16	98-4725	2	Hose-HYD
17	100-1731	1	Hose-HYD, Right
18	340-1	1	Fitting-Straight
18:1	237-21	1	O-Ring
18:2	237-42	1	O-Ring
19	98-4727	1	Hose-HYD
20	108-4714	1	Orifice-Port Insert, One Way
21	3334-945	1	Tie-Cable

● Not illustrated

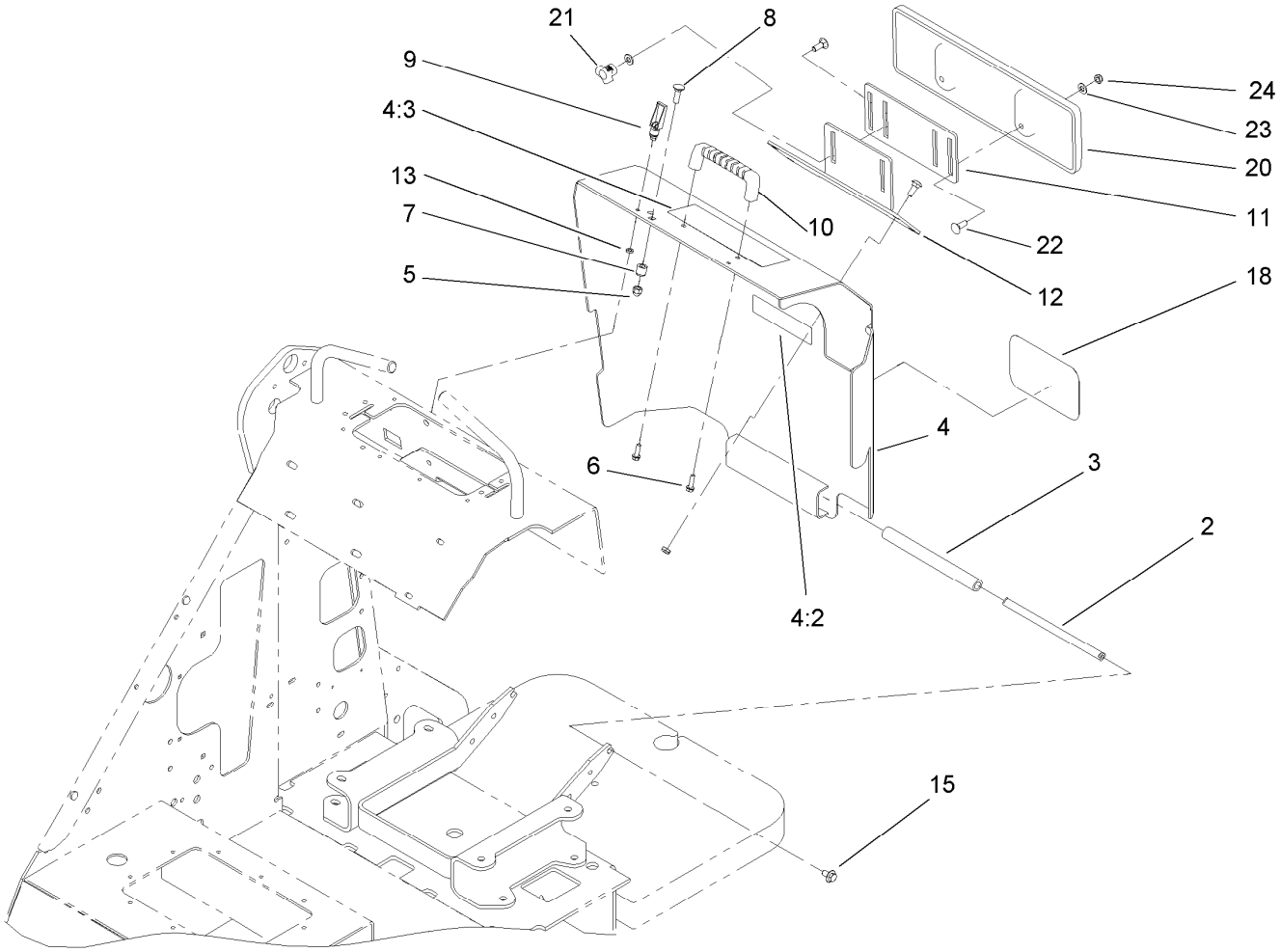

Rear Cover Assembly

Ref.	Part Number	Qty.	Description
2	99-3083	1	Bar-Hinge
3	99-3085	1	Hose-Hinge
4	104-9450	1	Cover ASM
4:2	93-7814	1	Decal-Danger
4:3	98-9051	1	Decal-Danger
5	32111-8	1	Nut-Acorn
6	46-8091	2	Screw-HWH
7	99-3035	1	Spacer-Guide
8	3230-22	1	Screw-CARR
9	74-5950	2	Latch-Swell
10	65-5100	1	Handle-Door
11	105-0337-03	1	Plate-Adjusting
12	105-0331-03	1	Bracket-Support, Thigh
13	99-3058	2	Washer
15	3234-7	2	Screw-HHF
18	93-7340	1	Decal
20	105-0333	1	Support-Thigh
21	104-6156	2	Knob-Adjustment
22	3230-16	8	Screw-CARR
23	3256-70	4	Washer-Flat
24	3296-72	6	Nut-Lock, NI

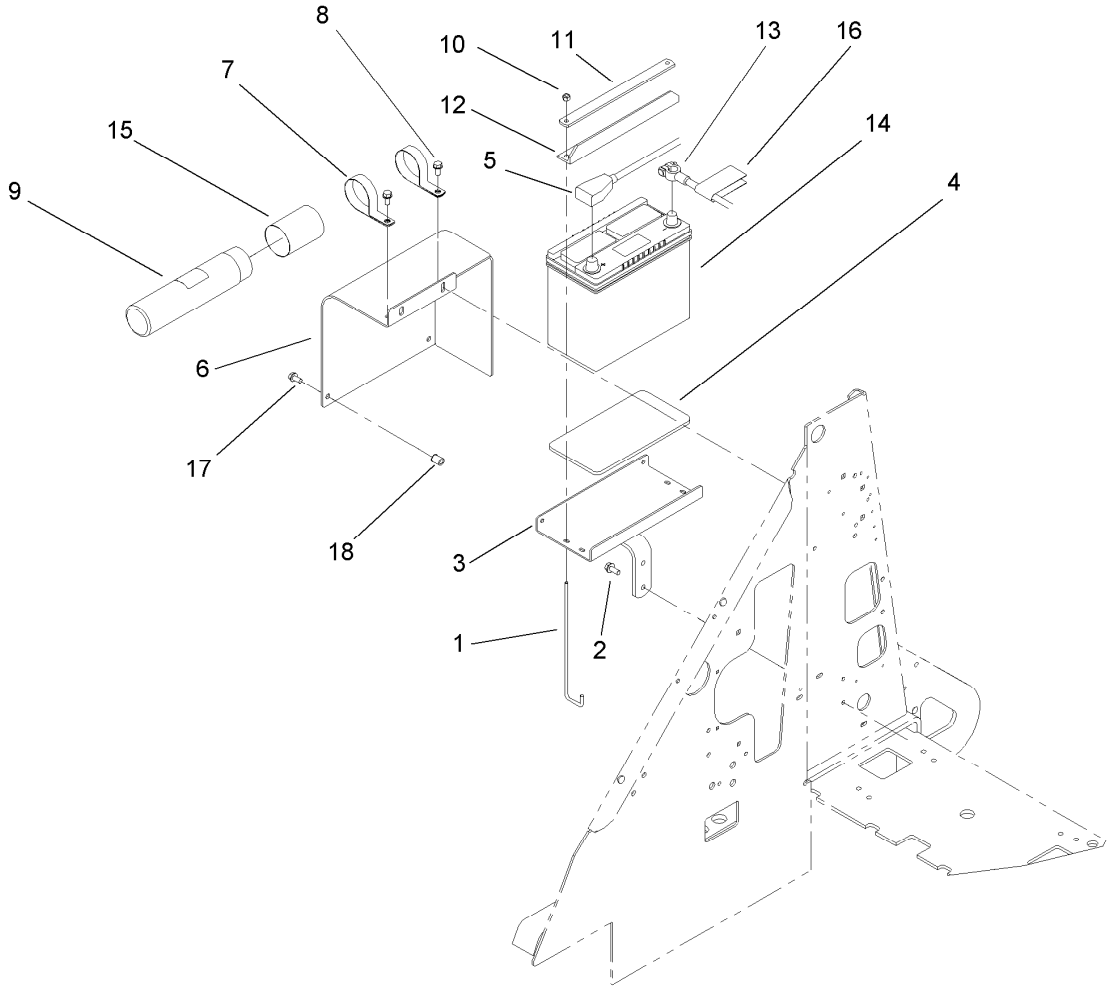

Battery Mount Assembly

Ref.	Part Number	Qty.	Description
1	99-5035	2	Retainer-Battery
2	32144-70	2	Screw-HWHTF
3	98-2665-03	1	Mount-Battery
4	99-5030	1	Pad-Battery
5	100-1708	1	Cable-Battery, Positive
6	98-2670-03	1	Cover-Battery
7	2412-133	2	Clamp-R
8	32144-14	4	Screw-HWHTF
9	104-7050	1	Tube-Manual
10	3296-42	2	Nut-Lock, NI
11	99-5008-01	1	Retainer-Battery
12	99-5039	1	Retainer-Battery
13	100-1709	1	Cable-Battery, Negative
14	99-1441	1	Battery
15	104-7048	1	Cap-Housing
16	107-9309	1	Decal-Instructions, Charging
17	3234-29	2	Screw-HHF
18	32148-7	2	Nut-Clinch

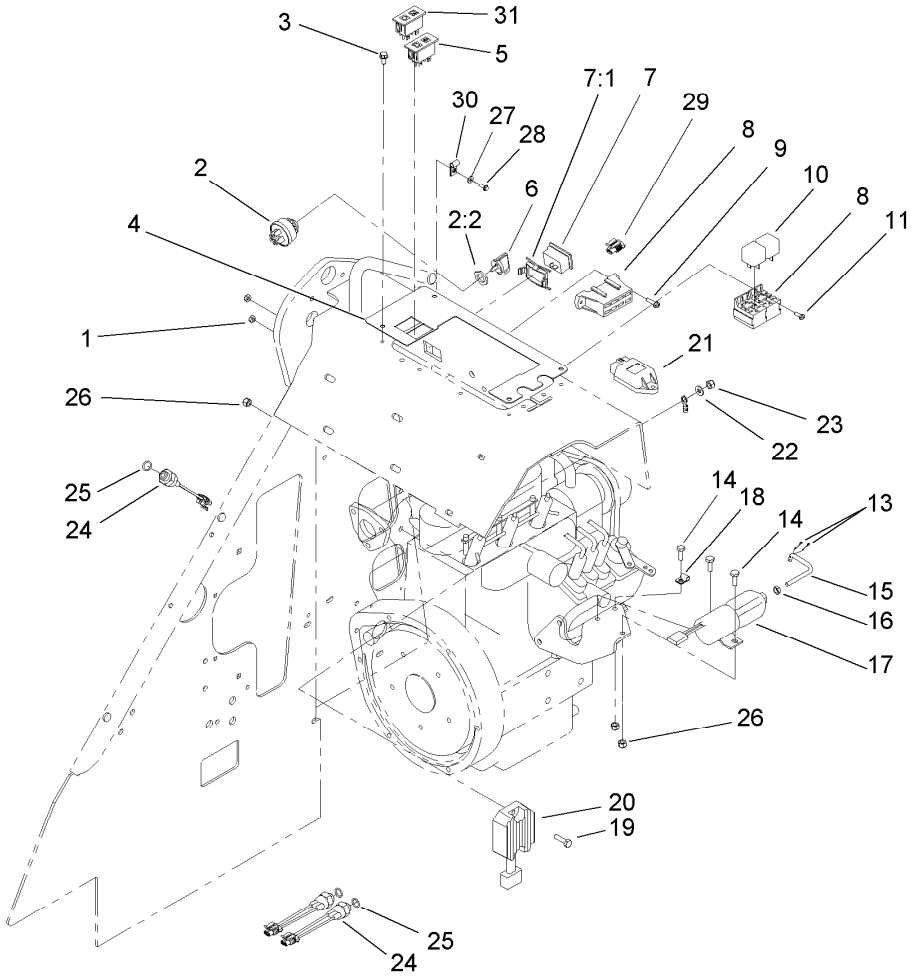

Electrical Component Assembly

Ref.	Part Number	Qty.	Description
1	3296-12	4	Nut-Lock, NI
2	88-9830	1	Key Switch ASM
2:2	218-461	1	Nut-HH
3	32144-4	4	Screw-HWH
4	105-8351-03	1	Plate-Cover
5	100-8070	1	Lamp-Warning
6	63-8360	2	Key-Ignition
7	104-7429	1	Hour Meter ASM
7:1	104-4234	1	Clip-Mounting
8	105-4069	1	Harness-Wire
9	32105-13	2	Screw-HWH
10	98-7249	2	Relay
11	32105-8	1	Screw-SHH
13	3272-1	2	Pin-Cotter
14	321-4	3	Screw-HH
15	105-6243	1	Rod-Linkage

Ref.	Part Number	Qty.	Description
16	3220-1	1	Nut-Jam
17	99-5006	1	Solenoid
18	2412-31	1	Clamp-Boden
19	321-6	3	Screw-HH
20	100-2057	1	Regulator ASM
21	98-7611	1	Controller-Glow
22	100-2215	1	Washer-Spring
23	100-2171	1	Nut-Hex
24	72-4310	3	Switch-Ball
25	237-42	3	O-Ring
26	3296-42	6	Nut-Lock, NI
27	3256-21	1	Washer-Flat
28	32144-87	1	Screw-HWHTF
29	99-1433	2	Connector-Female
30	2412-72	1	Clip-Closed, Insulated
31	100-8071	1	Lamp-Warning

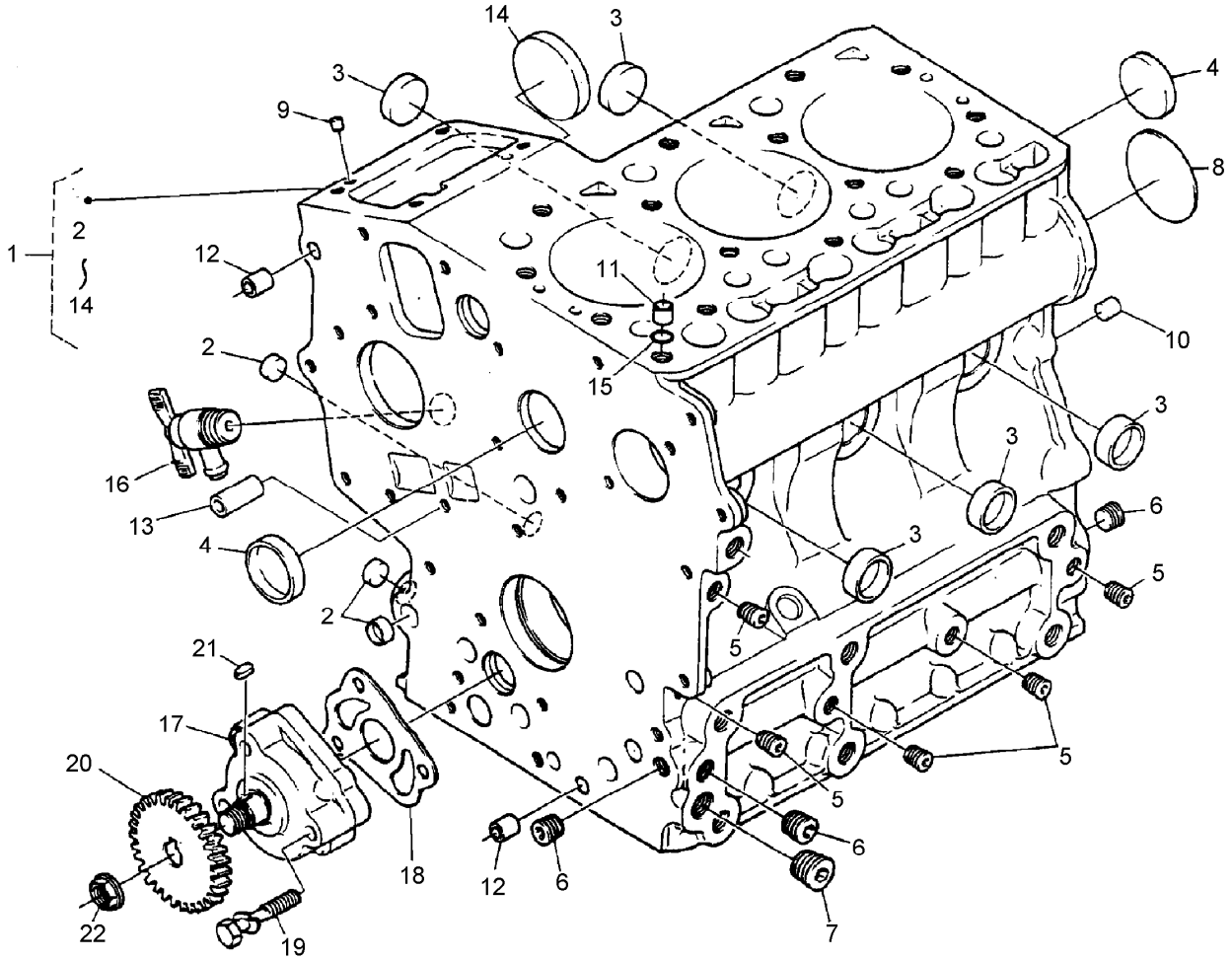

Crankcase Assembly

Ref.	Part Number	Qty.	Description
1	112-2801	1	Crankcase ASM
2	100-2019	3	Cap-Sealing
3	100-2020	5	Cap-Sealing
4	98-9398	2	Cap-Sealing
5	98-7540	5	Plug
6	98-7487	3	Plug
7	98-7488	1	Plug
8	100-1851	1	Plug-Expansion
9	98-9375	2	Pin-Straight
10	98-9377	2	Pin-Straight
11	98-7506	1	Pin-Pipe
12	98-9387	2	Pin-Pipe
13	100-2051	2	Pin-Pipe
14	100-1991	1	Cover-Fuel, Camshaft
15	98-7509	1	O-Ring
16	98-9436	1	Drain Cock ASM
17	112-2802	1	Oil Pump ASM
18	100-2003	1	Gasket-Pump, Oil
19	100-1923	3	Bolt
20	100-1893	1	Gear-Drive, Oil Pump
21	98-7658	1	Key-Feather
22	100-1779	1	Nut-Flange

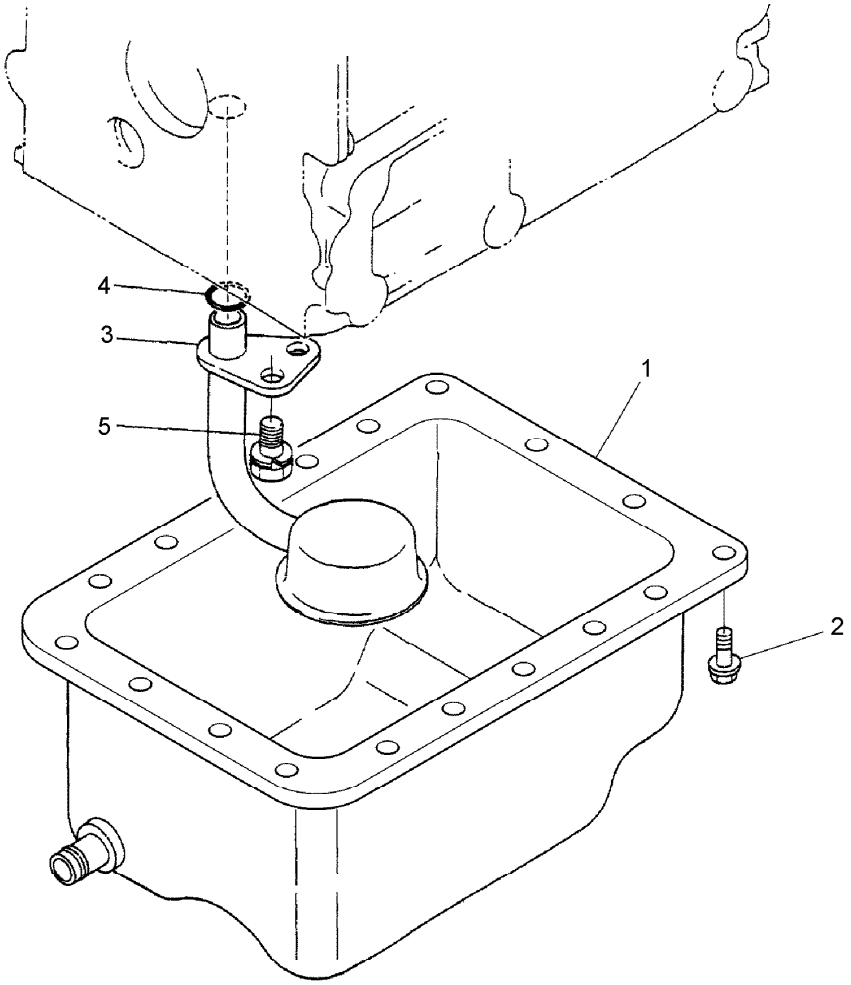

Oil Pan Assembly

Ref.	*Part Number*	*Qty.*	*Description*
1	100-2239	1	Pan-Oil
2	98-9350	18	Bolt
3	100-2001	1	Strainer-Pickup, Oil
4	105-3776	1	O-Ring
5	100-9195	1	Bolt

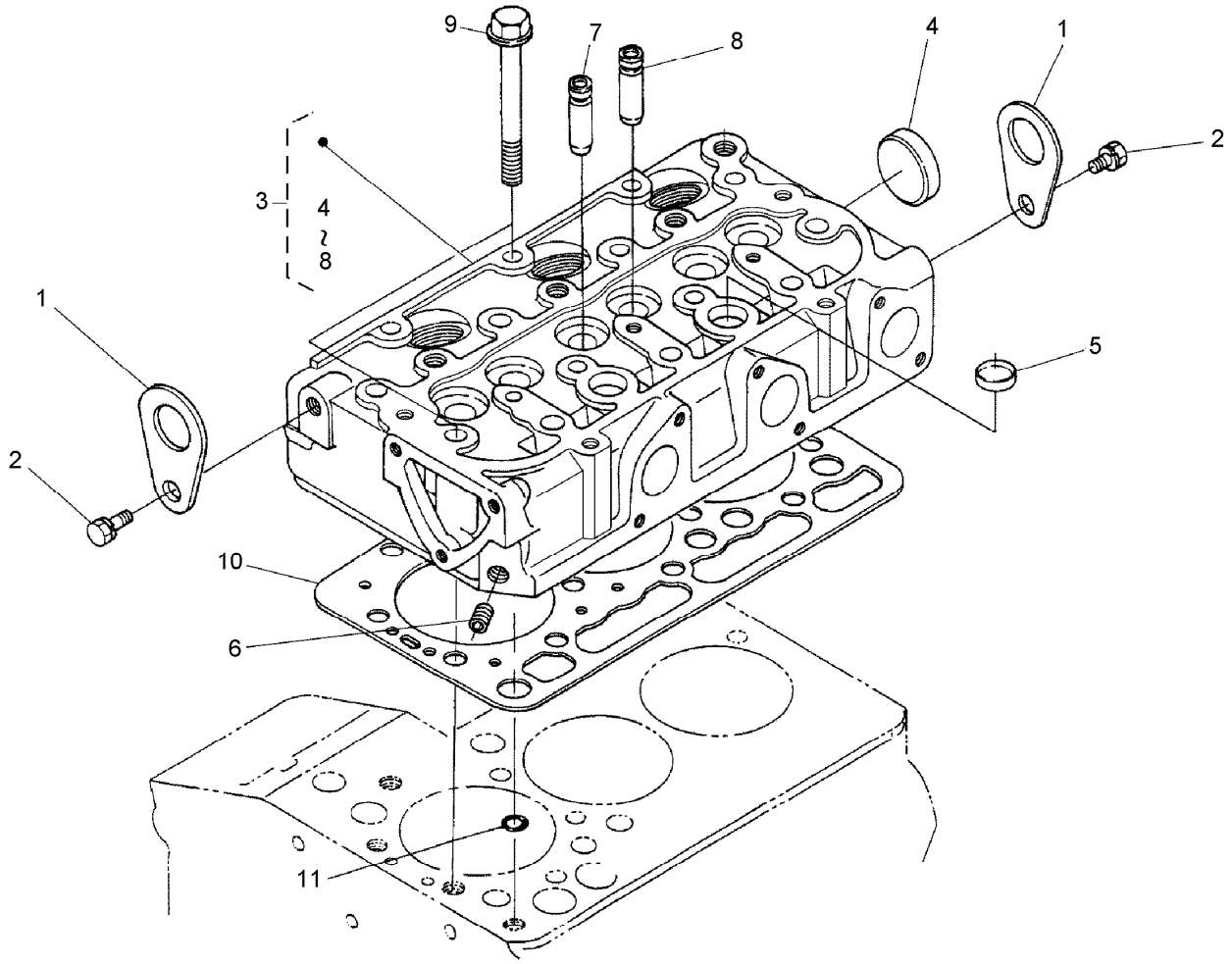

Cylinder Head Assembly

Ref.	Part Number	Qty.	Description
1	98-7531	2	Hook-Engine
2	98-7526	2	Bolt
3	112-2803	1	Cylinder Head ASM
4	98-9395	1	*obs* Cap-Sealing
5	98-9389	2	Cap-Sealing
6	98-7540	1	Plug
7	100-1882	3	Guide-Valve, Inlet
8	100-1883	3	Guide-Valve, Exhaust
9	100-1820	14	Bolt-Head, Cylinder
10	100-2043	1	Gasket-Head, Cylinder
11	98-7509	1	O-Ring
99	98-2651	1	Heater-Head, Cylinder ●

● Not illustrated

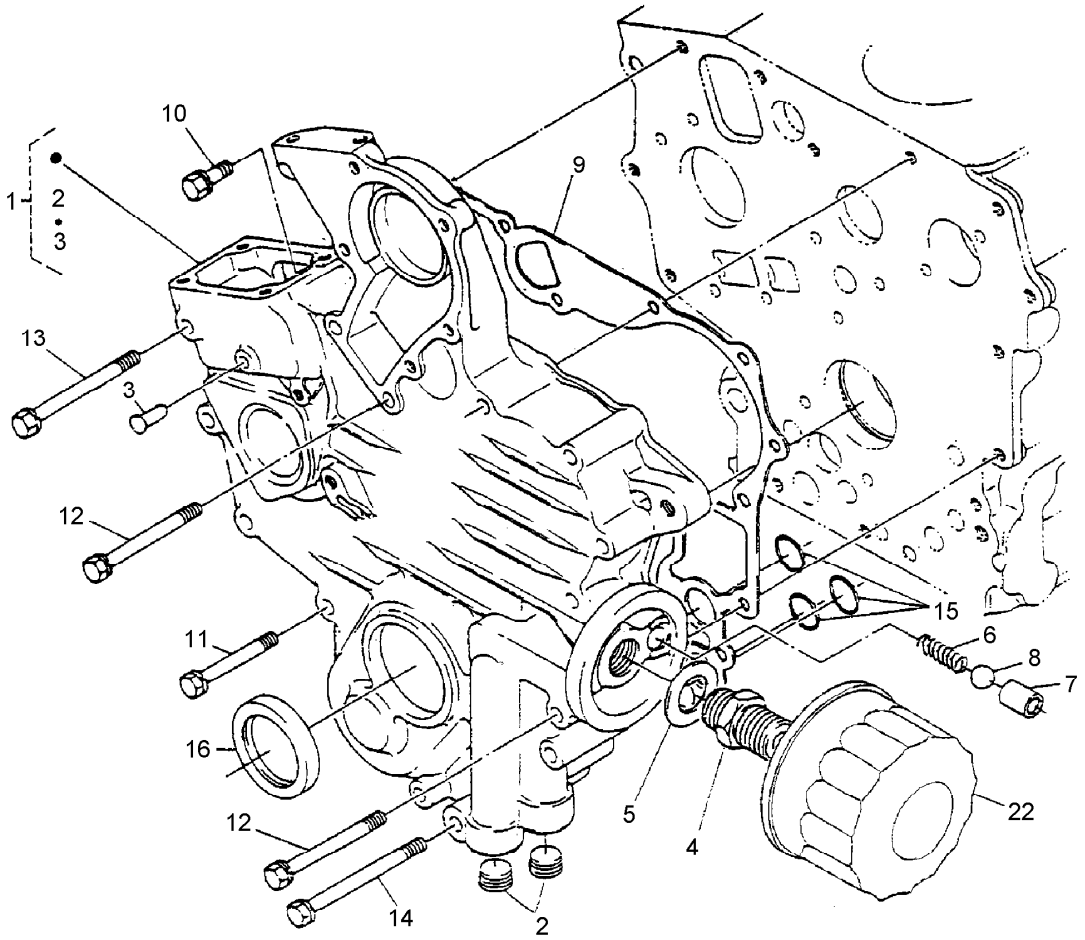

Gear Case and Oil Filter Assembly

Ref.	*Part Number*	*Qty.*	*Description*
1	112-2804	1	Gear Case ASM
2	98-7488	1	Plug
3	100-1910	1	Pin-Spring, Start
4	98-9388	1	Joint-Pipe
5	100-1926	1	Washer-Plain
6	100-2004	1	Spring
7	100-1894	1	Seat-Valve
8	100-1792	1	Ball
9	112-2805	1	Gasket-Case, Gear
10	98-7605	1	Bolt
11	105-3797	8	Bolt
12	100-1922	5	Bolt
13	100-1766	1	Bolt
14	100-1767	1	Bolt
15	100-1785	1	O-Ring
16	100-1971	1	Seal-Oil
22	100-1892	1	Cartridge-Filter, Oil

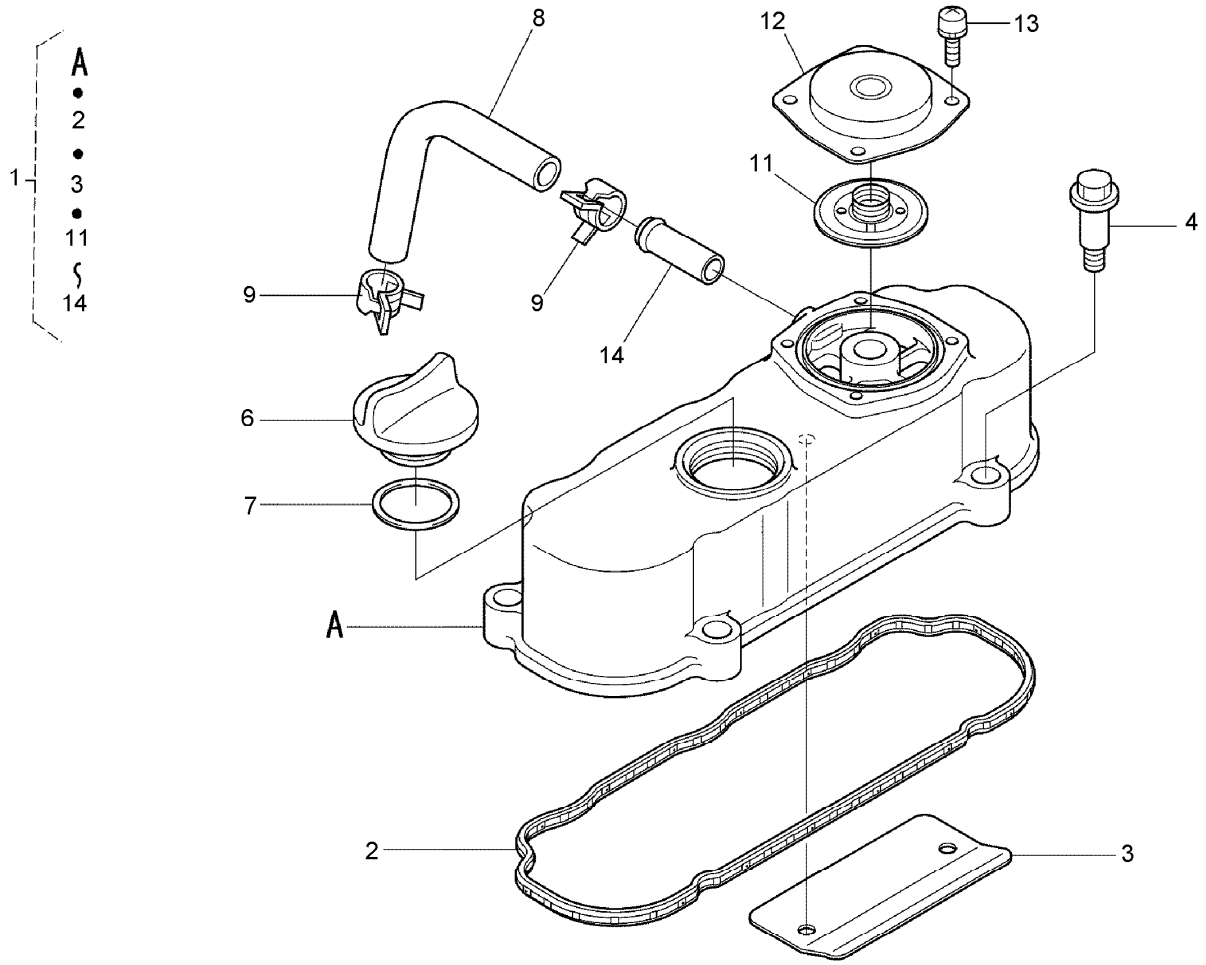

Head Cover Assembly

Ref.	*Part Number*	*Qty.*	*Description*
1	112-2806	1	Cylinder Head Cover ASM
2	112-2807	1	Gasket-Cover, Head
3	112-2808	1	Shield-Breather
4	108-7063	4	Bolt
6	107-9075	1	Plug-Filler, Oil
7	99-3446	1	O-Ring
8	112-2809	1	Tube-Breather
9	110-3712	2	Clamp-Hose
11	112-2810	1	Valve-Breather
12	108-2862	1	Cover-Breather
13	98-9364	4	Screw (With Washer)
14	98-9580	1	Pipe-Return, Water

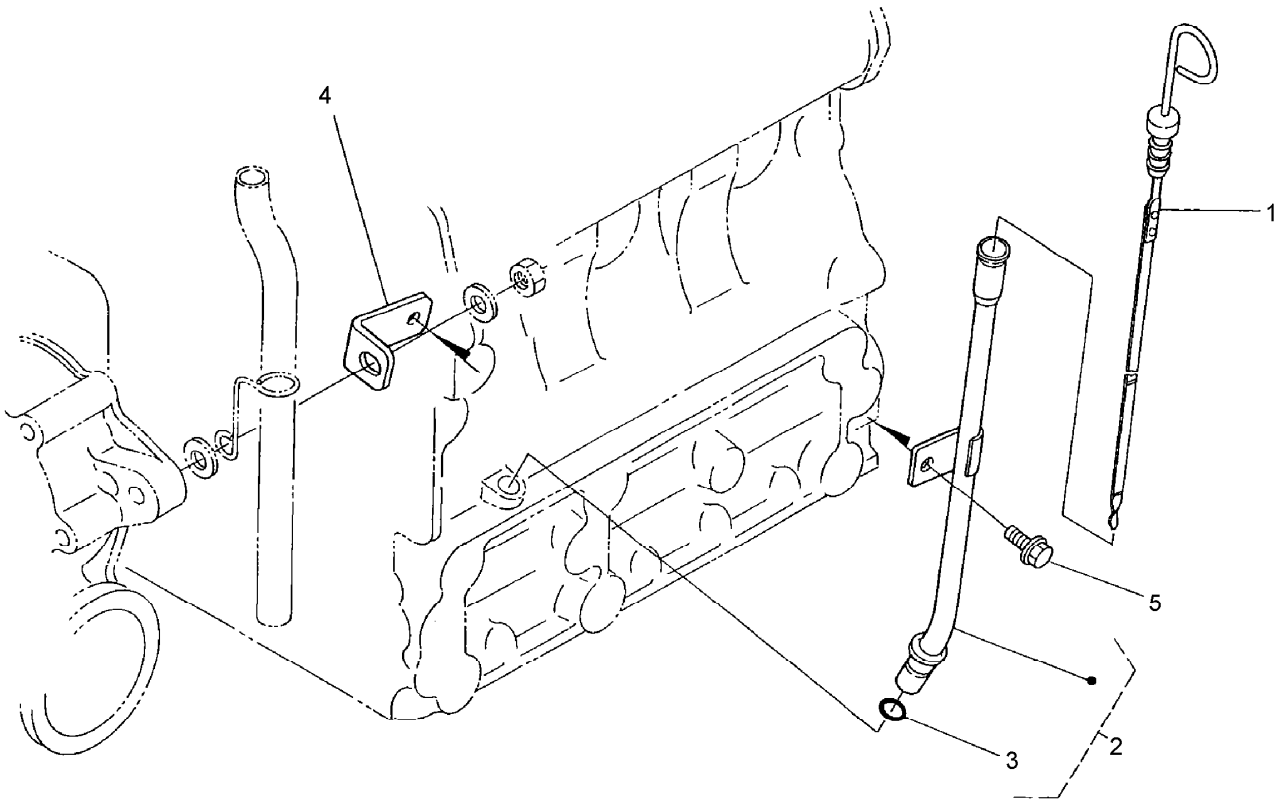

Dipstick and Guide Assembly

Ref.	*Part Number*	*Qty.*	*Description*
1	112-2811	1	Gauge-Oil
2	100-2249	1	Oil Gauge Guide ASM
3	98-9374	1	*obs* O-Ring
4	100-2248	1	Support-Guide, Gauge
5	100-1774	1	Bolt-Flange

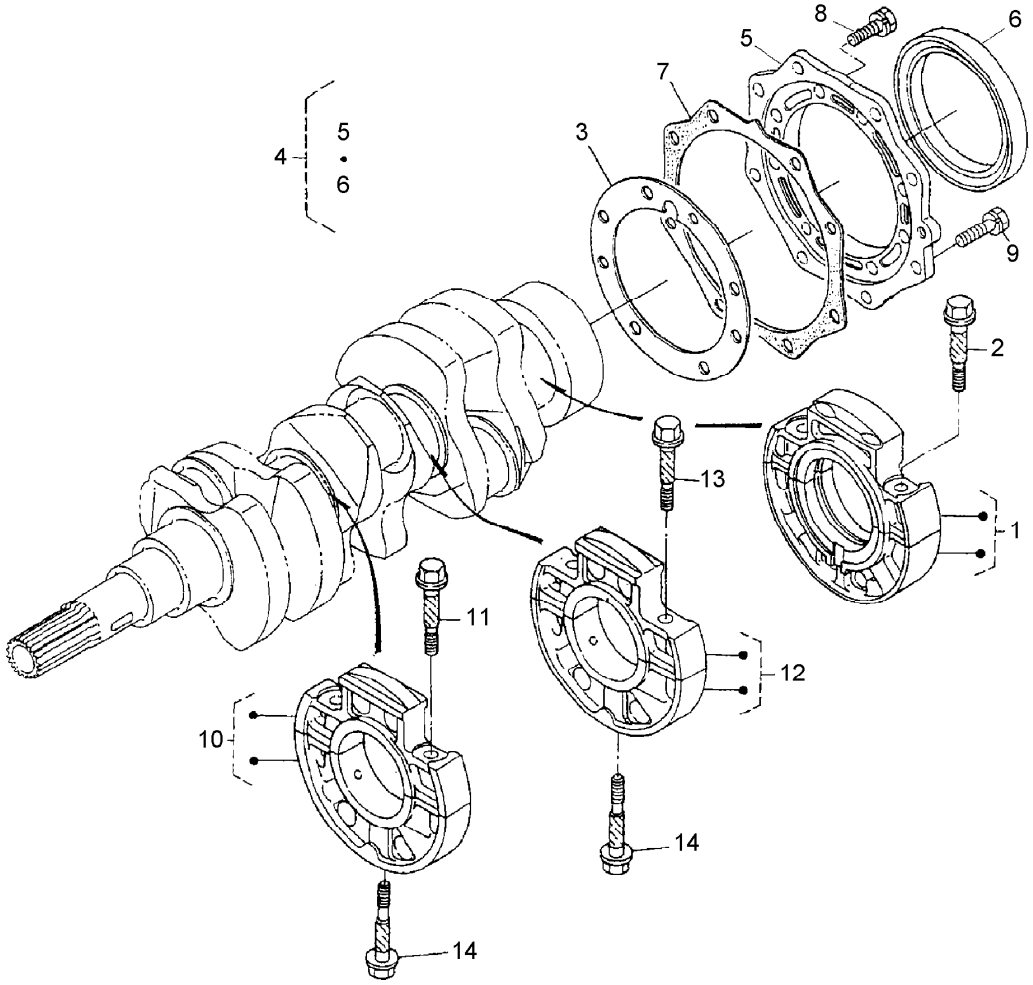

Main Bearing Case Assembly

Ref.	Part Number	Qty.	Description
1	100-1988	1	Main Bearing Case ASM
2	100-1757	2	Bolt-Case, Bearing
3	112-2812	1	Gasket-Case, Bearing
4	100-2233	1	Bearing Case Cover ASM
5	100-1875	1	Cover-Case, Bearing
6	100-2055	1	Seal-Oil
7	100-1876	1	Gasket-Cover, Case
8	98-7568	8	Bolt
9	100-1750	8	Bolt
10	100-1987	1	Main Bearing Case ASM
11	100-1757	2	Bolt-Case, Bearing
12	100-2027	1	Main Bearing Case ASM
13	100-1757	2	Bolt-Case, Bearing
14	100-1874	2	Bolt-Case, Bearing

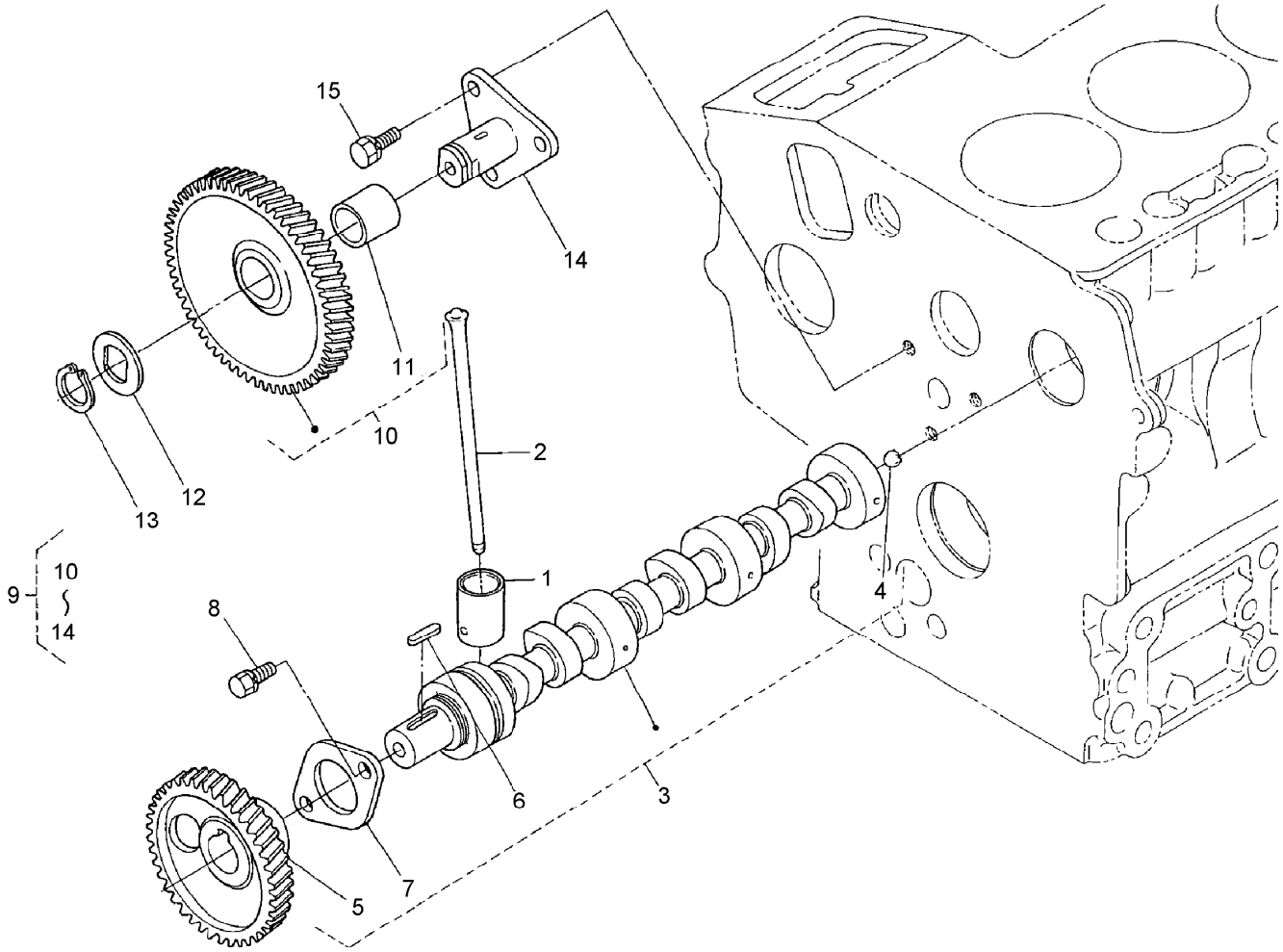

Camshaft and Idle Gear Shaft Assembly

Ref.	*Part Number*	*Qty.*	*Description*
1	100-1990	6	Tappet
2	100-1989	6	Rod-Push
3	100-2162	1	Camshaft ASM
4	98-7473	1	Ball
5	100-2163	1	Gear-Cam
6	98-9378	1	Key-Feather
7	100-1887	1	Stopper-Camshaft
8	98-9350	2	Bolt
9	100-2240	1	Idle Gear ASM
10	100-1966	1	Gear-Idle
11	100-1968	1	Bushing
12	100-1970	1	Collar-Gear, Idle
13	100-1969	1	Ring-Snap
14	100-1967	1	Shaft-Gear, Idle
15	98-9351	3	Bolt

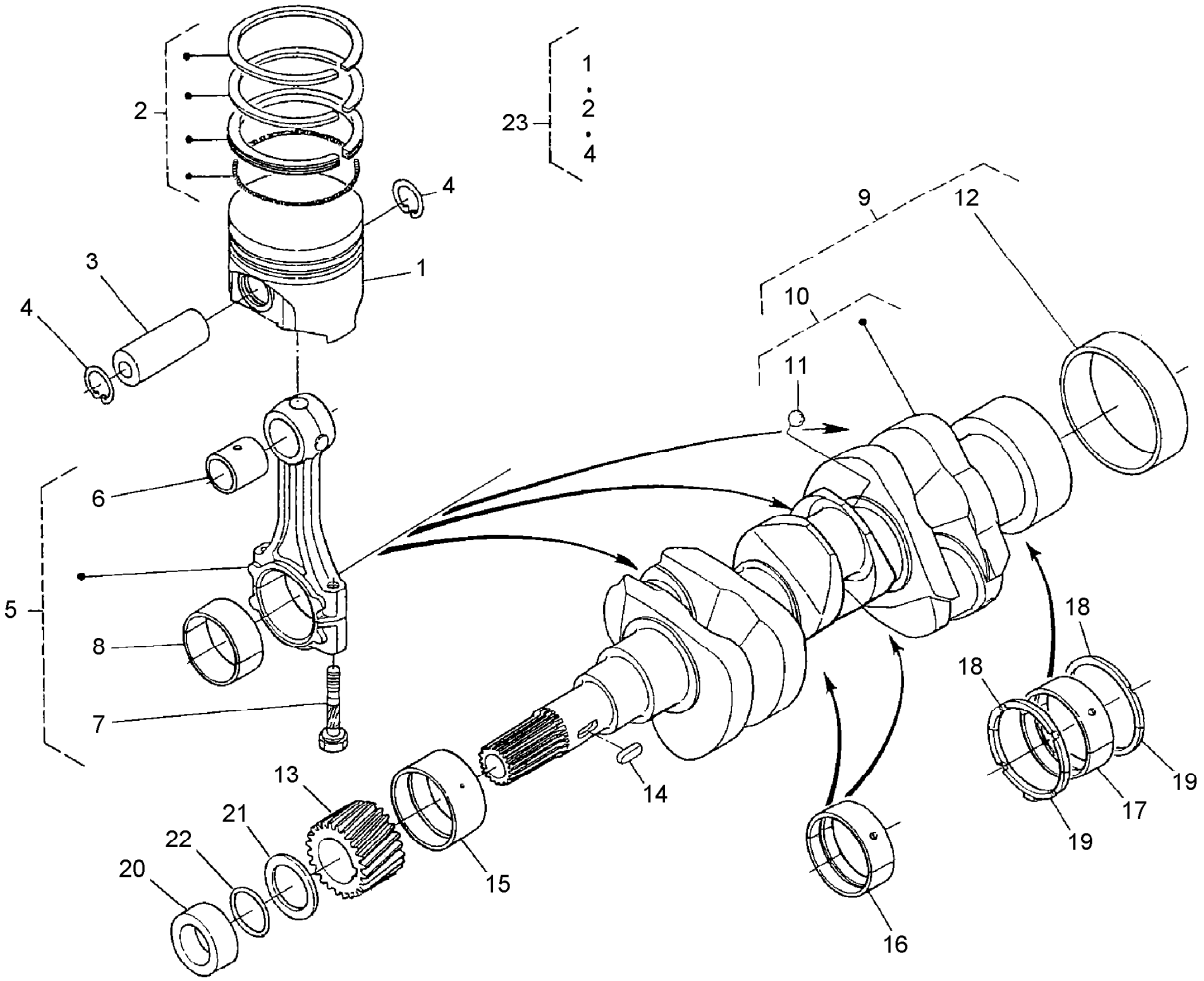

Piston and Crankshaft Assembly

Ref.	Part Number	Qty.	Description
1	100-1994	3	Piston (STD)
1	100-1996	3	Piston (+0.25MM)
2	100-2158	3	Piston Ring ASM
2	100-2159	3	Piston Ring ASM
3	112-2813	3	Pin-Piston
4	100-1835	6	Circlip-Internal
5	100-1998	3	Connecting Rod ASM
6	112-2814	3	Bushing-Pin, Piston
7	100-1999	6	Bolt-Rod, Connecting
8	100-1942	3	Metal-Crankpin (-0.20Mm)
8	100-1943	3	Metal-Crankpin (-0.40Mm)
8	100-2000	3	Metal-Crankpin (STD)
9	100-2161	1	Crankshaft ASM
10	100-2160	1	Crankshaft
11	100-1791	3	Ball
12	100-2054	1	Sleeve-Crankshaft
13	100-1891	1	Gear-Crankshaft
14	100-1752	1	Key-Feather
15	100-1944	1	Crankshaft-Metal (STD)
15	100-1947	1	Crankshaft-Metal (-0.2MM)
15	100-1948	1	Crankshaft-Metal (-0.4MM)
16	100-1945	2	Crankshaft-Metal (-0.2MM Set)
16	100-1946	2	Crankshaft-Metal (-0.4MM Set)
16	100-2033	2	Crankshaft-Metal (STD Set)
17	100-1870	1	Crankshaft-Metal (-0.2MM Set)
17	100-1871	1	Crankshaft-Metal (-0.4MM Set)
17	100-2032	1	Crankshaft-Metal (STD Set)
18	100-1836	2	Metal-Side (STD)
18	100-1838	2	Metal-Side (+0.20MM)
18	100-1839	2	Metal-Side (+0.40MM)
19	100-1837	2	Metal-Side (STD)
19	100-1840	2	Metal-Side (+0.2MM)
19	100-1841	2	Metal-Side (+0.4MM)
20	100-1890	1	Collar-Crankshaft
21	100-1974	1	Slinger-Oil
22	100-2209	1	O-Ring
23	100-2164	1	Piston Kit

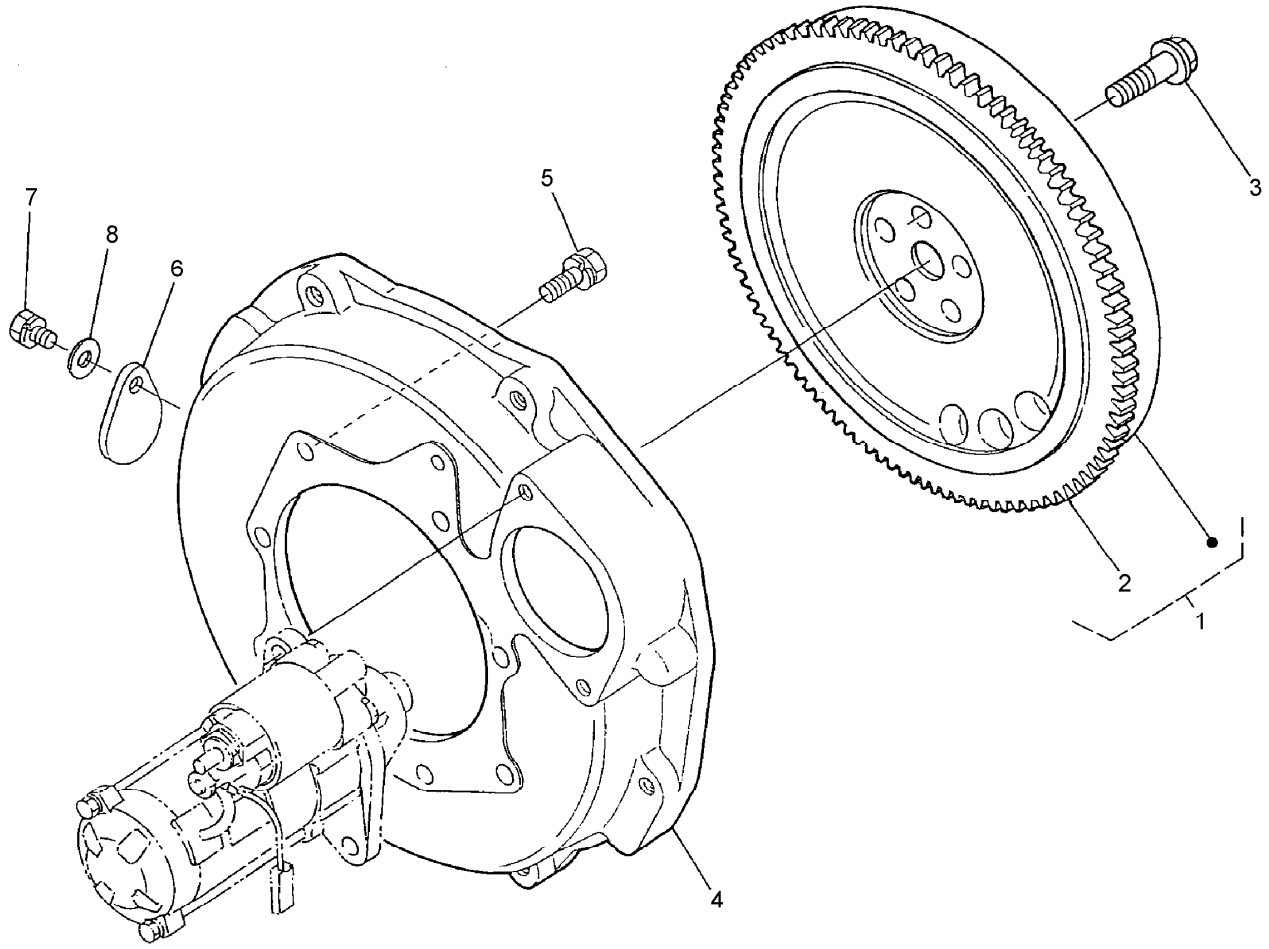

Flywheel Assembly

Ref.	Part Number	Qty.	Description
1	112-2815	1	Flywheel ASM
2	112-2816	1	Gear-Ring
3	100-1930	1	Bolt-Flywheel
4	100-2234	1	Housing-Flywheel
5	98-9359	10	Bolt
6	100-2177	1	Cover
7	100-9195	1	Bolt
8	98-7660	1	Washer-Plain

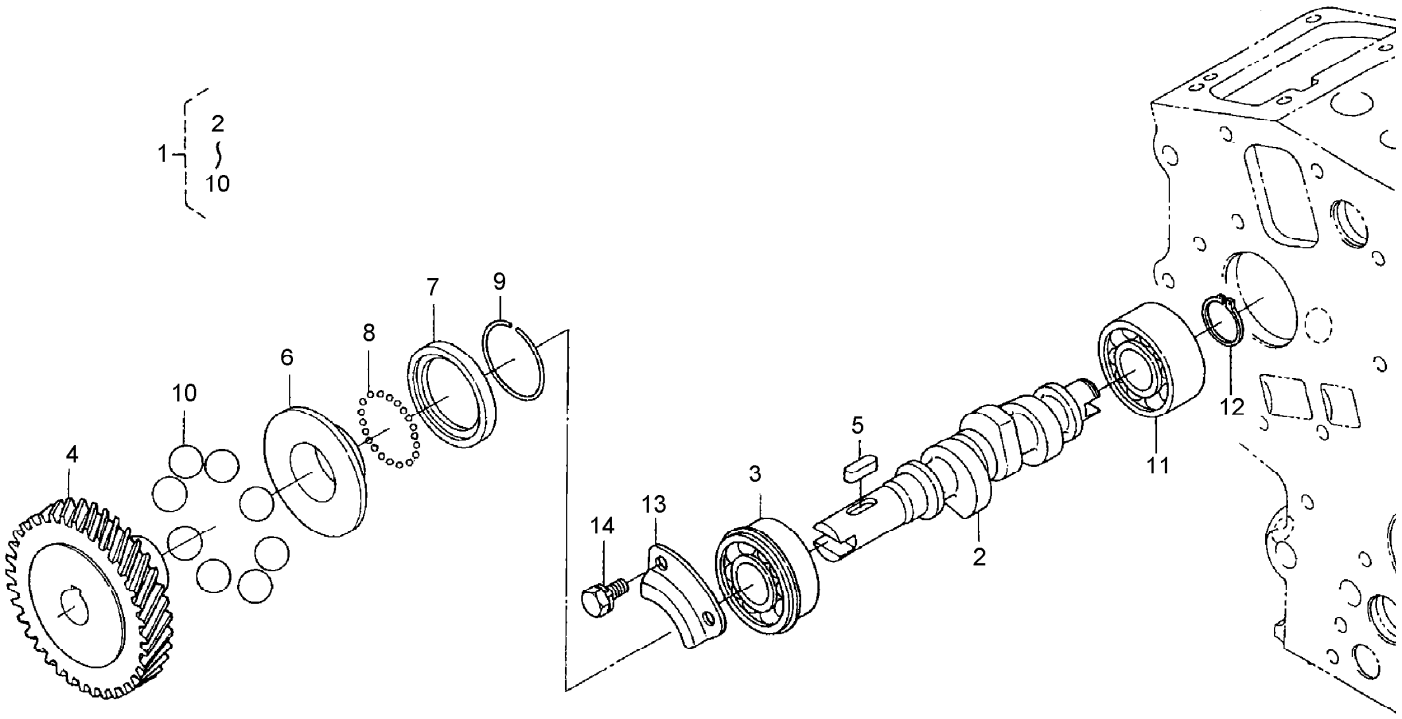

Fuel Camshaft and Governor Shaft Assembly

Ref.	*Part Number*	*Qty.*	*Description*
1	112-2817	1	Camshaft ASM
2	112-2818	1	Camshaft-Fuel
3	100-1795	1	Bearing-Ball
4	100-2006	1	Gear-Pump, Injection
5	100-1752	1	Key-Feather
6	100-1903	1	Sleeve-Governor
7	100-1904	1	Case-Ball, Governor
8	100-1790	32	Ball
9	100-1843	1	Circ-Clip
10	100-1793	8	Ball
11	112-2819	1	Bearing-Ball
12	100-1784	1	Circ-Clip, External
13	100-1888	1	Stopper-Fuel, Camshaft
14	98-9350	2	Bolt

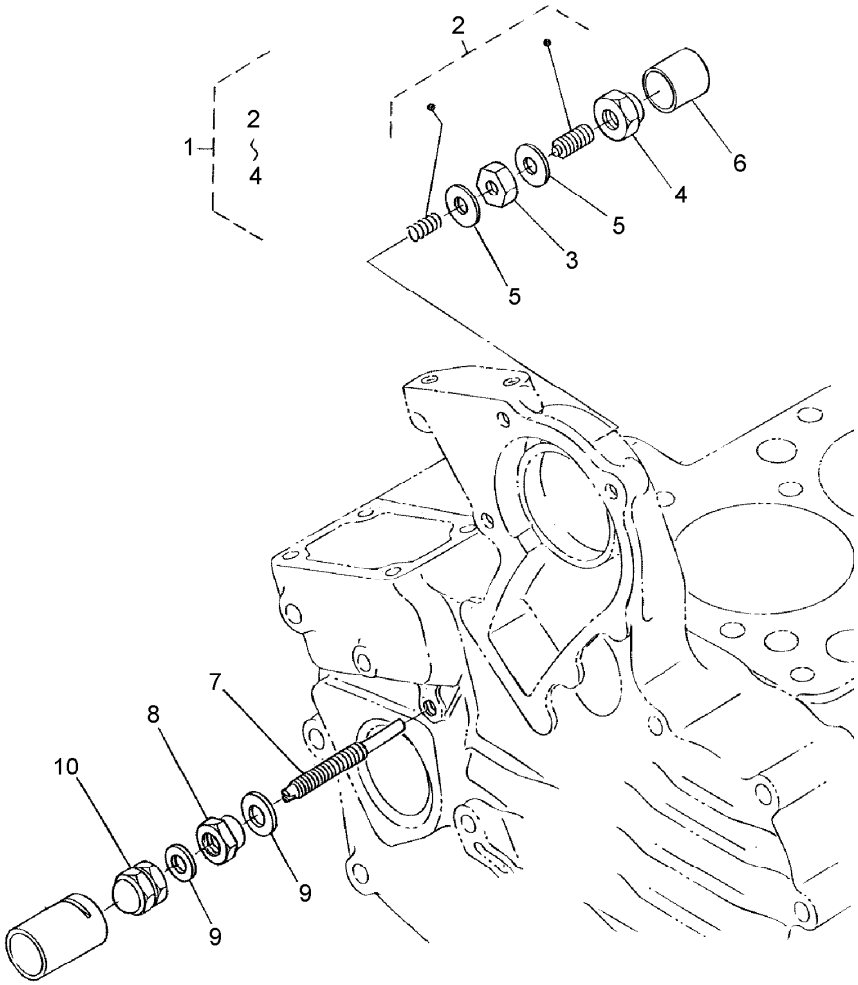

Idle Apparatus Assembly

Ref.	*Part Number*	*Qty.*	*Description*
1	100-1898	1	Idle Apparatus ASM
2	100-1899	1	Adjusting Bolt ASM
3	100-1846	1	Nut
4	100-1901	1	Nut-Cap
5	98-7428	2	Gasket
6	100-1902	1	Cap
7	112-2820	1	Bolt-Adjusting
8	100-2175	1	Nut-Lock
9	107-9081	2	Gasket
10	98-9441	1	Nut-Cap

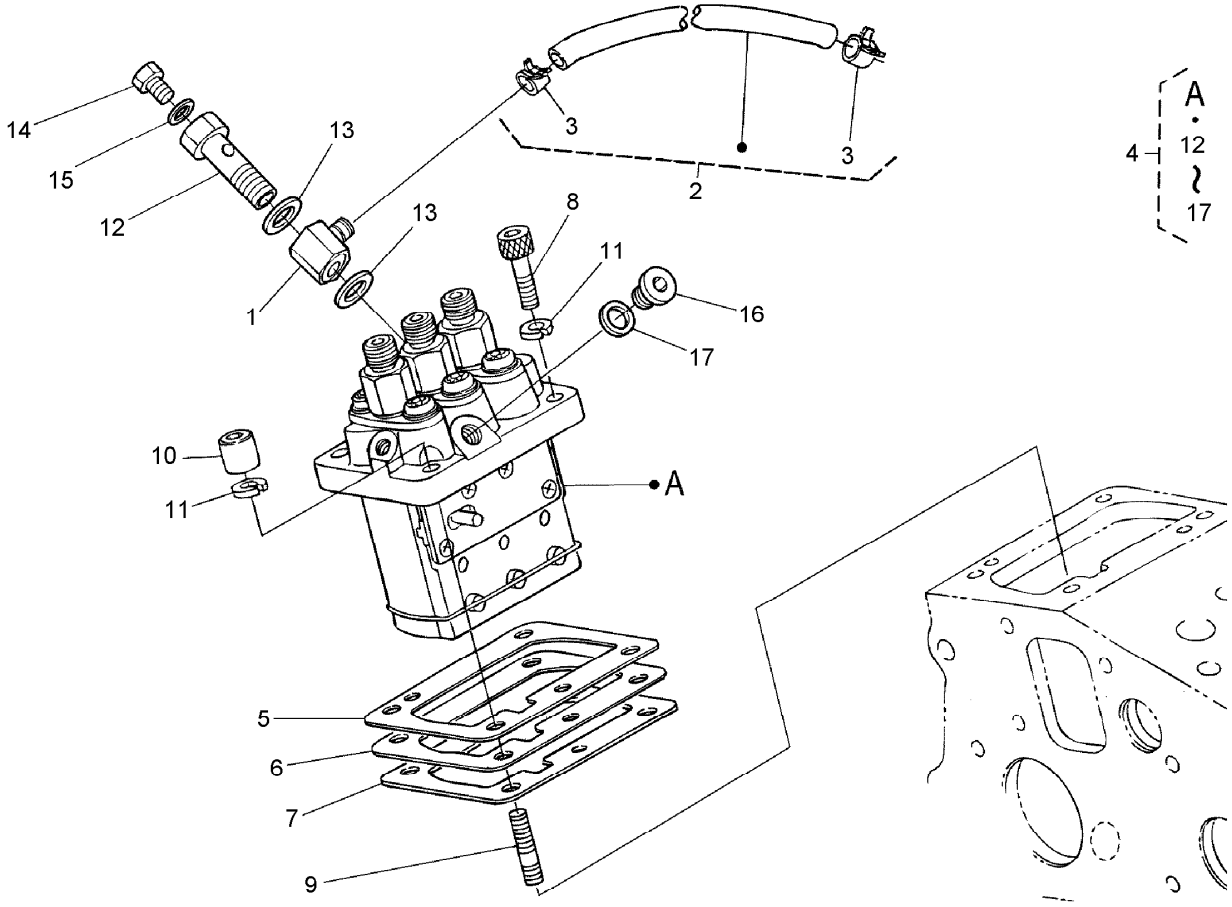

Injection Pump Assembly

Ref.	Part Number	Qty.	Description
1	100-1928	1	Joint-Eye
2	100-1842	1	Fuel Pipe ASM
3	100-2217	2	Clip-Pipe
4	100-1759	1	Injection Pump ASM
5	98-9456	1	Shim-Injection (0.20MM)
6	98-9457	1	Shim-Injection (0.25MM)
7	98-9458	1	Shim-Injection (0.30MM)
8	98-9361	2	Bolt-HSH
9	98-9438	2	Stud
10	98-9440	2	Nut-Cap
11	98-7699	4	Washer-Spring
12	100-1896	1	Screw-Hollow
13	98-9445	2	Gasket
14	98-9430	1	Screw
15	98-9446	1	Gasket
16	98-9466	1	Plug
17	98-9451	1	Gasket

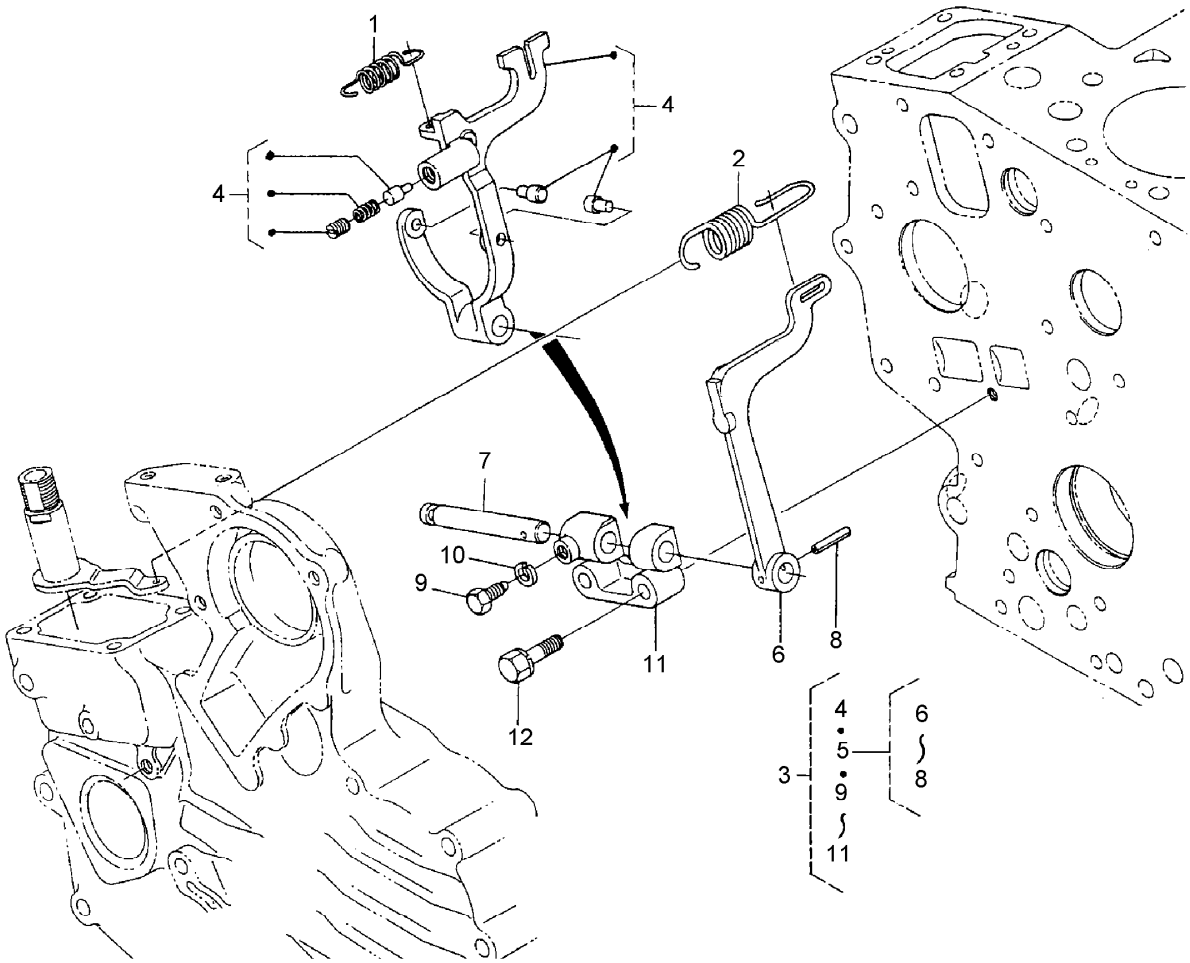

Governor Assembly

Ref.	Part Number	Qty.	Description
1	100-1911	1	Spring-Start
2	100-2059	1	Spring-Governor
3	100-1981	1	Fork Lever ASM
4	100-2241	1	Lever-Fork
5	100-1905	1	Fork Lever ASM
6	100-1907	1	Lever-Fork
7	100-1908	1	Shaft-Lever, Fork
8	100-1751	1	Pin-Spring
9	100-1845	1	Bolt
10	100-2204	1	Washer-Spring
11	100-1909	1	Holder-Lever, Fork
12	100-1763	2	Bolt

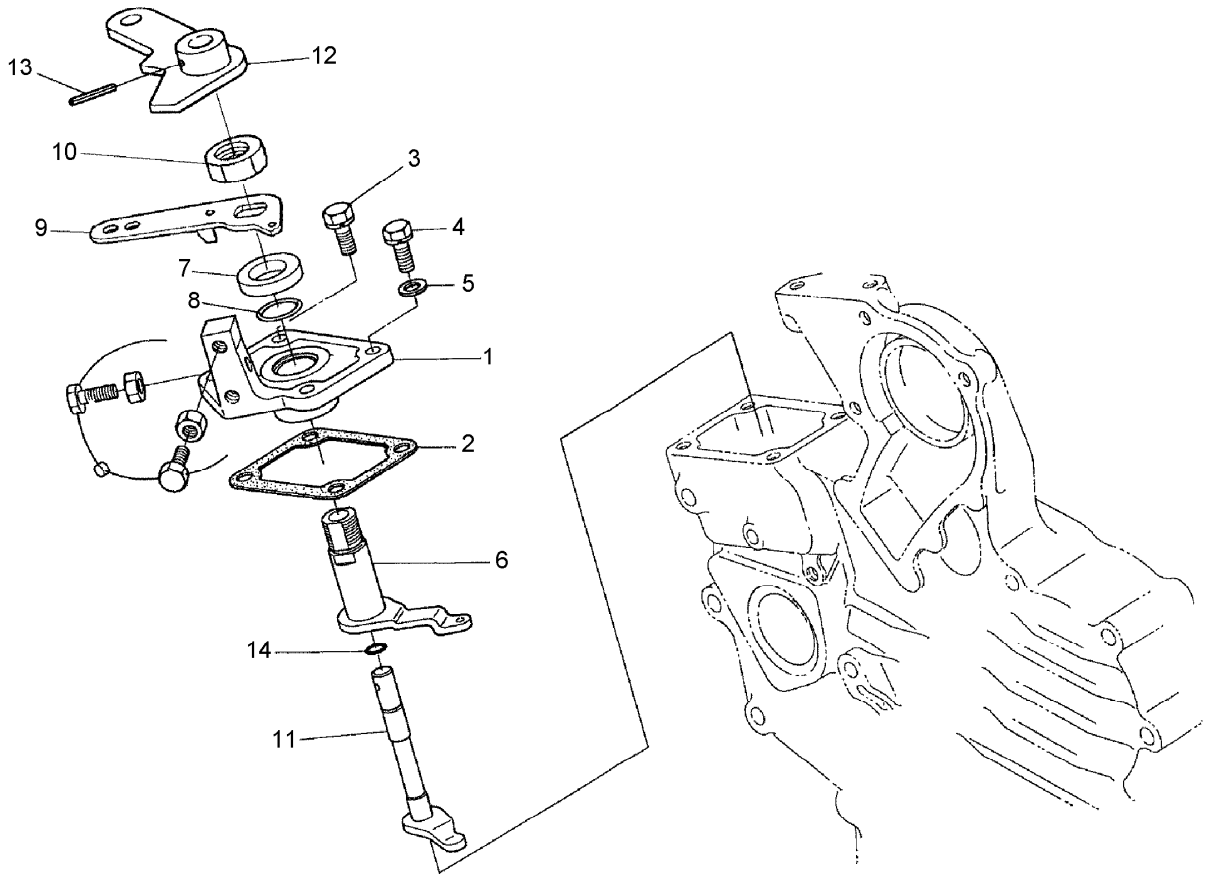

Speed Control Plate Assembly

Ref.	*Part Number*	*Qty.*	*Description*
1	112-2821	1	Plate-Control, Speed
2	100-1914	1	Gasket
3	98-7605	2	Bolt
4	100-1769	2	Bolt
5	98-7654	2	Gasket
6	112-2822	1	Lever-Governor
7	112-2823	1	Collar
8	100-2208	1	O-Ring
9	112-2824	1	Lever-Control, Speed
10	112-2825	1	Nut-Control, Speed
11	112-2826	1	Shaft-Lever
12	112-2827	1	Lever-Stop, Engine
13	110-3777	1	Pin-Spring
14	100-2207	1	O-Ring

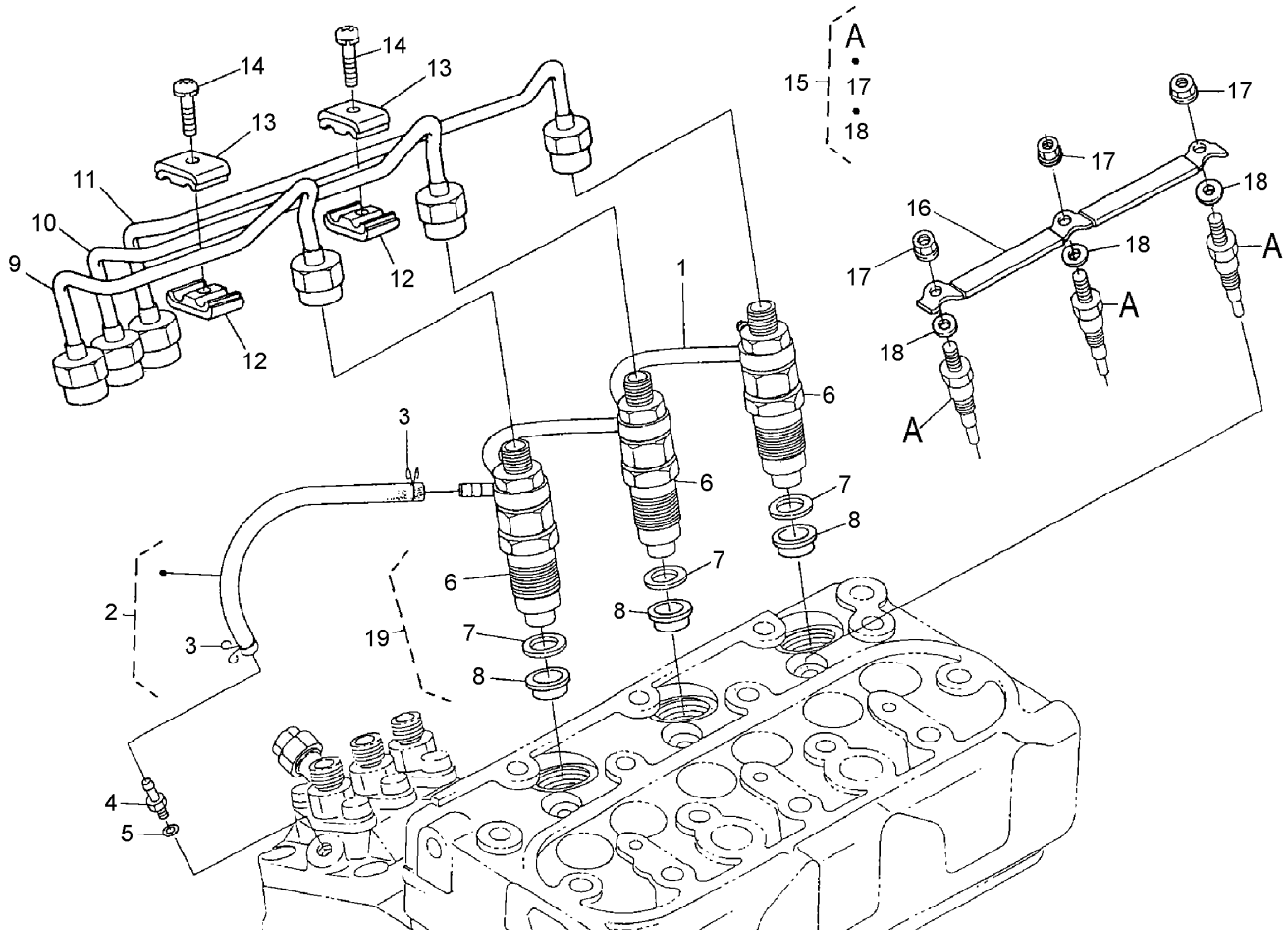

Nozzle Holder and Glow Plug Assembly

Ref.	*Part Number*	*Qty.*	*Description*
1	100-1960	1	Over Flow Pipe ASM
2	98-9420	1	Overflow Pipe ASM
3	98-7671	2	Clip-Pipe
4	98-9431	1	Screw-Bleeder, Air
5	98-7654	1	Gasket
6	100-1758	3	Nozzle Holder ASM
7	98-7676	3	Gasket
8	98-7677	3	Seal-Heat
9	112-2828	1	Pipe-Injection
10	112-2829	1	Pipe-Injection
11	112-2830	1	Pipe-Injection
12	98-7682	2	Clamp-Pipe
13	98-7683	2	Clamp-Pipe
14	98-7684	2	Screw (W/Washer)
15	112-2831	3	Plug-Glow
16	100-2037	1	Cord-Plug, Glow
17	99-8377	3	Nut-Flange
18	99-8378	3	Washer-Plain
19	100-1982	3	Nozzle Holder Kit

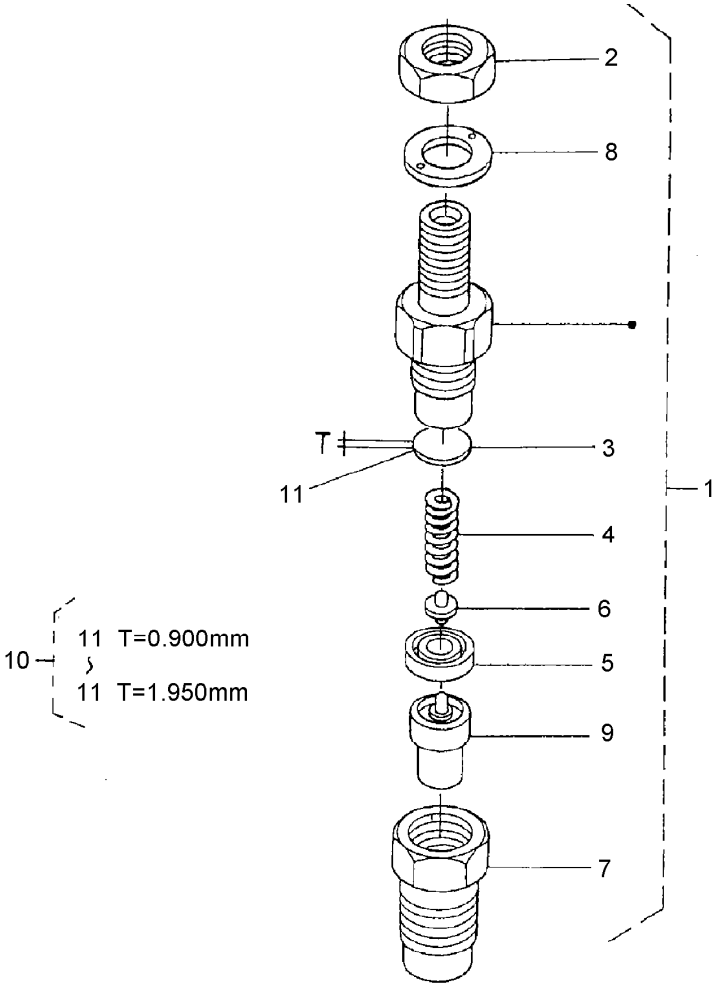

Nozzle Holder Assembly

Ref.	Part Number	Qty.	Description
1	100-1758	3	Nozzle Holder ASM
2	98-7613	3	Nut
3	98-7642	3	Washer-Adjusting (0.900Mm)
4	98-7647	3	Spring-Nozzle
5	98-7665	3	Spacer-Distance
6	98-7666	3	Rod-Push
7	100-2242	3	Nut-Nozzle
8	98-7668	3	Washer
9	100-2009	3	Piece-Nozzle
10	98-9448	3	Adjusting Washer ASM
11	98-7642	3	Washer-Adjusting (0.900Mm)
11	98-7841	3	Washer-Adjusting (0.925Mm)
11	98-7842	3	Washer-Adjusting (0.950Mm)
11	98-7843	3	Washer-Adjusting (0.975Mm)
11	98-7844	3	Washer-Adjusting (1.000Mm)
11	98-7845	3	Washer-Adjusting (1.025Mm)
11	98-7846	3	Washer-Adjusting (1.050Mm)
11	98-7847	3	Washer-Adjusting (1.075MM)
11	98-7848	3	Washer-Adjusting (1.100MM)
11	98-7849	3	Washer-Adjusting (1.125MM)
11	98-7850	3	Washer-Adjusting (1.150MM)
11	98-7851	3	Washer-Adjusting (1.175MM)
11	98-7852	3	Washer-Adjusting (1.200MM)
11	98-7853	3	Washer-Adjusting (1.225MM)
11	98-7854	3	Washer-Adjusting (1.250MM)
11	98-7855	3	Washer-Adjusting (1.275MM)
11	98-7856	3	Washer-Adjusting 1.300MM)
11	98-7857	3	Washer-Adjusting (1.325MM)
11	98-7858	3	Washer-Adjusting (1.350MM)
11	98-7859	3	Washer-Adjusting (1.375MM)
11	98-7860	3	Washer-Adjusting (1.400MM)
11	98-7861	3	Washer-Adjusting (1.425MM)

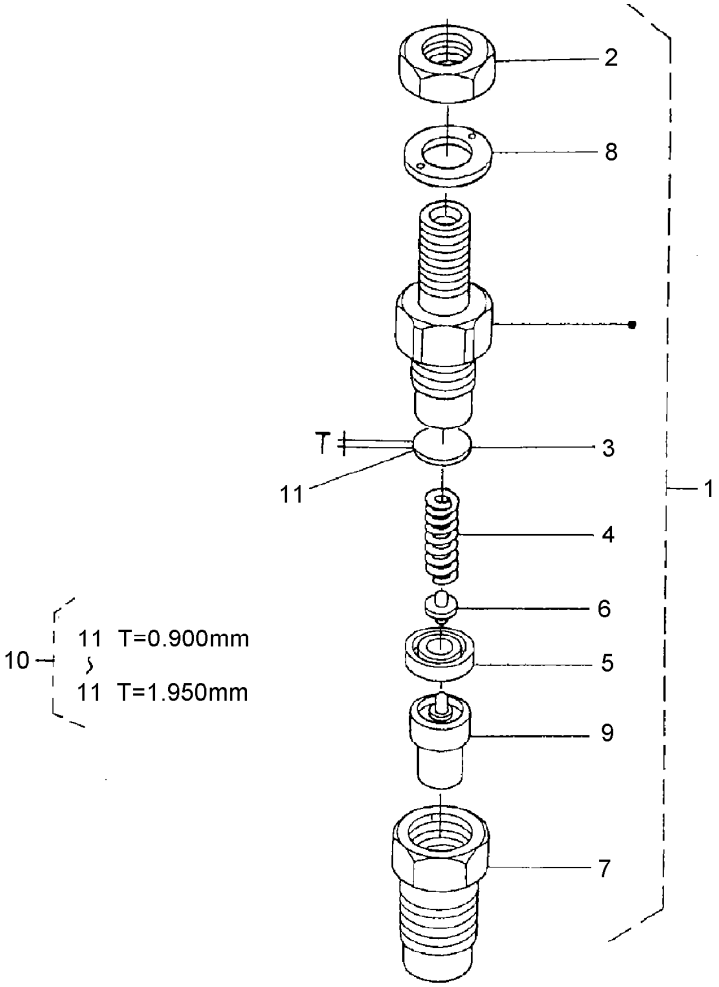

Nozzle Holder Assembly (continued)

Ref.	Part Number	Qty.	Description
11	98-7862	3	Washer-Adjusting (1.450MM)
11	98-7863	3	Washer-Adjusting (1.475MM)
11	98-7864	3	Washer-Adjusting (1.500MM)
11	98-7865	3	Washer-Adjusting (1.525MM)
11	98-7866	3	Washer-Adjusting (1.550MM)
11	98-7867	3	Washer-Adjusting (1.575MM)
11	98-7868	3	Washer-Adjusting (1.600MM)
11	98-7869	3	Washer-Adjusting (1.625MM)
11	98-7870	3	Washer-Adjusting (1.650MM)
11	98-7871	3	Washer-Adjusting (1.675MM)
11	98-7872	3	Washer-Adjusting (1.700MM)

Ref.	Part Number	Qty.	Description
11	98-7873	3	Washer-Adjusting (1.725MM)
11	98-7874	3	Washer-Adjusting (1.750MM)
11	98-7875	3	Washer-Adjusting (1.775MM)
11	98-7876	3	Washer-Adjusting (1.800MM)
11	98-7877	3	Washer-Adjusting (1.825MM)
11	98-7878	3	Washer-Adjusting (1.850MM)
11	98-7879	3	Washer-Adjusting (1.875MM)
11	98-7880	3	Washer-Adjusting (1.900MM)
11	98-7881	3	Washer-Adjusting (1.925MM)
11	98-7882	3	Washer-Adjusting (1.950MM)

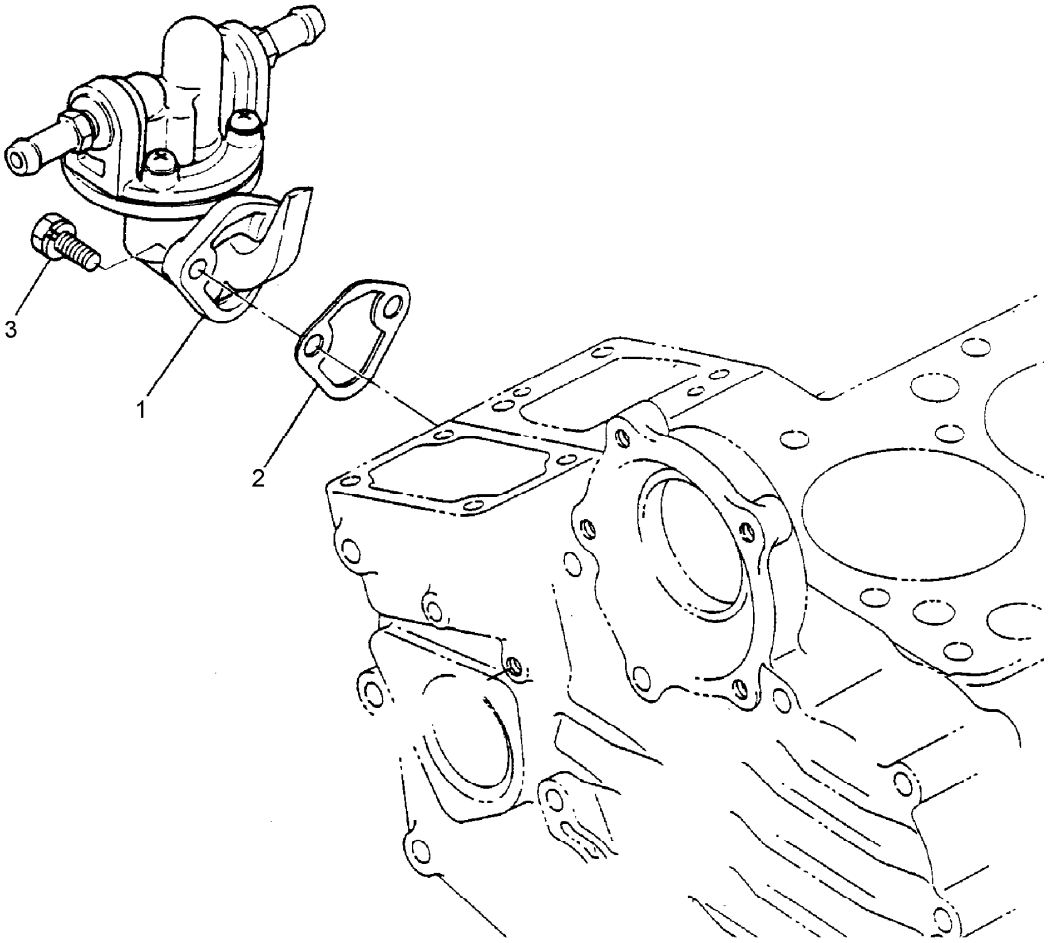

Fuel Pump Installation Assembly

Ref.	*Part Number*	*Qty.*	*Description*
1	100-2232	1	Fuel Pump ASM
2	98-9636	1	Gasket-Pump, Fuel
3	98-7692	2	Bolt

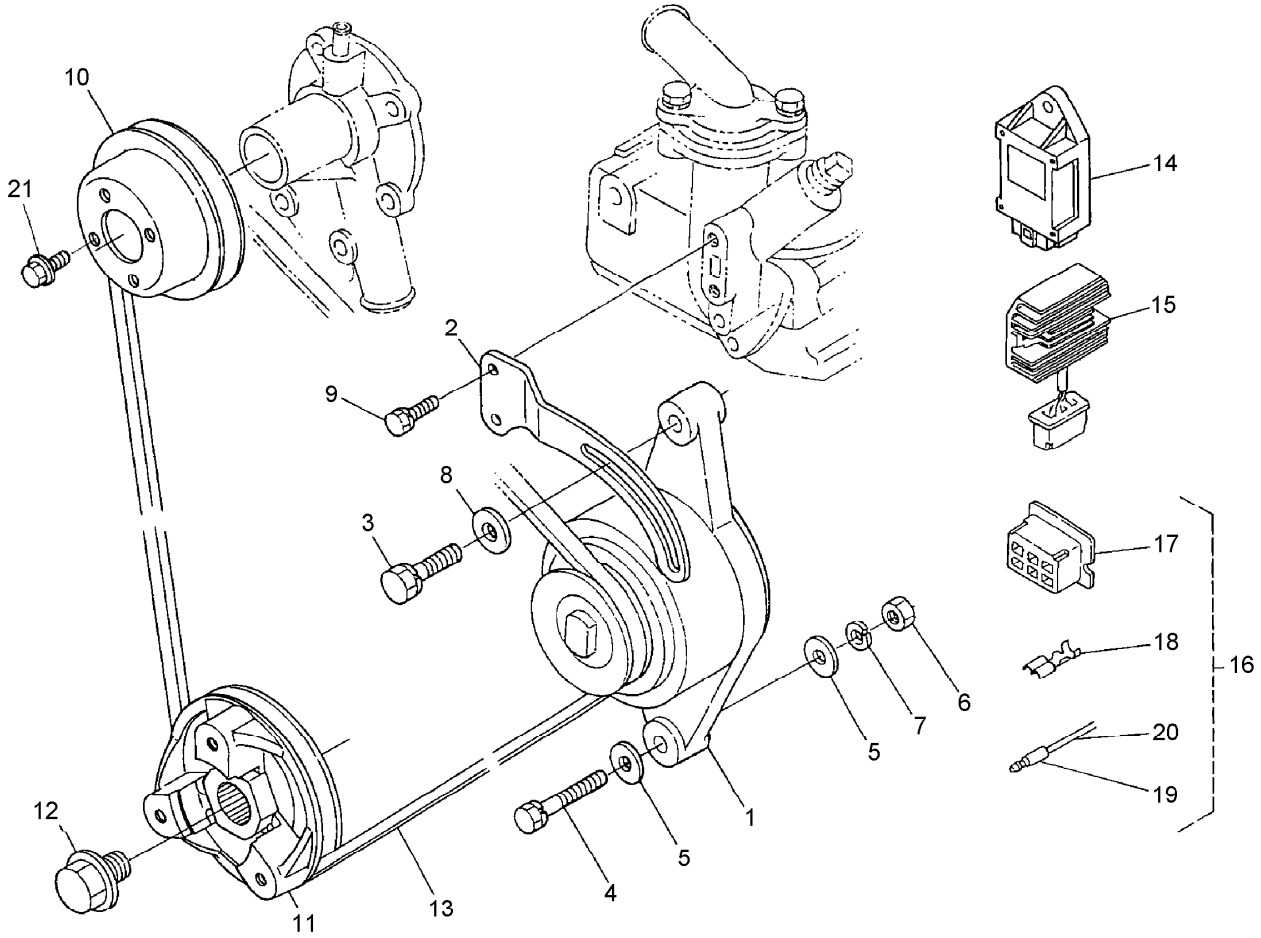

Dynamo Pulley Assembly

Ref.	*Part Number*	*Qty.*	*Description*
1	100-2168	1	Dynamo ASM
2	100-2214	1	Stay-Dynamo
3	98-7697	1	Bolt
4	100-1771	1	Bolt
5	98-7660	2	Washer-Plain
6	98-7739	1	Nut
7	98-7535	1	Washer-Spring
8	100-9233	1	Washer-Plain
9	98-7692	2	Bolt
10	100-1921	1	Pulley-Fan
11	100-2039	1	Pulley-Drive, Fan
12	100-1978	1	Bolt
13	100-1979	1	V-Belt
14	98-7611	1	Controller-Glow
15	100-2057	1	Regulator ASM
16	100-2058	1	Coupler ASM
17	100-2056	1	Connector
18	98-9699	6	Terminal
19	98-9701	2	Terminal
20	98-9702	2	Sleeve
21	99-8363	4	Bolt-Flange

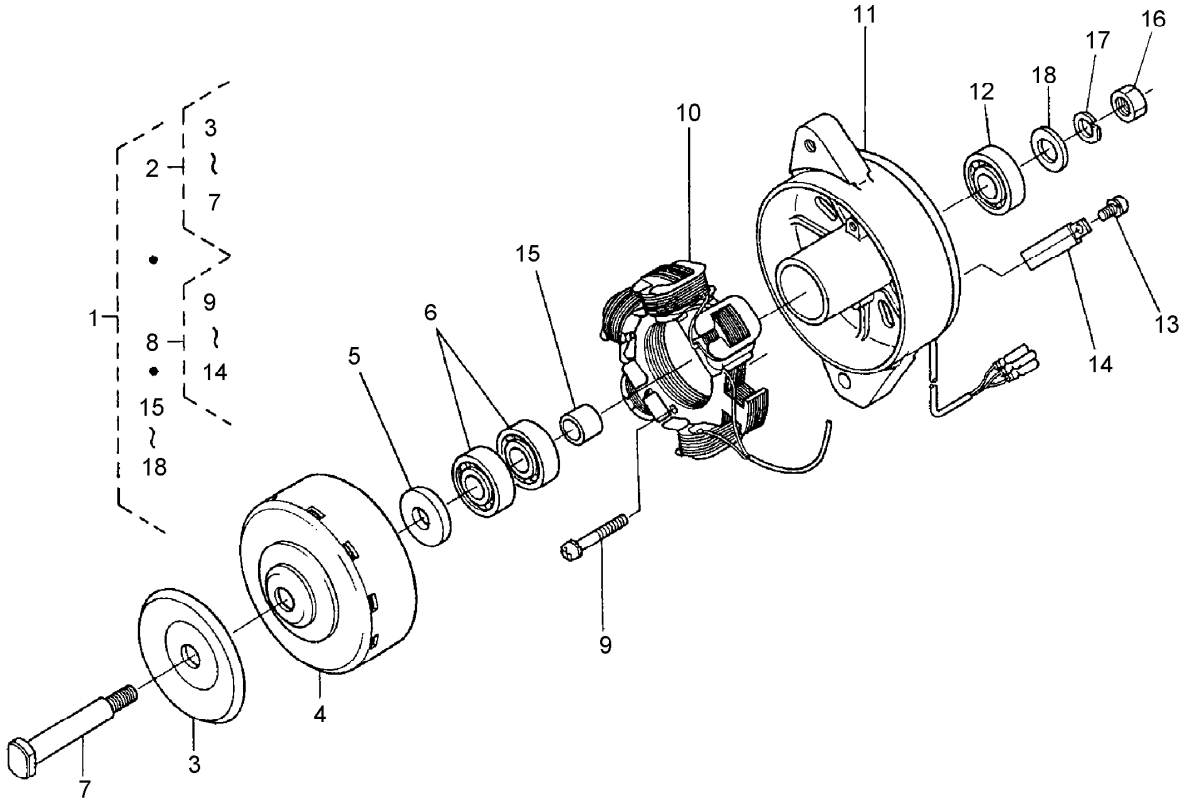

Dynamo Assembly

Ref.	Part Number	Qty.	Description
1	100-2168	1	Dynamo ASM
2	100-1862	1	Rotor ASM
3	100-2228	1	Pulley
4	100-1860	1	Rotor
5	100-2184	1	Collar
6	100-1756	2	Bearing-Ball
7	100-1867	1	Shaft-Fan
8	100-1866	1	Stator ASM
9	100-1848	2	Screw-Head, Round
10	100-1865	1	Stator
11	100-1861	1	Plate
12	100-1756	1	Bearing-Ball
13	100-1868	1	Screw-Head, Round
14	100-1864	1	Clamp-Cord
15	100-1844	1	Collar
16	100-1847	1	Nut
17	100-1850	1	Washer-Spring
18	100-1849	1	Washer-Plain

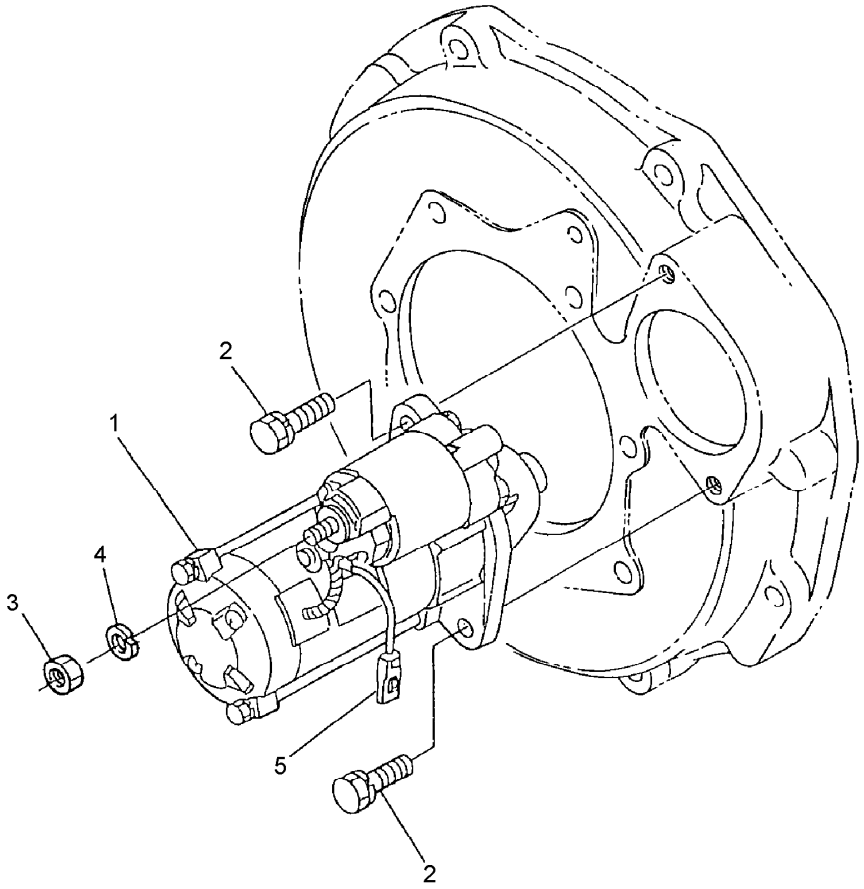

Starter Installation Assembly

Ref.	*Part Number*	*Qty.*	*Description*
1	112-2832	1	Starter ASM
2	98-7438	2	Bolt
3	98-7739	1	Nut
4	98-7535	1	Washer-Spring
5	99-1434	1	Wire-Lead

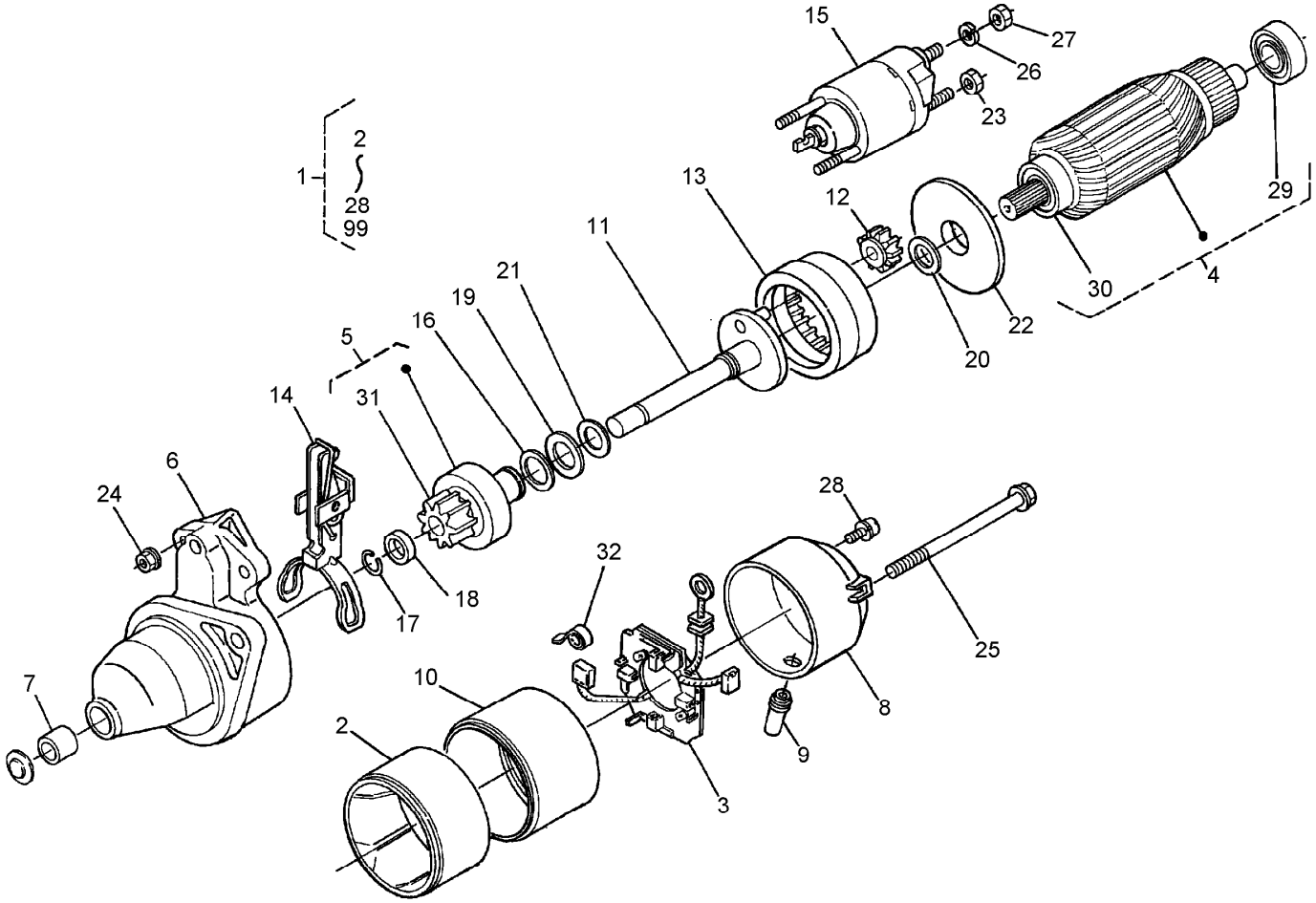

Starter Assembly

Ref.	Part Number	Qty.	Description
1	112-2832	1	Starter ASM
2	100-2181	1	Starter Yoke ASM
3	100-2222	1	Holder ASM
4	100-2182	1	Armature ASM
5	100-2185	1	Starter Clutch ASM
6	100-2180	1	Starter Housing ASM
7	100-2183	1	Bearing
8	100-2186	1	Frame ASM
9	100-2213	1	Cover
10	100-2223	1	Bearing ASM
11	100-2187	1	Starter Shaft ASM
12	100-2220	3	Gear
13	100-2221	1	Gear
14	100-2218	1	Lever
15	100-2211	1	Magnetic Switch ASM
16	100-2219	1	Ring-Snap
17	100-2212	1	Ring-Snap
18	100-2216	1	Collar
19	100-2224	1	Washer-Plain
20	100-2225	1	Washer-Plain
21	100-2226	1	Washer-Plain
22	100-2227	1	Plate
23	100-2243	1	Nut-Hex
24	100-1813	2	Nut
25	100-2210	2	Bolt-Through
26	100-2215	1	Washer-Spring
27	100-2171	1	Nut-Hex
28	100-2188	2	Screw
29	98-9412	1	Bearing-Ball
30	98-9411	1	Bearing-Ball
31	112-2833	1	Gear-Pinion
32	98-7750	12	Spring-Brush
99	99-1434	1	Wire-Lead

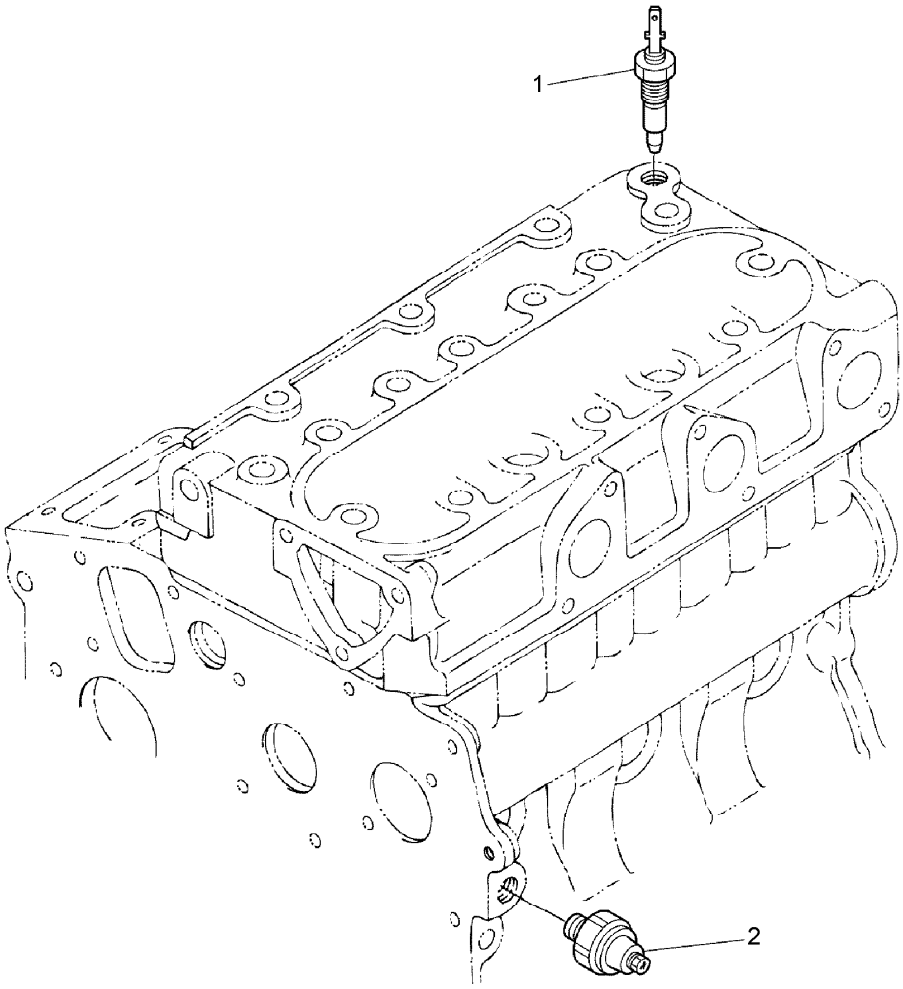

Oil Switch and Thermometer Assembly

Ref.	*Part Number*	*Qty.*	*Description*
1	99-3582	1	Thermoswitch
2	98-7764	1	Switch-Oil

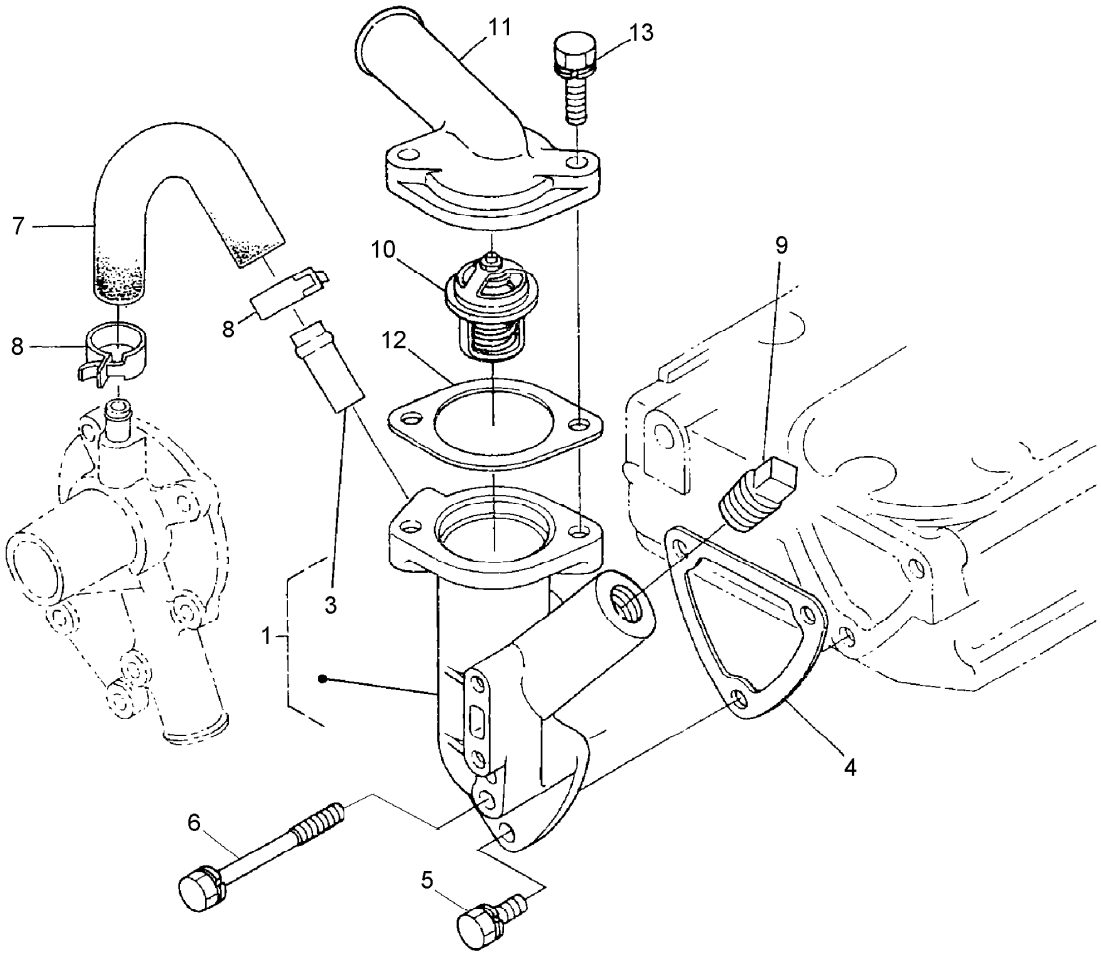

Water Flange and Thermostat Assembly

Ref.	*Part Number*	*Qty.*	*Description*
1	100-2165	1	Water Flange ASM
3	98-9580	1	Pipe-Return, Water
4	112-2834	1	Gasket-Flange, Water
5	98-7692	2	Bolt
6	105-3797	1	Bolt
7	100-2017	1	Pipe-Return, Water
8	98-9579	2	Band-Pipe
9	100-2169	1	Plug
10	100-2053	1	Thermostat ASM
11	100-2231	1	Cover-Thermostat
12	100-2157	1	Gasket-Thermostat
13	98-9353	2	Bolt

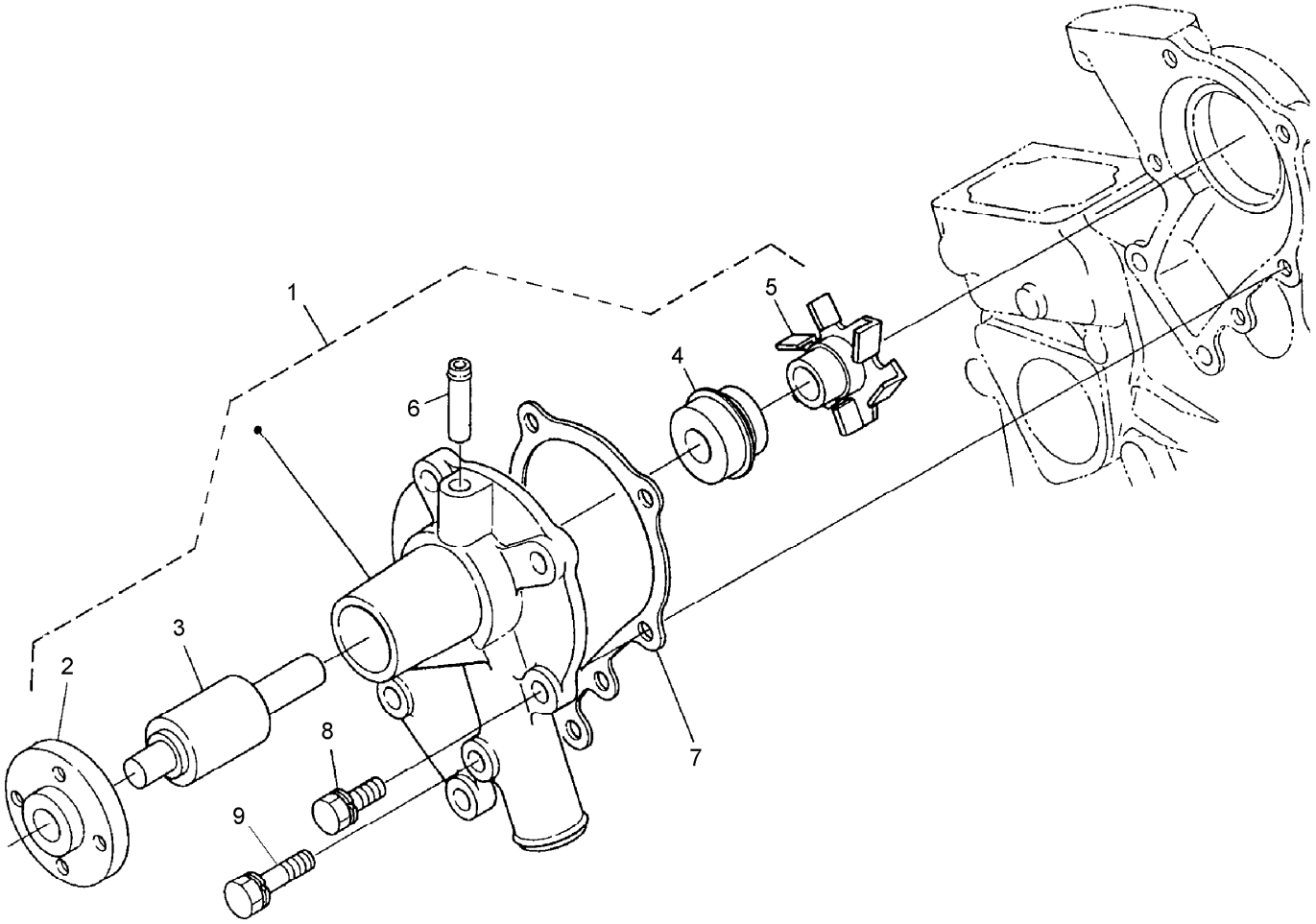

Water Pump Assembly

Ref.	Part Number	Qty.	Description
1	100-2065	1	Water Pump ASM
2	100-1933	1	Flange-Pump, Water
3	100-1934	1	Bearing-Ball
4	99-3518	1	Water Pump Seal ASM
5	100-2067	1	Impeller-Pump, Water
6	100-1932	1	Pipe-Return, Water
7	100-1976	1	Gasket-Pump, Water
8	100-1750	4	Bolt
9	100-1764	1	Bolt

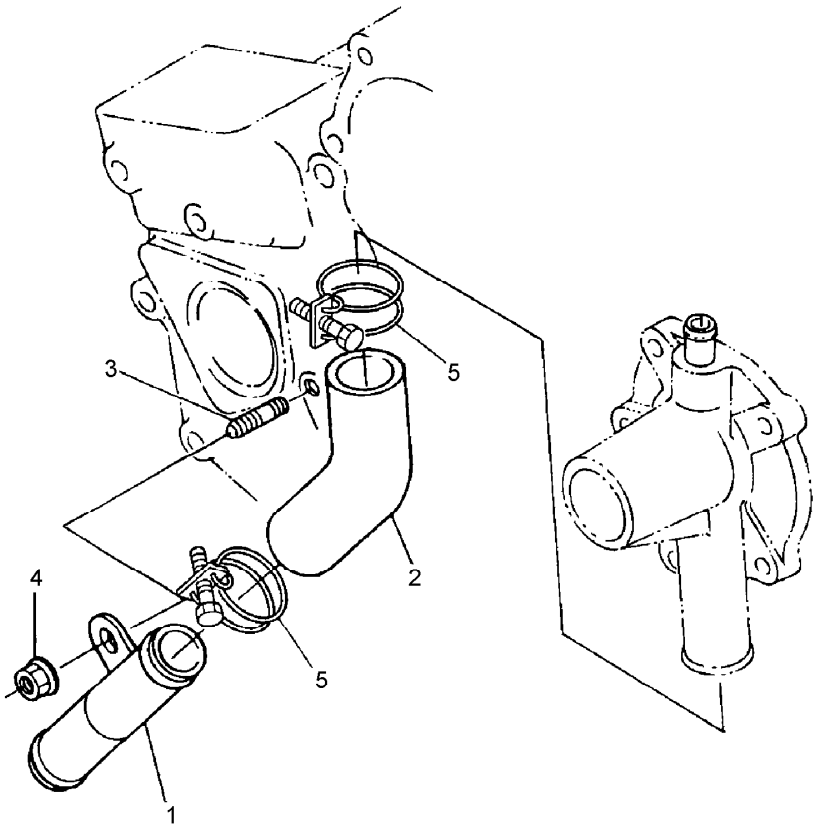

Water Pipe Assembly

Ref.	*Part Number*	*Qty.*	*Description*
1	112-2835	1	Pipe-Water
2	112-2836	1	Hose-Water
3	100-1924	1	Stud
4	100-2203	1	Nut-Flange
5	112-2837	2	Clamp-Pipe

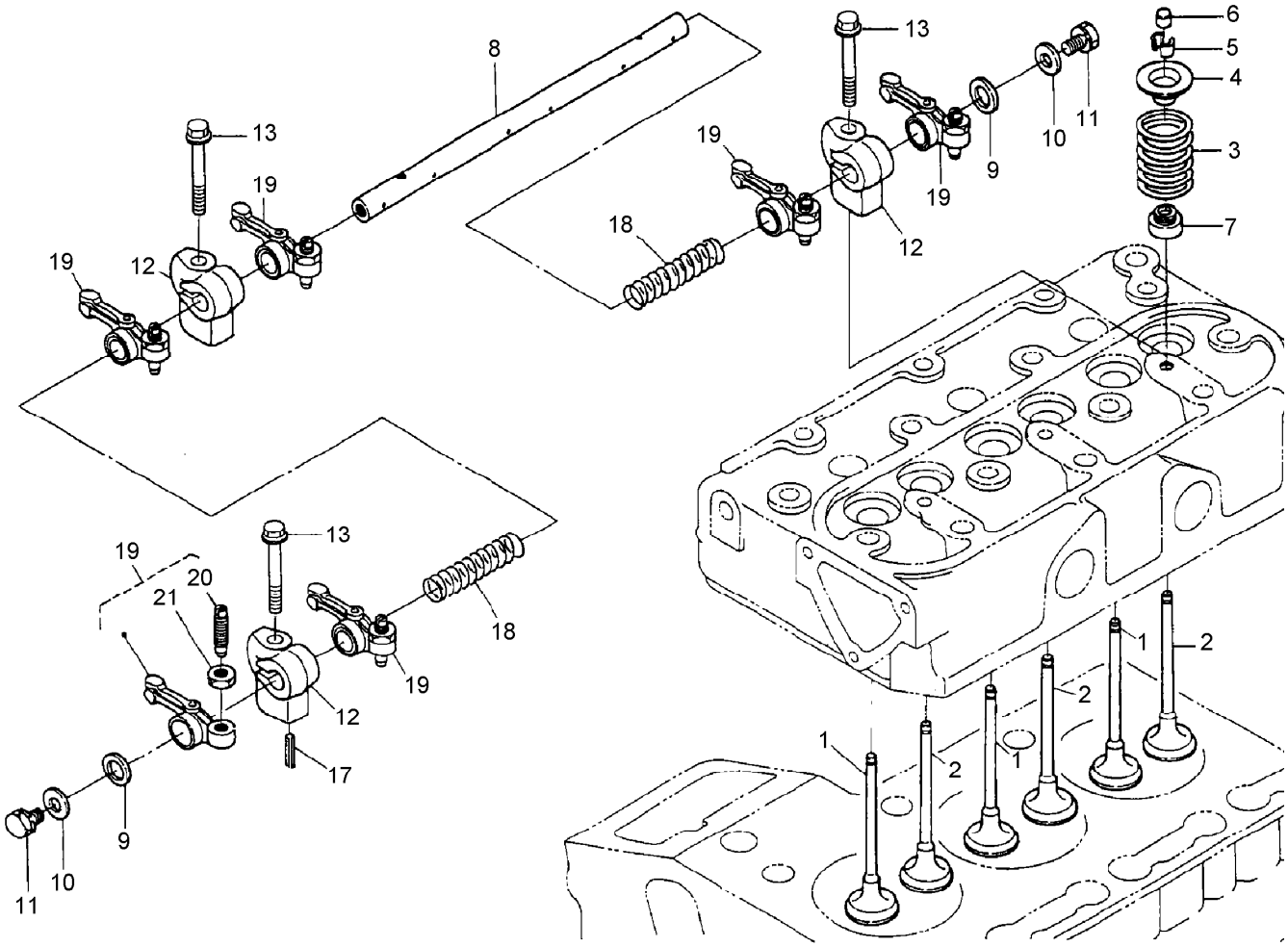

Valve and Rocker Arm Assembly

Ref.	Part Number	Qty.	Description
1	100-1821	3	Valve-Inlet
2	100-1822	3	Valve-Exhaust
3	100-1823	6	Spring-Valve
4	100-1825	6	Retainer-Spring, Valve
5	100-1826	6	Collet-Spring, Valve
6	100-2155	6	Cap-Valve
7	100-1797	6	Seal-Stem, Valve
8	100-2237	1	Shaft-Arm, Rocker
9	100-2044	2	Washer
10	100-1927	2	Washer-Plain
11	100-1762	2	Bolt
12	112-2838	3	Bracket-Arm, Rocker
13	110-3834	3	Bolt-Flange
17	98-7602	1	Pin-Spring
18	100-1828	2	Spring-Arm, Rocker
19	100-1884	6	Rocker Arm ASM
20	100-1885	6	Screw-Adjusting
21	100-1827	6	Nut

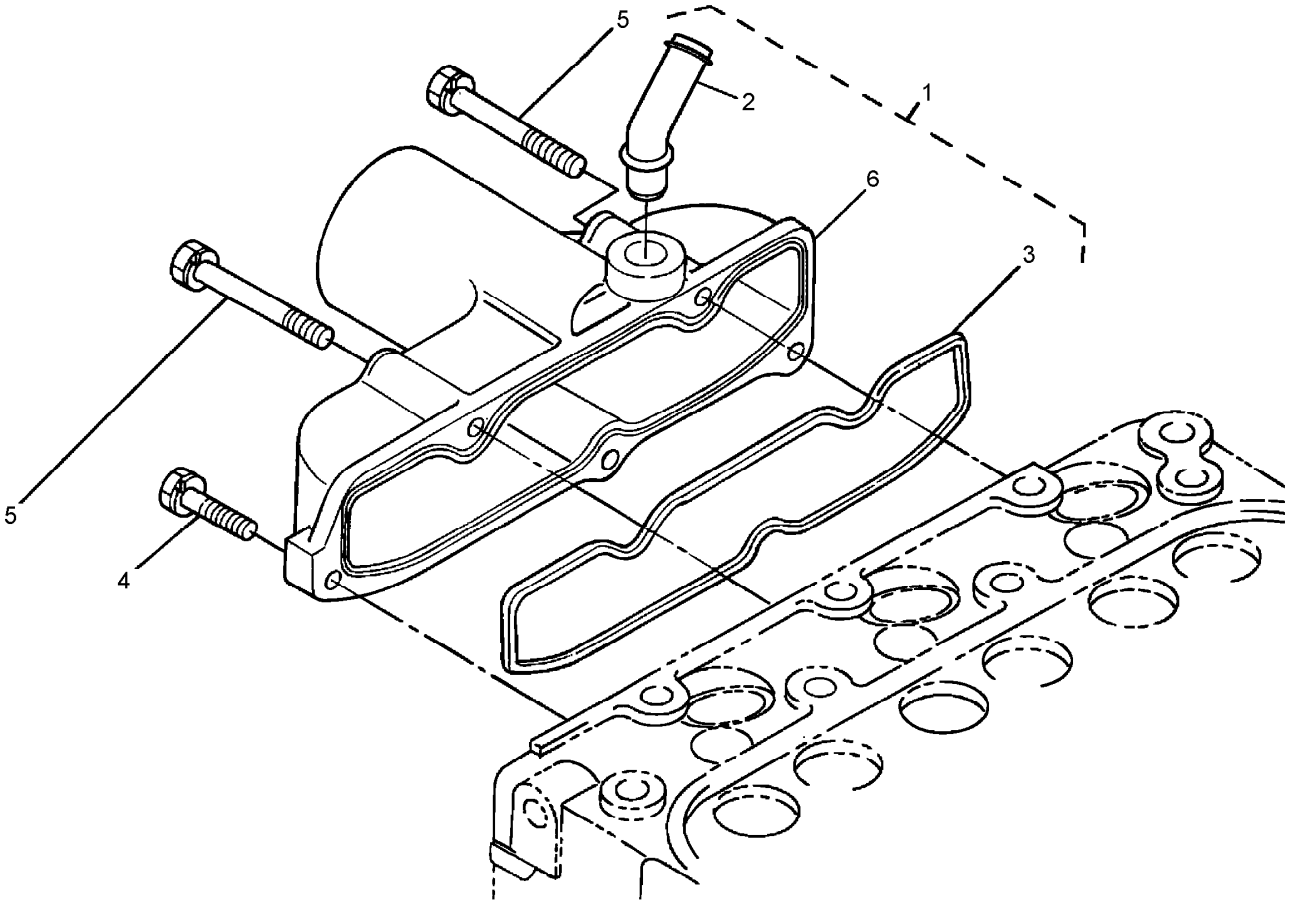

Intake Manifold Assembly

Ref.	*Part Number*	*Qty.*	*Description*
1	112-2839	1	Intake Manifold ASM
2	112-2840	1	Pipe-Breather
3	100-1937	1	Gasket-Manifold, Intake
4	98-7605	2	Bolt
5	100-1765	3	Bolt
6	112-2841	1	Manifold-Intake

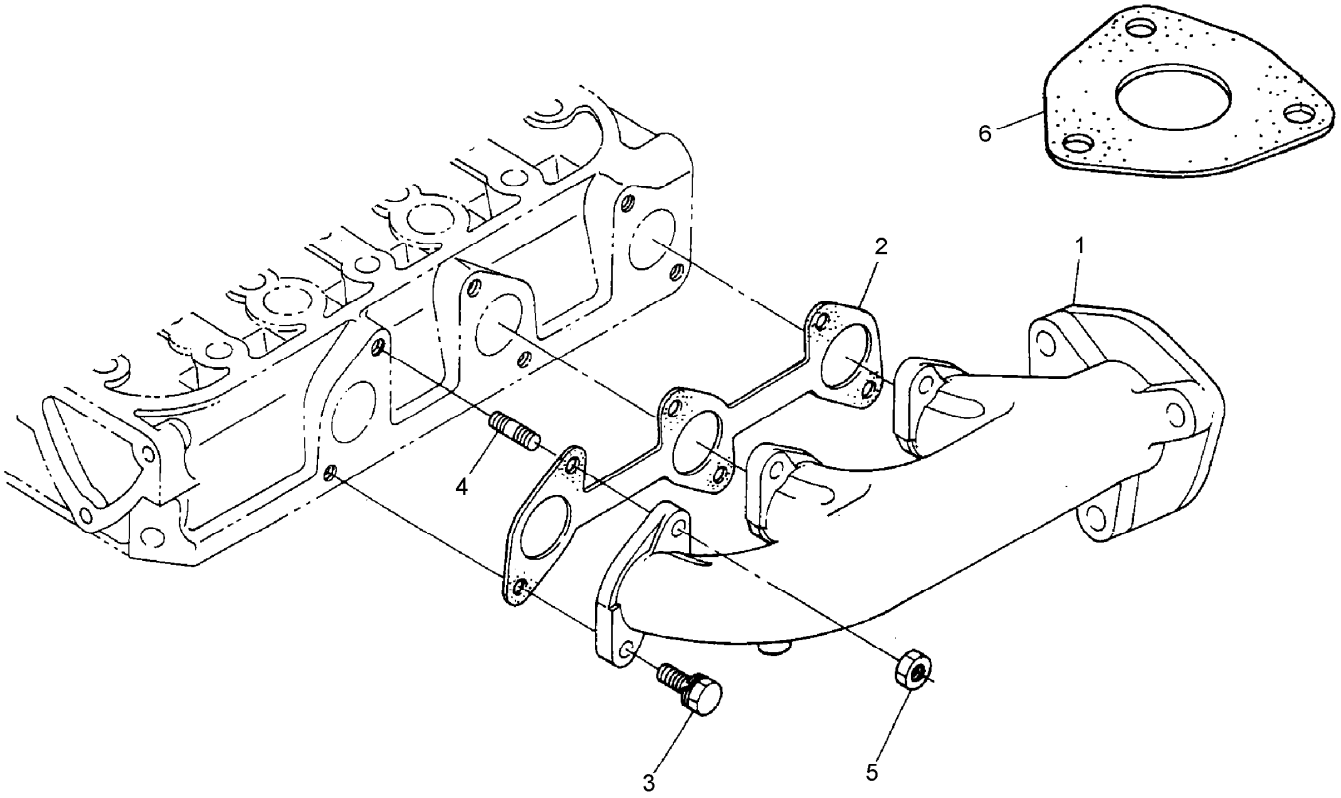

Exhaust Manifold Assembly

Ref.	*Part Number*	*Qty.*	*Description*
1	100-2244	1	Manifold-Exhaust
2	100-1957	1	Gasket
3	100-1775	3	Bolt
4	100-2202	3	Stud
5	100-1778	3	Nut
6	100-2238	1	Gasket-Muffler

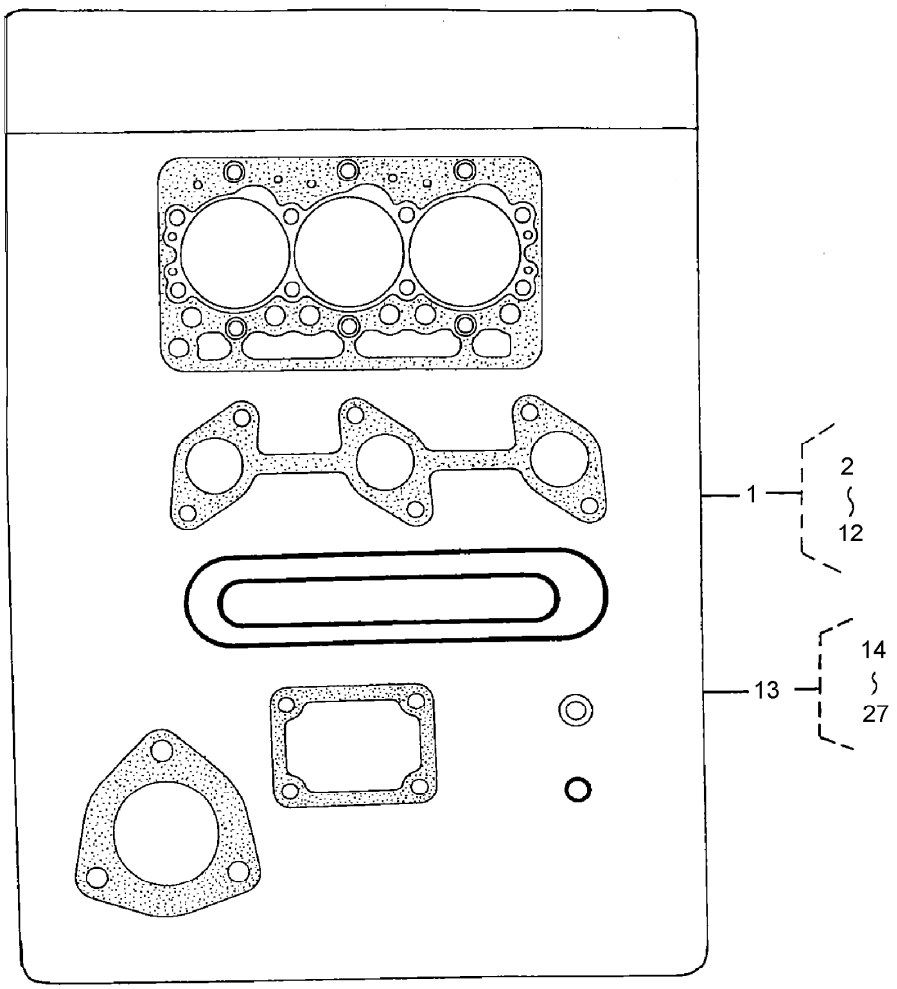

Gasket Kit Assembly

Ref.	Part Number	Qty.	Description
1	100-2176	1	Upper Gasket Kit
2	98-7509	1	O-Ring
3	100-2043	1	Gasket-Head, Cylinder
4	100-1937	1	Gasket-Manifold, Intake
5	100-1957	1	Gasket
6	100-1797	6	Seal-Stem, Valve
7	112-2842	1	Gasket-Cover, Head
8	98-7654	3	Gasket
9	99-3446	1	O-Ring
10	112-2834	1	Gasket-Flange, Water
11	100-2157	1	Gasket-Thermostat
12	100-2238	1	Gasket-Muffler
13	100-2174	1	Lower Gasket Kit
14	100-1976	1	Gasket-Pump, Water

Ref.	Part Number	Qty.	Description
15	112-2805	1	Gasket-Case, Gear
16	100-2206	3	O-Ring
17	112-2812	1	Gasket-Case, Bearing
18	100-1876	1	Gasket-Cover, Case
19	100-2209	1	O-Ring
20	105-3776	1	O-Ring
21	100-2003	1	Gasket-Pump, Oil
22	98-9636	1	Gasket-Pump, Fuel
23	100-2061	1	Gasket-Gearcase
24	100-1914	1	Gasket
25	98-7428	2	Gasket
26	100-2208	1	O-Ring
27	100-2207	1	O-Ring

Attachments and Accessories

For 22303 Dingo 320-D Compact Utility Loader

Product Name	Model/Part
Tire Chain Kit	100-4140
Helmet-Face Shield	100-4143
Narrow Tire ASM	104-0572
Tube-Tire (18 x 8.50-10)	105-4070
CE Kit	22360
Auger Head	22400
4 Cubic Foot Standard Bucket	22409
Loose Materials Bucket	22410
Four In One Bucket	22411
48in Hydraulic Blade	22414
Rotary Broom	22415
Counterweight	22417
Adjustable Forks	22418
Leveler	22419
Bore Drive Head	22420
Multi-Purpose Tool	22423
U-Blade	22424
Stump Grinder	22429
Tree Forks	22438
Concrete Breaker	22441
The Eliminator Scarifier/Groomer	22443
40in Tiller	22445
Trencher Head	22447
Snowthrower	22456
Trencher Head	22459
Narrow Bucket	22520
Over-the-Tire Rubber Tracks	22662
Steel Track Kit	22665
Auger Head	22802
Universal Swivel Auger Head	22803
Vibratory Plow	22910
Soil Cultivator	23101
Backhoe	23160
Wheel and Tire ASM	98-4709
RH Wheel And Tire ASM (Powerlug)	99-3140
LH Wheel And Tire ASM (Powerlug)	99-3141

TORO®

Count on it.