Form No. 3367-362 Rev B

TORO®

Count on it.

Parts Catalog

323

Compact Utility Loader

Model No. 22318—Serial No. 311000001 and Up

Register at www.Toro.com.
Original Instructions (EN)

CE

3367-362 B

Ordering Replacement Parts

To order replacement parts, please supply the part number, the quantity, and the description of each part desired.

Understanding Reference Numbers

Each identified part in an illustration has a reference number. The reference number for a part also appears in the parts list, along with other information about the part.

This catalog uses two special reference number formats, one to indicate parts in a service assembly and another to indicate the quantity of a given part in an illustration.

Service Assembly Reference Numbers

Parts in service assemblies have reference numbers in the form a:b. The a represents the reference number of the entire service assembly and the b represents a sequential number unique to each part within the service assembly.

For example, a wheel assembly might be identified by reference number 6, the tire by 6:1, the valve by 6:2, and the wheel by 6:3. When you order the assembly identified by reference number 6, you receive all parts identified by reference numbers 6:1,6:2, and 6:3. However, you may also order any part individually. Reference numbers of this type appear in illustration and in parts lists.

Reference Numbers Indicating Quantity

In an illustration, if a reference number indicates more than one part, the reference number has the form nX y. The n represents the quantity of the part, the X is the multiplication symbol, and the y represents the reference number.

For example, in an illustration, the reference number 2X 37 means that two of the parts identified by reference number 37 are indicated.

Contents

Frame and Loader Arm Assembly 4
Hood and Screen Assembly 5
Wheel and Motor Assembly 6
Hydraulic Motor Assembly No. 99-3052 7
Engine and Pump Assembly 8
Hydraulic Motor Assembly No. 108-4710 10
Fuel Tank and Air Filter Assembly 11
Air Cleaner Assembly No. 117-9989 12
Hydraulic Tank and Filter Assembly 13
Auxiliary Control Lever Assembly 14
Hydraulic Valve Assembly 15
Auxiliary Hydraulic Valve Assembly No. 99-3077 16
Hydraulic Selector Valve Assembly No. 99-3072 17
Four Spool Valve Assembly 18
Four Spool Hydraulic Valve Assembly No. 105-8377 19
Hydraulic Motor Assembly 20
Counterbalance Valve Assembly No. 99-3040 21
Hydraulic Cylinder Assembly 22
Hydraulic Cylinder Assembly No. 105-7867 23
Electrical Component Assembly 24
Thigh Support Assembly 25
Attachments and Accessories 26

© 2023—The Toro® Company
8111 Lyndale Avenue South
Bloomington, MN 55420

Contact us at www.Toro.com.
Printed in the USA.
All Rights Reserved

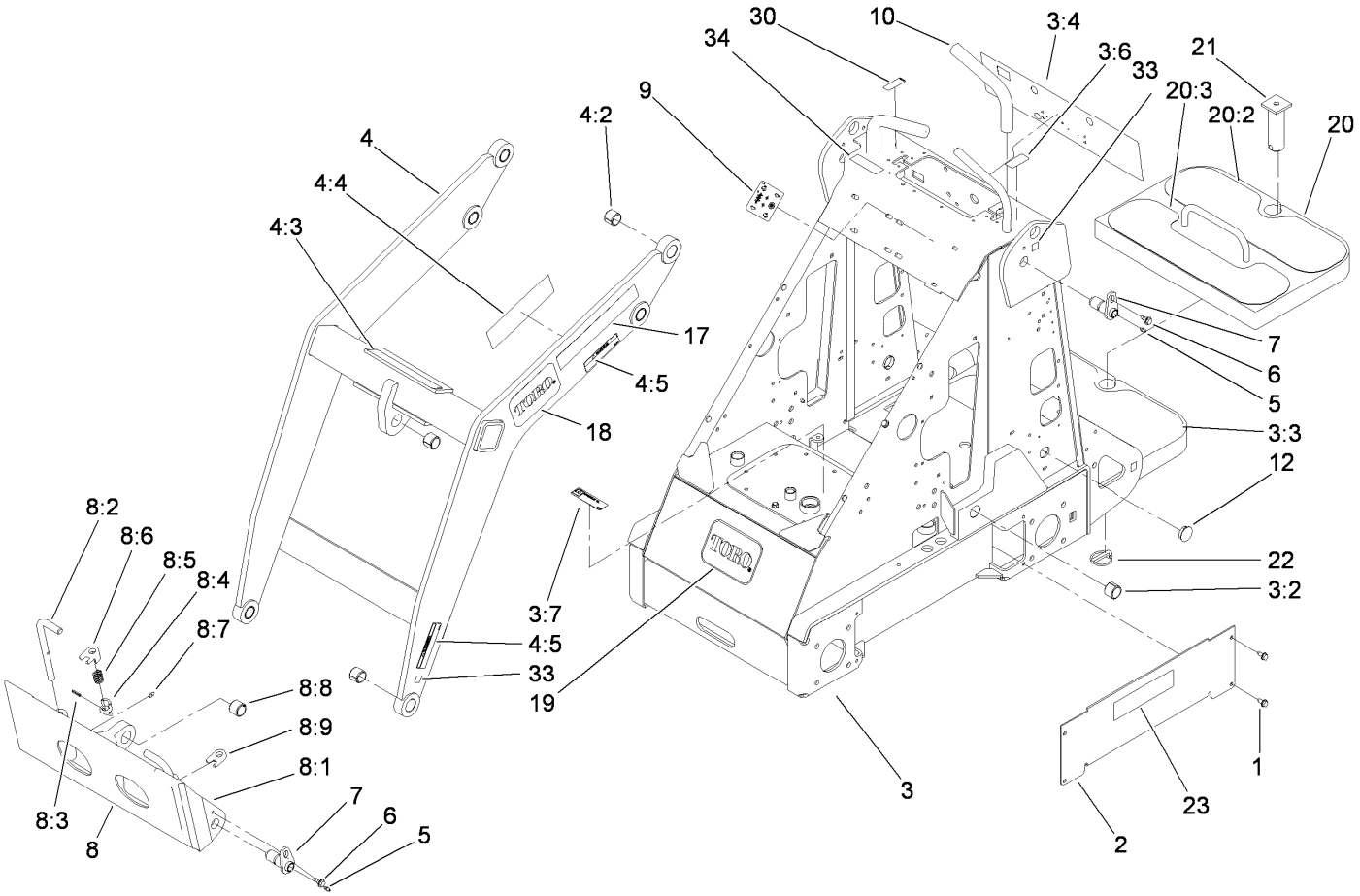

Frame and Loader Arm Assembly

Ref.	Part Number	Qty.	Description
1	32144-70	8	Screw-HWHTF
2	106-8178-01	2	Cover-Hose
3	108-9710	1	Frame ASM
3:2	98-4871	2	Bushing-Tension
3:3	98-9947	2	Tread-Foot
3:4	108-9732	1	Decal-Panel, Control
3:6	98-8219	1	Decal-Throttle
3:7	105-8432	1	Decal-Oil, HYD
4	106-8155	1	Loader ASM
4:2	98-4871	7	Bushing-Tension
4:3	98-4682	1	Decal-Caution
4:4	98-9051	1	Decal-Danger
4:5	100-6141	4	Decal-Pinch
5	302-5	4	Fitting-Grease
6	99-5105	4	Screw-Shoulder
7	112-2609	4	Pin-Pivot
8	115-0788	1	Quick Attach ASM
8:1	115-0774-03	1	Mount-Qtach
8:2	105-8367	2	Pin-Locking
8:3	3285-1	2	Pin-Grooved
8:4	105-0246	2	Cam

Ref.	Part Number	Qty.	Description
8:5	98-4694	2	Spring-Compression
8:6	104-5909	1	Stop-RH
8:7	302-5	2	Fitting-Grease
8:8	98-4871	1	Bushing-Tension
8:9	104-5903	1	Stop-LH
9	108-9716	1	Decal-Selector, Speed
10	98-4845	2	Grip-Cushion
12	94-1402	2	Plug-Hole
17	117-9980	2	Decal
18	93-7340	2	Decal
19	62-5550	1	Decal
20	112-4947	1	Counterweight ASM
20:2	98-9947	1	Tread-Foot
20:3	112-4948	1	Tread
21	99-8638	1	Pin
22	99-9978	1	Pin-Lynch
23	105-8429	2	Decal
30	94-2551	1	Decal-Choke
33	93-9084	6	Decal-Point, Lift
34	117-2718	1	Decal-Arrester, Spark

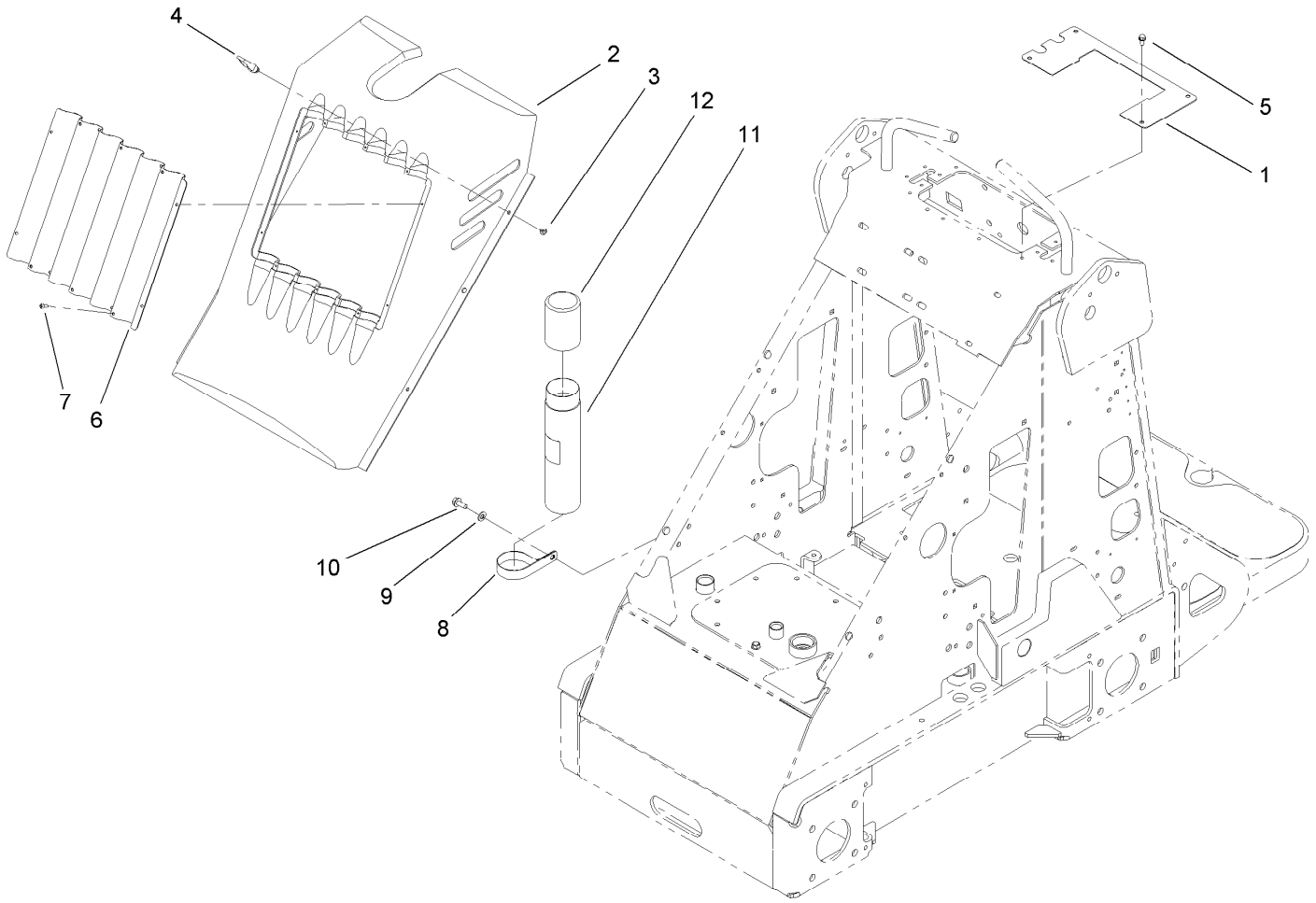

Hood and Screen Assembly

Ref.	*Part Number*	*Qty.*	*Description*
1	108-9731-03	1	Plate-Cover
2	99-3164	1	Cover-Hood
3	99-3058	4	Washer
4	74-5950	4	Latch-Swell
5	32144-4	4	Screw-HWH
6	99-3147-03	1	Grille-Screen
7	32144-111	10	Screw-PPH
8	2412-133	1	Clamp-R
9	3256-23	1	Washer-Plain
10	32144-70	1	Screw-HWHTF
11	104-7050	1	Tube-Manual
12	104-7048	1	Cap-Housing

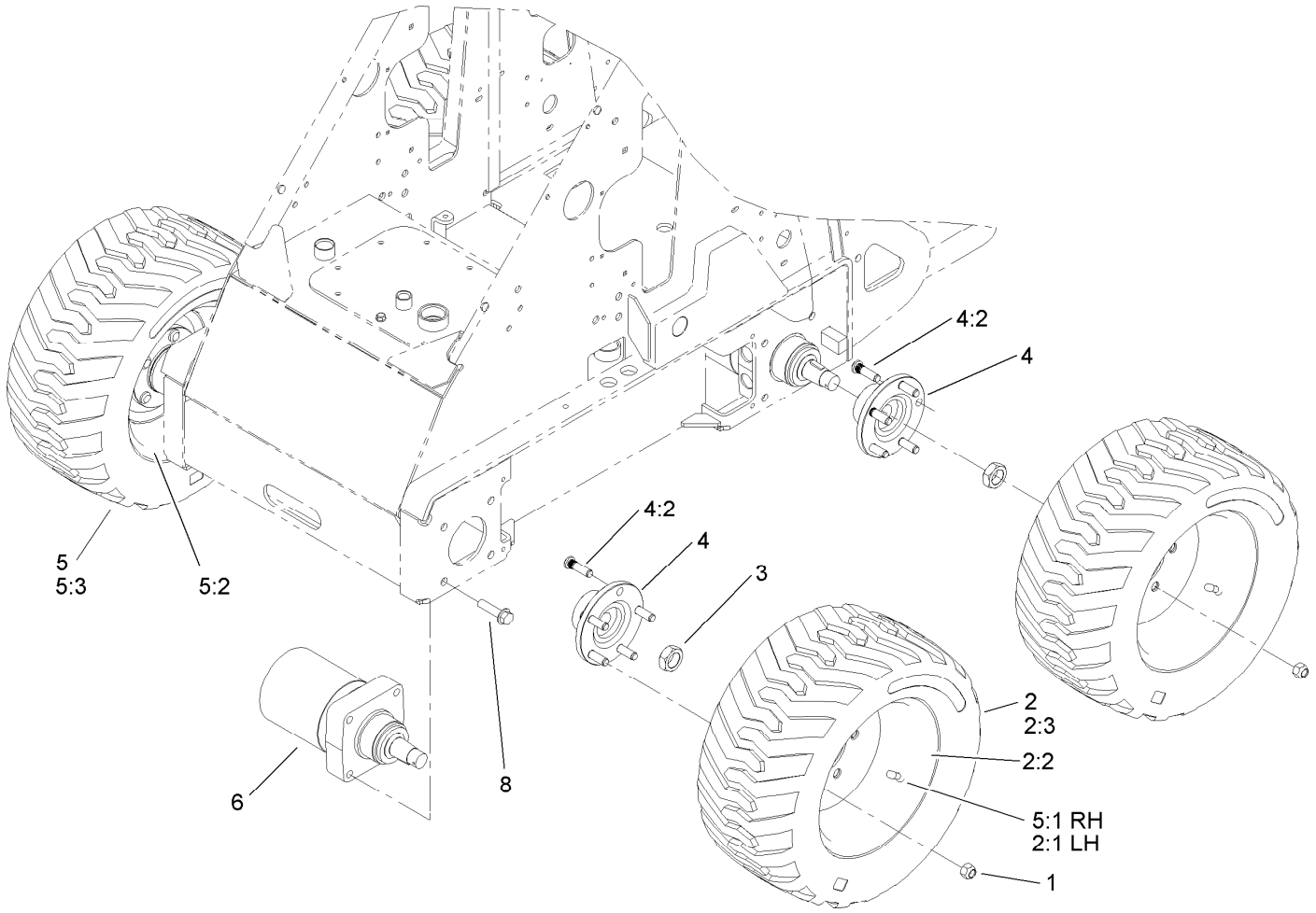

Wheel and Motor Assembly

Ref.	*Part Number*	*Qty.*	*Description*
1	242-50	20	Nut-Lug
2	98-2747	2	LH Wheel And Tire ASM
2:1	232-27	1	Stem-Valve
2:2	98-2748	1	Wheel
2:3	98-2749	1	Tire
3	106-8159	4	Nut-Lock
4	99-3064	4	Hub ASM
4:2	10-6830	5	Stud-Type, Drive
5	99-1447	2	RH Wheel And Tire ASM
5:1	232-27	1	Stem-Valve
5:2	98-2748	1	Wheel
5:3	98-2749	1	Tire
6	99-3052	4	HYD Motor ASM
8	3234-27	16	Screw-HHF

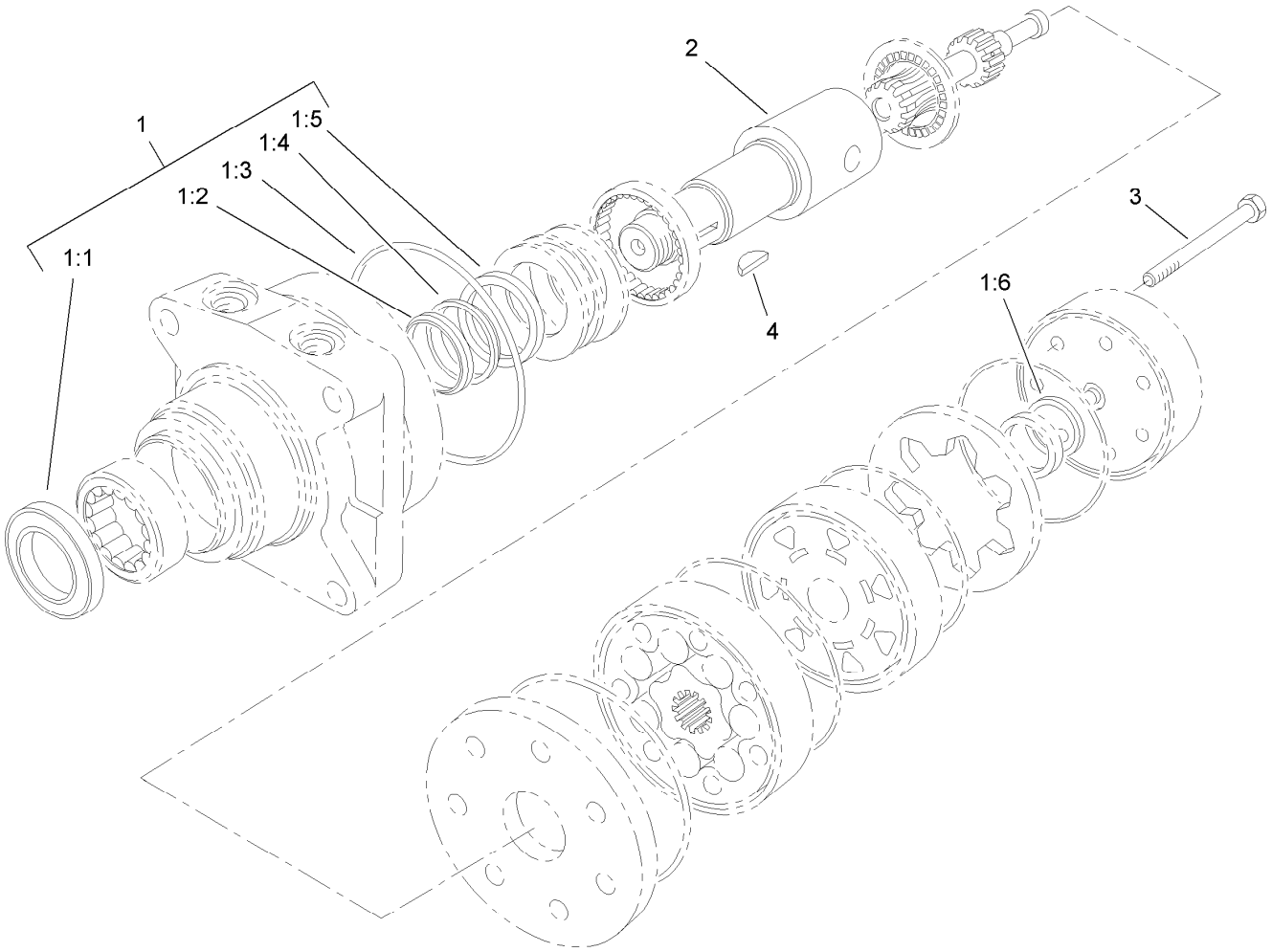

Hydraulic Motor Assembly No. 99-3052

Ref.	*Part Number*	*Qty.*	*Description*
1	94-8178	1	Seal Kit
1:1		1	Seal-Dirt And Water ●
1:2		1	Backup-Ring ●
1:3		1	Seal-Shaft ●
1:4		1	Washer-Backup ●
1:5		5	Seal-Square, Ring (Inner) ●
1:6		1	Seal-Commutator ●
2	99-3090	1	Shaft-Coupling
3	99-3091	7	Screw-Cap, HH
4	3257-42	1	Key-Woodruff

● Not serviced separately

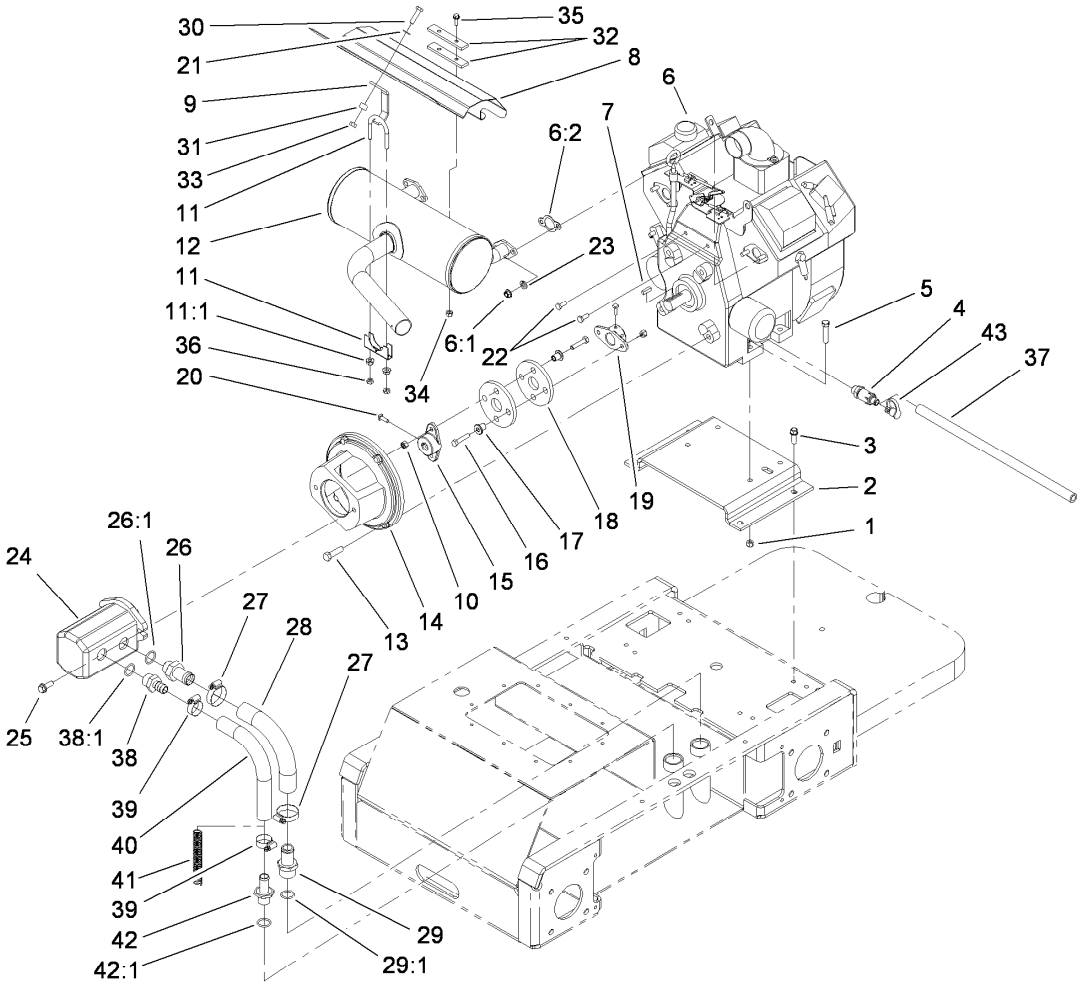

Engine and Pump Assembly

Ref.	Part Number	Qty.	Description
1	3296-39	4	Nut-Lock, NI
2	98-4666-03	1	Mount-Engine
3	95-1726	4	Screw-Taptite
4	92-6877	1	Valve-Drain, Oil
5	323-9	4	Screw-HH
6		1	Engine-Kohler, Ch23S-76549 ●
6:1	92-6780	4	Nut-HF
6:2	93-0350	2	Gasket-Exhaust
7	10-7070	1	Key-Square
8	99-3115-03	1	Shield-Muffler
9	99-3138-03	1	Support-Shield
10	3296-29	4	Nut-Lock, NI
11	2112-9	1	Clamp
11:1	32128-20	2	Nut-HF
12	105-8381	1	Muffler
13	324-6	4	Screw-HH
14	98-2751-03	1	Mount-Pump
15	98-4701	1	Hub-Pump
16	322-7	4	Screw-HH
17	71-4411	4	Spacer
18	115-4523	2	Coupling-Rubber
19	110-5236	1	Hub-Engine
20	3241-6	4	Screw-SQH
21	3256-23	1	Washer-Plain

Ref.	Part Number	Qty.	Description
22	33114-020	2	Screw-HH
23	3253-4	4	Washer-Lock
24	108-4710	1	HYD Pump ASM
25	66-9300	2	Screw-HHF
26	99-3017	1	Fitting
26:1	237-81	1	O-Ring
27	2412-111	2	Clamp-Hose, W/Liner
28	99-3046	1	Hose-Suction, Formed
29	354-78	1	Fitting-STR
29:1	237-146	1	O-Ring
30	322-6	1	Screw-HH
31	98-4695	1	Spacer
32	99-3116-03	2	Spacer-Bar
33	32152-1	1	Nut-Lock, Cone
34	32152-4	2	Nut-Lock, Cone
35	3234-21	2	Screw-HHF
36	3218-2	2	Nut-Hex Jam
37	98-4667	1	Hose
38	354-73	1	Fitting
38:1	237-81	1	O-Ring
39	2412-129	2	Clamp-Hose
40	98-2713	1	Hose-Suction, HYD
41	99-5349	1	Spring-Compression
42	99-6932	1	Fitting-STR

● Not serviced separately

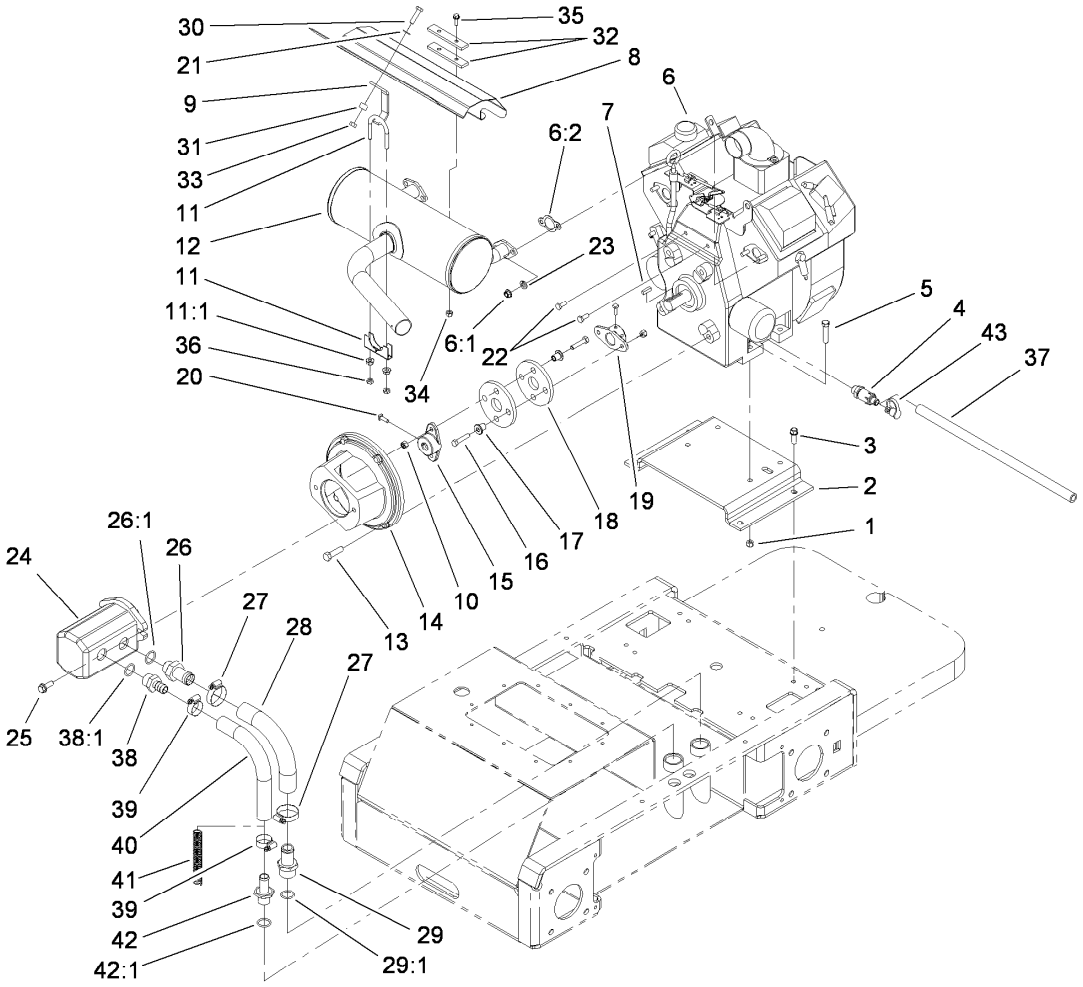

Engine and Pump Assembly (continued)

Ref.	*Part Number*	*Qty.*	*Description*
42:1	237-117	1	O-Ring
43	354-79	1	Cap-Dust

● Not serviced separately

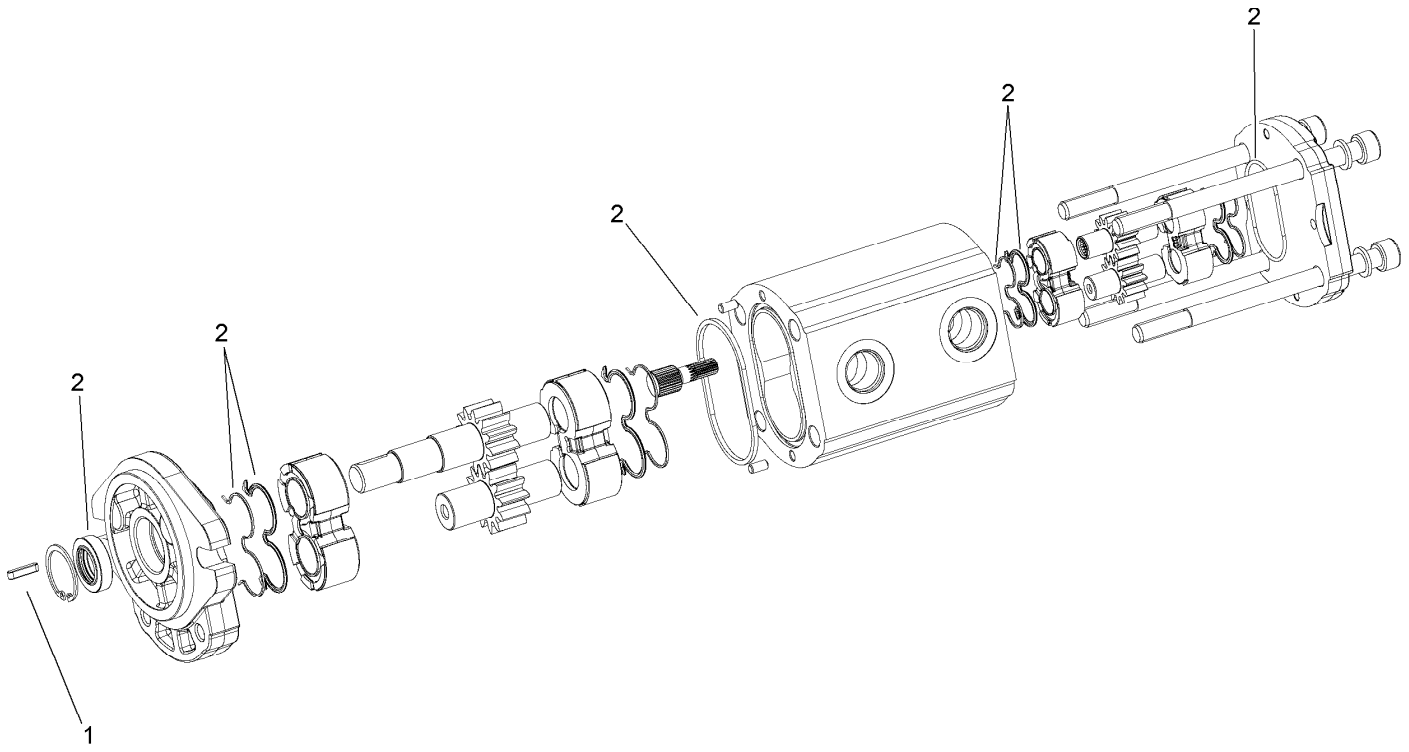

Hydraulic Motor Assembly No. 108-4710

Ref.	*Part Number*	*Qty.*	*Description*
1	98-4700	1	Key-Square
2	99-1353	1	Seal Kit

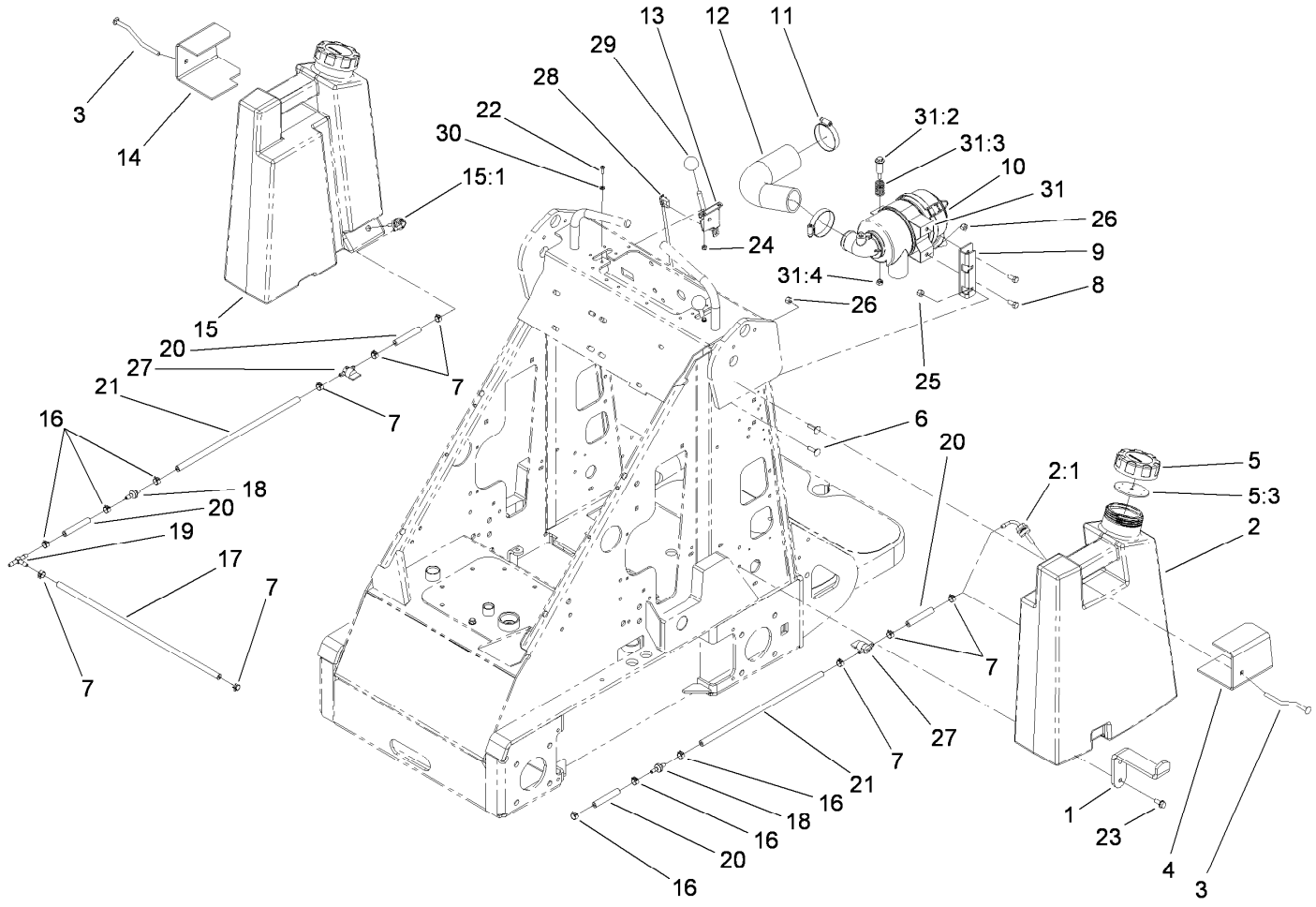

Fuel Tank and Air Filter Assembly

Ref.	Part Number	Qty.	Description
1	98-4656-03	2	Mount-Bottom, Tank
2	105-8439	1	LH Fuel Tank ASM
2:1	103-2605	1	Fitting-Fuel, Bulkhead
3	98-4657	2	Bolt-Mount
4	99-1444-03	1	Plate-Mount, Left
5	104-7418	2	Cap-Fuel, Gas
5:3	104-7420	1	Gasket-Vented
6	3230-2	2	Bolt-CARR
7	2412-98	7	Clamp-Hose
8	322-3	2	Screw-HH
9	99-3080-03	1	Mount-Cleaner, Air
10	117-9989	1	Air Cleaner ASM
11	2412-42	2	Clamp-Hose
12	99-3148	1	Hose-Air
13	108-9730	2	Lever-Control
14	98-4655-03	1	Plate-Mount
15	105-8440	1	RH Fuel Tank ASM
15:1	103-2605	1	Fitting-Fuel, Bulkhead
16	92-2379	7	Clamp-Hose

Ref.	Part Number	Qty.	Description
17	110-5701	1	Hose-Fuel
18	99-5000	2	Valve-Check, Fuel
19	99-5005	1	Fitting-Tee, Barbed
20	109-0304	4	Hose-Fuel
21	109-0296	2	Hose-Fuel
22	3290-134	4	Screw
23	32144-70	4	Screw-HWHTF
24	32149-7	4	Nut-Keps
25	32128-20	2	Nut-HF
26	3296-29	4	Nut-Lock, NI
27	1-603770	2	Valve-Fuel
28	108-4718	2	Cable-Control
29	233-42	2	Knob
30	3256-51	4	Washer-Flat
31	93-2191	1	Air Cleaner Mounting Band ASM
31:2	94-3653	1	Bolt
31:3	94-3654	1	Spring
31:4	48-9510	1	*obs* Nut

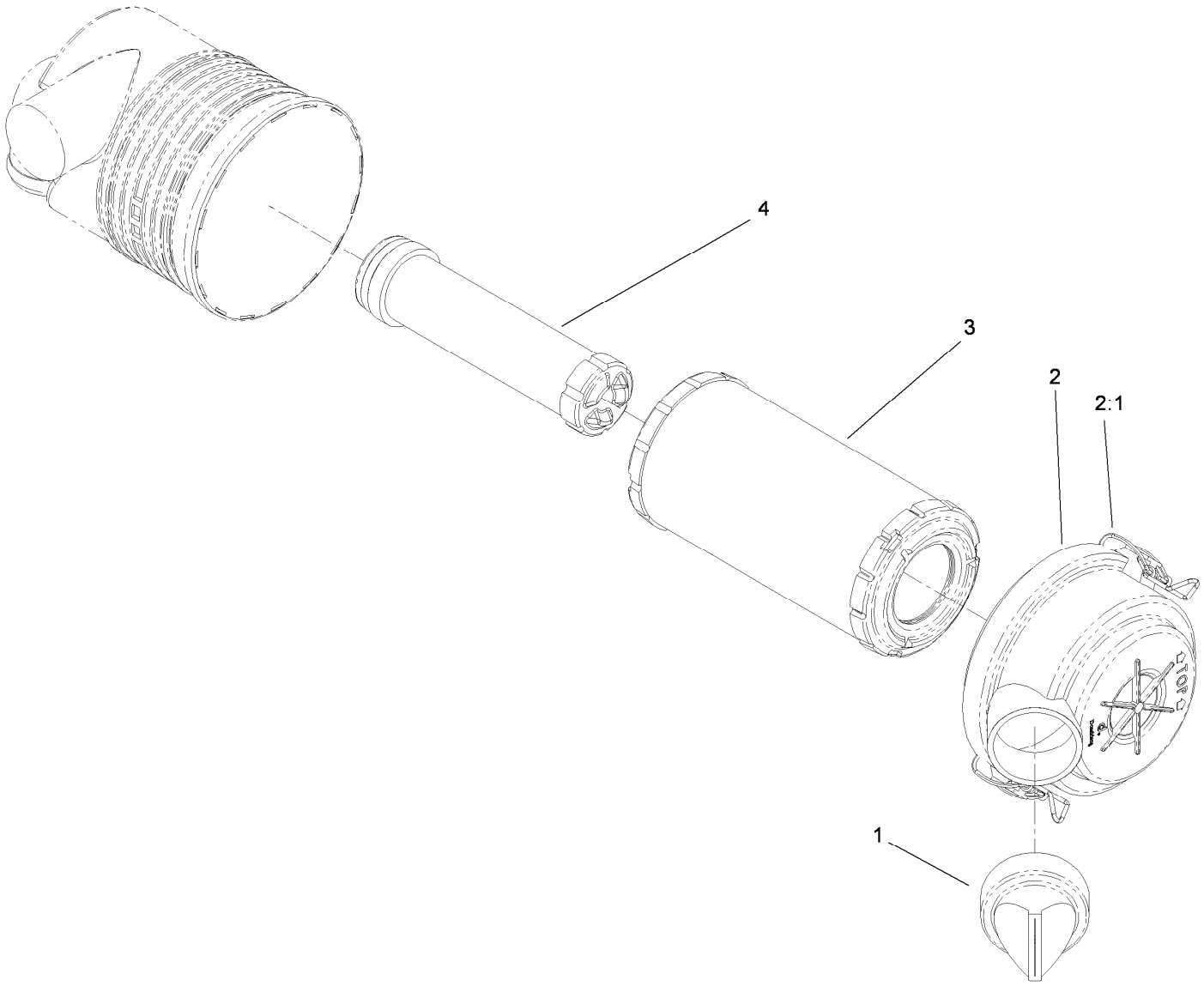

Air Cleaner Assembly No. 117-9989

Ref.	*Part Number*	*Qty.*	*Description*
1	87-9400	1	Valve-Vacuator
2	94-3652	1	Cover ASM
2:1	1-643283	2	Latch-Cleaner, Air
3	108-3811	1	Filter-Air
4	98-2982	1	Filter-Element, Safety

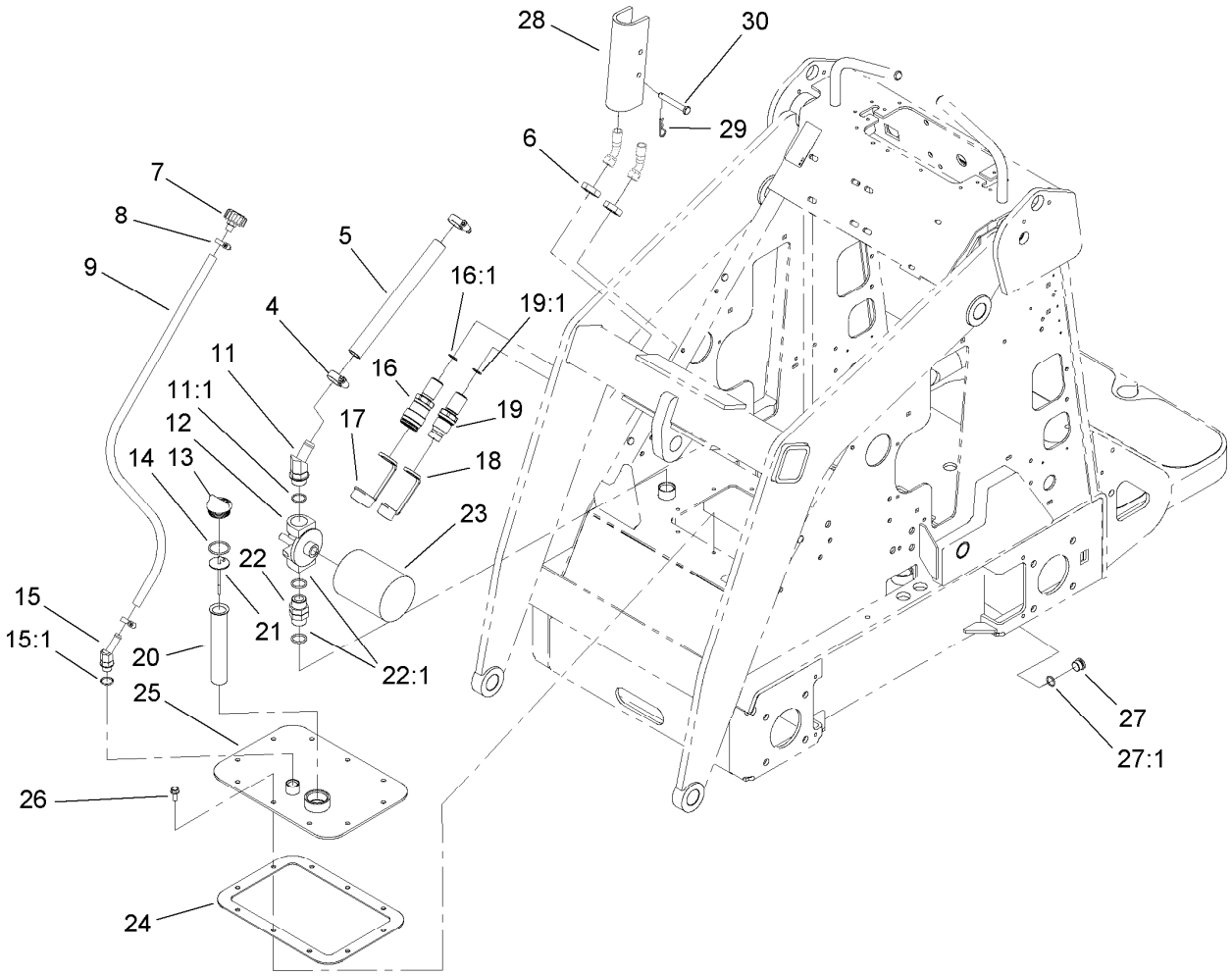

Hydraulic Tank and Filter Assembly

Ref.	Part Number	Qty.	Description
4	2412-129	2	Clamp-Hose
5	98-4745	1	Hose-HYD, Suction, Hi
6	340-74	2	Nut-Lock, Bulkhead
7	68-6150	1	Breather
8	2412-36	2	Clamp-Hose
9	98-2708	1	Hose-Vent
11	354-127	1	Fitting-Elbow45
11:1	237-81	1	O-Ring
12	92-5821	1	Head-Filter
13	93-7498	1	Plug-Plastic
14	237-123	1	O-Ring
15	354-126	1	Fitting-Elbow, 45
15:1	237-79	1	O-Ring
16	105-8394	1	Bulkhead Coupler ASM
16:1	237-65	1	O-Ring
17	100-8816	1	Cap-Dust, Coupler
18	100-8815	1	Cap-Dust, Nipple

Ref.	Part Number	Qty.	Description
19	105-8395	1	Bulkhead Nipple ASM
19:1	237-65	1	O-Ring
19:2	100-6120	1	Seal Kit ●
20	61-2790	1	Filter-Screen
21	100-2097	1	Dipstick-Oil
22	98-9906	1	Fitting-Thread, Straight
22:1	237-81	2	O-Ring
23	54-0110	1	Filter-Oil, Transmission
24	98-9927	1	Gasket-Cover
25	100-1713-01	1	Cover
26	98-9940	10	Screw-HHF
27	353-988	1	Plug-Hex
27:1	237-79	1	O-Ring
28	98-4675-01	2	Lock-Cylinder
29	3290-467	2	Pin-Hair
30	283-52	2	Pin-Clevis

● Not illustrated

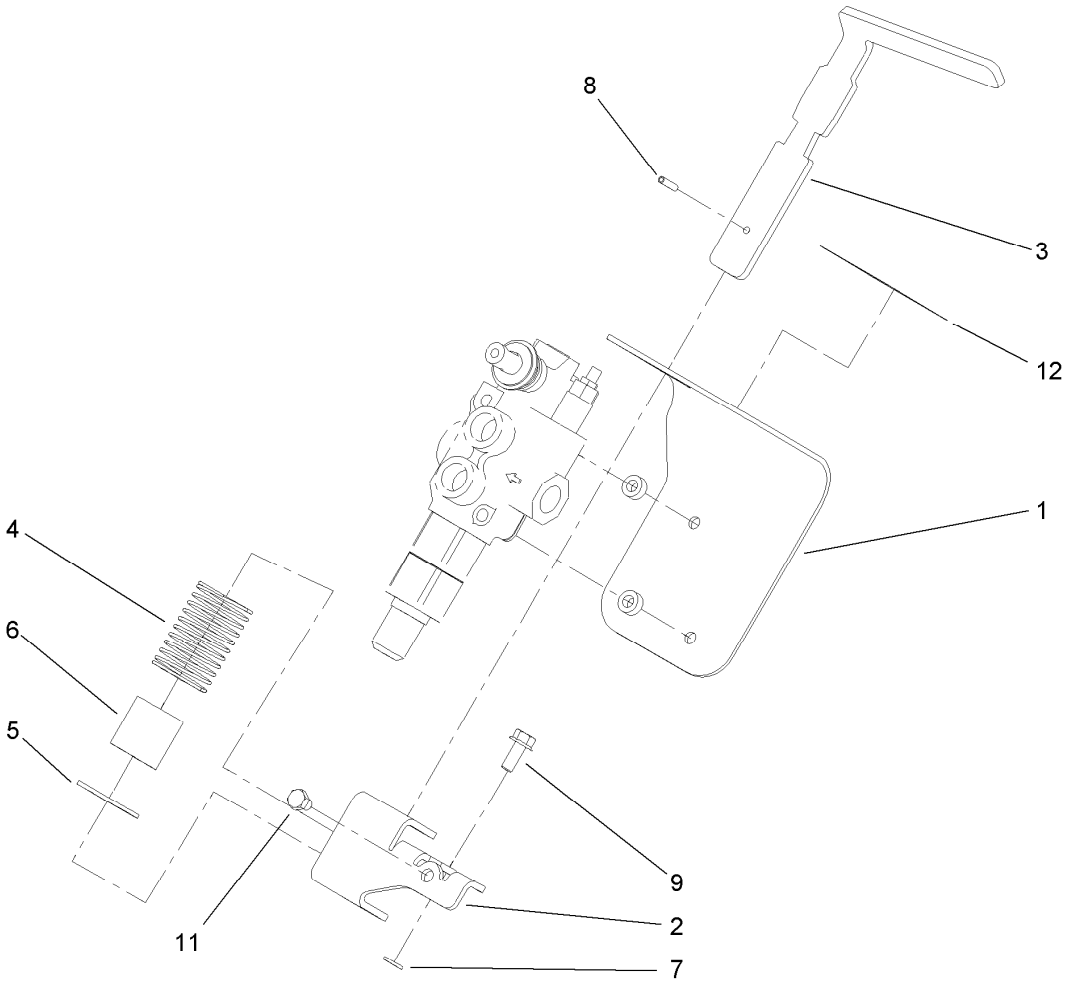

Auxiliary Control Lever Assembly

Ref.	*Part Number*	*Qty.*	*Description*
1	110-0121-03	1	Bracket-Auxiliary
2	114-1263-03	1	Mount-Lever, Auxiliary
3	110-0123	1	Handle-Lever, Auxiliary
4	110-0124	1	Spring
5	110-0125	1	Retainer-Spring, Auxiliary
6	110-0160	1	Tube-Spring
7	3253-4	1	Washer-Lock
8	32121-3	1	Pin-Spring
9	33104-020	1	Screw-HHF
11	33114-010	1	Screw-HH
12	108-4733	1	Decal-Auxiliary

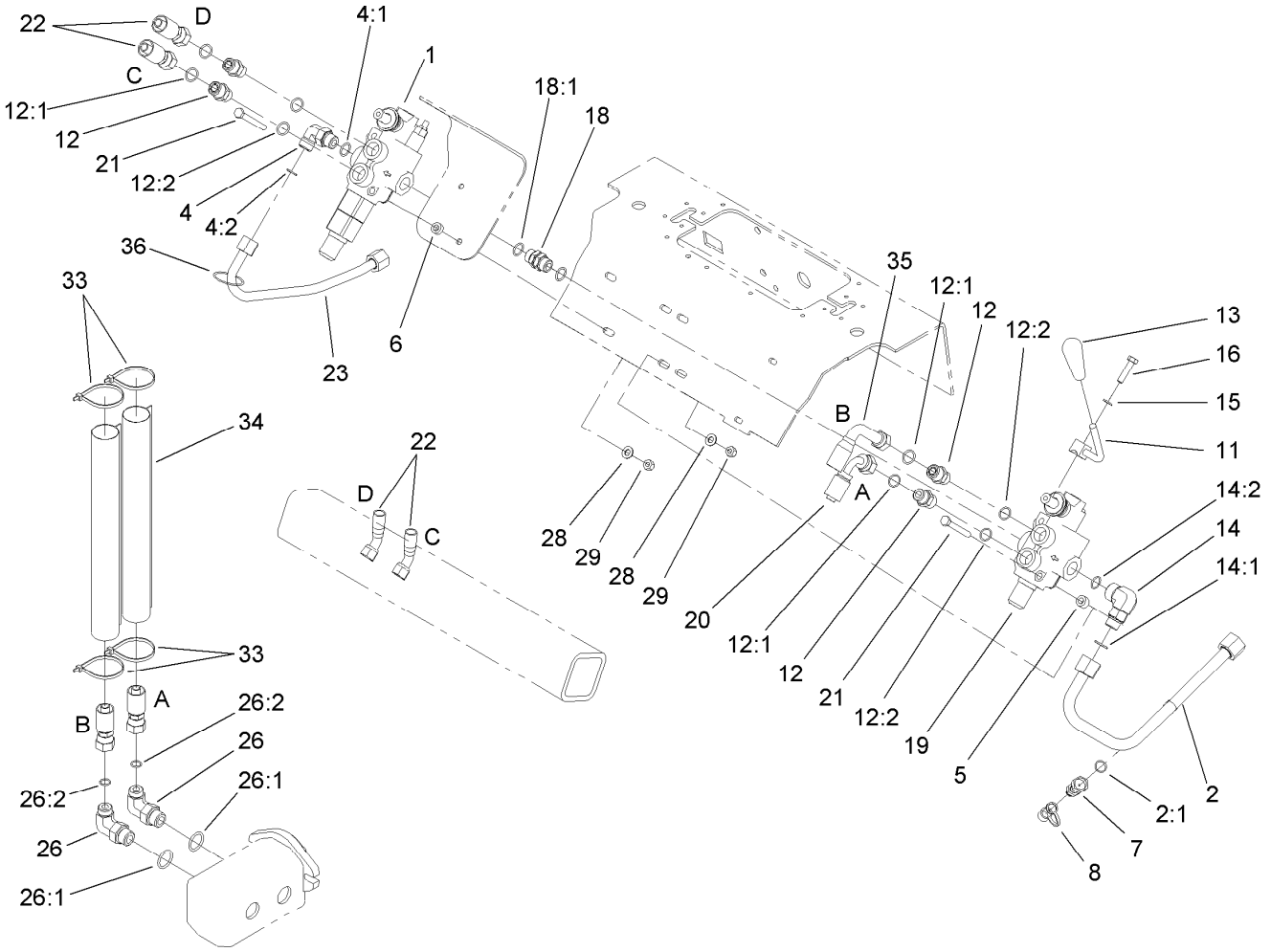

Hydraulic Valve Assembly

Ref.	Part Number	Qty.	Description
1	99-3077	1	Valve-HYD, Auxiliary
2	108-4716	1	HYD Tube ASM
2:1	237-22	1	O-Ring
4	340-98	1	Fitting-Elbow, 90 DEG
4:1	237-79	1	O-Ring
4:2	237-30	1	O-Ring
5	98-4695	2	Spacer
6	100-2085	2	Spacer
7	86-5480	1	Nipple-Test
8	354-79	1	Cap-Dust
11	108-9709-03	1	Lever-Control
12	340-4	4	Fitting-Straight
12:1	237-30	1	O-Ring
12:2	237-79	1	O-Ring
13	98-0152	1	Knob-Tapered
14	340-153	1	Fitting-Elbow, 90 DEG
14:1	237-79	1	O-Ring
14:2	237-151	1	O-Ring

Ref.	Part Number	Qty.	Description
15	3253-4	1	Washer-Lock
16	33114-035	1	Screw-HH
18	95-3209	1	Fitting-Thread, Straight
18:1	237-79	2	O-Ring
19	99-3072	1	Valve-Selector, HYD
20	98-4747	1	Hose-HYD
21	322-12	4	Screw-HH
22	100-8817	2	Hose-HYD
23	105-7879	1	Tube-HYD
26	340-105	2	Fitting-Elbow, 90 DEG
26:1	237-80	1	O-Ring
26:2	237-30	1	O-Ring
28	3256-23	4	Washer-Plain
29	3296-29	4	Nut-Lock, NI
33	3290-379	4	Tie-Cable
34	108-9715	2	Sleeve-Thermal
35	99-3008	1	Hose-HYD
36	3290-379	8	Tie-Cable

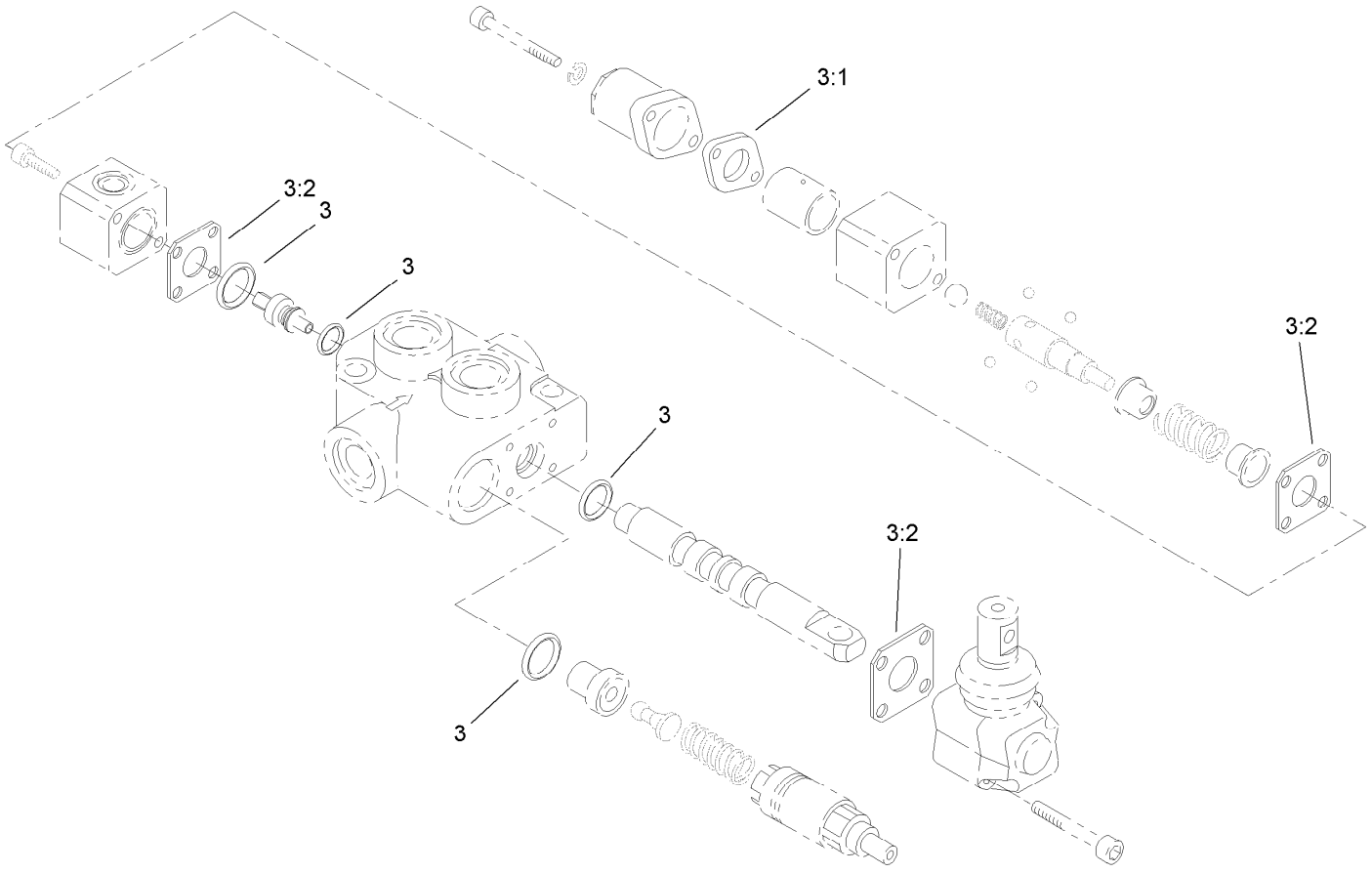

Auxiliary Hydraulic Valve Assembly No. 99-3077

Ref.	*Part Number*	*Qty.*	*Description*
3	99-4391	1	Seal Kit
3:1	99-3074	1	Gasket
3:2	99-3075	3	Gasket

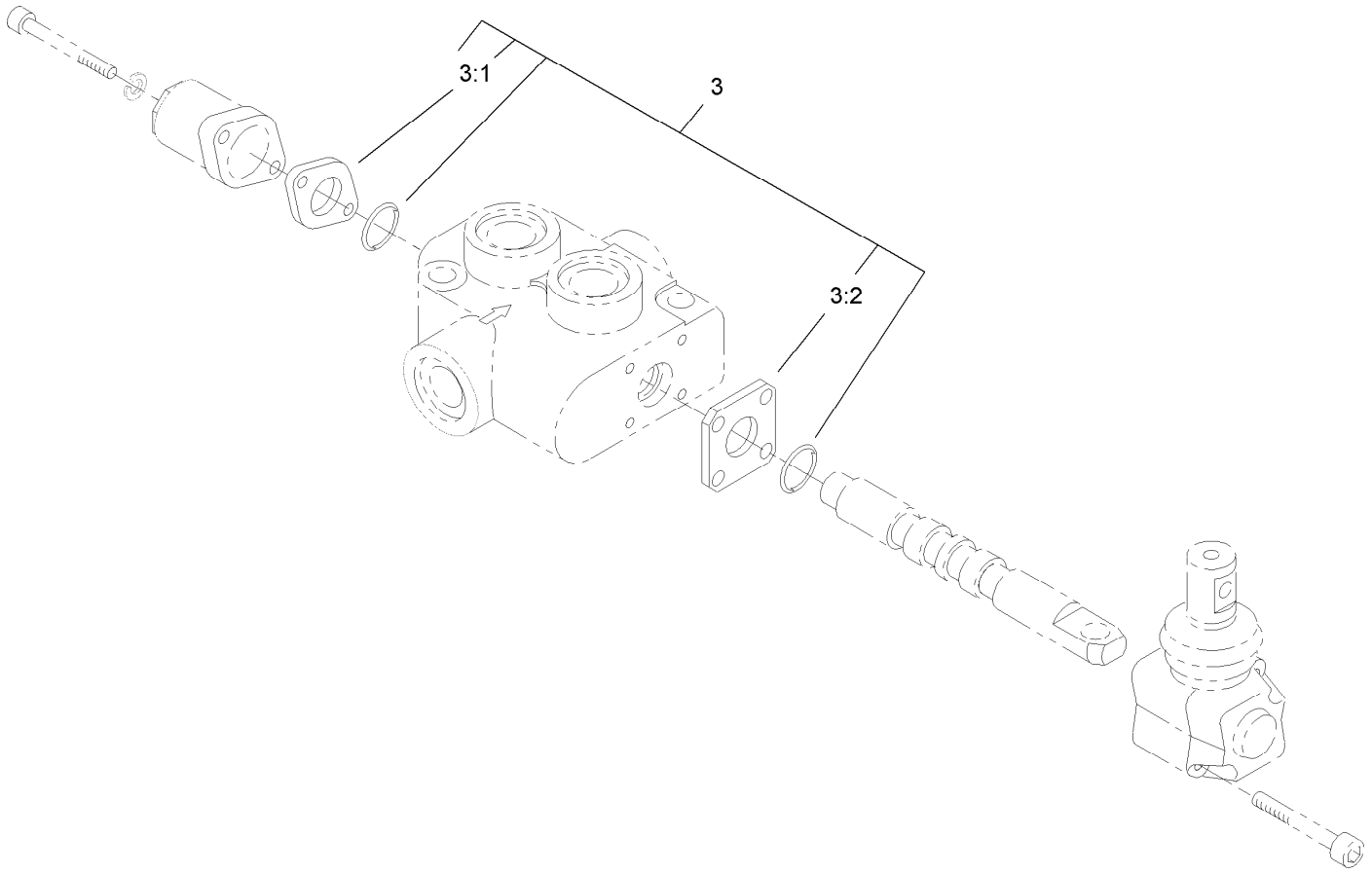

Hydraulic Selector Valve Assembly No. 99-3072

Ref.	*Part Number*	*Qty.*	*Description*
3	99-4391	1	Seal Kit
3:1	99-3074	1	Gasket
3:2	99-3075	3	Gasket

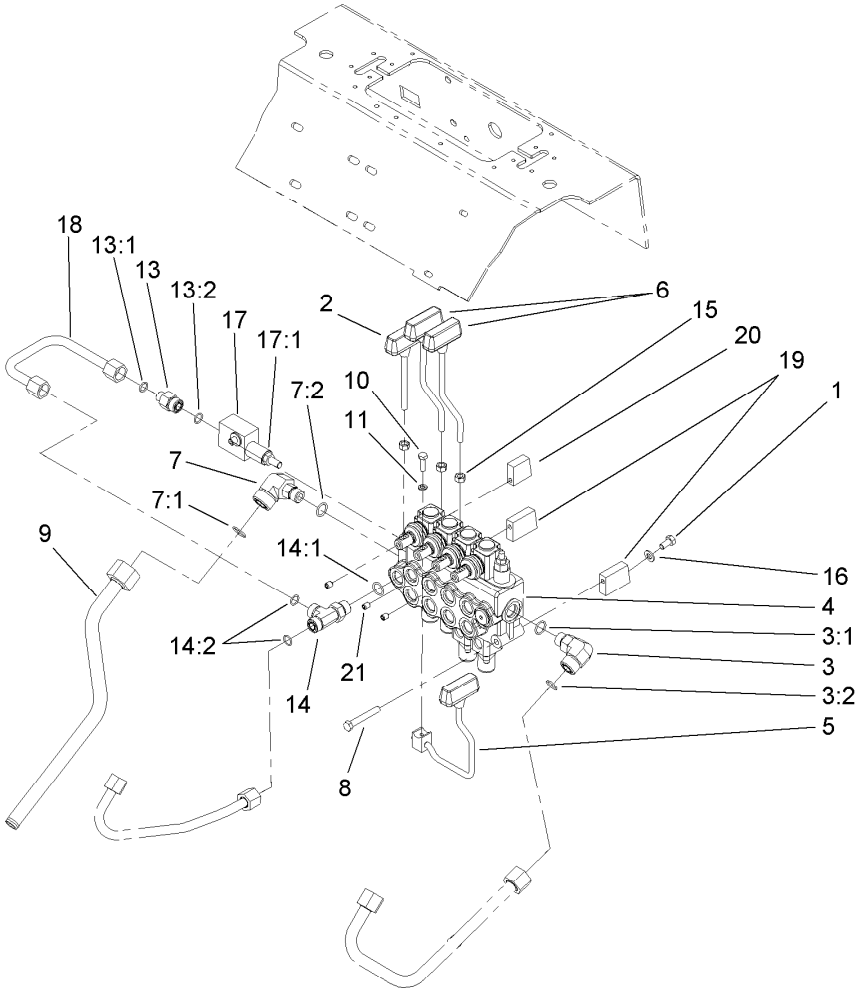

Four Spool Valve Assembly

Ref.	Part Number	Qty.	Description
1	322-2	3	Screw-HH
2	105-7881	1	Lever-Cylinder
3	340-153	1	Fitting-Elbow, 90 DEG
3:1	237-79	1	O-Ring
3:2	237-151	1	O-Ring
4	105-8377	1	HYD Four Spool Valve ASM
5	106-8165	1	Lever-Control
6	104-5733	2	Lever-Drive
7	92-5696	1	Fitting-Elbow, 90 DEG
7:1	237-58	1	O-Ring
7:2	237-79	1	O-Ring
8	322-11	3	Screw-HH
9	106-8177	1	Tube-Tank, HYD
10	321-5	1	Screw-HH
11	3253-3	1	Washer-Lock

Ref.	Part Number	Qty.	Description
13	340-5	1	Fitting-Straight
13:1	237-42	1	O-Ring
13:2	237-30	1	O-Ring
14	340-109	1	Fitting-Tee
14:1	237-79	1	O-Ring
14:2	237-30	2	O-Ring
15	33014-00	3	Nut-Hex
16	33094-00	3	Washer-Plain
17	105-7882	1	Relief Valve ASM
17:1	105-8358	1	Cartridge-Valve, Relief
17:2	105-8357	1	Seal Kit ●
18	108-4717	1	Tube-HYD
19	108-4728	2	Spacer V
20	105-7870	1	Spacer-Upper V
21	105-4068	3	Screw-Set, HSH

● Not illustrated

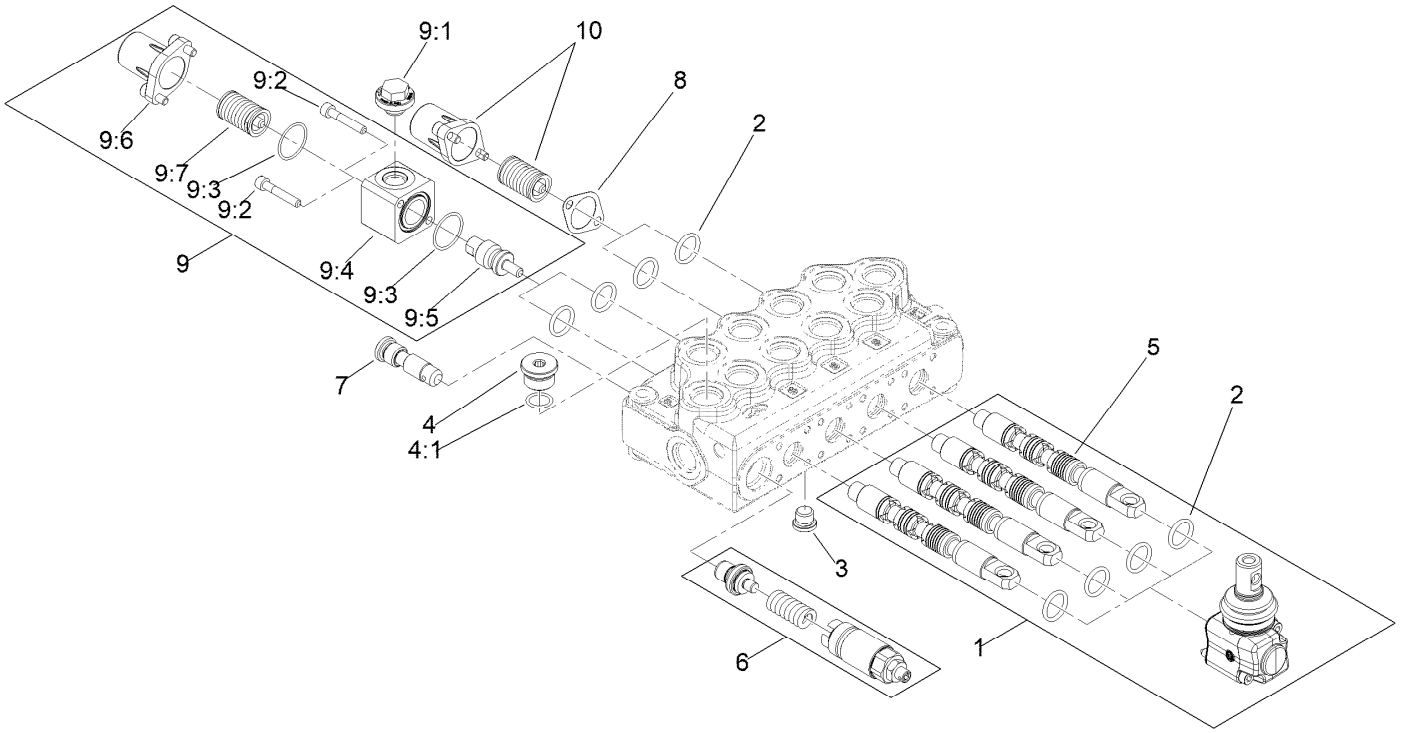

Four Spool Hydraulic Valve Assembly No. 105-8377

Ref.	*Part Number*	*Qty.*	*Description*
1	139-8891	4	Lsg/S5 Lever Kit With Screws
2	139-8886	8	O-Ring Seal, 70 Sh
3	139-8884	1	SAE 4 Plug
4	353-988	1	Plug-Hex
4:1	237-79	1	O-Ring
5	105-8441	4	Spool-Valve
6	139-8890	1	Vmd5 (Jn) Inlet Part
7	139-8880	1	Kit-Valve Body
8	99-3074	2	Gasket

Ref.	*Part Number*	*Qty.*	*Description*
9	139-8887	2	S5 Command Kit
9:1		1	Plug ●
9:2		2	Screw ●
9:3		2	Oring ●
9:4		1	Block ●
9:5		1	Pin ●
9:6		1	End Cap ●
9:7		1	Spring ●
10	161-1080	2	S5 End Cap Kit

● Not serviced separately

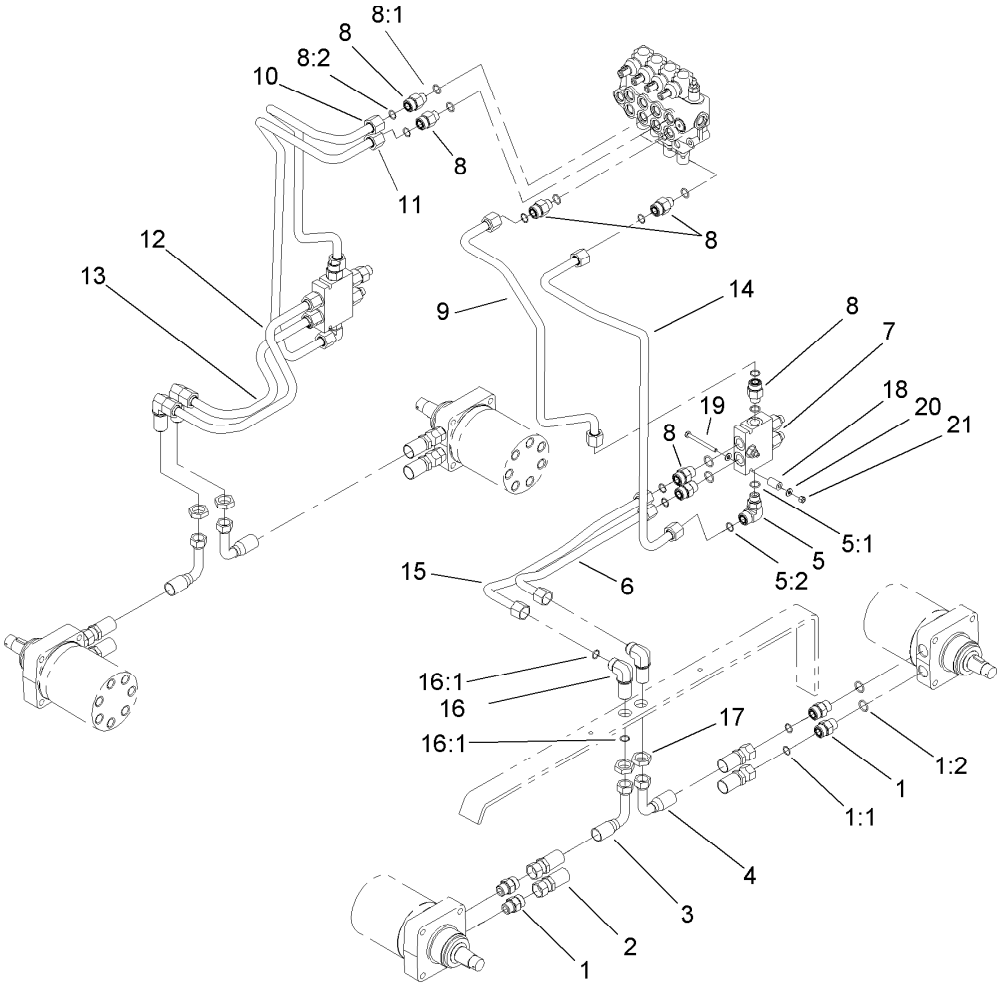

Hydraulic Motor Assembly

Ref.	Part Number	Qty.	Description
1	340-7	8	Fitting-Straight
1:1	237-65	1	O-Ring
1:2	237-80	1	O-Ring
2	99-3012	2	Hose-HYD
3	99-3010	2	Hose-HYD
4	99-3011	2	Hose-HYD
5	340-153	2	Fitting-Elbow, 90 DEG
5:1	237-79	1	O-Ring
5:2	237-151	1	O-Ring
6	99-3022	1	Tube-HYD
7	99-3040	2	HYD Counterbalance Valve ASM
8	340-155	10	Fitting-Straight
8:1	237-79	1	O-Ring
8:2	237-151	1	O-Ring

Ref.	Part Number	Qty.	Description
9	108-9729	1	Tube-HYD
10	108-9727	1	Tube-HYD
11	108-9726	1	Tube-HYD
12	99-3025	1	Tube-HYD
13	99-3028	1	Tube-HYD
14	108-9725	1	Tube-HYD
15	99-3026	1	Tube-HYD
16	340-72	4	Fitting-Bulkhead, 90 DEG
16:1	237-65	2	O-Ring
17	340-74	4	Nut-Lock, Bulkhead
18	99-3057	2	Spacer-Valve
19	321-23	2	Screw-HH
20	3256-22	4	Washer-Flat
21	3296-42	2	Nut-Lock, NI

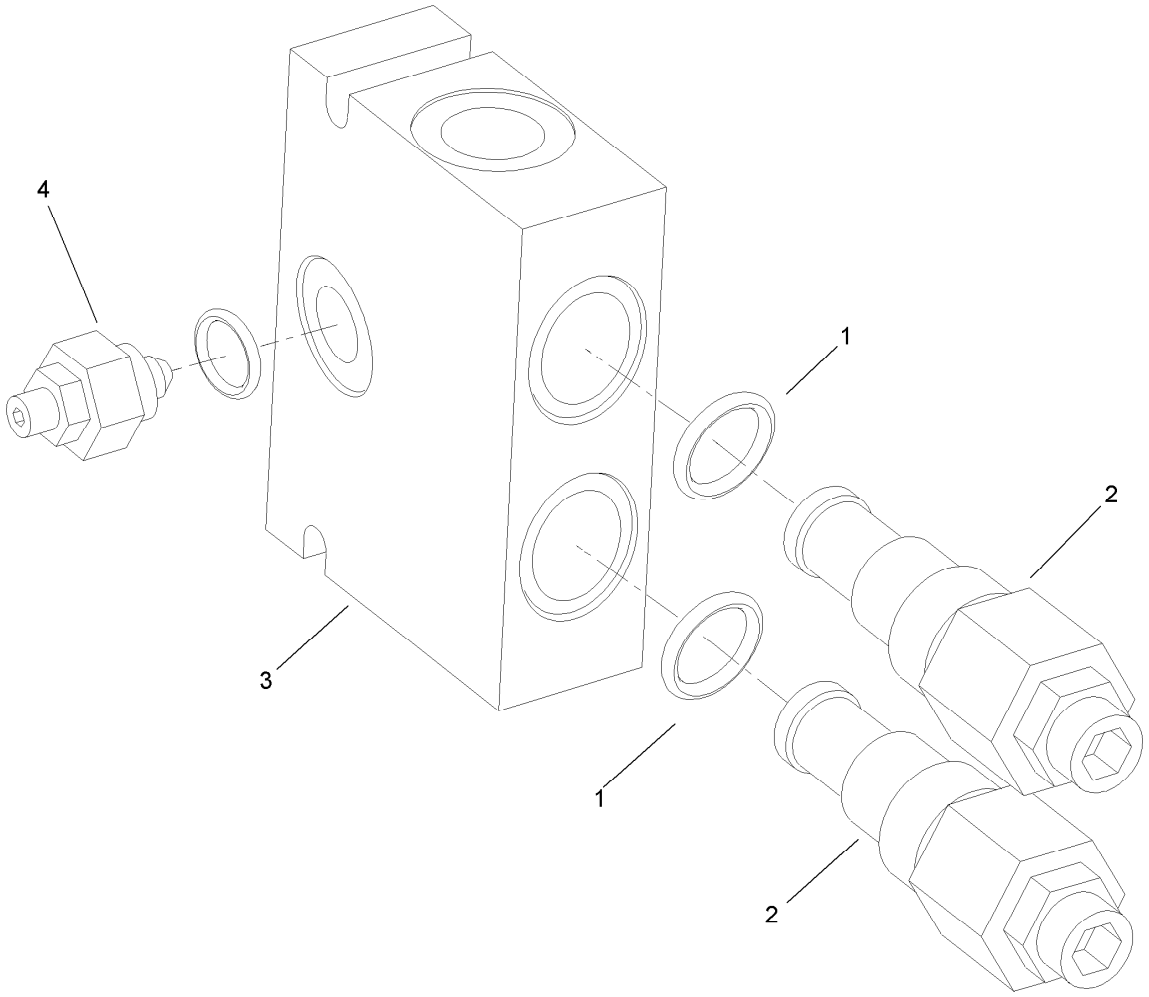

Counterbalance Valve Assembly No. 99-3040

Ref.	*Part Number*	*Qty.*	*Description*
1	105-4099	1	Seal Kit ●
2	99-3271	2	Valve-Cartridge
3	100-8864	1	Manifold ASM
4	100-8865	1	Needle Valve ASM

● Not illustrated

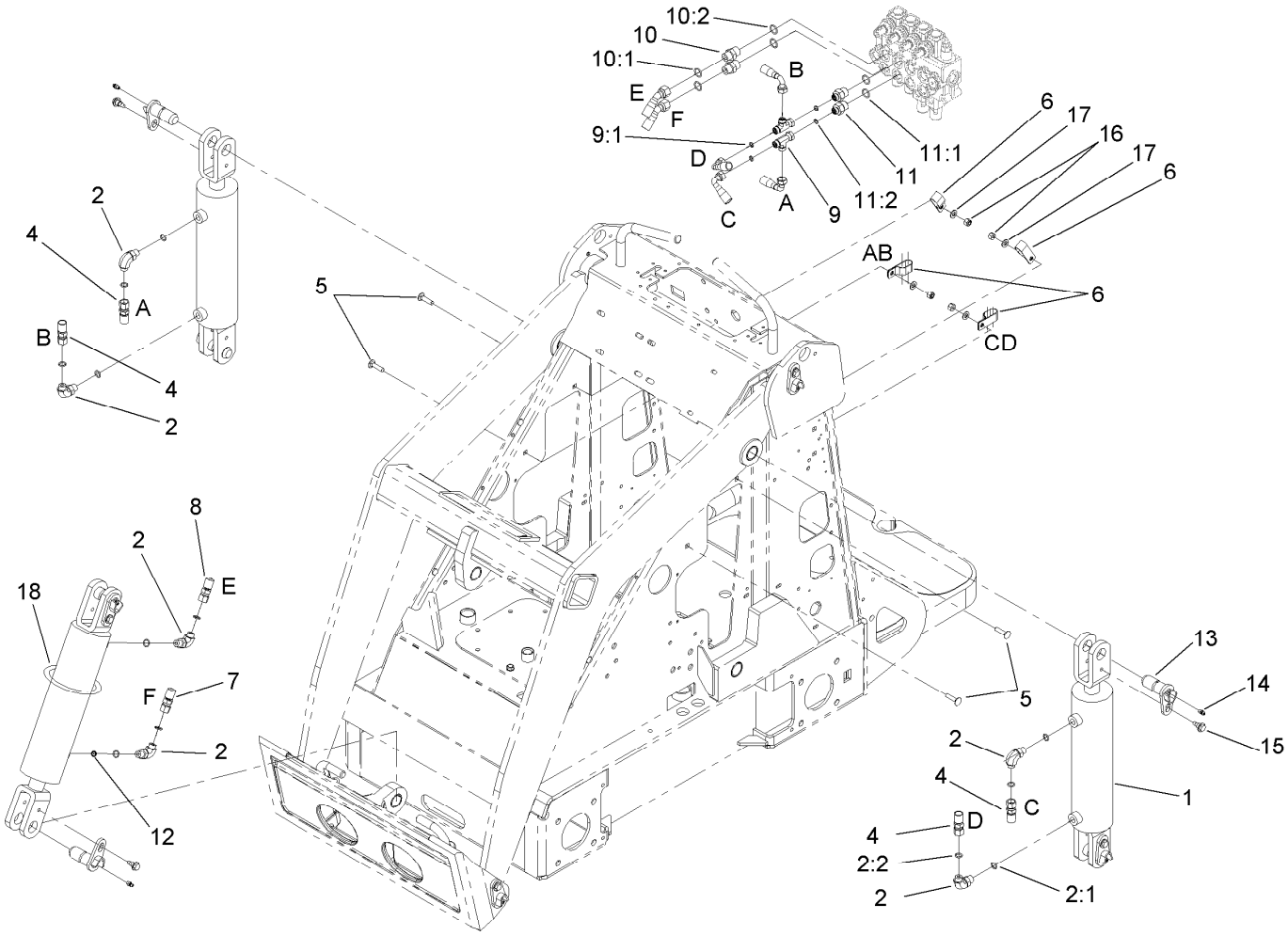

Hydraulic Cylinder Assembly

Ref.	*Part Number*	*Qty.*	*Description*
1	105-7867	3	HYD Cylinder ASM
2	340-82	6	Fitting-Elbow, 90 DEG
2:1	237-42	1	O-Ring
2:2	237-21	1	O-Ring
4	98-4725	4	Hose-HYD
5	3230-3	4	Screw-CARR
6	2412-137	4	Clamp-R, Double
7	98-4726	1	Hose-HYD
8	98-4727	1	Hose-HYD
9	340-151	2	Fitting-Tee
9:1	237-75	3	O-Ring
10	340-3	2	Fitting-Straight
10:1	237-22	1	O-Ring
10:2	237-79	1	O-Ring
11	340-133	2	Fitting-STR
11:1	237-79	1	O-Ring
11:2	237-21	1	O-Ring
12	108-4714	1	Orifice-Port Insert, One Way
13	112-2609	6	Pin-Pivot
14	302-5	6	Fitting-Grease
15	99-5105	6	Screw-Shoulder
16	3296-29	4	Nut-Lock, NI
17	3256-23	4	Washer-Plain
18	3334-945	1	Tie-Cable

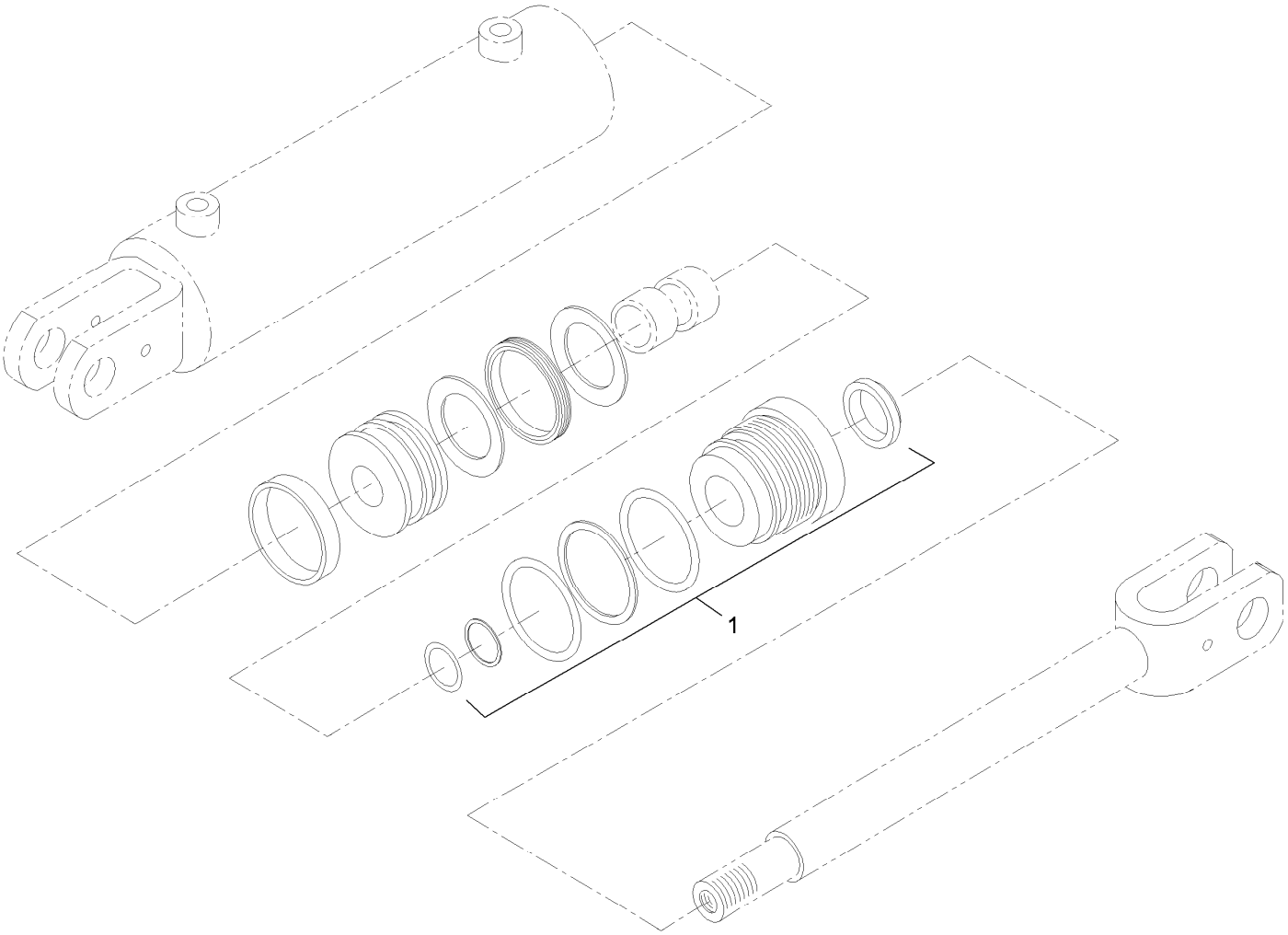

Hydraulic Cylinder Assembly No. 105-7867

Ref.	*Part Number*	*Qty.*	*Description*
1	105-8356	1	Seal Kit

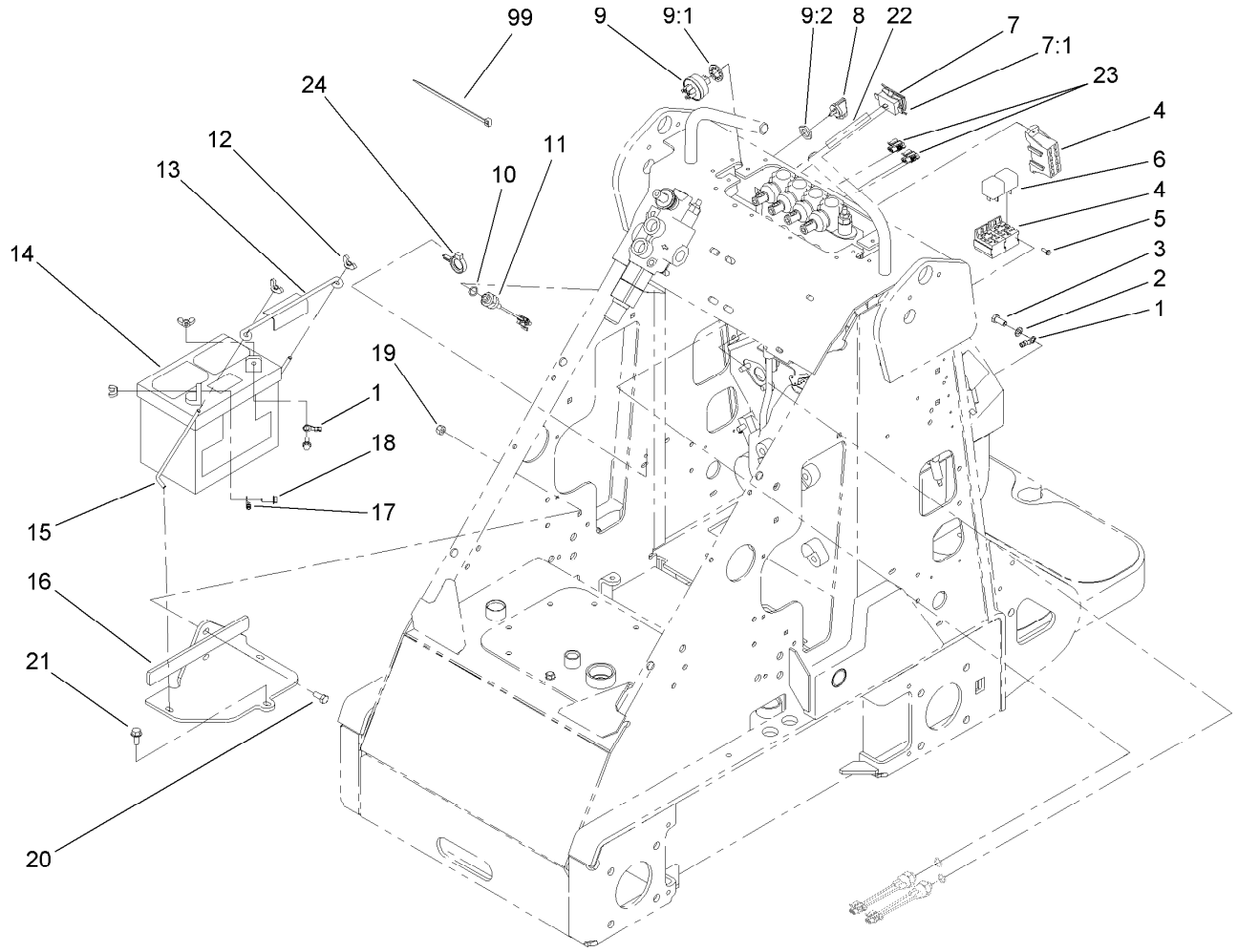

Electrical Component Assembly

Ref.	Part Number	Qty.	Description
1	111075	1	Wire ASM
2	3255-8	1	Washer-Lock
3	33114-020	1	Screw-HH
4	104-7411	1	Harness-Wire
5	32144-87	3	Screw-HWHTF
6	98-7249	2	Relay
7	105-4067	1	Hourmeter-Inductive
7:1	104-4234	1	Clip-Mounting
8	63-8360	2	Key-Ignition
9	111216	1	Ignition Switch ASM
9:1	9201604	1	Washer-Lock
9:2	101884	1	Nut
10	237-42	3	O-Ring
11	72-4310	3	Switch-Ball

Ref.	Part Number	Qty.	Description
12	32103-22	4	Nut-Wing
13	113010	1	Holddown-Battery
14	104-2492	1	Battery-Dry
15	99-5027	2	Retainer-Battery
16	99-3060-03	1	Battery Mount ASM
17	100-1712	1	Cable-Positive
18	3234-4	2	Screw-HHF
19	3296-29	2	Nut-Lock, NI
20	322-4	2	Screw-HH
21	32144-70	1	Screw-HWHTF
22	104-7408	1	Wire-Hourmeter
23	99-1433	2	Connector-Female
24	105-1853	1	Clamp-Hose
99	3290-381	5	Tie-Cable

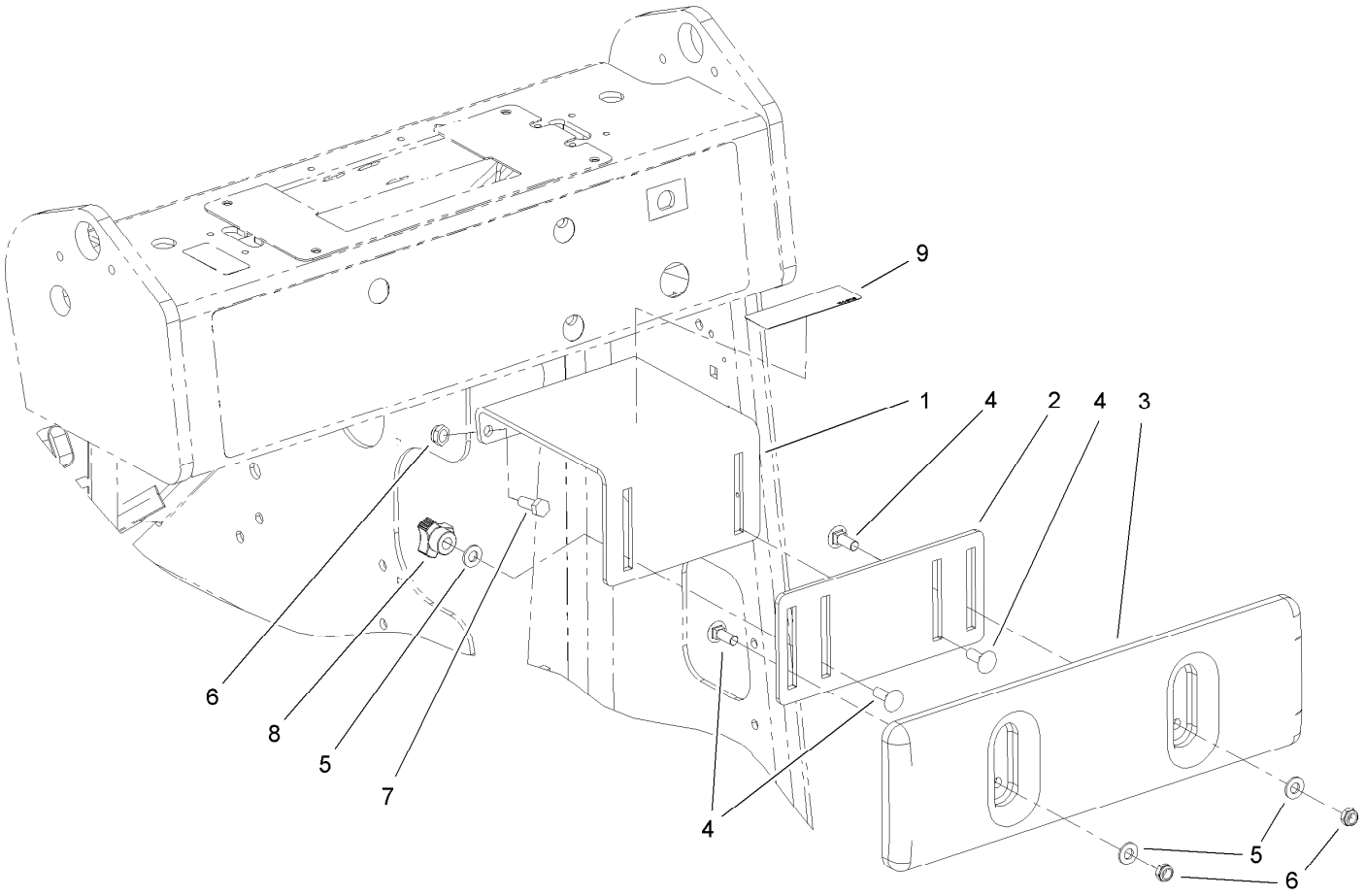

Thigh Support Assembly

Ref.	*Part Number*	*Qty.*	*Description*
1	105-0297-03	1	Thigh Support ASM
2	105-0337-03	1	Plate-Adjusting
3	105-0333	1	Support-Thigh
4	3230-16	4	Screw-CARR
5	3256-70	4	Washer-Flat
6	3296-72	4	Nut-Lock, NI
7	322-4	2	Screw-HH
8	104-6156	2	Knob-Adjustment
9	104-6108	1	Decal-Manual

Attachments and Accessories

For 22318 323 Compact Utility Loader

Product Name	Model/Part
Tire Chain Kit	100-4140
Helmet-Face Shield	100-4143
Light Kit	100-8940
Narrow Tire ASM	104-0572
Tube-Tire (18 x 8.50-10)	105-4070
Rubber Foot Mat	105-5805
Tube-Tire (18 X 8.50-8)	106396
CE Conversion Kit	22366
4 Cubic Foot Standard Bucket	22409
Loose Materials Bucket	22410
48in Hydraulic Blade	22414
Rotary Broom	22415
Counterweight	22417
Bore Drive Head	22420
Rod and Reamer	22421
Multi-Purpose Tool	22423
Power Box Rake	22425
Stump Grinder	22429
Tree Forks	22438
Cement Bowl	22442
The Eliminator Scarifier/Groomer	22443
40in Tiller	22445
Snowthrower	22456
Trencher Head	22470
High-Speed Trencher Head	22471
Narrow Bucket	22520
Over-the-Tire Rubber Tracks	22662
Auger Head	22802
Universal Swivel Auger Head	22803
Vibratory Plow	22911
Soil Cultivator	23101
Seeder Box Kit, Soil Cultivator	23120
Concrete Breaker	23135
Backhoe	23163
Adjustable Forks	23164
Leveler	23165
Tube	232-37
LH Wheel And Tire ASM	98-2747
Wheel and Tire ASM	98-4709
Spark Arrestor	98-9099
RH Wheel And Tire ASM	99-1447
RH Wheel And Tire ASM (Powerlug)	99-3140
LH Wheel And Tire ASM (Powerlug)	99-3141
Hydraulic Relief Valve Kit	99-4360

Notes:



Count on it.