Form No. 3367-312 Rev B

TORO®

Count on it.

Parts Catalog

TRX-26 Trencher

Model No. 22974—Serial No. 311000001 and Up

Register at www.Toro.com.
Original Instructions (EN)

3367-312 B

Ordering Replacement Parts

To order replacement parts, please supply the part number, the quantity, and the description of each part desired.

Understanding Reference Numbers

Each identified part in an illustration has a reference number. The reference number for a part also appears in the parts list, along with other information about the part.

This catalog uses two special reference number formats, one to indicate parts in a service assembly and another to indicate the quantity of a given part in an illustration.

Service Assembly Reference Numbers

Parts in service assemblies have reference numbers in the form a:b. The a represents the reference number of the entire service assembly and the b represents a sequential number unique to each part within the service assembly.

For example, a wheel assembly might be identified by reference number 6, the tire by 6:1, the valve by 6:2, and the wheel by 6:3. When you order the assembly identified by reference number 6, you receive all parts identified by reference numbers 6:1,6:2, and 6:3. However, you may also order any part individually. Reference numbers of this type appear in illustration and in parts lists.

Reference Numbers Indicating Quantity

In an illustration, if a reference number indicates more than one part, the reference number has the form nX y. The n represents the quantity of the part, the X is the multiplication symbol, and the y represents the reference number.

For example, in an illustration, the reference number 2X 37 means that two of the parts identified by reference number 37 are indicated.

Contents

Main Frame Assembly . . . 4
Track and Drive Assembly . . . 5
Hydraulic Pump Assembly No. 117-6410 . . . 7
Hydraulic Pump Assembly No. 117-6409 . . . 8
Hydraulic Motor Assembly No. 104-8470 . . . 9
Parking Brake Assembly . . . 10
Engine Assembly . . . 11
Gear Pump Assembly No. 117-6307 . . . 13
Control Assembly . . . 14
Trencher Assembly . . . 16
Hydraulic Cylinder Assembly No. 112-2602 . . . 17
Control Tower Assembly . . . 18
Hydraulic Control Assembly . . . 20
2-Spool Valve Assembly No. 115-4062 . . . 21
Oil Cooler Assembly . . . 22
Hydraulic Hose Routing Assembly . . . 23
Electrical Assembly . . . 24
Cylinder and Crankcase Assembly . . . 25
Piston and Crankshaft Assembly . . . 26
Valve and Camshaft Assembly . . . 27
Lubrication Equipment Assembly . . . 28
Cooling Equipment Assembly . . . 29
Electric Equipment Assembly . . . 30
Control Equipment Assembly . . . 31
Carburetor Assembly . . . 32
Air Filter and Muffler Assembly . . . 34
Fuel Tank and Valve Assembly . . . 35
Starter Assembly . . . 36
Label Set . . . 37
Attachments and Accessories . . . 38

© 2023—The Toro® Company
8111 Lyndale Avenue South
Bloomington, MN 55420

Contact us at www.Toro.com.
Printed in the USA.
All Rights Reserved

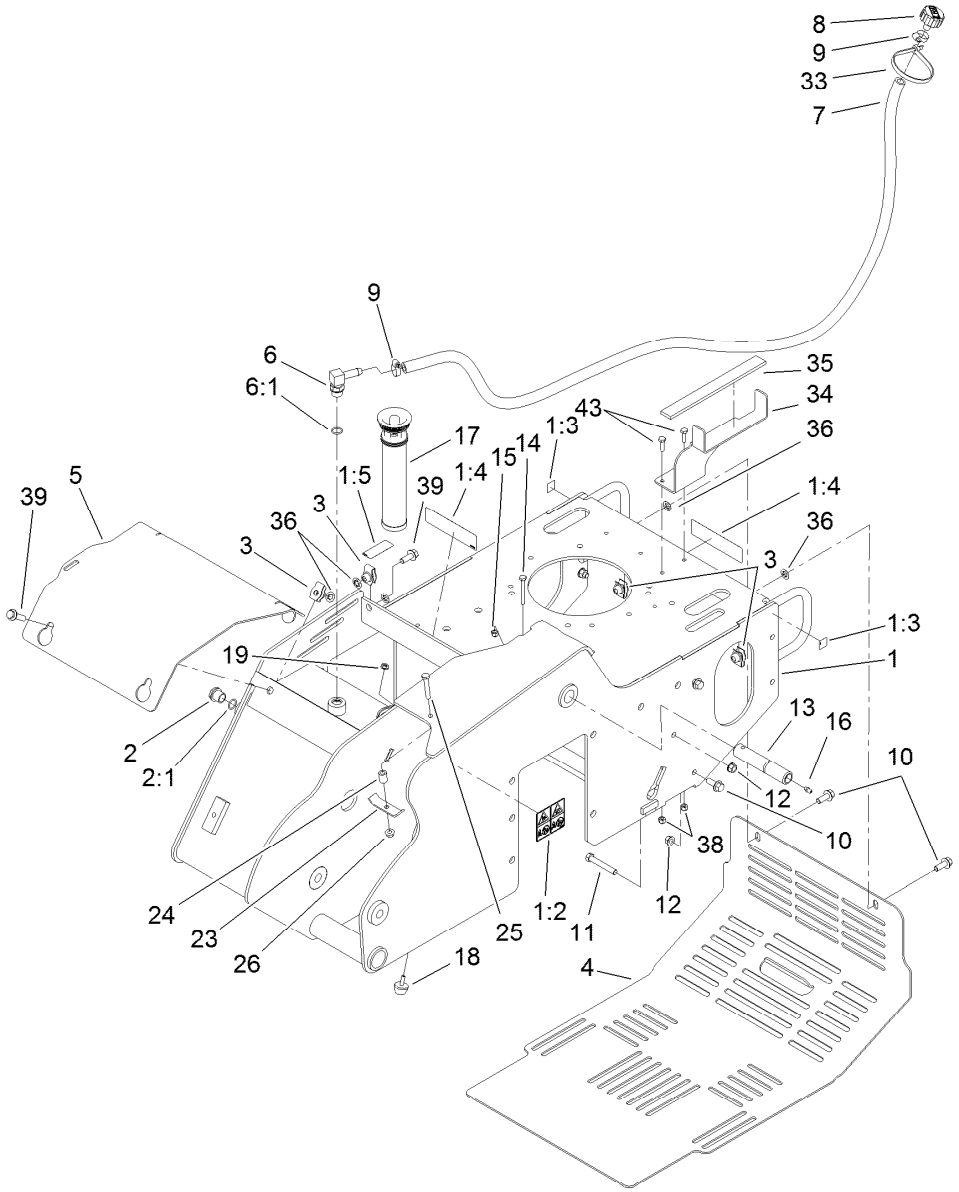

Main Frame Assembly

Ref.	Part Number	Qty.	Description
1	114-8630	1	Main Frame ASM
1:2	100-4650	1	Decal-Warning
1:3	93-9084	2	Decal-Point, Lift
1:4	93-7814	2	Decal-Danger
1:5	93-6686	1	Decal-Oil, HYD
2	114-3075	1	Sight Glass ASM
2:1	237-79	1	O-Ring
3	112-4576	5	Nut-Clip, U
4	115-6503-01	1	Cover-Rear
5	119-4566-03	1	Plate-Cover, Front
6	354-120	1	Fitting-Elbow, 90
6:1	237-79	1	O-Ring
7	114-3042	1	Hose-Breather
8	68-6150	1	Breather
9	2412-36	2	Clamp-Hose
10	3234-11	2	Screw-HHF
11	323-12	1	Screw-HH
12	32128-40	2	Nut-Flange

Ref.	Part Number	Qty.	Description
13	120-7352	1	Pin-Pivot
14	321-18	1	Screw-HH
15	3296-42	1	Nut-Lock, NI
16	302-5	1	Fitting-Grease
17	114-3039	1	Filter-Tank, In
18	1-523420	1	Bumper
19	32128-33	1	Nut-HF
23	100-4860	1	Bracket-Clamp
24	93-5023	1	Spacer
25	322-10	1	Screw-HH
26	32128-20	1	Nut-HF
33	3334-945	1	Tie-Cable
34	117-6407-01	1	Bracket-Fuel Tank
35	117-6417	1	Pad-Foam
36	107-3154	5	Nut-Push
38	3296-42	2	Nut-Lock, NI
39	3234-18	3	Screw-HHF
43	321-6	2	Screw-HH

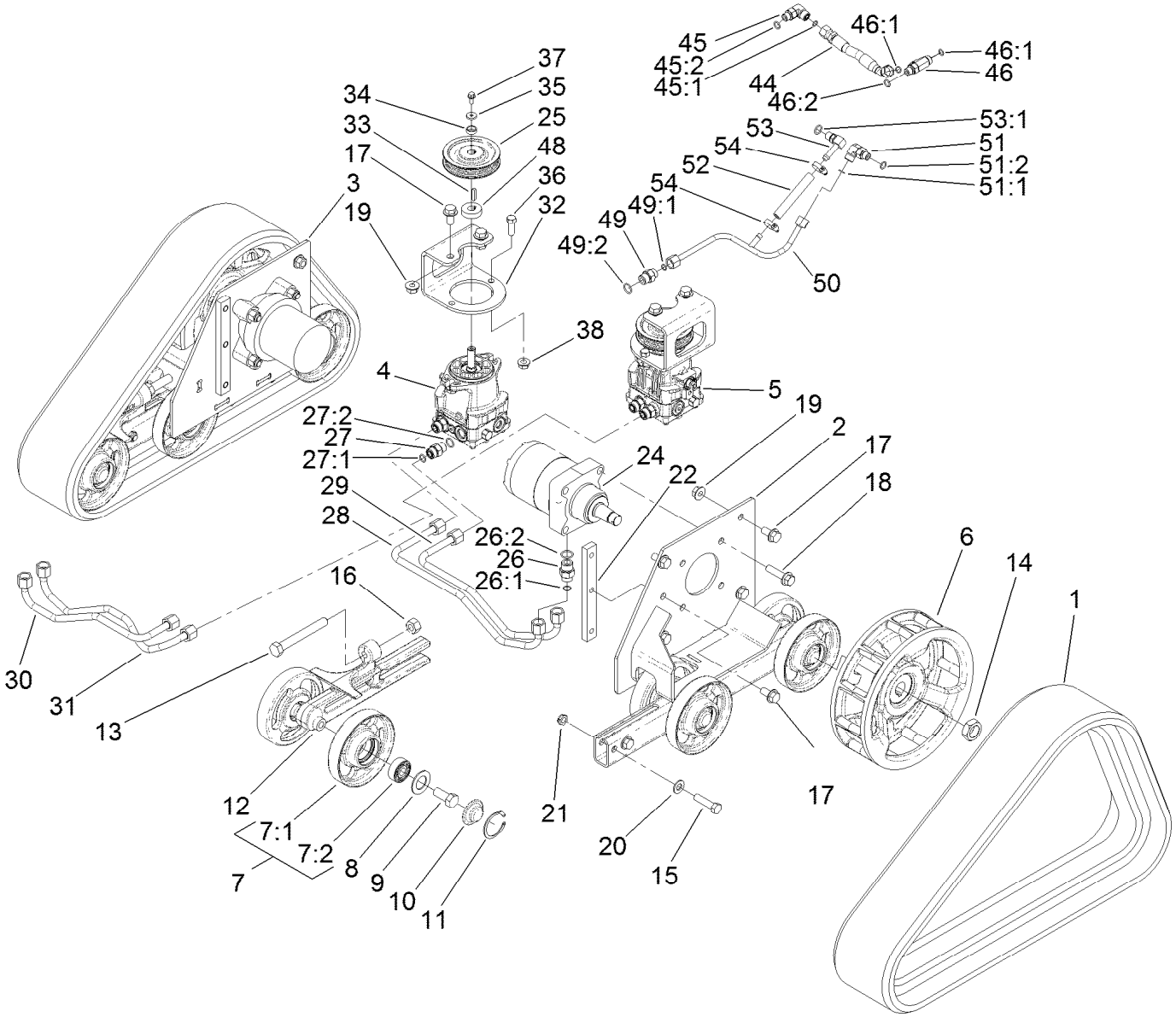

Track and Drive Assembly

Ref.	Part Number	Qty.	Description
1	112-4816	2	Track-Rubber
2	114-2992-03	1	Frame-Track, LH
3	114-2993-03	1	Frame-Track, RH
4	117-6409	1	RH HYD Pump ASM
5	117-6410	1	LH HYD Pump ASM
6	117-6426-03	2	Wheel-Drive
7	112-4817	12	Wheel-Tensioner
7:1	114-3014-03	1	Wheel-Track
7:2	93-4237	1	Bearing
8	106-7585	12	Gasket-Bogie
9	327-4	12	Screw-HH
10	106-7557	12	Cap-Wheel, Bearing
11	106-7595	12	Ring-Snap, Internal
12	114-3077-03	2	Tensioner-Track
13	112-4874	2	Screw-HH, TAP
14	106-8159	2	Nut-Lock
15	325-8	4	Screw-HH
16	3217-11	2	Nut-Hex
17	3234-6	10	Screw-HHF
18	3234-27	8	Screw-HHF
19	32128-49	8	Nut-HHF

Ref.	Part Number	Qty.	Description
20	3256-26	4	Washer-Flat
21	3296-45	4	Nut-Hex
22	114-3091	2	Bar-Thread
24	104-8470	2	HYD Wheel Motor ASM
25	115-1298	2	Sheave
26	340-6	4	Fitting-Straight
26:1	237-30	1	O-Ring
26:2	237-80	1	O-Ring
27	340-4	4	Fitting-Straight
27:1	237-30	1	O-Ring
27:2	237-79	1	O-Ring
28	115-1285	1	Tube-HYD
29	115-1286	1	Tube-HYD
30	115-1287	1	Tube-HYD
31	115-1288	1	Tube-HYD
32	115-1289-03	2	Bracket-Mount, Pump
33	80-6090	2	Key-Pump
34	108-4211	2	Bushing
35	73-3580	2	Washer
36	324-5	4	Screw-HH
37	33103-016	2	Screw-HHF

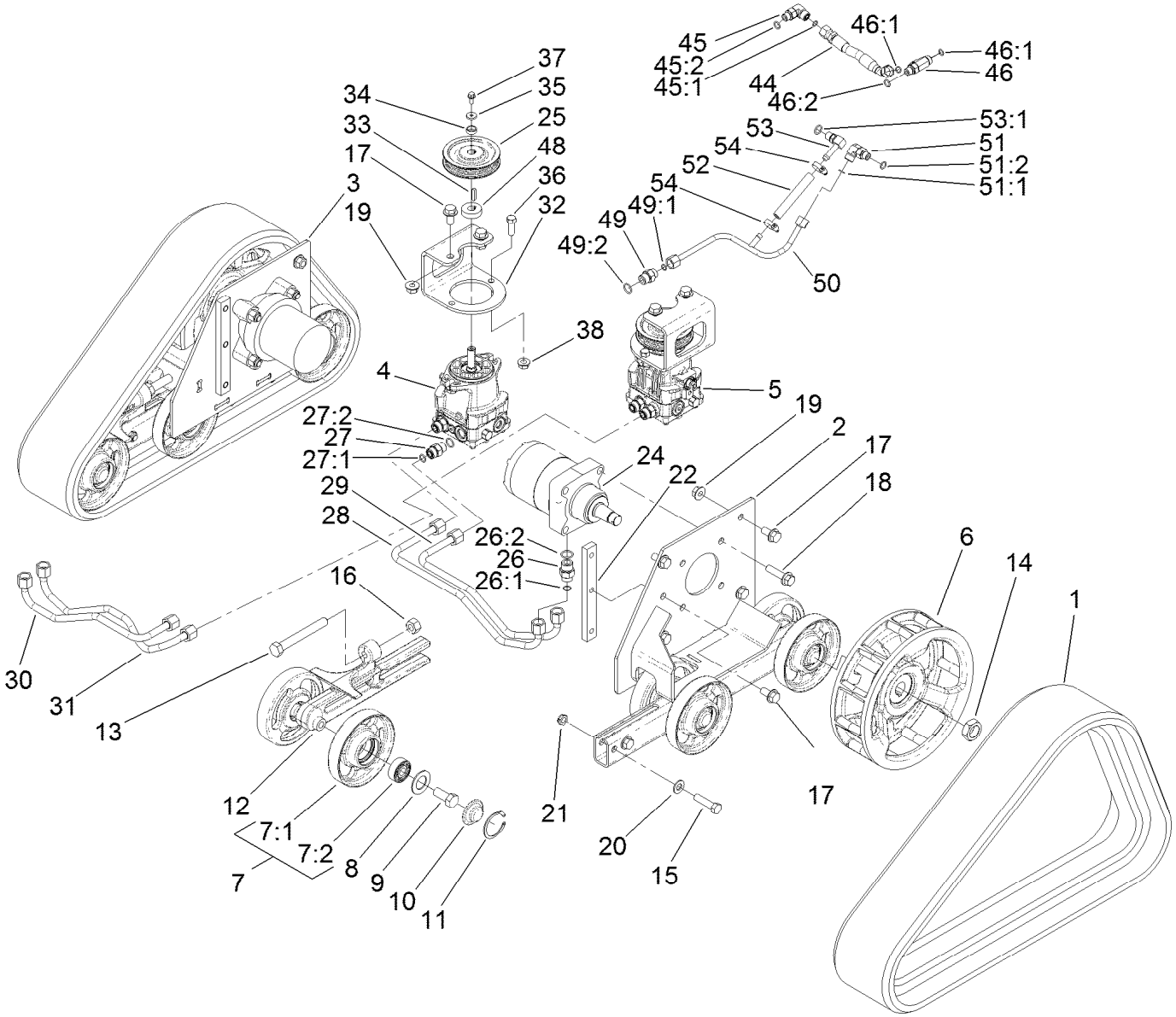

Track and Drive Assembly (continued)

Ref.	Part Number	Qty.	Description
38	32128-42	4	Nut-HF
44	115-1297	1	Hose-HYD
45	340-77	1	Fitting-Elbow, 90 DEG
45:1	237-22	1	O-Ring
45:2	237-42	1	O-Ring
46	340-86	1	Fitting-Tee
46:1	237-22	2	O-Ring
46:2	237-42	1	O-Ring
48	115-4002	2	Spacer
49	340-3	1	Fitting-Straight

Ref.	Part Number	Qty.	Description
49:1	237-22	1	O-Ring
49:2	237-79	1	O-Ring
50	117-1305	1	Tube-HYD
51	340-77	1	Fitting-Elbow, 90 DEG
51:1	237-22	1	O-Ring
51:2	237-42	1	O-Ring
52	115-4083	1	Hose
53	100-4887	1	Fitting-Elbow, 90
53:1	237-42	1	O-Ring
54	2412-36	2	Clamp-Hose

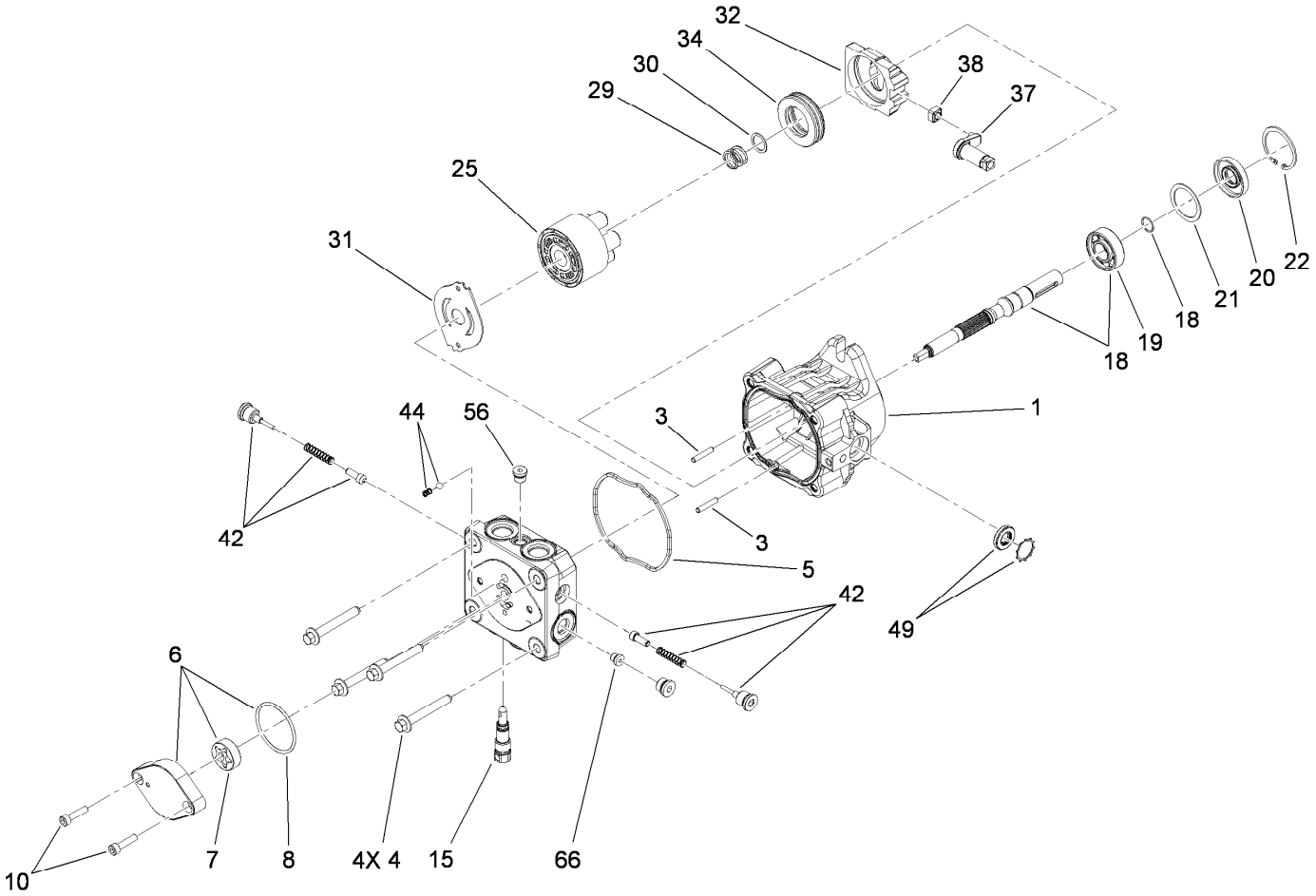

Hydraulic Pump Assembly No. 117-6410

Ref.	Part Number	Qty.	Description
1	115-4464	1	Housing Kit
3	106-8753	2	Pin-Headless, Straight
4	106-8754	4	Bolt-HF
5	106-8755	1	O-Ring
6	106-8756	1	Charge Pump Kit
7	104-2122	1	Gerotor ASM
8	106-8757	1	O-Ring
10	104-2111	2	Capscrew
15	106-8759	1	Bypass Valve Kit
18	103-2664	1	Input Shaft Kit
19	104-5311	1	Bearing-Ball
20	104-5310	1	Seal-Lip
21	104-5308	1	Spacer
22	104-5309	1	Ring-Retaining
25	103-2666	1	Cylinder Block Kit

Ref.	Part Number	Qty.	Description
29	94-1936	1	Spring-Block
30	94-1937	1	Washer-Thrust
31	105-6185	1	Plate-Valve
32	94-1907	1	Swashplate-Variable
34	94-6922	1	Bearing-Thrust
37	115-4458	1	Arm-Trunnion, Tapered Square
38	94-1910	1	Guide-Slot
42	98-3252	2	Valve-Check (W/Poppet)
44	106-8760	1	Charge Relief Valve Kit
49	114-8155	1	Trunnion Seal Kit
56	106-8762	1	Plug-HSH
66	106-8763	1	Plug-HSH
99	105-6184	1	Seal Overhaul Kit ●

● Not illustrated

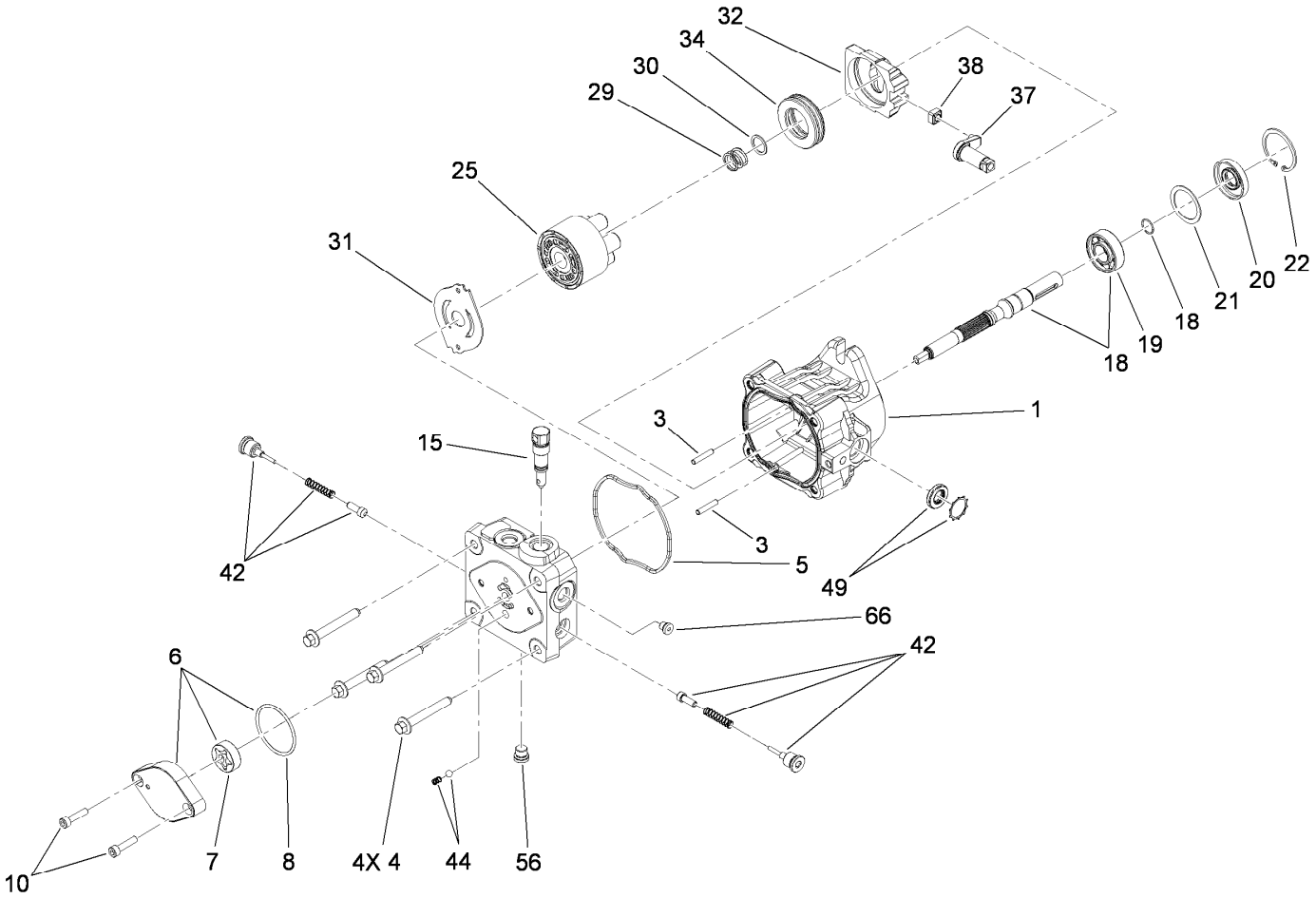

Hydraulic Pump Assembly No. 117-6409

Ref.	Part Number	Qty.	Description
1	115-4464	1	Housing Kit
3	106-8753	2	Pin-Headless, Straight
4	106-8754	4	Bolt-HF
5	106-8755	1	O-Ring
6	106-8756	1	Charge Pump Kit
7	104-2122	1	Gerotor ASM
8	106-8757	1	O-Ring
10	104-2111	2	Capscrew
15	106-8759	1	Bypass Valve Kit
18	103-2664	1	Input Shaft Kit
19	104-5311	1	Bearing-Ball
20	104-5310	1	Seal-Lip
21	104-5308	1	Spacer
22	104-5309	1	Ring-Retaining
25	103-2666	1	Cylinder Block Kit

Ref.	Part Number	Qty.	Description
29	94-1936	1	Spring-Block
30	94-1937	1	Washer-Thrust
31	105-6185	1	Plate-Valve
32	94-1907	1	Swashplate-Variable
34	94-6922	1	Bearing-Thrust
37	115-4458	1	Arm-Trunnion, Tapered Square
38	94-1910	1	Guide-Slot
42	98-3252	2	Valve-Check (W/Poppet)
44	106-8760	1	Charge Relief Valve Kit
49	114-8155	1	Trunnion Seal Kit
56	106-8762	1	Plug-HSH
66	106-8763	1	Plug-HSH
99	105-6184	1	Seal Overhaul Kit ●

● Not illustrated

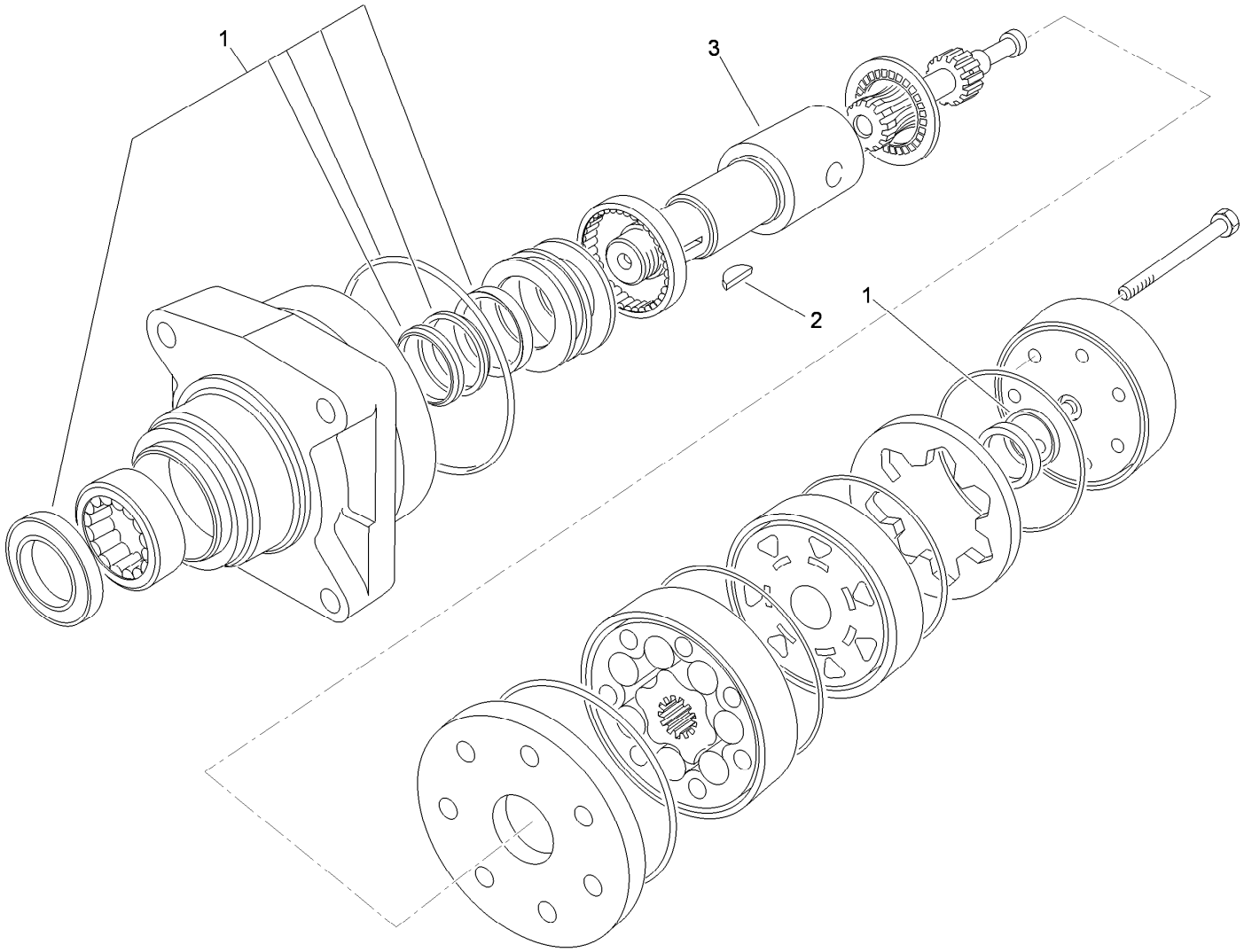

Hydraulic Motor Assembly No. 104-8470

Ref.	*Part Number*	*Qty.*	*Description*
1	115-4061	1	Seal Kit
2	3257-42	1	Key-Woodruff
3	99-3090	1	Shaft-Coupling

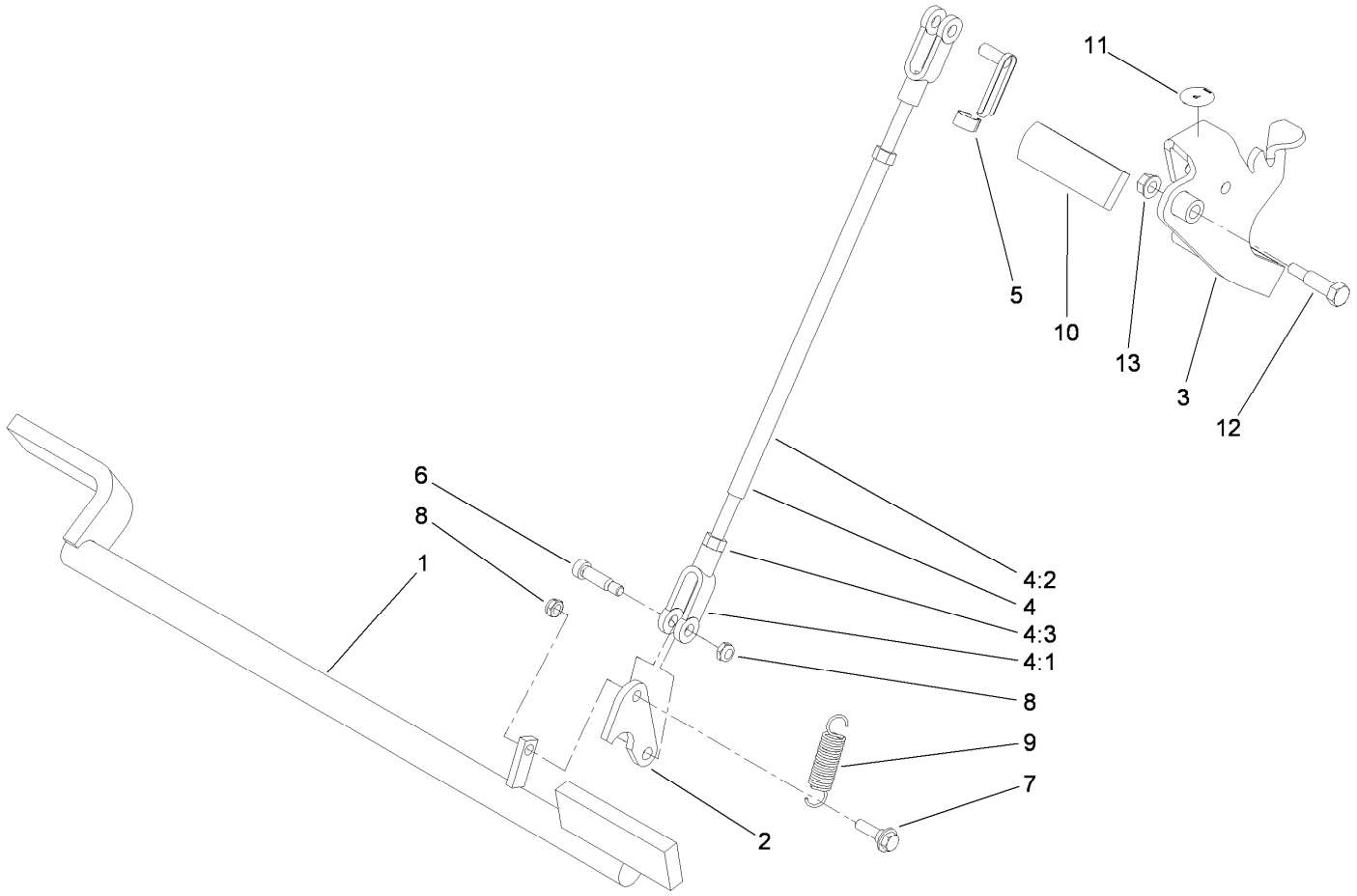

Parking Brake Assembly

Ref.	Part Number	Qty.	Description
1	114-2972-03	1	Bar-Brake
2	114-2975	1	Link-Mounting
3	117-6421-03	1	Handle-Brake
4	103-4335	1	Brake Rod ASM
4:1	1-633131	2	Yoke-Linkage, Brake
4:2	103-3907	1	Linkage-Handle, Brake
4:3	3219-3	2	Nut-Hex
5	103-2399	1	Pin-Spring, Clevis

Ref.	Part Number	Qty.	Description
6	114-8629	1	Bolt-Shldr
7	27-7211	1	Screw-Shoulder
8	3296-47	2	Nut-Lock,NI
9	67-1450	1	Spring-Idler
10	62-9130	1	Grip-Handle
11	107-8495	1	Decal-Brake, Parking
12	7-0030	1	Screw-Shoulder, HH
13	32128-20	1	Nut-HF

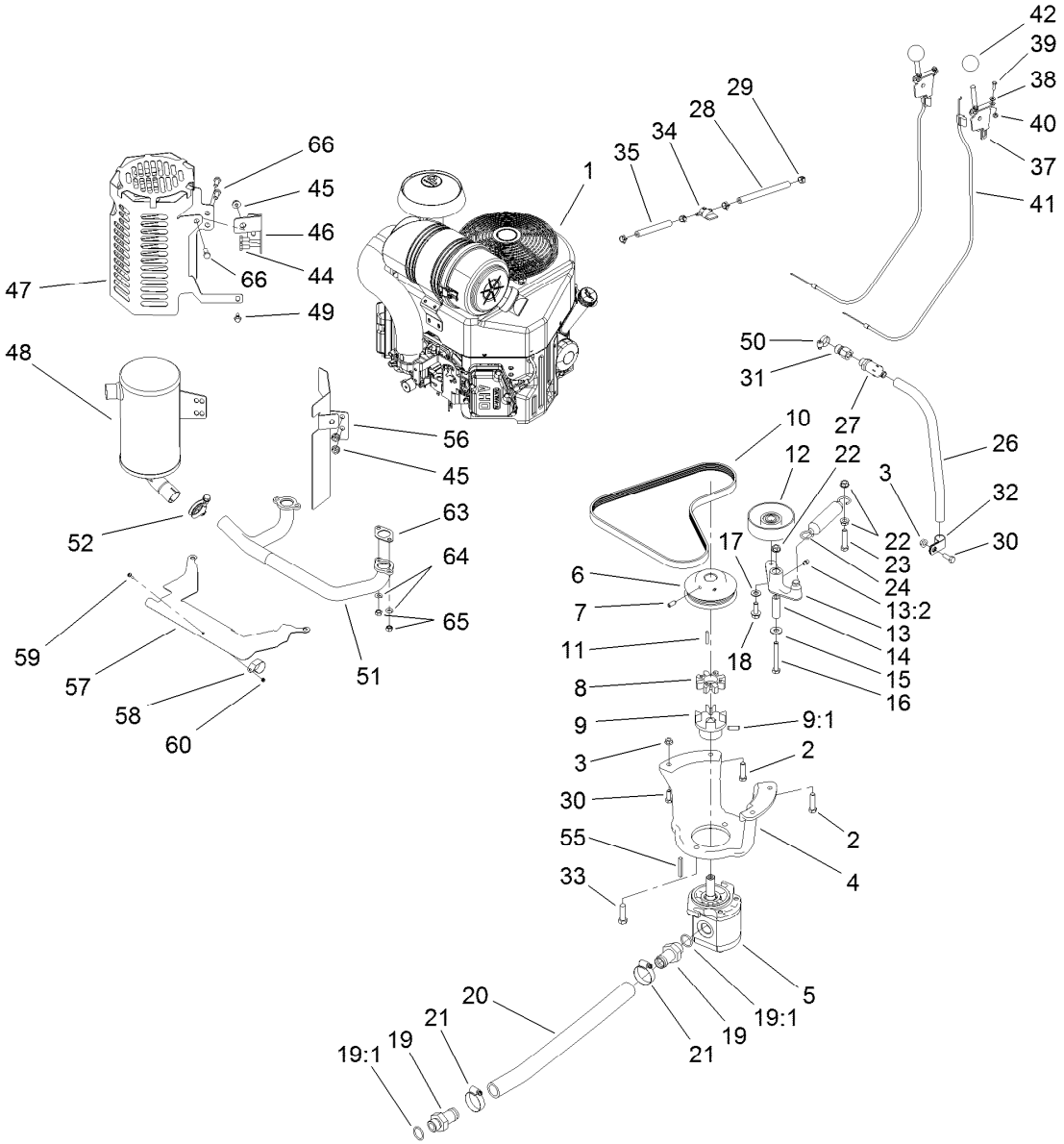

Engine Assembly

Ref.	Part Number	Qty.	Description
1	117-6305	1	Engine-Kawasaki, Fx730V
2	323-8	4	Screw-HH
3	32128-20	3	Nut-HF
4	115-1480-03	1	Mount-Pump
5	117-6307	1	Gear Pump ASM
6	114-8559-03	1	Pulley-Engine
7	3246-6	2	Screw-Set, HSH
8	93-8827	1	Coupler-Spider
9	114-2933	1	Coupler-Flex
9:1	100-7594	1	Screw-Set
10	114-2991	1	Belt-V
11	608006	1	Key-Square
12	95-8802	1	Pulley-Idler
13	117-6323	1	Idler Arm ASM
13:2	302-5	1	Fitting-Grease
14	114-2916	1	Bushing-Idler
15	3256-4	1	Washer-Flat
16	323-13	1	Screw-HH
17	3256-24	1	Washer-Plain
18	3234-11	1	Screw-HHF
19	99-3017	2	Fitting

Ref.	Part Number	Qty.	Description
19:1	237-81	1	O-Ring
20	114-2917	1	Hose-Suction
21	2412-111	2	Clamp-Hose, W/Liner
22	3290-357	3	Nut-HSF
23	323-9	1	Screw-HH
24	66-4270	1	Spring-Extension
26	106-5709	1	Hose-Vent
27	92-6877	1	Valve-Drain, Oil
28	109-0306	1	Hose-Fuel
29	2412-98	4	Clamp-Hose
30	322-4	3	Screw-HH
31	103-1966	1	Adapter-STR
32	2412-81	1	Clamp-R
33	324-6	2	Screw-HH
34	1-603770	1	Valve-Fuel
35	109-0295	1	Hose-Fuel
37	108-9730	2	Lever-Control
38	3256-21	4	Washer-Flat
39	3290-134	4	Screw
40	3296-2	4	Nut-Lock, NI
41	115-1211	2	Cable-Control

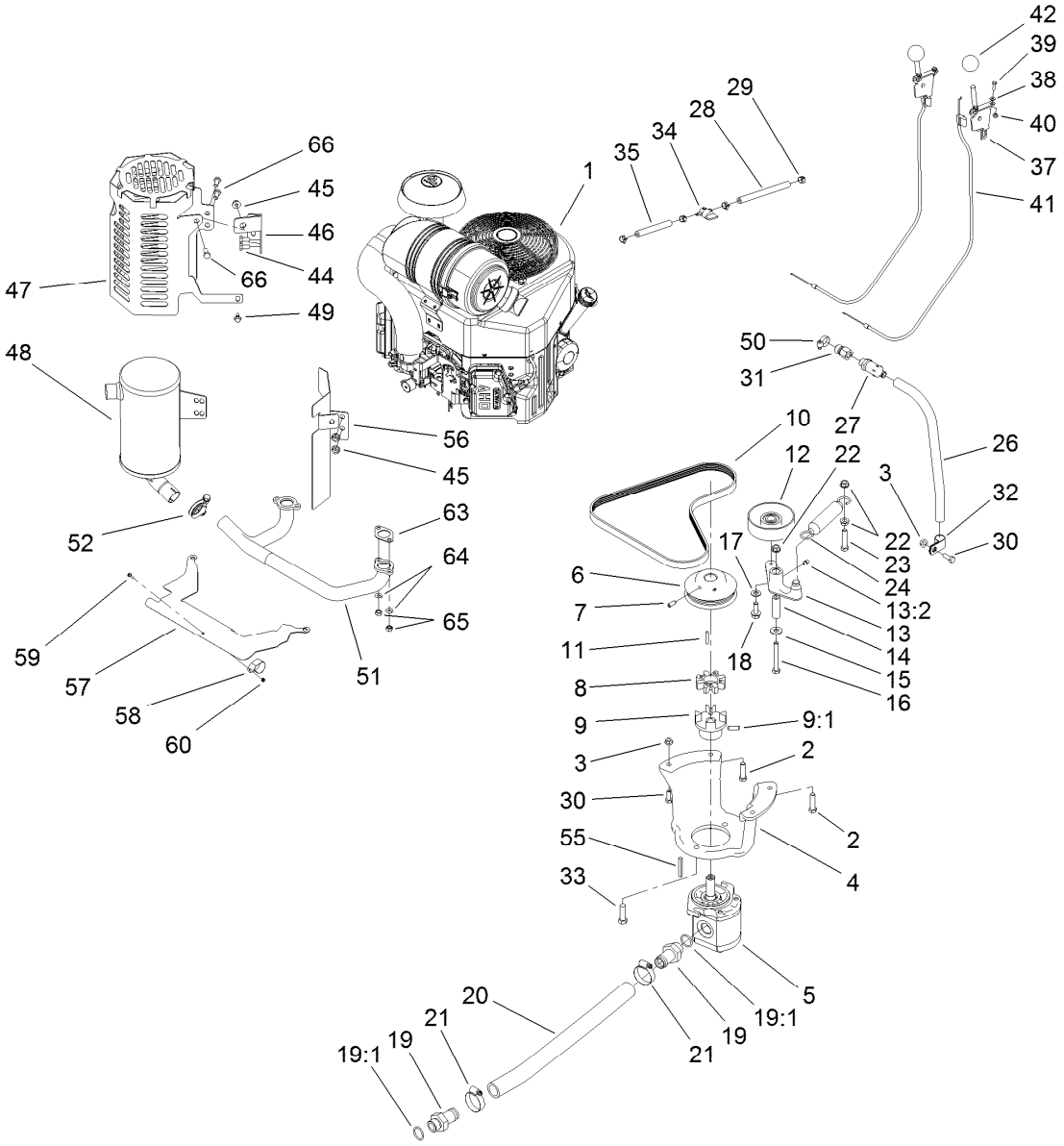

Engine Assembly (continued)

Ref.	Part Number	Qty.	Description
42	233-42	2	Knob
44	33114-016	2	Screw-HH
45	112-2844	3	Nut-HF
46	115-9233-03	1	Bracket-Mount, Muffler
47	115-9234-03	1	Shield-Muffler
48	117-6319	1	Muffler
49	33103-016	1	Screw-HHF
50	2412-36	1	Clamp-Hose
51	117-6318	1	Manifold
52	2112-11	1	Clamp-Muffler

Ref.	Part Number	Qty.	Description
55	27-8590	1	Key-Square
56	117-6337	1	Bracket-Shield, Heat
57	115-9227	1	Plate-Shield, Heat
58	115-6488	1	Clamp
59	115-6494	1	Screw-Pan
60	115-6495	1	Nut-Hex
63	1-653313	2	Gasket-Exhaust
64	115-6496	4	Washer-Spring
65	115-6611	4	Nut-Hex
66	33114-020	3	Screw-HH

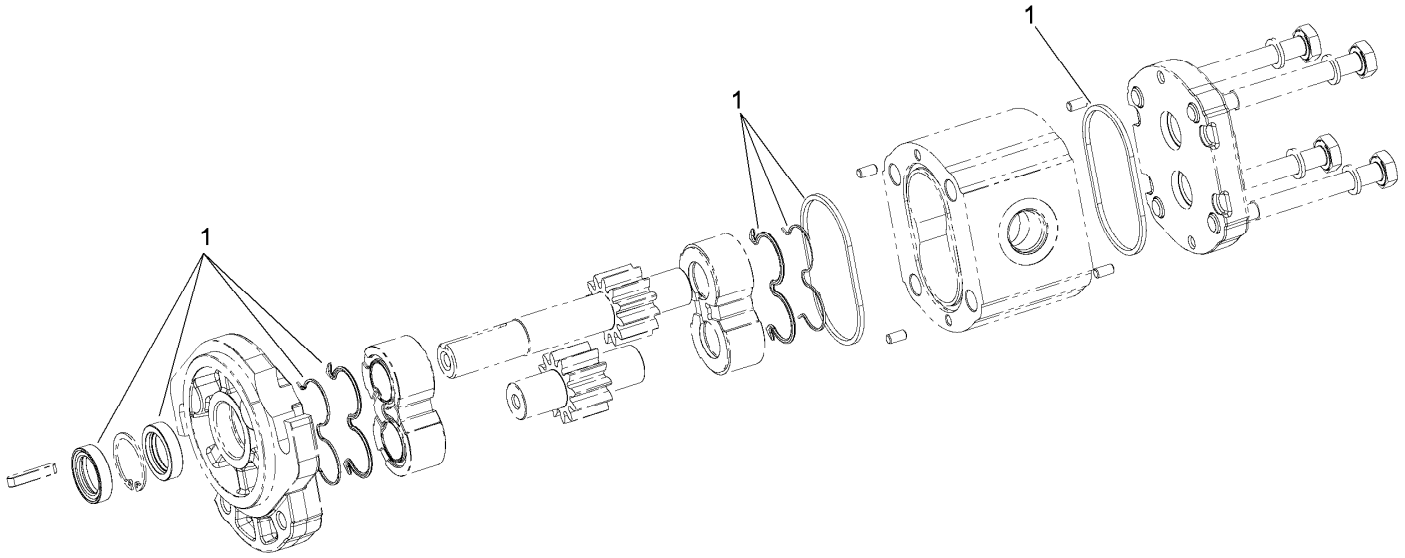

Gear Pump Assembly No. 117-6307

Ref.	*Part Number*	*Qty.*	*Description*
1	115-1265	1	Seal Kit

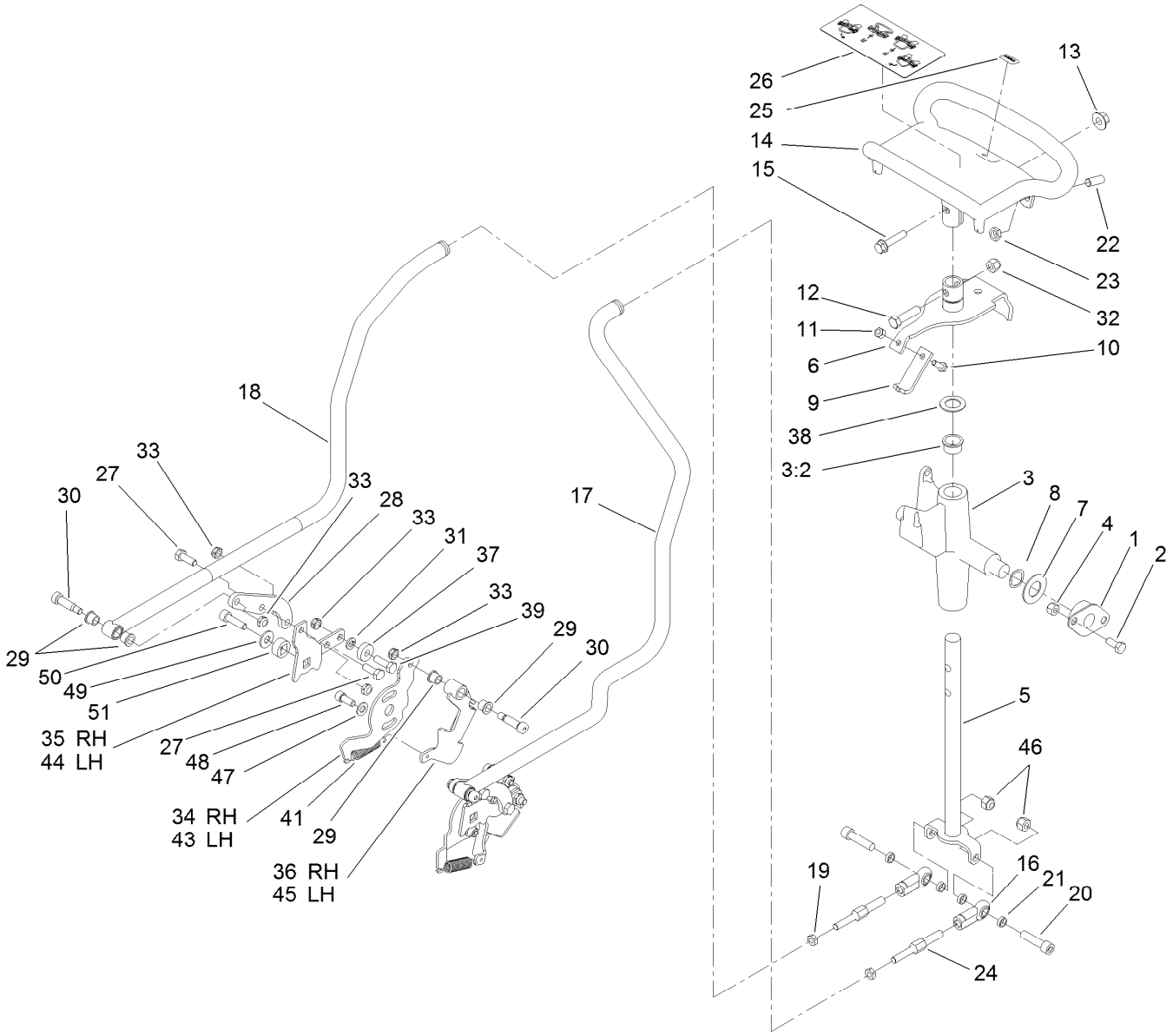

Control Assembly

Ref.	Part Number	Qty.	Description
1	68-2970	2	Bushing
2	322-3	4	Screw-HH
3	106-5737	1	Control Support ASM
3:2	256-252	2	Bearing-Flange
4	3296-29	4	Nut-Lock, NI
5	117-6335	1	Rod-Drive
6	112-2783	1	Lever-Pivot
7	3256-39	2	Washer-Flat
8	95-3703	2	Washer-Spring, Wave
9	115-1204	1	Plate-Neutral
10	321-4	1	Screw-HH
11	3296-42	1	Nut-Lock, NI
12	323-8	1	Screw-HH
13	32128-43	1	Nut-Flange
14	106-7614-03	1	Handle-Control
15	3234-18	1	Screw-HHF
16	103-1167	2	Joint-Ball End, LH
17	114-2901	1	Rod-Control, LH
18	114-2902	1	Rod-Control, RH
19	3220-2	2	Nut-Jam
20	3274-2	2	Screw-HSH

Ref.	Part Number	Qty.	Description
21	108-0634	4	Spacer-Plate, Retaining
22	3247-6	2	Screw-Set
23	3218-3	2	Nut-Jam
24	117-6334	2	Link-Control, Adjustment
25	98-1459	1	Decal
26	115-4020	1	Decal-Traction
27	322-4	4	Screw-HH
28	115-1290	2	Plate-Adapter, Control, RH
29	256-116	8	Bushing-Flange
30	114-8629	4	Bolt-Shldr
31	3253-4	2	Washer-Lock
32	3296-39	1	Nut-Lock, NI
33	3296-47	10	Nut-Lock,NI
34	115-6535	1	Plate-Base, RH
35	115-6536	1	Plate-Arm, Return
36	115-6636	1	Pivot-RH
37	251-259	2	Bearing-Ball
38	257-8	1	Washer-Thrust
39	322-5	2	Screw-HH
41	63-2870	2	Spring-Extension
43	115-6549	1	Plate-Base, LH

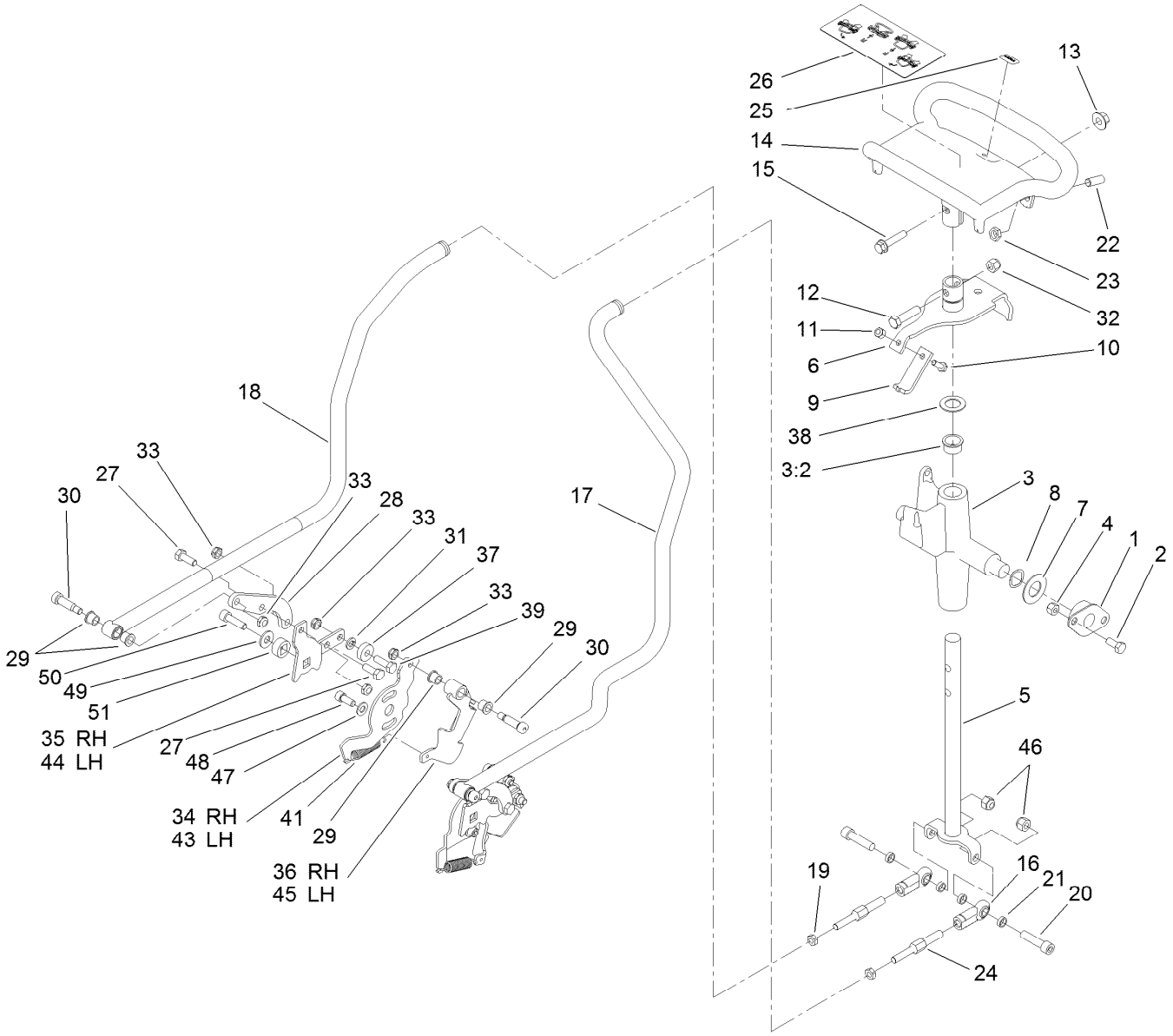

Control Assembly (continued)

Ref.	Part Number	Qty.	Description
44	115-6628	1	Plate-Arm, Return, LH
45	115-6637	1	Pivot-LH
46	3296-39	2	Nut-Lock, NI
47	3256-23	2	Washer-Plain
48	3273-14	2	Screw-HSH
49	3256-3	2	Washer-Flat
50	94-3559	2	Screw-HSH
51	117-6429	2	Lock-Trunion

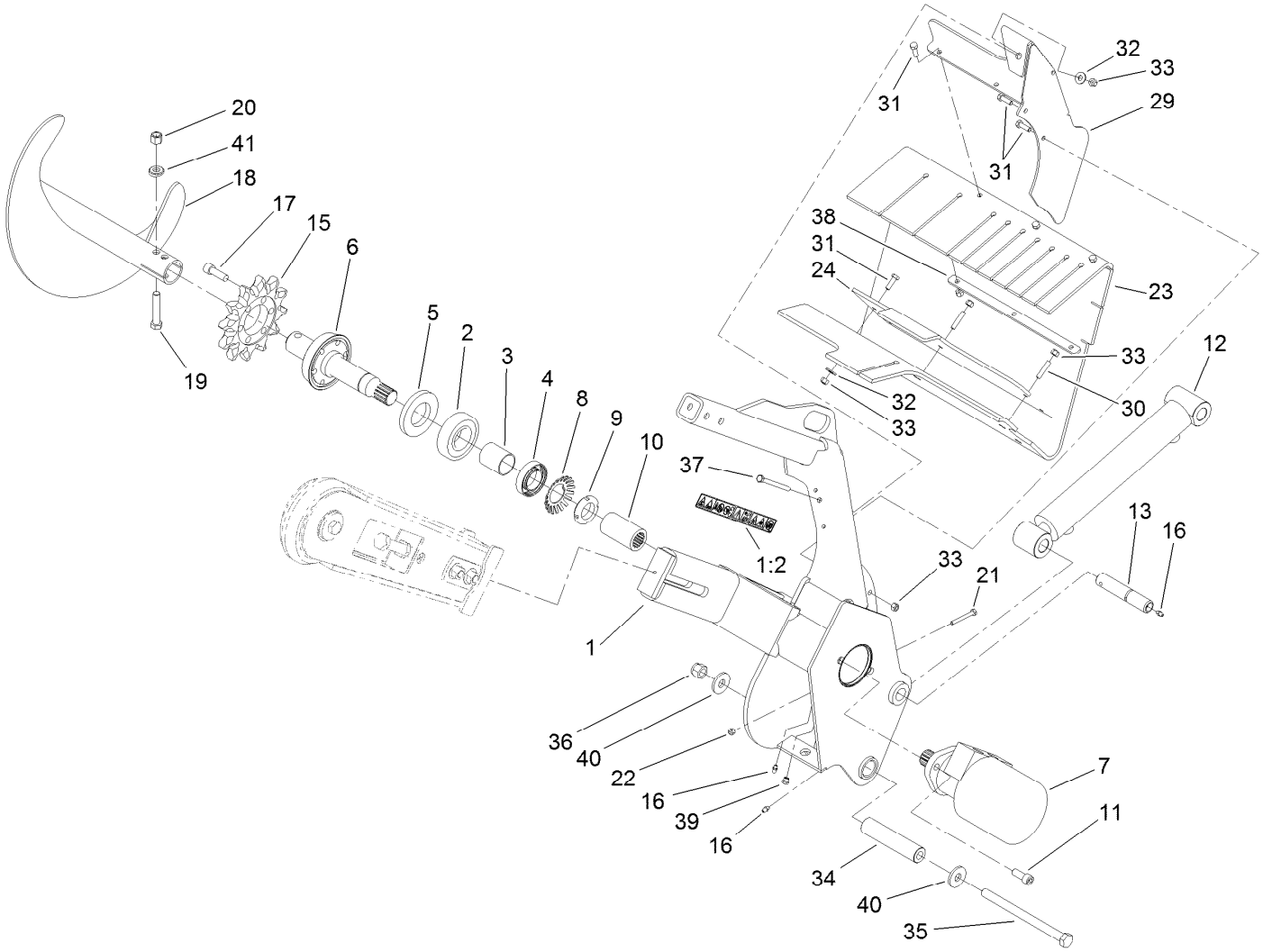

Trencher Assembly

Ref.	Part Number	Qty.	Description
1	117-6423	1	Trencher Head ASM
1:2	99-9952	2	Decal-Danger
2	106-8871	1	Bearing-Ball
3	112-4979	1	Spacer
4	111199	1	Bearing-Ball
5	114-2955	1	Seal-Grease
6	117-6308	1	Shaft-Trencher
7	117-6306	1	Hydraulic Motor ASM
8	114-2956	1	Lockwasher-Bearing
9	88-1450	1	Locknut-Bearing
10	117-6315	1	Collar-Splined
11	3274-89	2	Screw-HSH
12	112-2602	1	HYD Cylinder ASM
13	120-7352	1	Pin-Pivot
15	104-1964	1	Sprocket-Trencher
16	302-5	3	Fitting-Grease
17	3274-4	6	Screw-HSH
18	117-8852-03	1	Auger-Trencher
19	325-13	1	Screw-HH

Ref.	Part Number	Qty.	Description
20	3296-23	1	Nut-Lock, NI
21	321-18	1	Screw-HH
22	3296-42	1	Nut-Lock, NI
23	117-6317	1	Shield-Dirt
24	117-6316-03	1	Clamp-Bar
29	115-1279-03	1	Bracket-Shield
30	115-4049	2	Screw-HSH
31	322-5	8	Screw-HH
32	3256-3	4	Washer-Flat
33	3296-29	11	Nut-Lock, NI
34	114-8573	1	Spacer-Pivot
35	117-6327	1	Bolt-HH
36	3296-53	1	Nut-Lock, NI
37	322-23	1	Screw-HH
38	115-4001-03	1	Plate-Strap, Shield
39	302-34	1	Fitting-Lube
40	104-9216	2	Washer-Hardened
41	117-3479	2	Washer-Saddle

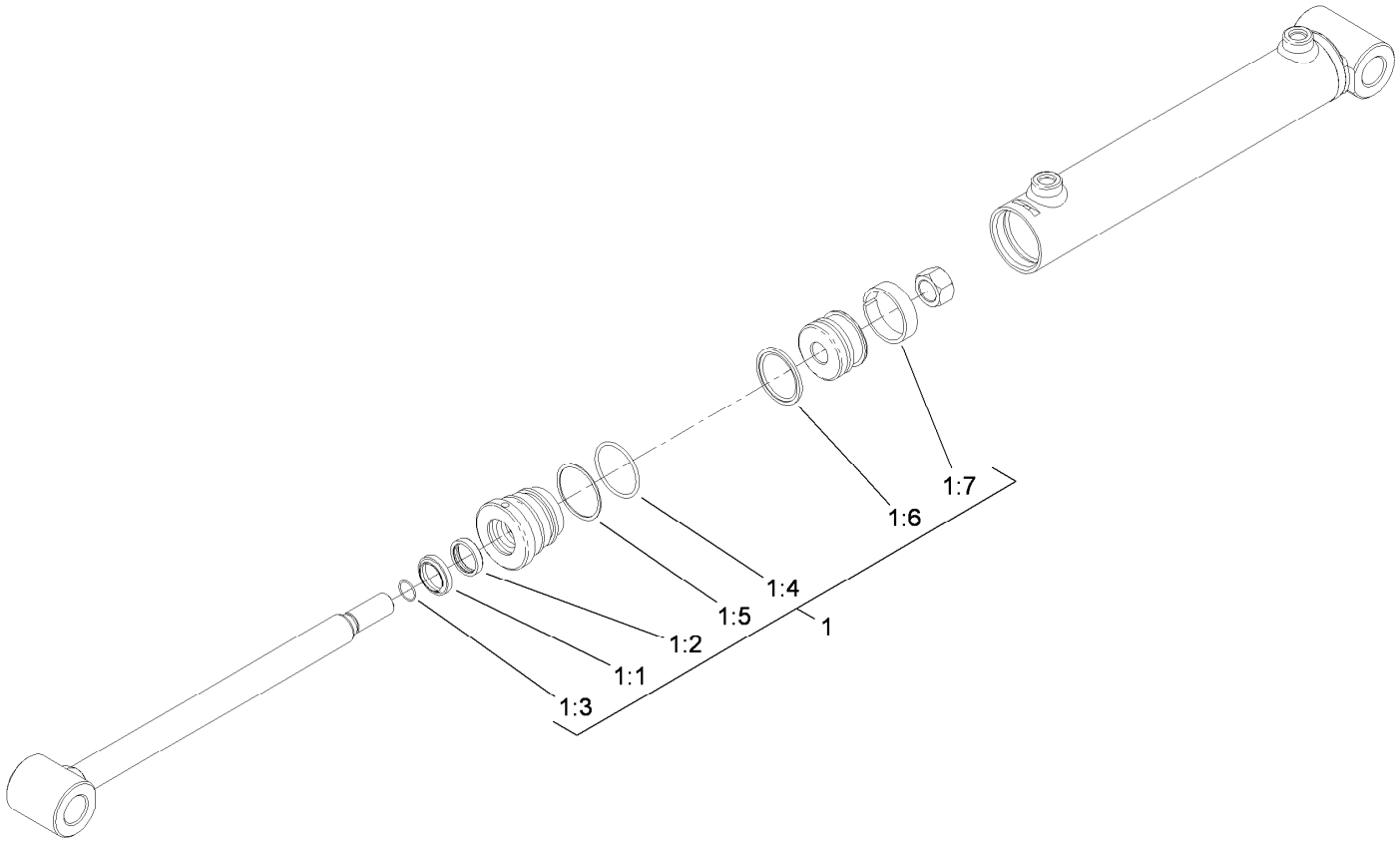

Hydraulic Cylinder Assembly No. 112-2602

Ref.	*Part Number*	*Qty.*	*Description*
1	107-1183	1	Seal Kit
1:1		1	Wiper ●
1:2		1	U-Cup ●
1:3		1	Ring-Retaining ●
1:4		1	Ring-Retaining ●
1:5		1	Back-Up Ring ●
1:6		1	Capseal ●
1:7		1	Wear Ring ●

● Not serviced separately

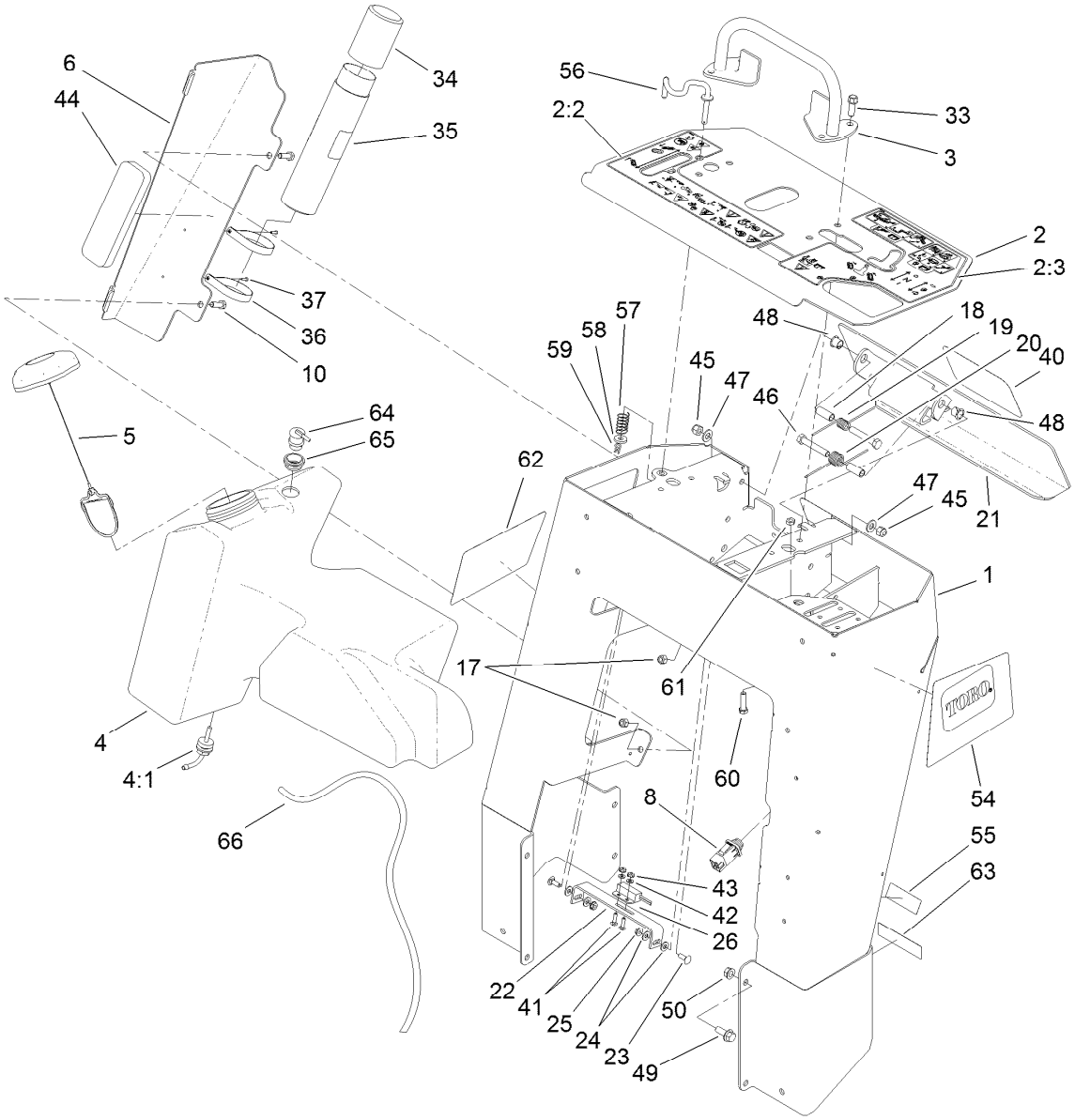

Control Tower Assembly

Ref.	Part Number	Qty.	Description
1	117-6419-01	1	Tower
2	117-6389	1	Panel-Control
2:2	115-1231	1	Decal-Console, RH
2:3	115-1230	1	Decal-Console, LH
3	106-7715	1	Bar-Reference
4	117-6293	1	Tank-Fuel
4:1	103-2605	1	Fitting-Fuel, Bulkhead
5	120-5461	1	Cap-Fuel, Ratcheting
6	114-3065-01	1	Bracket-Cover, Tank
8	100-1268	1	Switch-Plunger
10	322-5	2	Screw-HH
17	3296-29	2	Nut-Lock, NI
18	114-1337	2	Spacer-Spring
19	98-8425	1	Spring-Torsion, LH
20	98-8424	1	Spring-Torsion, RH
21	114-3012-03	1	Plate-Reverse
22	100-1263	1	Plate-Switch
23	3229-1	2	Screw-CARR
24	3256-22	4	Washer-Flat
25	32149-2	2	Nut-Keps
26	100-1270	1	Switch-Proximity

Ref.	Part Number	Qty.	Description
33	95-1726	4	Screw-Taptite
34	104-7048	1	Cap-Housing
35	104-7050	1	Tube-Manual
36	2412-120	2	Clamp-R
37	3269-17	2	Rivet-Pop
40	105-1217	1	Decal
41	3229-20	2	Screw-CARR
42	3256-51	2	Washer-Flat
43	32149-7	2	Nut-Keps
44	107-7507	1	Pad-Foam
45	3296-39	2	Nut-Lock, NI
46	323-11	2	Screw-HH
47	3256-24	2	Washer-Plain
48	256-257	2	Bushing-Nyliner
49	3234-11	8	Screw-HHF
50	32128-40	8	Nut-Flange
54	117-6415	1	Decal-Side, LH
55	117-6414	1	Decal-Info,
56	114-8727	1	Rod-Interlock
57	85-6750	1	Spring-Control
58	88-7200	1	Washer-Flat

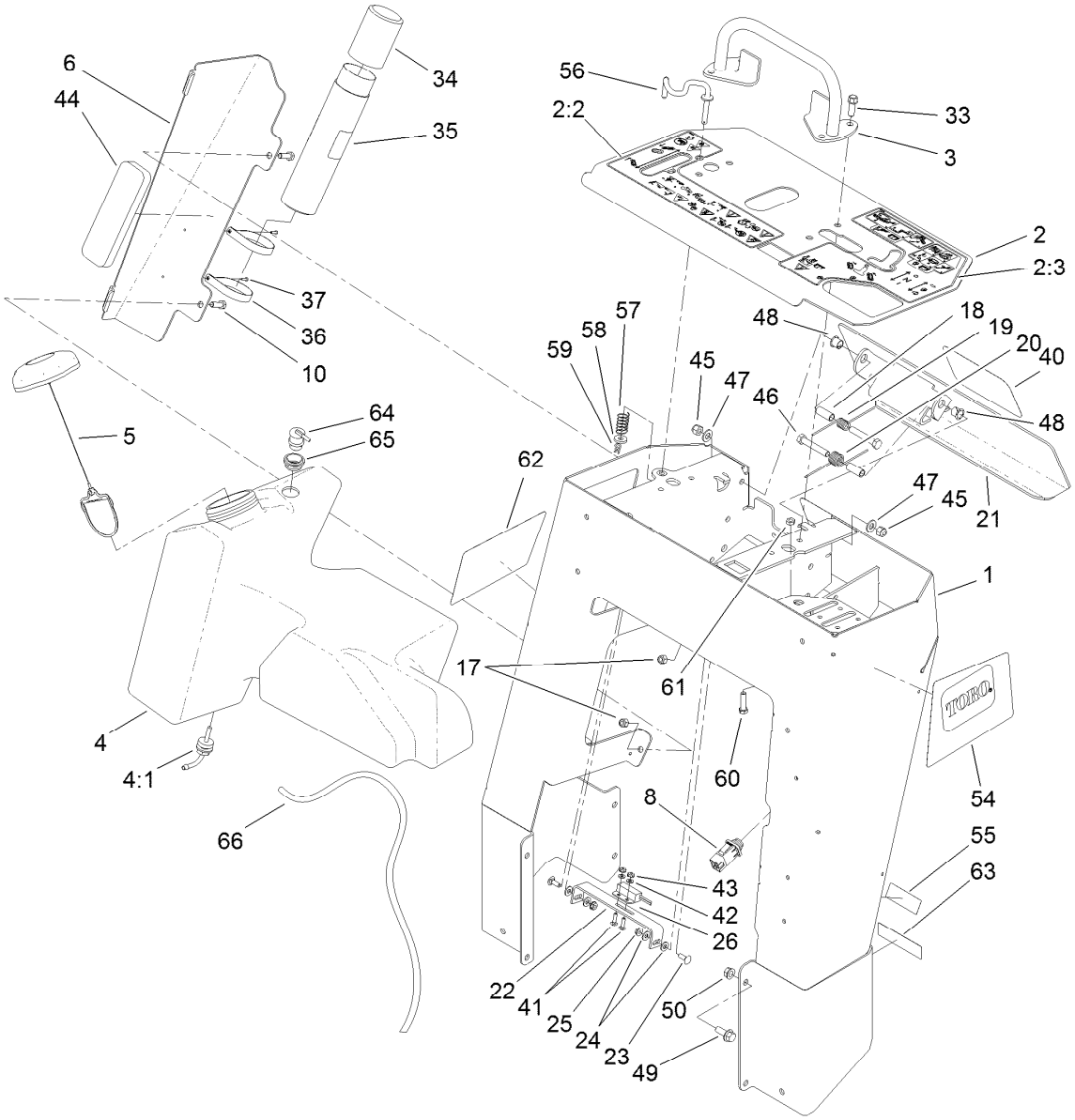

Control Tower Assembly (continued)

Ref.	Part Number	Qty.	Description
59	3290-307	1	Pin-Cotter
60	3210-7	1	Screw-HH
61	3220-2	2	Nut-Jam
62	117-6416	1	Decal-Side, RH

Ref.	Part Number	Qty.	Description
63	117-2718	1	Decal-Arrester, Spark
64	114-0285	1	Valve-Rollover
65	114-0284	1	Grommet
66	117-6396	1	Hose-Vent, Tank

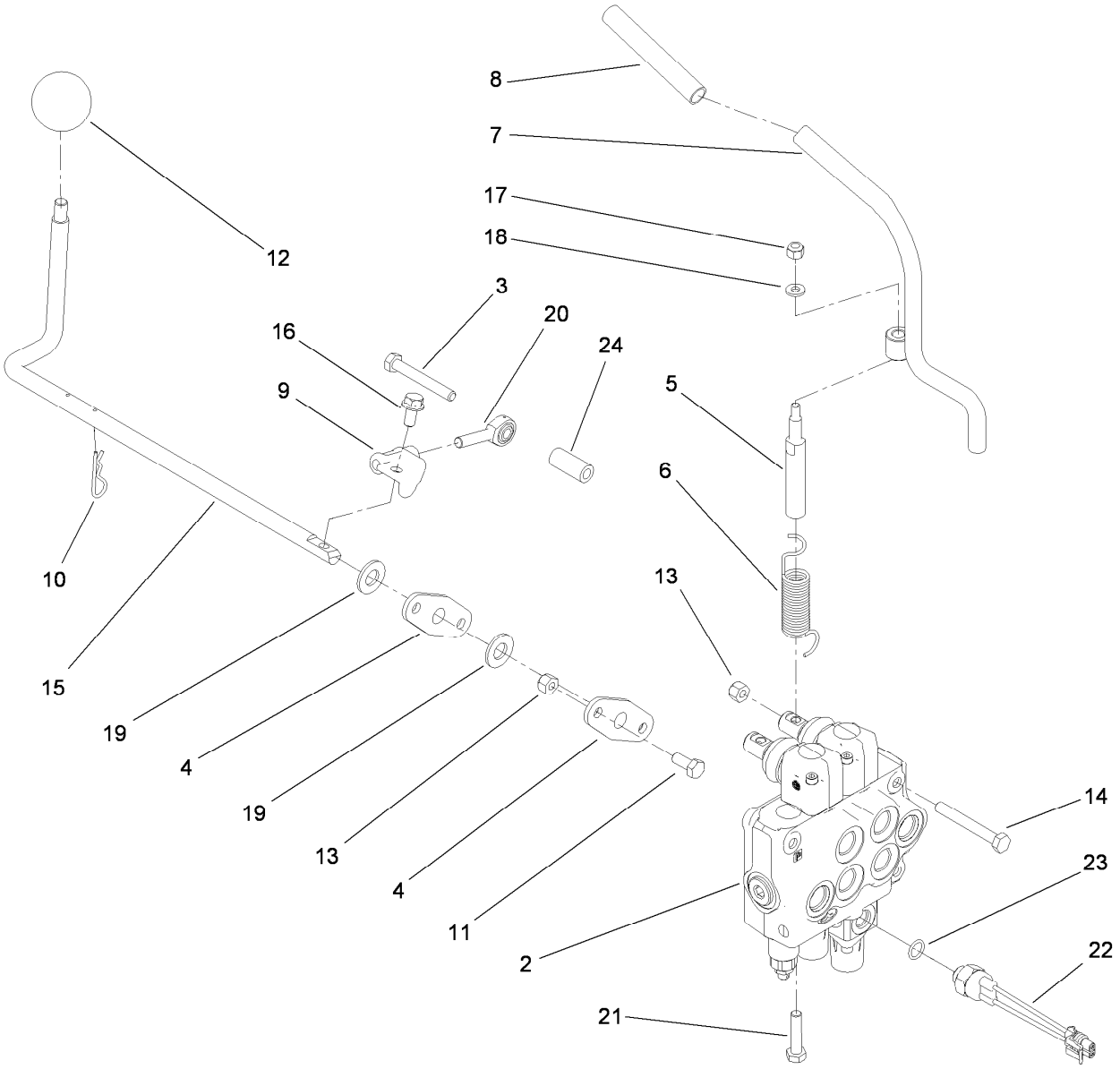

Hydraulic Control Assembly

Ref.	Part Number	Qty.	Description
2	115-4062	1	HYD Valve ASM
3	33114-060	1	Screw-HH
4	20-1620	2	Bearing-Wheel, Friction
5	104-2827	1	Spacer-Hiflo
6	112-2738	1	Spring-Torsion
7	112-2739	1	Lever-Auxiliary
8	112-2605	1	Grip-Rubber
9	112-7210	1	Bracket-Control
10	3290-467	2	Pin-Hair
11	322-3	4	Screw-HH
12	233-21	1	Knob
13	3296-29	7	Nut-Lock, NI

Ref.	Part Number	Qty.	Description
14	322-12	3	Screw-HH
15	114-8598	1	Rod-Lever, Cylinder
16	3234-14	1	Screw-HHF
17	3296-42	1	Nut-Lock, NI
18	3256-16	1	Washer-Flat
19	3256-26	2	Washer-Flat
20	115-1273	1	Bearing-Rod End
21	48-7740	1	Screw
22	72-4310	1	Switch-Ball
23	237-42	1	O-Ring
24	103-0384	1	Spacer

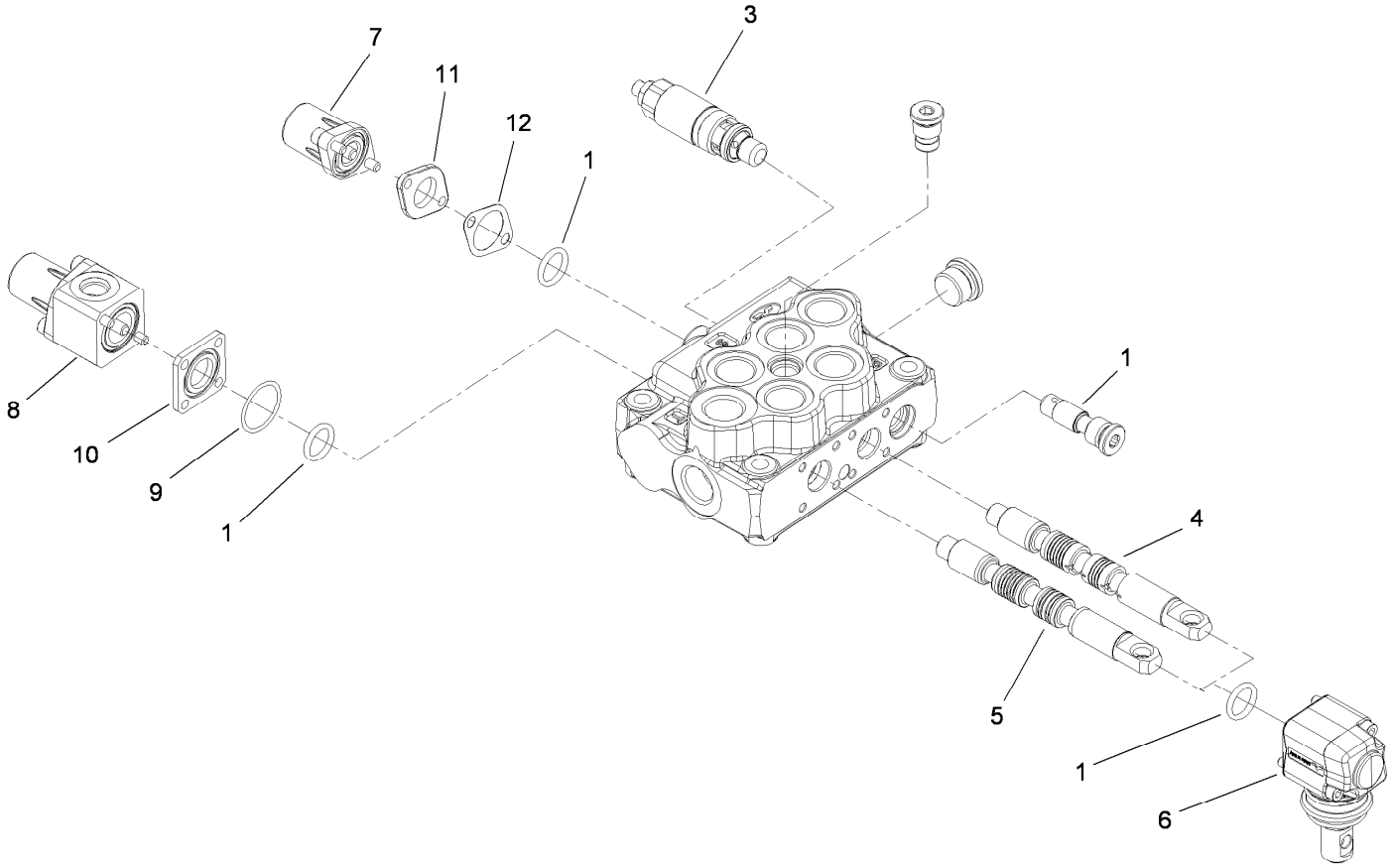

2-Spool Valve Assembly No. 115-4062

Ref.	*Part Number*	*Qty.*	*Description*
1	106-7719	4	Seal-Valve
3	100-8805	1	Valve-Relief
4	115-4084	1	Spool-Valve
5	106-7572	1	Spool
6	100-7229	2	Lever Kit
7	115-4092	1	Spring Return Kit
8	115-4093	1	Switch Spring Return Kit
9	115-4097	1	Seal-Return
10	115-4094	1	Spacer-Square
11	115-4089	1	Spacer-Spring Return
12	115-4088	1	Gasket-Return

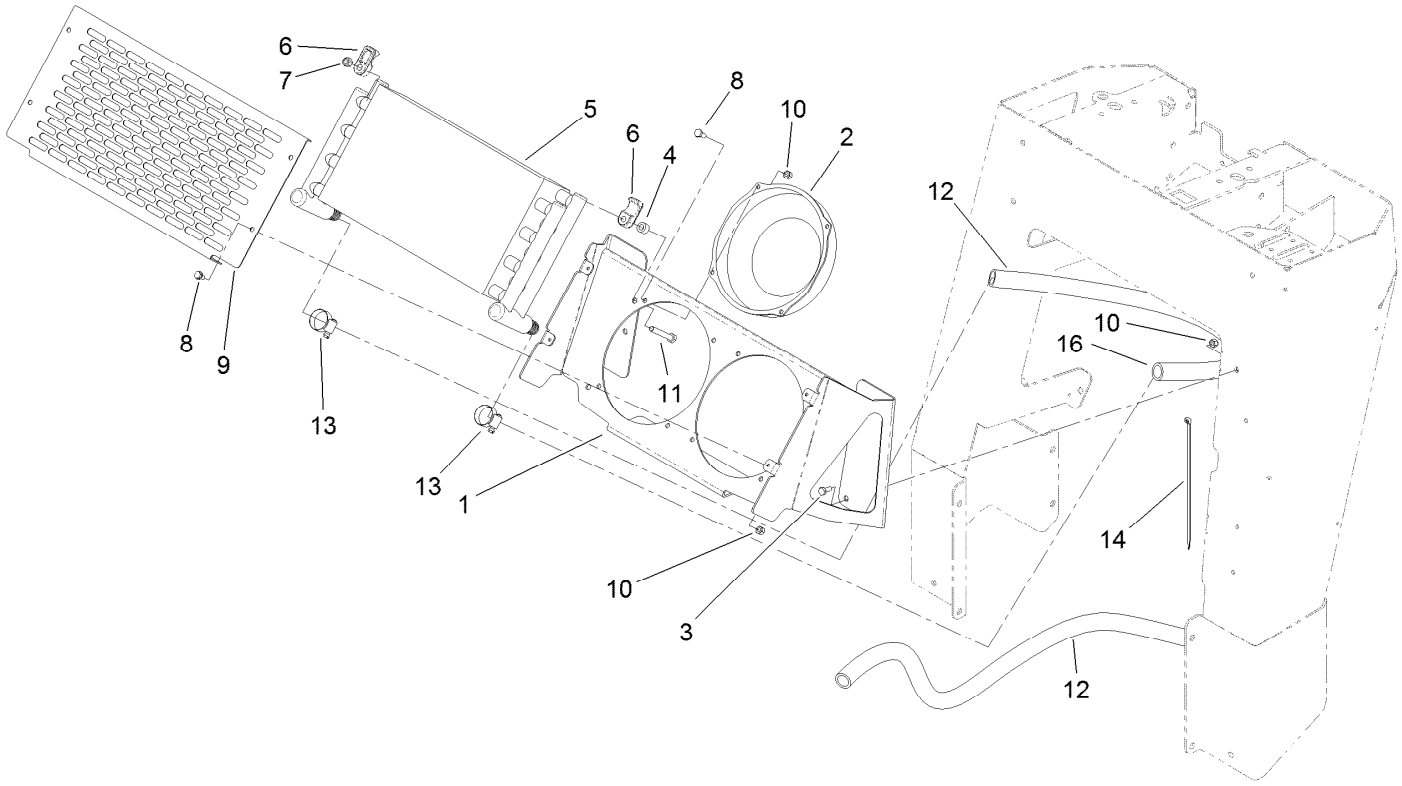

Oil Cooler Assembly

Ref.	Part Number	Qty.	Description
1	115-9240-01	1	Mount-Cooler
2	104-2809	2	Fan
3	321-3	12	Screw-HH
4	98-4695	4	Spacer
5	117-6320	1	Cooler-Oil
6	105-3943	8	Clamp-Cooler, Oil
7	3296-29	4	Nut-Lock, NI
8	32144-4	4	Screw-HWH
9	119-4633-01	1	Cover-Cooler
10	3296-42	16	Nut-Lock, NI
11	322-11	4	Screw-HH
12	115-1207	1	Hose-Return
13	2412-129	2	Clamp-Hose
14	3334-945	1	Tie-Cable
16	117-3966	1	Hose-Cooler

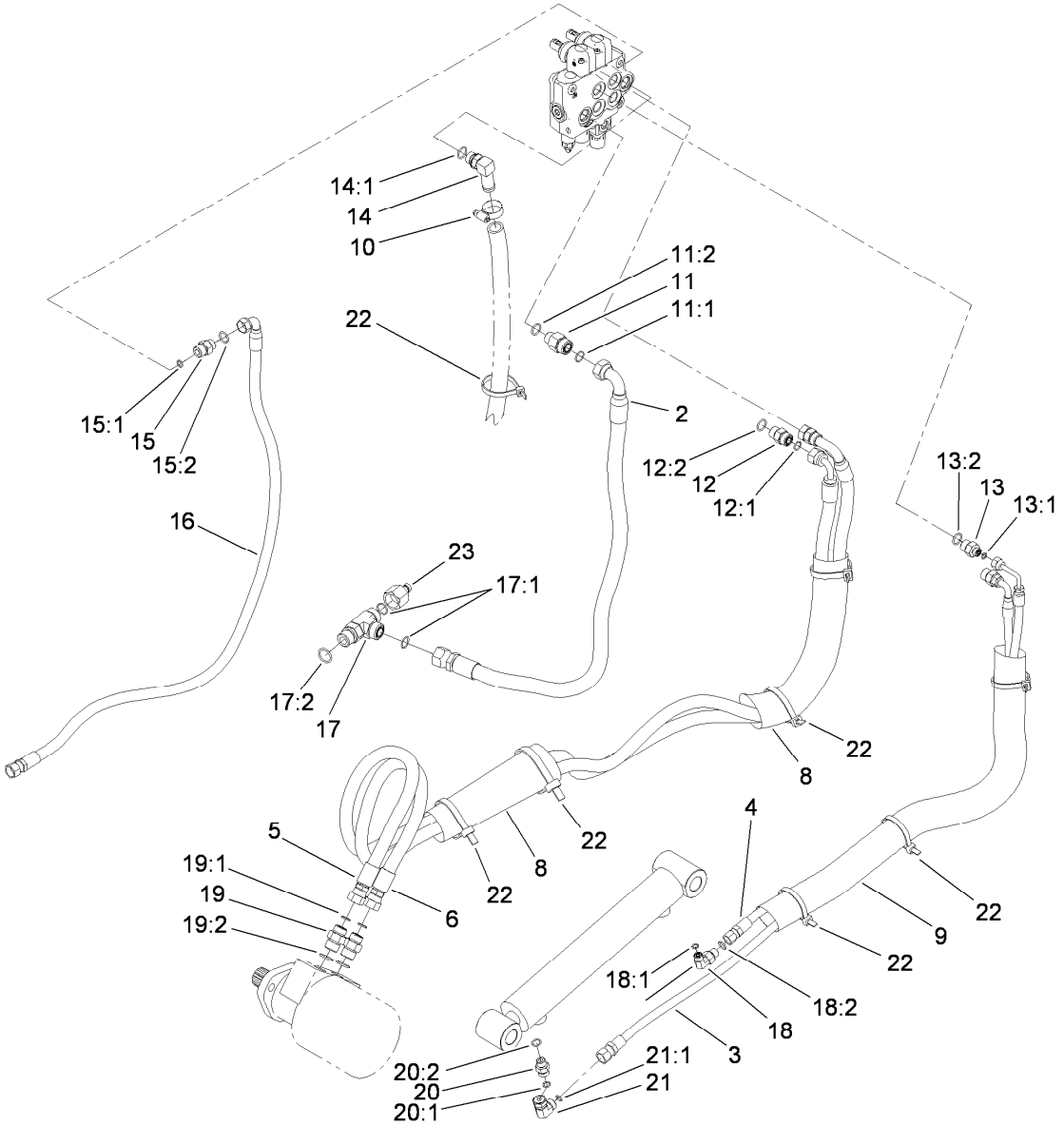

Hydraulic Hose Routing Assembly

Ref.	Part Number	Qty.	Description
2	114-3043	1	Hose-HYD
3	114-3044	1	Hose-HYD
4	114-3045	1	Hose-HYD
5	114-3046	1	Hose-HYD
6	114-3085	1	Hose-HYD
8	99-5648	2	Sleeve-Protective
9	115-4064	1	Sleeve-Protective
10	2412-129	2	Clamp-Hose
11	340-155	1	Fitting-Straight
11:1	237-79	1	O-Ring
11:2	237-151	1	O-Ring
12	340-4	2	Fitting-Straight
12:1	237-30	1	O-Ring
12:2	237-79	1	O-Ring
13	340-133	2	Fitting-STR
13:1	237-79	1	O-Ring
13:2	237-21	1	O-Ring
14	353-954	1	Fitting-Elbow, 90
14:1	237-79	1	O-Ring
15	340-3	1	Fitting-Straight

Ref.	Part Number	Qty.	Description
15:1	237-22	1	O-Ring
15:2	237-79	1	O-Ring
16	117-4038	1	Hose-HYD
17	340-22	1	Fitting-Tee
17:1	237-65	2	O-Ring
17:2	237-80	1	O-Ring
18	340-82	1	Fitting-Elbow, 90 DEG
18:1	237-42	1	O-Ring
18:2	237-21	1	O-Ring
19	340-6	2	Fitting-Straight
19:1	237-30	1	O-Ring
19:2	237-80	1	O-Ring
20	115-4081	1	Valve-Check
20:1	237-42	1	O-Ring
20:2	237-22	1	O-Ring
21	340-159	1	Elbow-90
21:1	237-22	2	O-Ring
22	3334-945	9	Tie-Cable
23	86-5860	1	Nipple

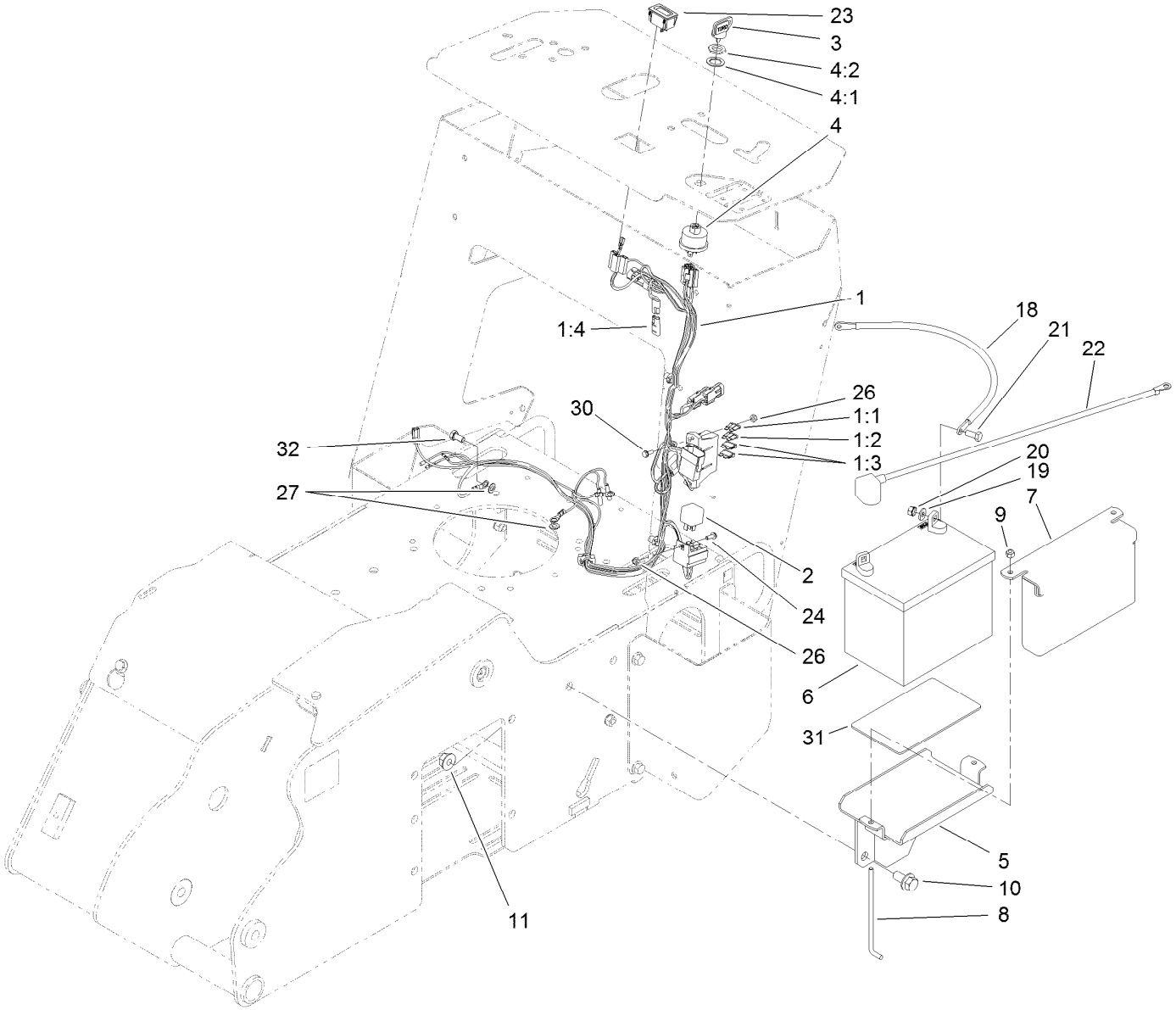

Electrical Assembly

Ref.	Part Number	Qty.	Description
1	117-6338	1	Harness-Wire
1:1	109103	1	Fuse-Blade, 30 Amp
1:2	109102	1	Fuse-Blade, 25 Amp
1:3	109101	1	Fuse-Blade, 20 Amp
1:4	116-0053	1	Cap-Plug
2	98-7249	2	Relay
3	63-8360	1	Key-Ignition
4	88-9830	1	Key Switch ASM
4:1	3254-5	1	Washer-Lock
4:2	218-461	1	Nut-HH
5	105-3150-01	1	Tray-Battery
6	104-8162	1	Battery
7	115-6621-03	1	Plate-Hold Down, Battery
8	104-8567	2	Holdown-Battery
9	3296-42	2	Nut-Lock, NI

Ref.	Part Number	Qty.	Description
10	3234-6	2	Screw-HHF
11	32128-49	2	Nut-HHF
18	106-8945	1	Cable-Battery, Positive
19	3256-2	2	Washer-Flat
20	32149-1	2	Nut-Keps
21	322-3	2	Screw-HH
22	117-6422	1	Cable-Battery, Black
23	120-2244	1	Hourmeter
24	32105-23	1	Screw
26	3296-2	2	Nut-Lock, NI
27	3255-8	1	Washer-Lock
30	32105-13	1	Screw-HWH
31	62-4300	1	Pad-Skid, Anti
32	33114-016	1	Screw-HH

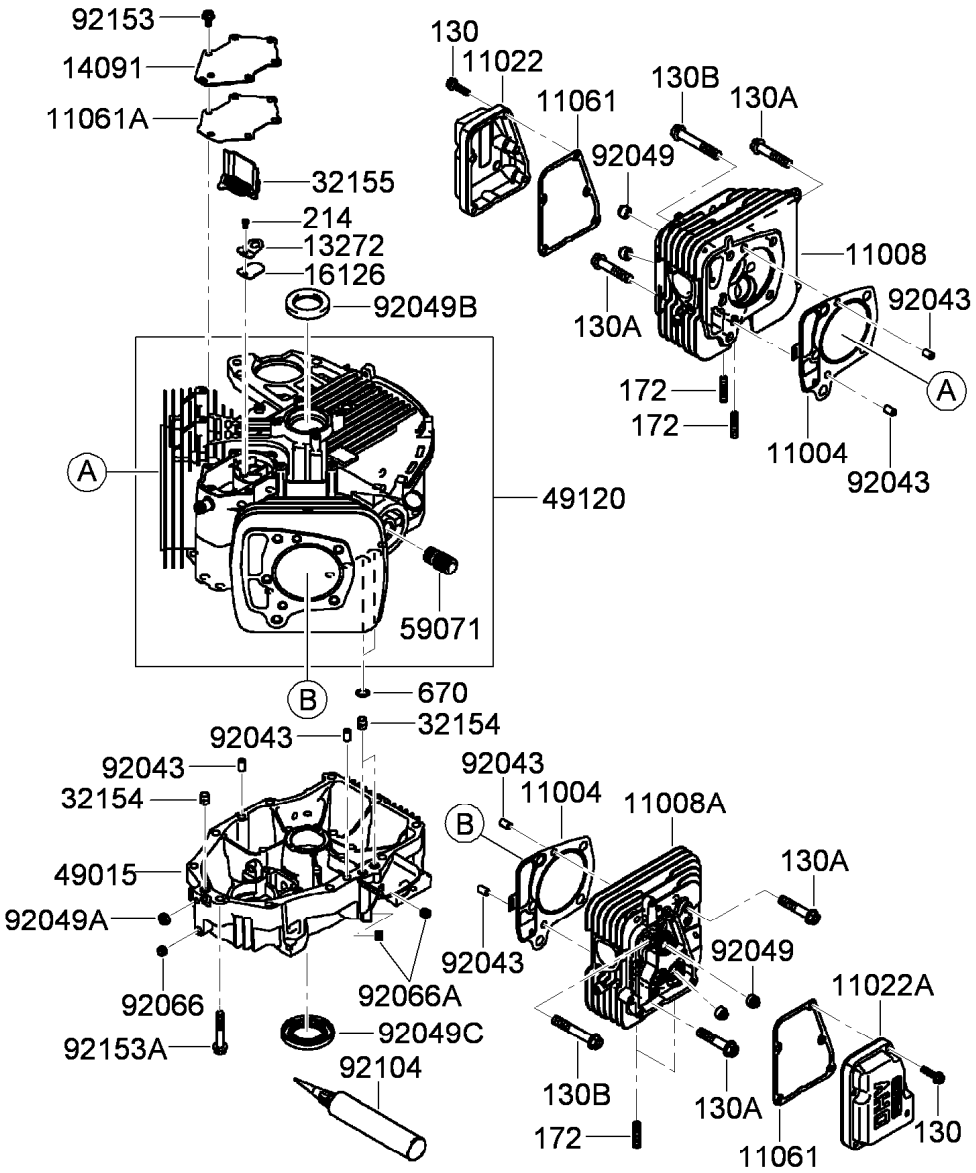

Cylinder and Crankcase Assembly

Ref.	Part Number	Qty.	Description
130	93-8548	10	Bolt-Flanged (6X25)
130A	119-5822	4	Bolt-Flanged (10X50)
130B	119-5823	6	Bolt-Flanged (10X65)
172	114-8658	4	Bolt-Stud (8X18)
214	115-6422	1	Screw-Pan (4X8)
670	95-9771	2	O-Ring (11Mm)
11004	119-5800	2	Gasket-Head
11008	119-5801	1	Head-Cylinder (No.1)
11008A	119-5802	1	Head-Cylinder (No.2)
11022	119-5803	1	Case-Rocker (No.1)
11022A	119-5804	1	Case-Rocker (No.2)
11061	119-5805	2	Gasket-Case, Rocker
11061A	119-5806	1	Gasket-Breather
13272	119-5808	1	Plate-Breather
14091	119-5809	1	Cover-Breather
16126	119-5810	1	Valve-Breather

Ref.	Part Number	Qty.	Description
32154	119-5811	3	Pipe
32155	119-5812	1	Pipe-Breather
49015	119-5813	1	Cover-Crankcase
49120	119-5814	1	Crankcase ASM
59071	95-9715	1	Joint
92043	KW10694	6	Pin
92049	114-8650	4	Seal-Oil, Rv C2 (6X11X10.2)
92049A	119-5816	1	Seal-Oil, So (8X14X5) Hs
92049B	119-5817	1	Seal-Oil, Sd (35X48X8) R Hs
92049C	119-5818	1	Seal-Oil (38X62X8) Mtclv
92066	119-5819	1	Plug
92066A	119-5820	2	Plug
92104	119-5821	1	Gasket-Liquid (Tb1217H)
92153	114-8655	6	Bolt (6X12)
92153A	114-8656	10	Bolt (8X50)

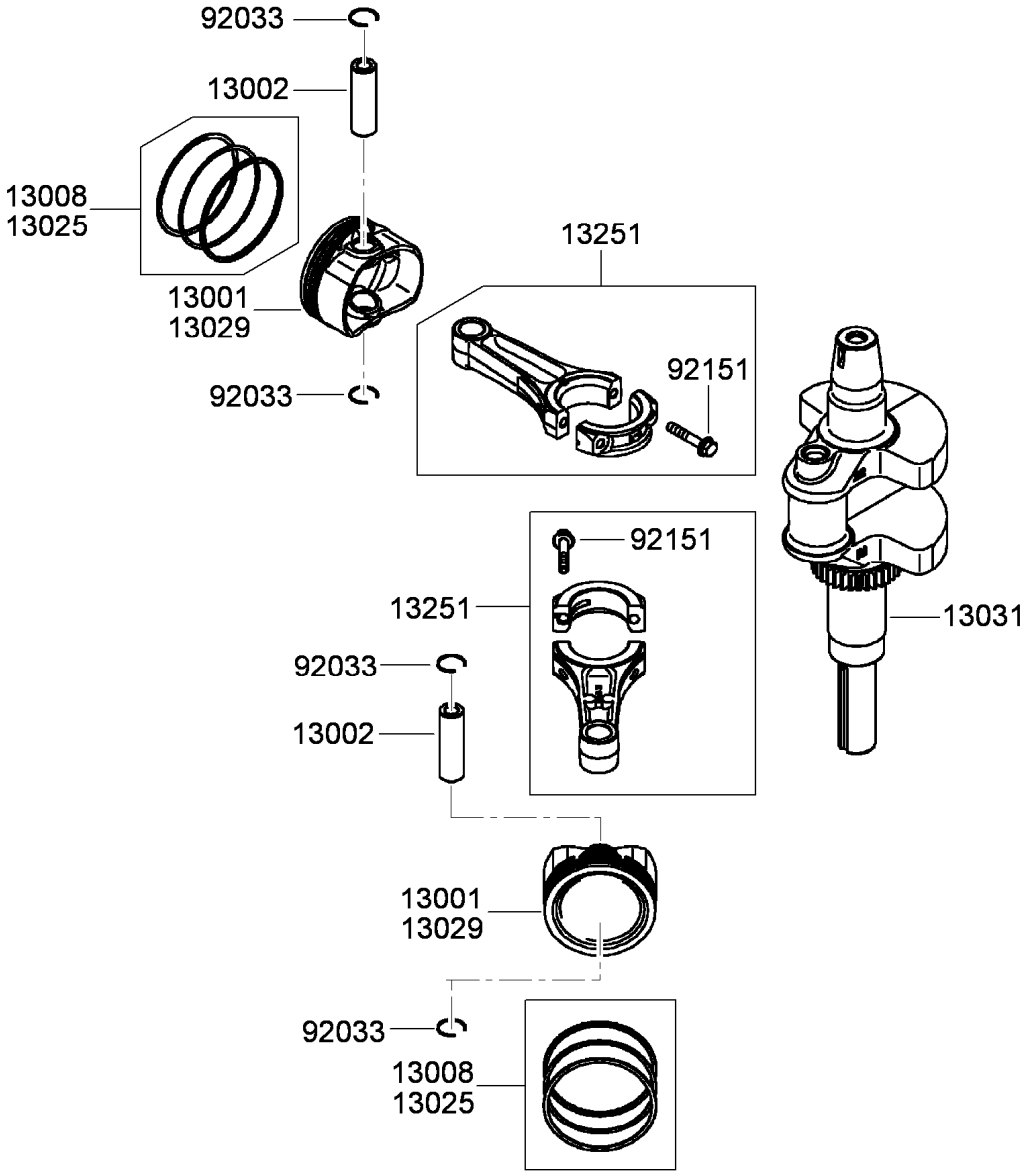

Piston and Crankshaft Assembly

Ref.	*Part Number*	*Qty.*	*Description*
13001	119-5824	2	Piston-Engine
13002	119-5825	2	Pin-Piston
13008	119-5826	2	Piston Ring Set
13025	119-5827	1	Piston Ring Set, L (0.5)
13029	119-5828	1	Piston-Engine, L (0.5)
13031	119-5829	1	Crankshaft ASM
13251	119-5830	2	Connecting Rod ASM
92033	119-5831	4	Ring-Snap
92151	115-6565	4	Bolt (6X35)

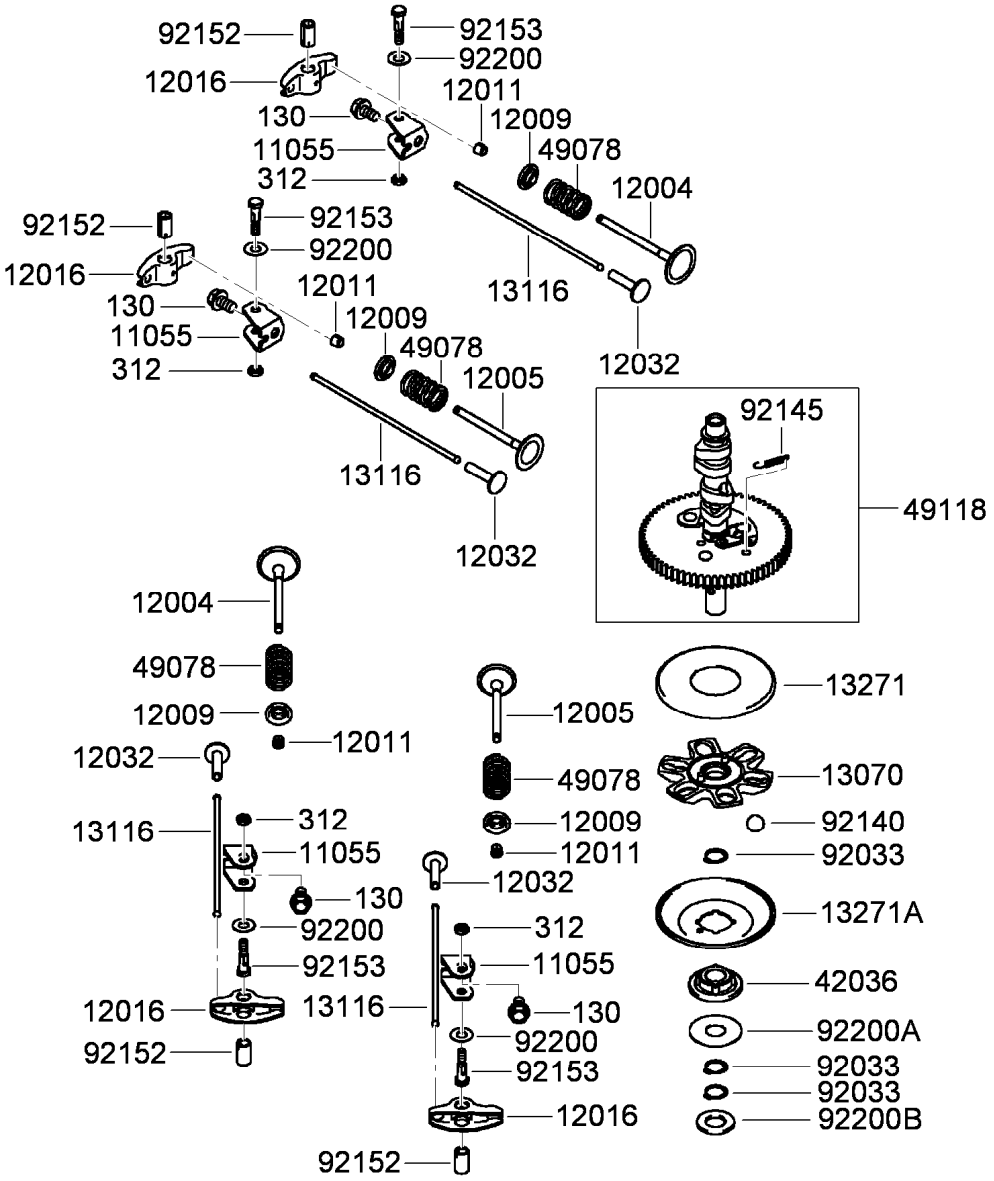

Valve and Camshaft Assembly

Ref.	Part Number	Qty.	Description
130	119-5845	4	Bolt-Flanged (8X14)
312	119-5846	4	Nut-Hex (6MM)
11055	119-5832	4	Bracket
12004	119-5833	2	Valve-Intake
12005	119-5834	2	Valve-Exhaust
12009	108-2525	4	Retainer-Spring, Valve
12011	95-9744	8	Collet
12016	119-5835	4	Arm-Rocker
12032	108-2527	4	Tappet
13070	119-5836	1	Guide-Govenor
13116	119-5837	4	Rod-Push
13271	114-8671	1	Plate

Ref.	Part Number	Qty.	Description
13271A	114-8672	1	Plate-Governor
42036	114-8673	1	Sleeve
49078	119-5838	4	Spring-Valve, Engine (In)
49118	119-5839	1	Camshaft ASM
92033	114-8675	3	Ring-Snap
92140	114-8676	6	Ball
92145	114-8677	1	Spring
92152	119-5840	4	Collar
92153	119-5841	4	Bolt (6X29.5)
92200	119-5842	4	Washer (8.1X18X0.5)
92200A	119-5843	1	Washer (16X42X0.91)
92200B	119-5844	1	Washer (16.3X30X2.28)

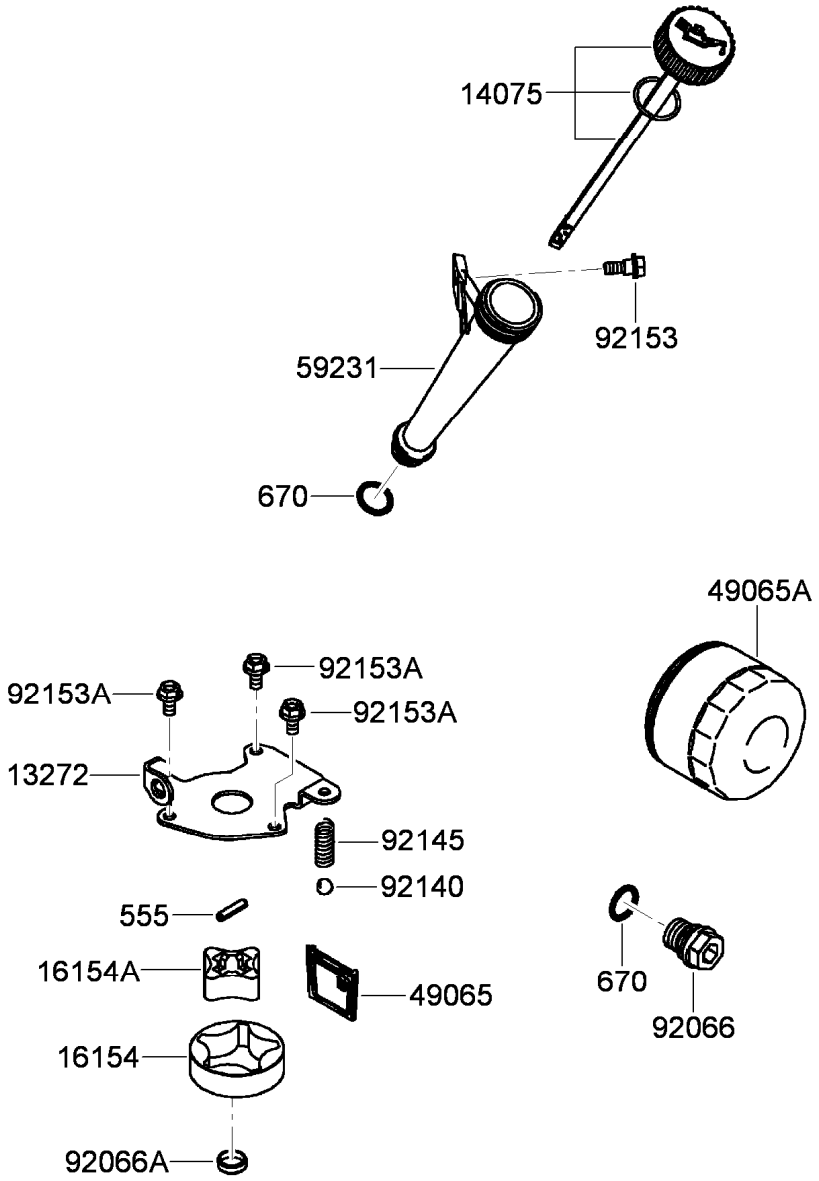

Lubrication Equipment Assembly

Ref.	Part Number	Qty.	Description
555	119-5859	1	Pin-Spring (4X20)
670	1-413506	2	O-Ring (16MM)
13272	119-5847	1	Plate-Rotor
14075	119-5848	1	Oil Gauge Cap ASM
16154	119-5849	1	Rotor-Pump, Outer
16154A	119-5850	1	Rotor-Pump, Inner
49065	119-5851	1	Filter-Oil
49065A	119-5852	1	Filter-Oil
59231	119-5853	1	Tube-Filler, Oil
92066	119-5854	1	Plug
92066A	119-5855	1	Plug
92140	119-5856	1	Ball
92145	119-5857	1	Spring
92153	119-5858	1	Bolt
92153A	115-6419	3	Bolt (6X12)

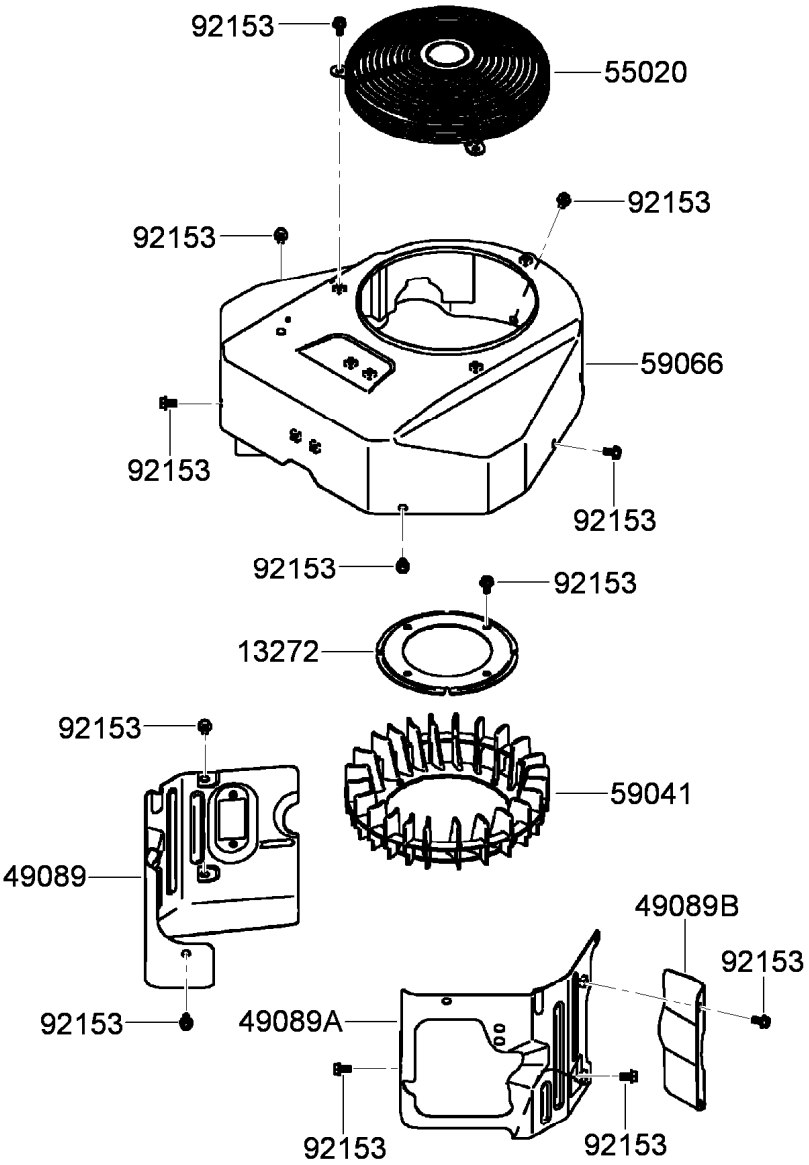

Cooling Equipment Assembly

Ref.	*Part Number*	*Qty.*	*Description*
13272	119-5860	1	Plate-Fan
49089	119-5862	1	Shroud-Engine
49089A	119-5863	1	Shroud-Engine
49089B	119-5864	1	Shroud-Engine
55020	119-5865	1	Guard
59041	119-5867	1	Fan
59066	119-5868	1	Housing-Fan
92153	114-8655	18	Bolt (6X12)

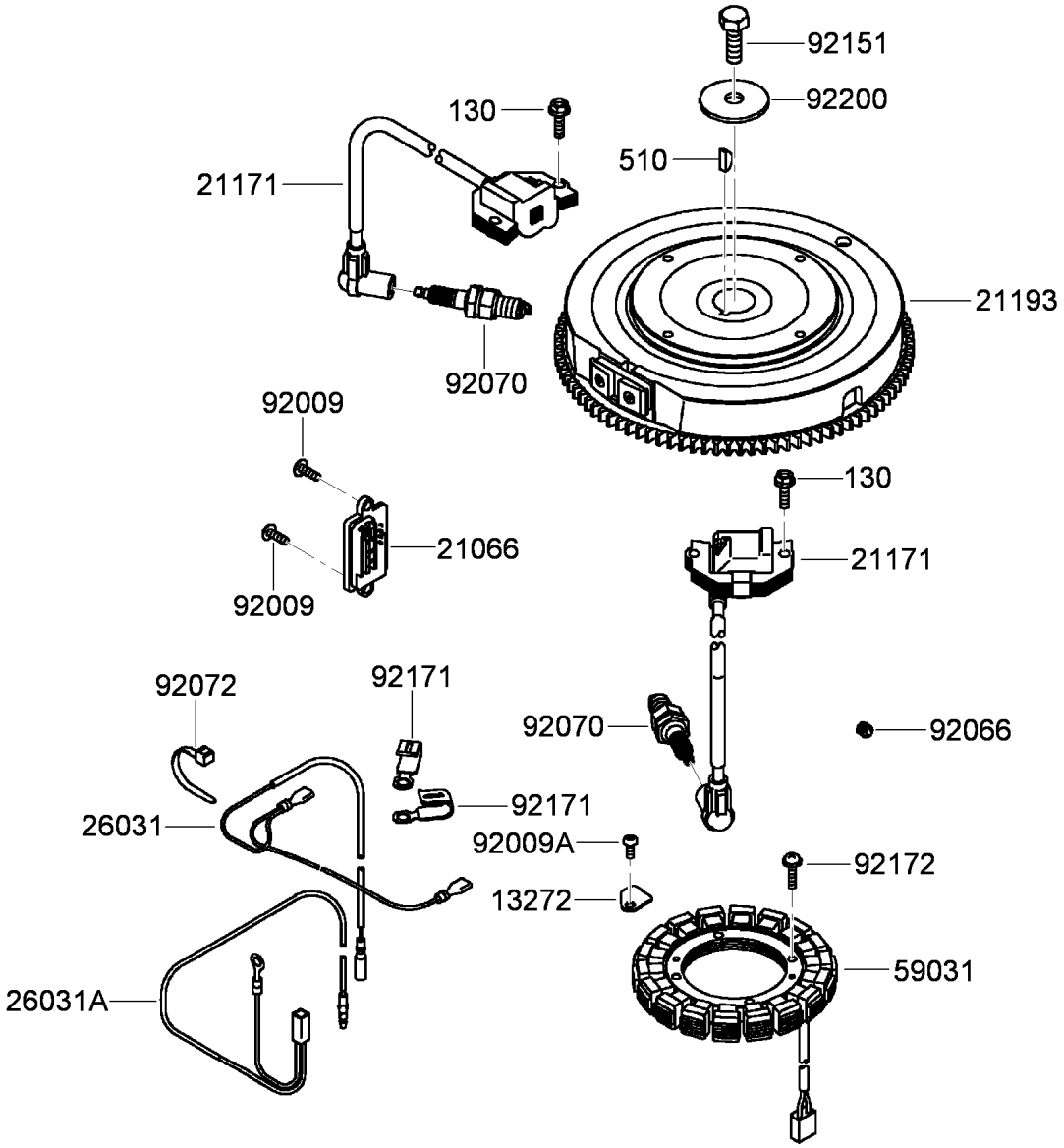

Electric Equipment Assembly

Ref.	Part Number	Qty.	Description
130	95-9893	4	Bolt-Flanged (6X20)
510	KW10163	1	Key-Woodruff
13272	119-5870	1	Plate
21066	120-7356	1	Regulator-Voltage
21171	119-5872	2	Ignition Coil ASM
21193	119-5874	1	Flywheel ASM
26031	119-5876	1	Harness
26031A	119-5877	1	Harness
59031	120-7355	1	Coil-Charging

Ref.	Part Number	Qty.	Description
92009	119-5879	2	Screw
92009A	95-9716	1	Screw
92066	119-5820	1	Plug
92070	92-2153	2	Plug-Spark
92072	115-6585	1	Band
92151	115-6408	1	Bolt (12X30)
92171	115-8665	2	Clamp
92172	115-4030	4	Screw (5X20)
92200	115-4031	1	Washer (12.2X46X3)

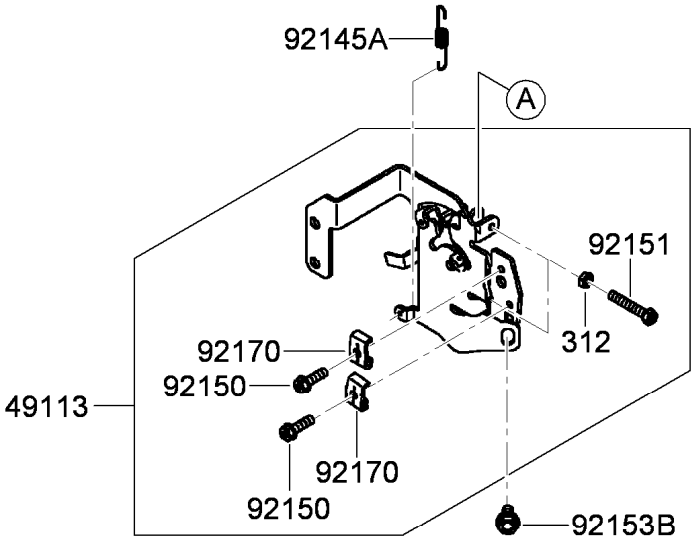

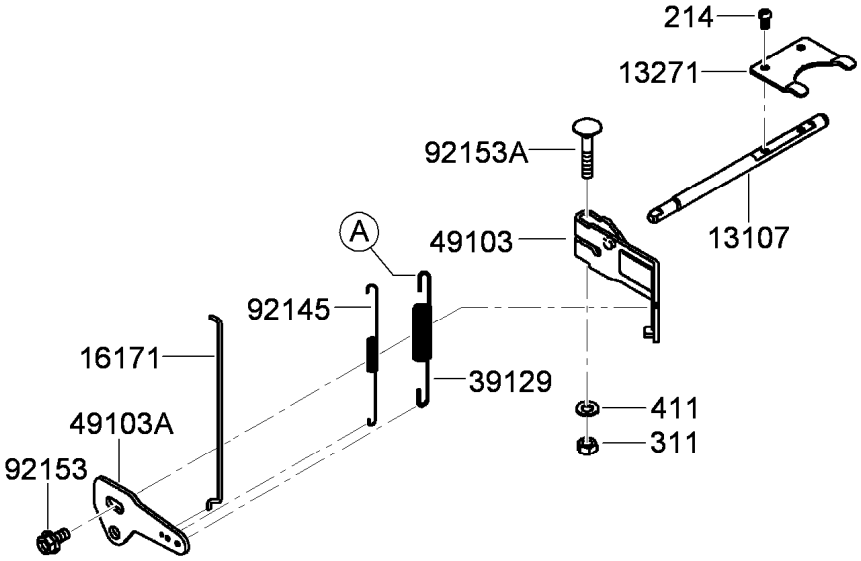

Control Equipment Assembly

Ref.	Part Number	Qty.	Description
214	115-6422	2	Screw-Pan (4X8)
311	114-8698	1	Nut-Hex (6MM)
312	119-5894	2	Nut-Hex (5MM)
411	115-6423	1	Washer-Plain (6MM)
13107	119-5882	1	Shaft-Governor
13271	119-5883	1	Plate
16171	119-5884	1	Link
39129	119-5885	1	Spring-Governor
49103	119-5886	1	Arm-Governor
49103A	119-5887	1	Arm-Governor

Ref.	Part Number	Qty.	Description
49113	119-5888	1	Control Panel ASM
92145	119-5889	1	Spring
92145A	119-5890	1	Spring
92150	95-9853	2	Bolt (5X18)
92151	119-5891	2	Bolt (5X30)
92153	119-5892	1	Bolt (6X12)
92153A	115-6420	1	Bolt (6X35)
92153B	119-5892	1	Bolt (6X12)
92170	115-6421	2	Clamp

Carburetor Assembly

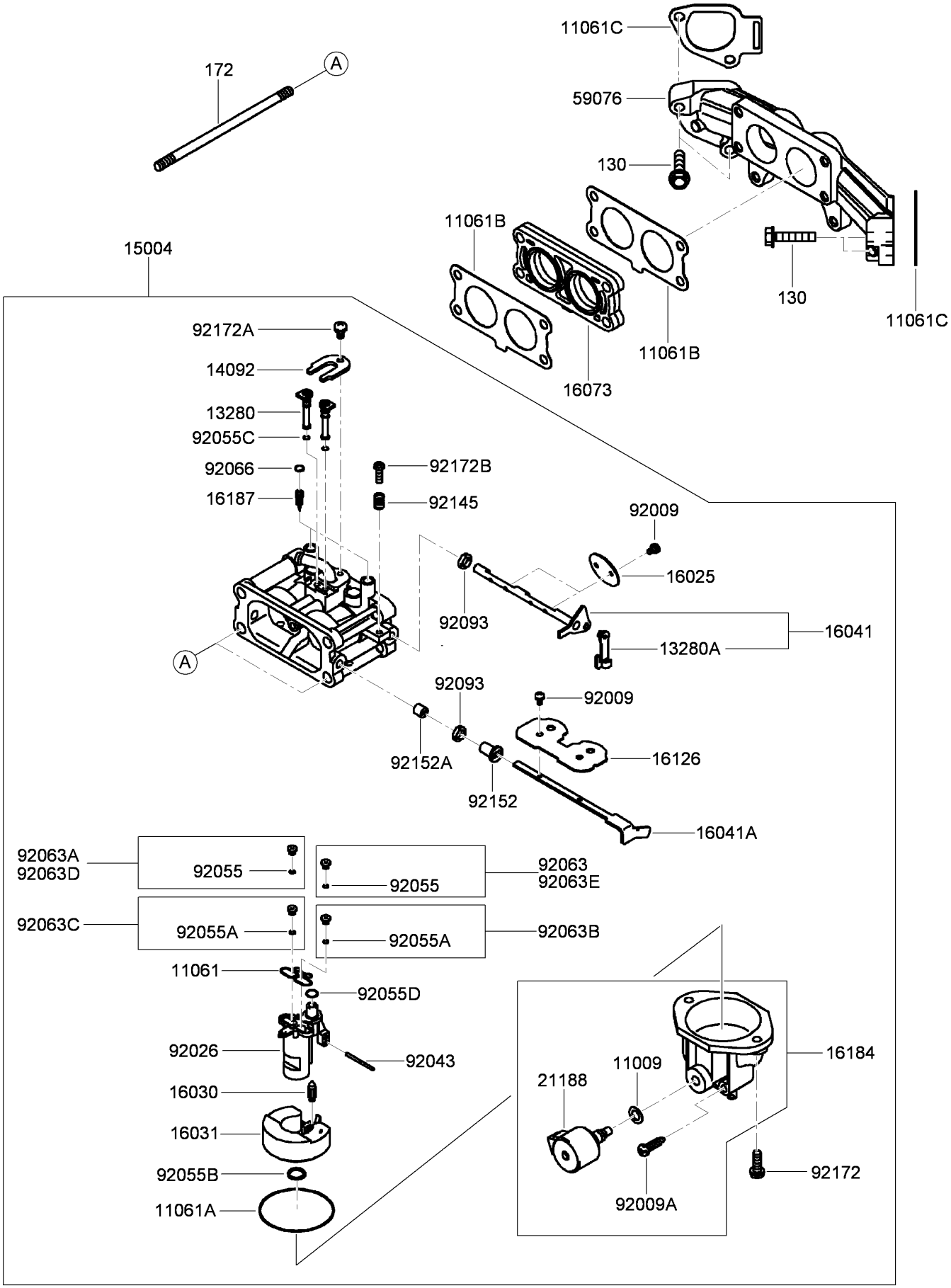

Carburetor Assembly (continued)

Ref.	Part Number	Qty.	Description
130	119-5940	4	Bolt-Flanged (6X30)
172	119-5941	2	Bolt-Stud (6X115)
11009	119-5895	1	Gasket
11061	119-5896	1	Gasket
11061A	119-5897	1	Gasket
11061B	119-5898	2	Gasket-Carburetor/Manifold
11061C	119-5899	2	Gasket-Manifold
13280	119-5901	2	Holder
13280A	119-5902	1	Holder
14092	119-5903	1	Cover
15004	119-5904	1	Carburetor ASM
16025	119-5905	2	Valve-Throttle
16030	119-5906	1	Valve-Float
16031	119-5907	1	Float
16041	119-5908	1	Carburetor Throttle Shaft ASM
16041A	119-5909	1	Shaft-Choke, Carburetor
16073	119-5910	1	Insulator
16126	119-5911	1	Valve
16184	119-5912	1	Float Chamber ASM
16187	119-5913	2	Needle-Jet
21188	119-5914	1	Solenoid
59076	119-5915	1	Manifold-Intake
92009	119-5916	6	Screw
92009A	119-5917	1	Screw-Drain
92026	119-5918	1	Spacer
92043	119-5919	1	Pin-Float
92055	119-5920	1	O-Ring
92055A	119-5921	2	O-Ring
92055B	119-5921	1	O-Ring
92055C	119-5923	2	O-Ring
92055D	119-5924	1	O-Ring
92063	119-5926	1	Jet-Main (No. 108)
92063A	119-5927	1	Jet-Main (No. 104)
92063B	119-5928	1	Jet-Main (No. 114)
92063C	119-5929	1	Jet-Main (No. 110)
92063D	119-5930	1	Jet-Main (No. 107)
92063E	119-5931	1	Jet-Main (No. 111)
92066	119-5932	2	Plug-Expansion
92093	119-5933	2	Seal (6.9)
92145	119-5934	1	Spring
92152	119-5935	1	Collar
92152A	119-5936	1	Collar
92172	119-5937	2	Screw (M5)
92172A	119-5938	1	Screw (M4)
92172B	119-5939	1	Screw-Adjust, Throttle

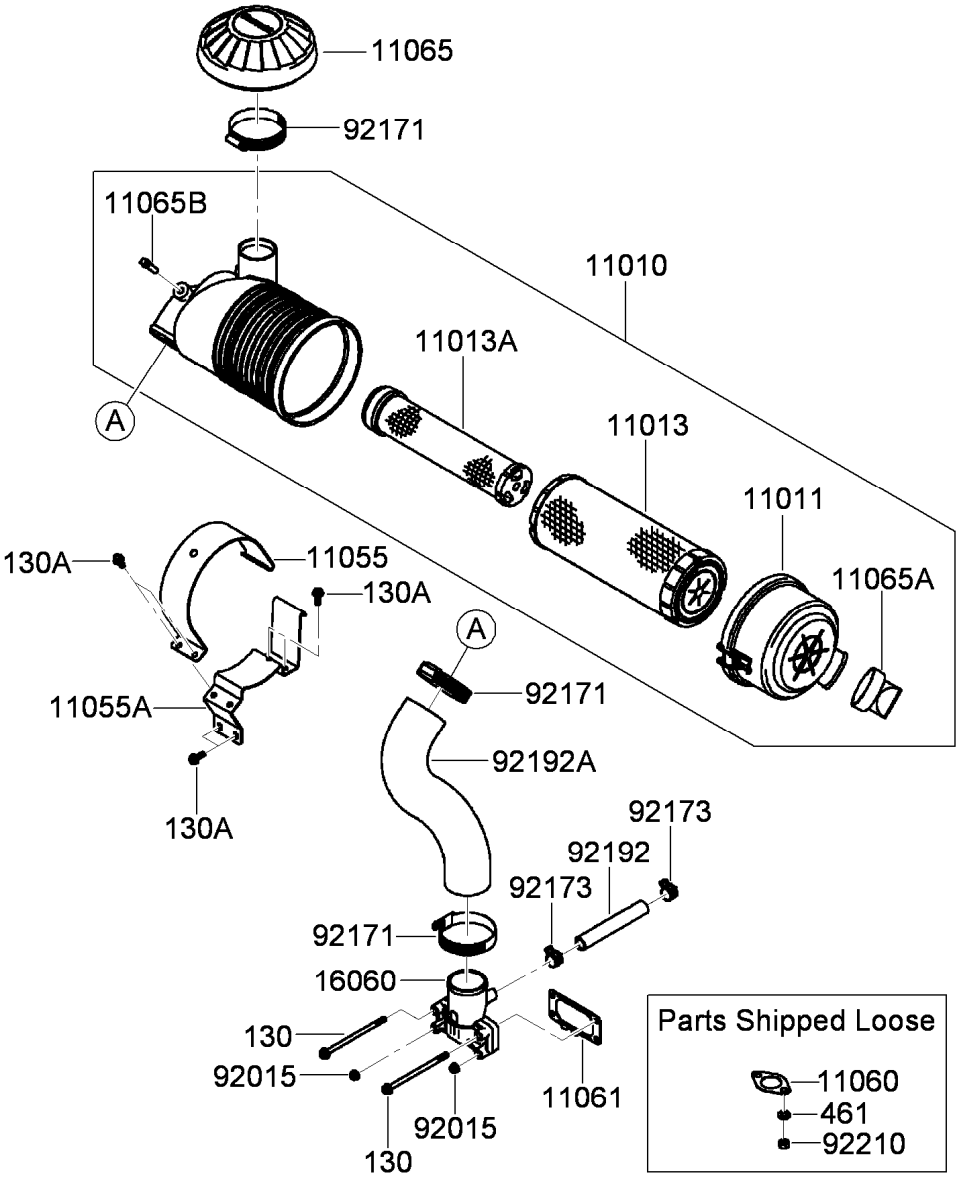

Air Filter and Muffler Assembly

Ref.	Part Number	Qty.	Description
130	119-5960	2	Bolt-Flanged (6X110)
130A	119-5961	6	Bolt-Flanged (6X16)
461	119-5962	4	Washer-Spring (8MM)
11010	119-5942	1	Air Filter ASM
11011	119-5943	1	Case-Filter, Air
11013	119-5944	1	Element-Filter, Air (Outer)
11013A	119-5945	1	Element-Filter, Air (Inner)
11055	119-5946	1	Bracket
11055A	119-5947	1	Bracket
11060	119-5948	2	Gasket-Muffler
11061	119-5949	1	Gasket

Ref.	Part Number	Qty.	Description
11065	119-5950	1	Cap
11065A	119-5951	1	Cap
11065B	119-5952	1	Cap
16060	119-5953	1	Pipe-Intake
92015	119-5954	2	Nut
92171	119-5955	3	Clamp
92173	119-5956	2	Clamp
92192	119-5957	1	Tube (12.6X18.6X118)
92192A	119-5958	1	Tube
92210	119-5959	4	Nut (M8)

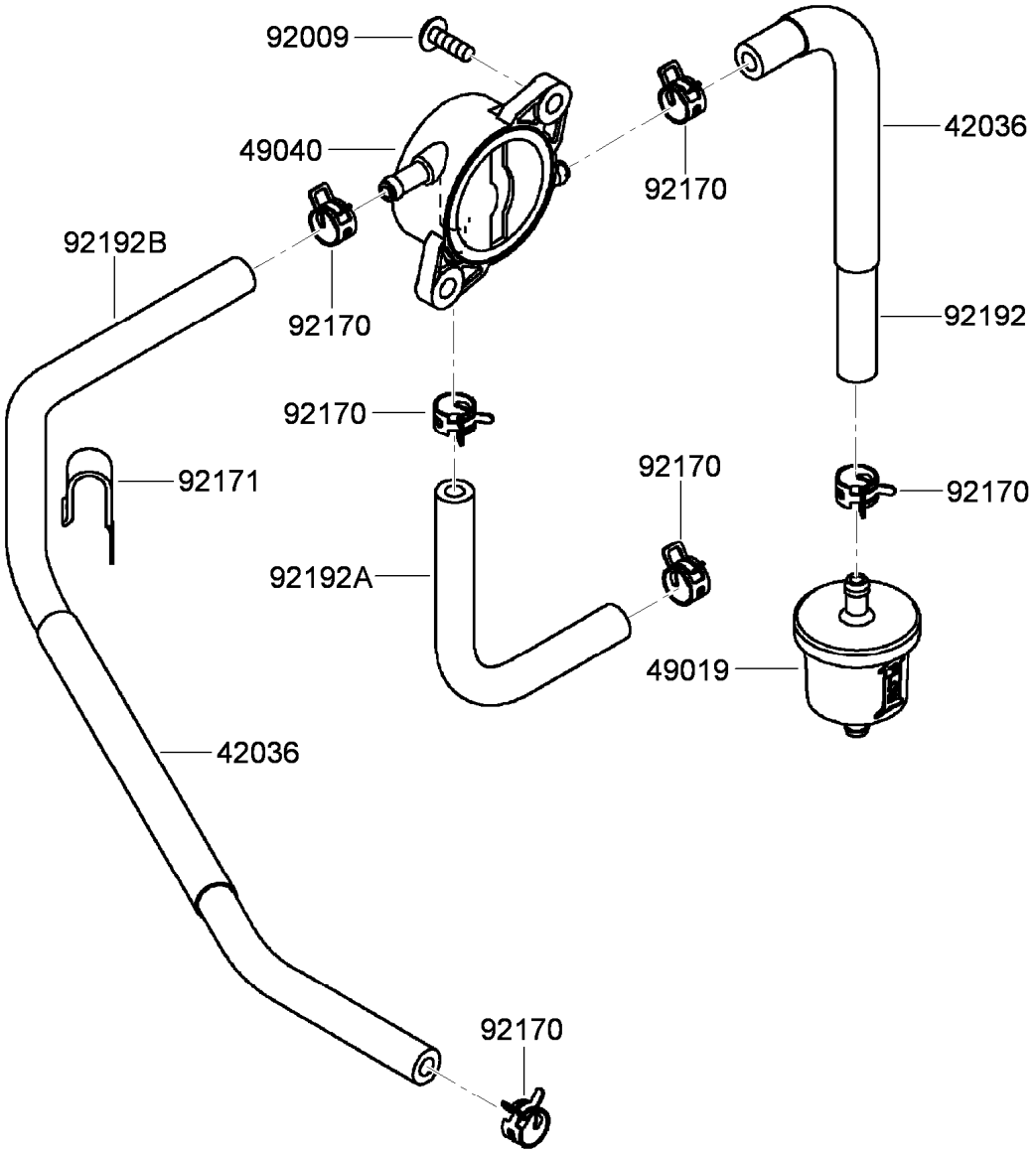

Fuel Tank and Valve Assembly

Ref.	*Part Number*	*Qty.*	*Description*
42036	119-5963	2	Sleeve
49019	119-5964	1	Filter-Fuel
49040	119-5965	1	Pump-Fuel
92009	119-5879	2	Screw
92170	119-5967	6	Clamp
92171	119-5968	1	Clamp
92192	119-5969	1	Tube (6.35X12.7X185)
92192A	119-5970	1	Tube (6.4X12.7X150)
92192B	119-5971	1	Tube (6.35X12.7X390)

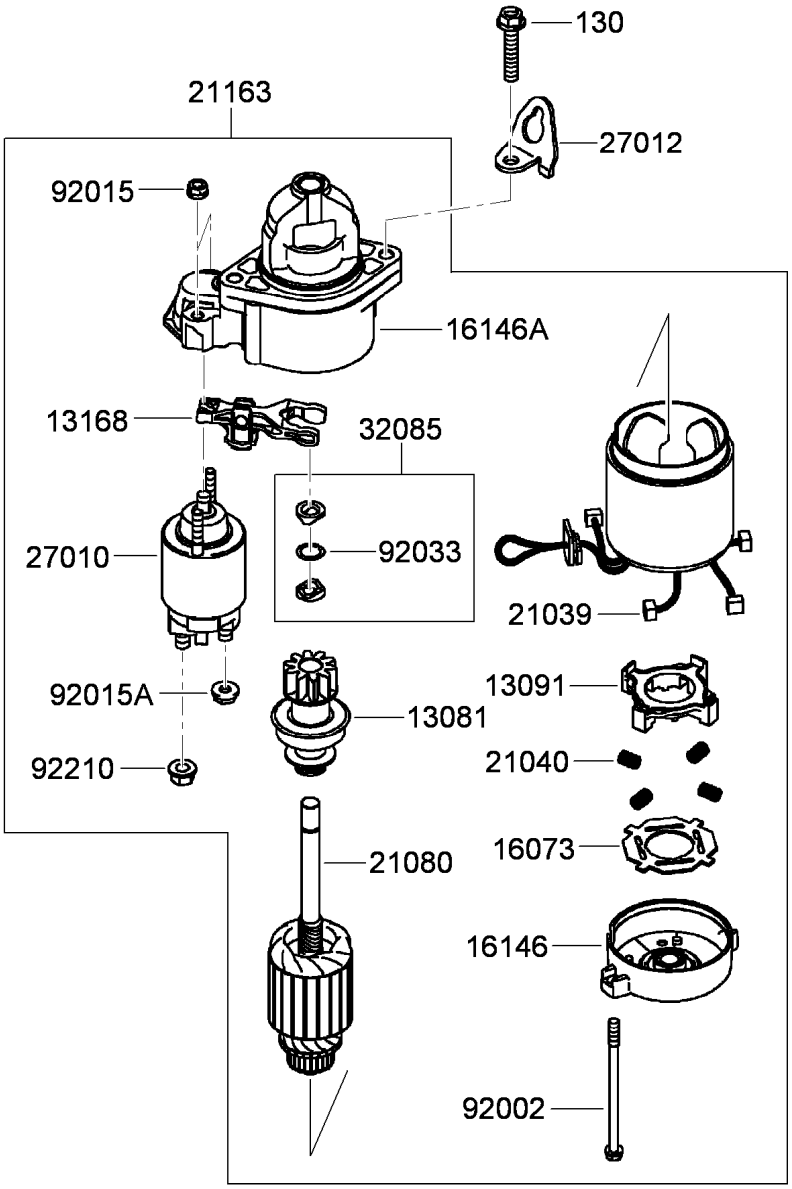

Starter Assembly

Ref.	Part Number	Qty.	Description
130	119-5991	2	Bolt-Flanged (8X40)
13081	119-5972	1	Clutch ASM
13091	119-5973	1	Holder-Brush
13168	119-5974	1	Lever-Shift
16073	119-5975	1	Insulator
16146	119-5976	1	Cover ASM
16146A	119-5977	1	Cover ASM
21039	119-5978	4	Brush
21040	119-5979	4	Spring-Brush
21080	119-5980	1	Armature

Ref.	Part Number	Qty.	Description
21163	119-5981	1	Starter-Electric
27010	119-5982	1	Switch
27012	119-5983	1	Hook
32085	119-5985	1	Stopper
92002	119-5986	2	Bolt
92015	119-5987	2	Nut
92015A	119-5988	1	Nut
92033	119-5989	1	Ring-Snap
92210	119-5990	1	Nut

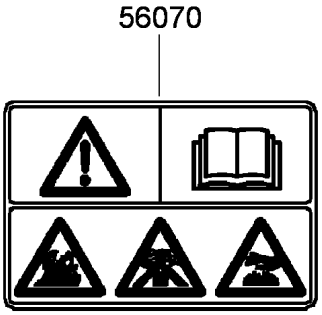

Label Set

Ref.	*Part Number*	*Qty.*	*Description*
56014	119-5992	1	Emblem
56070	115-6469	1	Label-Warning

Attachments and Accessories

For 22974 TRX-26 Trencher

Product Name	Model/Part
8in Chain Conversion Kit for 36in Soil Chain	117-3480
Crumber Kit	22477
24in X 4in Soil Chain	22480
24in X 4in Combination Chain	22481
24in X 4in Rock Tooth Chain	22482
24in X 6in Soil Chain	22483
24in X 6in Combination Chain	22484
24in X 6in Rock Tooth Chain	22485
36in X 4in Soil Chain	22486
36in X 4in Combination Chain	22487
36in X 4in Rock Tooth Chain	22488
36in X 6in Rock Tooth Chain	22489
36in X 6in Soil Chain	22490
36in X 6in Combination Chain	22491
48in x 4in Soil Chain	22492
48in x 4in Combination Chain	22493
48in x 6in Soil Chain	22494
48in x 6in Combination Chain	22495
24in Trencher Boom	22975
36in Trencher Boom	22976
48in Trencher Boom	22977
Backfill Blade	22980
Spark Arrestor Screen	94-8157

Notes:

TORO®

Count on it.