Form No. 3421-244 Rev B

TORO®

Count on it.

Parts Catalog

STX-38 EFI Stump Grinder

with Intelli-Sweep®

Model No. 23214—Serial No. 402000000 and Up

Register at www.Toro.com.
Original Instructions (EN)

CE

3421-244 B

Ordering Replacement Parts

To order replacement parts, please supply the part number, the quantity, and the description of each part desired.

Understanding Reference Numbers

Each identified part in an illustration has a reference number. The reference number for a part also appears in the parts list, along with other information about the part.

This catalog uses two special reference number formats, one to indicate parts in a service assembly and another to indicate the quantity of a given part in an illustration.

Service Assembly Reference Numbers

Parts in service assemblies have reference numbers in the form a:b. The a represents the reference number of the entire service assembly and the b represents a sequential number unique to each part within the service assembly.

For example, a wheel assembly might be identified by reference number 6, the tire by 6:1, the valve by 6:2, and the wheel by 6:3. When you order the assembly identified by reference number 6, you receive all parts identified by reference numbers 6:1,6:2, and 6:3. However, you may also order any part individually. Reference numbers of this type appear in illustration and in parts lists.

Reference Numbers Indicating Quantity

In an illustration, if a reference number indicates more than one part, the reference number has the form nX y. The n represents the quantity of the part, the X is the multiplication symbol, and the y represents the reference number.

For example, in an illustration, the reference number 2X 37 means that two of the parts identified by reference number 37 are indicated.

Contents

Main Frame Assembly 4
Cutter Valve Assembly No. 121-1022 6
Track and Drive Assembly 8
Hydraulic Motor Assembly No. 121-1957 10
Parking Brake Assembly 12
Engine Assembly 14
Hydraulic Gear Pump Assembly No. 121-1952 16
Control Assembly 18
Grinder Head Assembly 20
Hydraulic Motor Assembly No. 121-4325 22
Tower and Fuel Tank Assembly 24
Control Valve Assembly No. 119-4585 26
Two-Button Handle Grip Assembly No. 119-4587 27
Cooler Assembly 28
Hydraulic Hose Routing Assembly 30
Electrical Assembly 32

© 2023—The Toro® Company
8111 Lyndale Avenue South
Bloomington, MN 55420

Contact us at www.Toro.com.
Printed in the USA.
All Rights Reserved

Main Frame Assembly

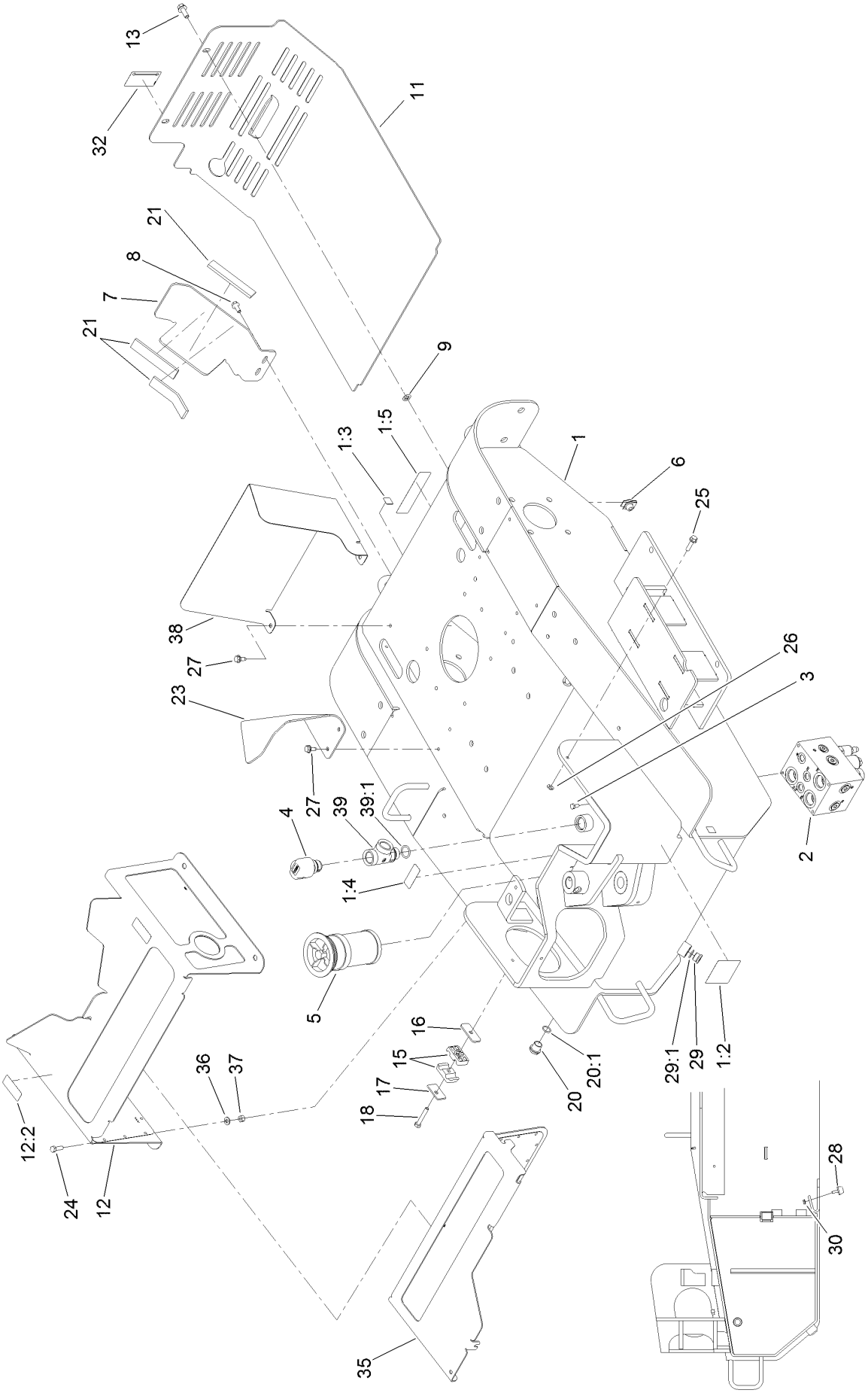

Main Frame Assembly (continued)

Ref.	Part Number	Qty.	Description
1	131-0747	1	Frame-Main
1:2	100-4650	1	Decal-Warning
1:3	93-9084	4	Decal-Point, Lift
1:4	93-6686	1	Decal-Oil, HYD
1:5	93-7814	1	Decal-Danger
2	121-1022	1	Valve-Cutter
3	321-3	4	Screw-HH
4	115-9793	1	Breather
5	115-5745	1	Cartridge-Filter
6	105-4886	2	Nut-Tinnerman
7	121-1141-01	1	Bracket-Tank
8	3234-47	2	Screw-HHF
9	107-3154	2	Nut-Push
11	121-4532	1	Cover-Rear
12	121-4562	1	Muffler Cover ASM
12:2	115-2047	2	Decal-Surface, Hot
13	3234-11	2	Screw-HHF
15	56-7976	2	Clamp-Tube
16	119-4636	1	Plate-Clamp
17	69-9760	1	Plate-Cover

Ref.	Part Number	Qty.	Description
18	322-10	1	Screw-HH
20	114-3075	1	Sight Glass ASM
20:1	237-79	1	O-Ring
21	121-0894	3	Pad-Foam
23	131-0640-01	1	Plate-Deflector, RH
24	322-5	4	Screw-HH
25	3234-36	2	Screw-HHF
26	117-2749	2	Nut-Push
27	32144-70	4	Screw-HWHTF
28	1-523420	2	Bumper
29	353-988	1	Plug-Hex
29:1	237-79	1	O-Ring
30	32128-33	2	Nut-HF
32	93-9363	1	Decal-Brake, Parking
35	131-0748-03	1	Cover
36	3256-23	4	Washer-Plain
37	3296-29	4	Nut-Lock, NI
38	127-9644	1	Bracket-Deflector
39	130-7571	1	Fitting-Tee
39:1	237-81	1	O-Ring

Cutter Valve Assembly No. 121-1022

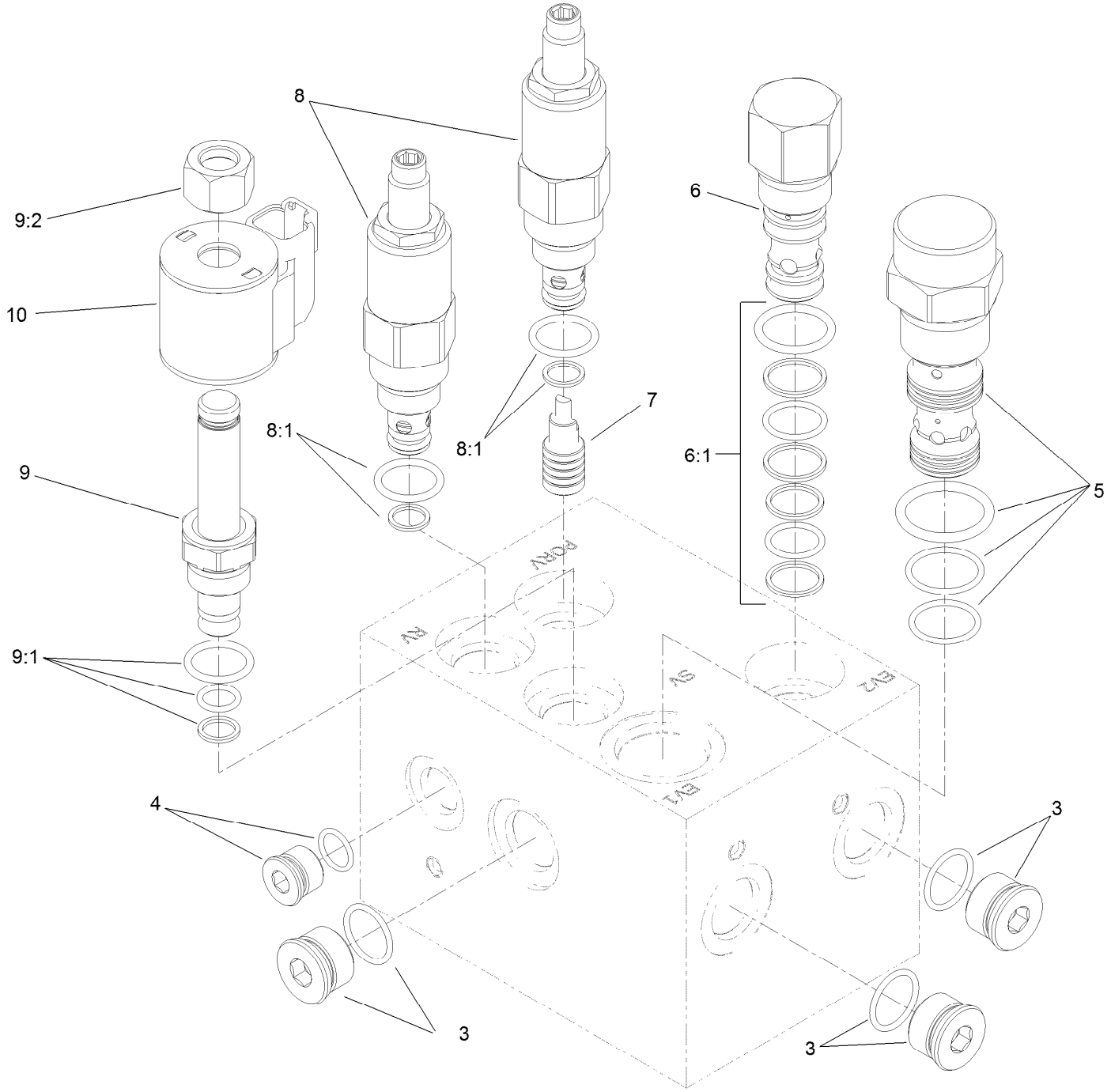

Cutter Valve Assembly No. 121-1022 (continued)

Ref.	Part Number	Qty.	Description
3	106-1027	3	Plug
4	112-9213	1	Plug
5	121-4561	1	Element-Logic, Vented
6	105-9153	1	Element-Logic, Vented
6:1	119-2159	1	Seal Kit
7	105-9157	1	Piston-Pilot

Ref.	Part Number	Qty.	Description
8	119-4620	2	Valve-Relief
8:1	105-9156	1	Seal Kit
9	107-7517	1	Valve-Solenoid
9:1	105-9156	1	Seal Kit
9:2	107-7812	1	Nut-Solenoid
10	112-0197	1	E Coil-12V DC

Track and Drive Assembly

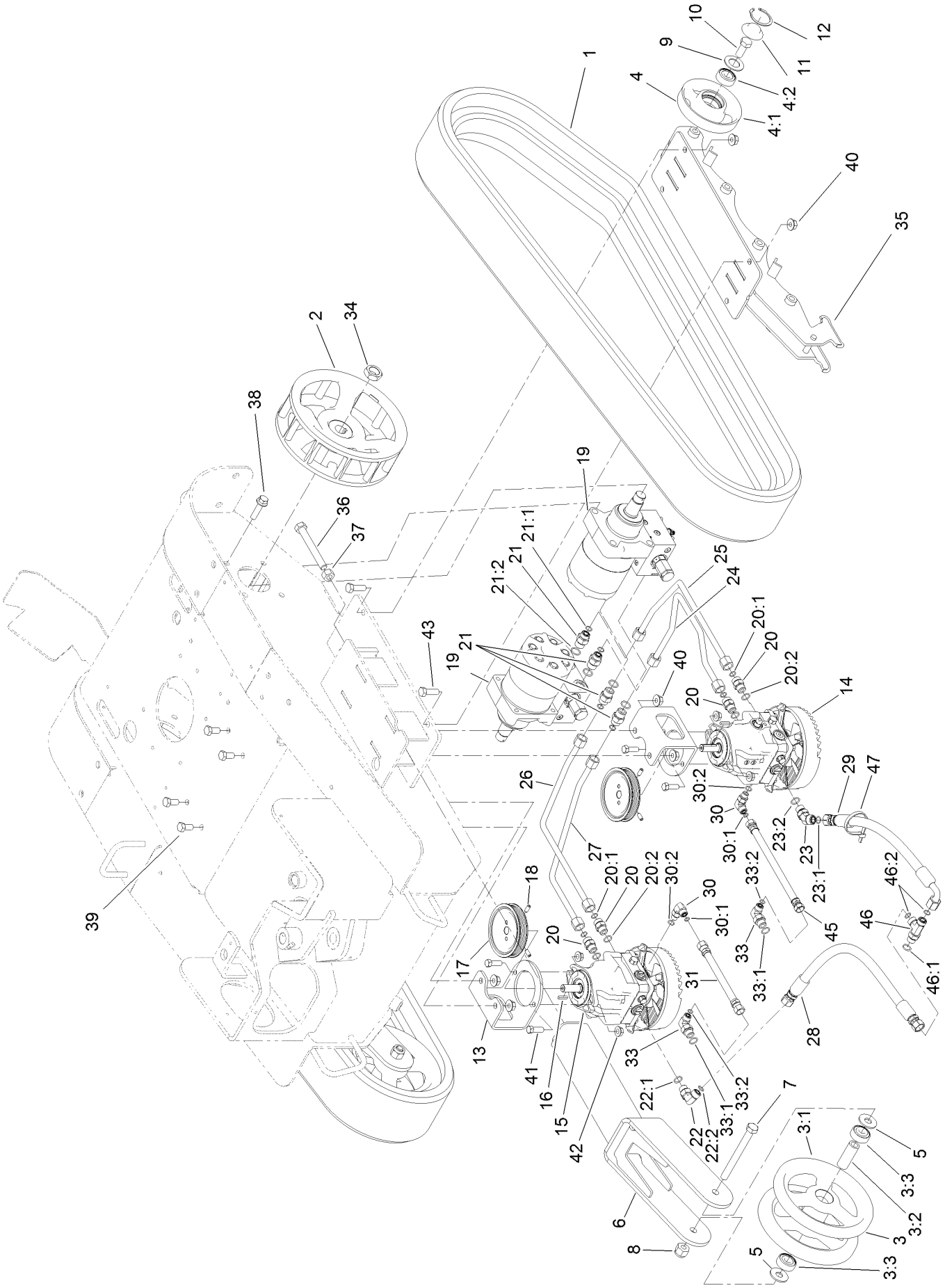

Track and Drive Assembly (continued)

Ref.	Part Number	Qty.	Description
1	121-1021	2	Track-Rubber
2	117-6426-03	2	Wheel-Drive
3	104-5745	2	Tensioner Wheel ASM
3:1	104-5747-03	1	Wheel-Tensioner
3:2	98-9835	1	Spacer-Wheel, Tensioner
3:3	120-5378	2	Bearing-Ball
4	112-4817	16	Wheel-Tensioner
4:1	114-3014-03	1	Wheel-Track
4:2	120-5378	1	Bearing-Ball
5	3256-7	4	Washer-Flat
6	121-1018-03	2	Arm-Tensioner
7	327-17	2	Screw-HH
8	3296-24	2	Nut-Hex
9	106-7585	16	Gasket-Bogie
10	327-4	16	Screw-HH
11	106-7557	16	Cap-Wheel, Bearing
12	106-7595	16	Ring-Snap, Internal
13	115-1289-03	2	Bracket-Mount, Pump
14	121-1953	1	Pump-HYD, LH
15	121-1954	1	Pump-HYD, RH
16	80-6090	2	Key-Pump
17	109-2202	2	Sheave
18	3246-6	4	Screw-Set, HSH
19	121-1957	2	HYD Motor ASM
20	340-4	4	Fitting-Straight
20:1	237-30	1	O-Ring
20:2	237-79	1	O-Ring
21	340-6	4	Fitting-Straight
21:1	237-30	1	O-Ring
21:2	237-80	1	O-Ring
22	340-98	1	Fitting-Elbow, 90 DEG
22:1	237-79	1	O-Ring
22:2	237-30	1	O-Ring
23	340-101	1	Fitting-HYD, 45 DEG
23:1	237-30	1	O-Ring
23:2	237-79	1	O-Ring
24	121-1124	1	Tube-HYD
25	121-1125	1	Tube-HYD
26	121-1126	1	Tube-HYD
27	121-1127	1	Tube-HYD
28	131-0650	1	Hose-HYD
29	131-0614	1	Hose-HYD
30	340-77	2	Fitting-Elbow, 90 DEG
30:1	237-22	1	O-Ring
30:2	237-42	1	O-Ring
31	94-4712	1	Hose-HYD
33	340-18	2	Fitting-HYD, 90 DEG
33:1	237-79	1	O-Ring
33:2	237-22	1	O-Ring
34	106-8159	2	Nut-Lock
35	121-0883-01	2	Mount-Wheel
36	125-0357	2	Screw-HH, TAP
37	3217-11	2	Nut-Hex
38	3234-27	8	Screw-HHF
39	325-4	4	Screw-HH
40	32128-49	12	Nut-HHF
41	324-5	4	Screw-HH
42	32128-42	4	Nut-HF
43	325-6	8	Screw-HH
45	76-9420	1	Hose-HYD
46	340-109	1	Fitting-Tee
46:1	237-79	1	O-Ring
46:2	237-30	2	O-Ring
47	3334-945	1	Tie-Cable

Hydraulic Motor Assembly No. 121-1957

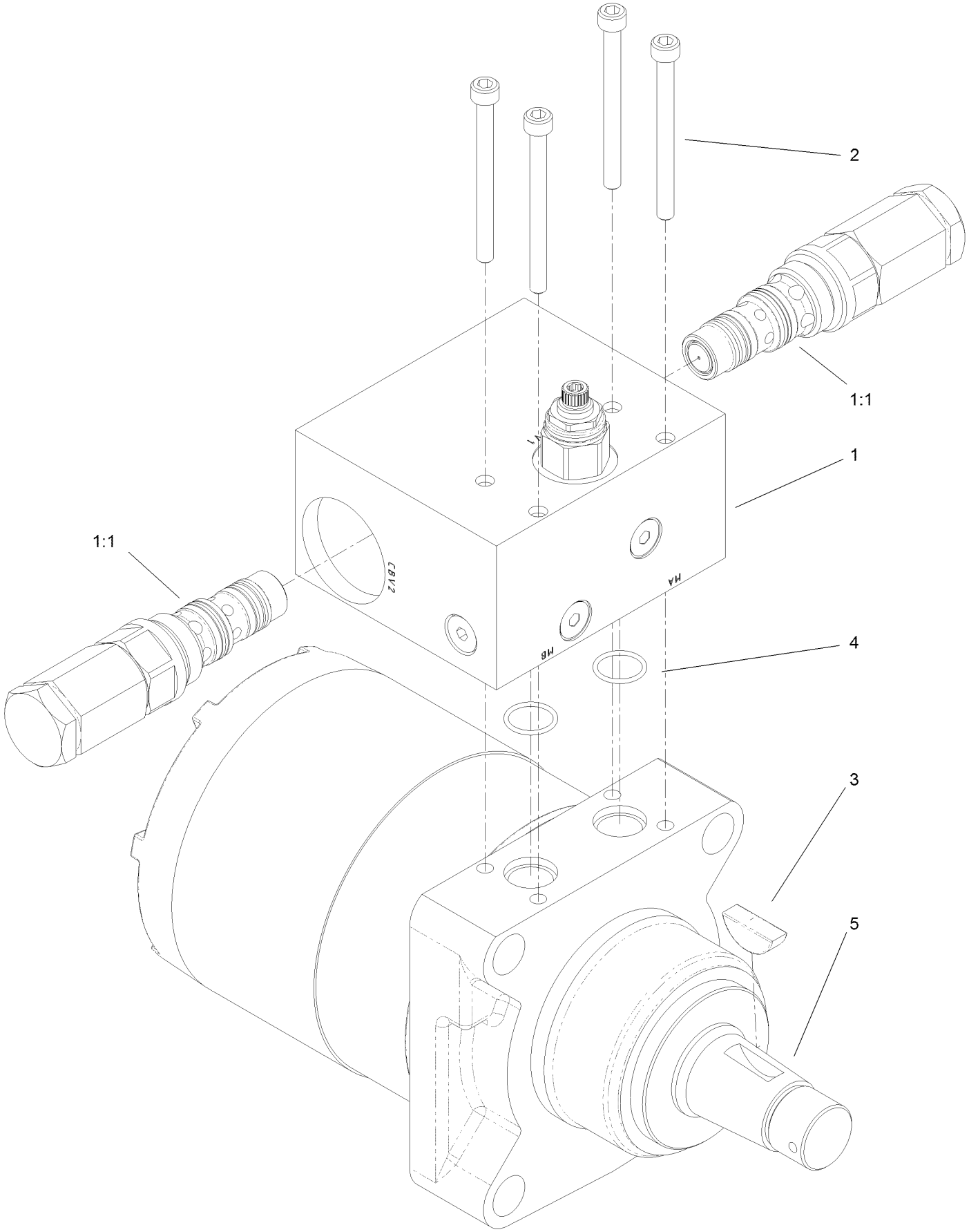

Hydraulic Motor Assembly No. 121-1957 (continued)

Ref.	Part Number	Qty.	Description
1	121-4464	1	Counterbalance Valve ASM
1:1	121-4463	2	Cartridge-CB
2	119-4611	4	Bolt-HSH
3	3257-42	1	Key-Woodruff
4	120-0691	2	O-Ring
5	76-0860	1	Shaft-Coupling
6	100-6131	1	Seal Kit ●

● Not illustrated

Parking Brake Assembly

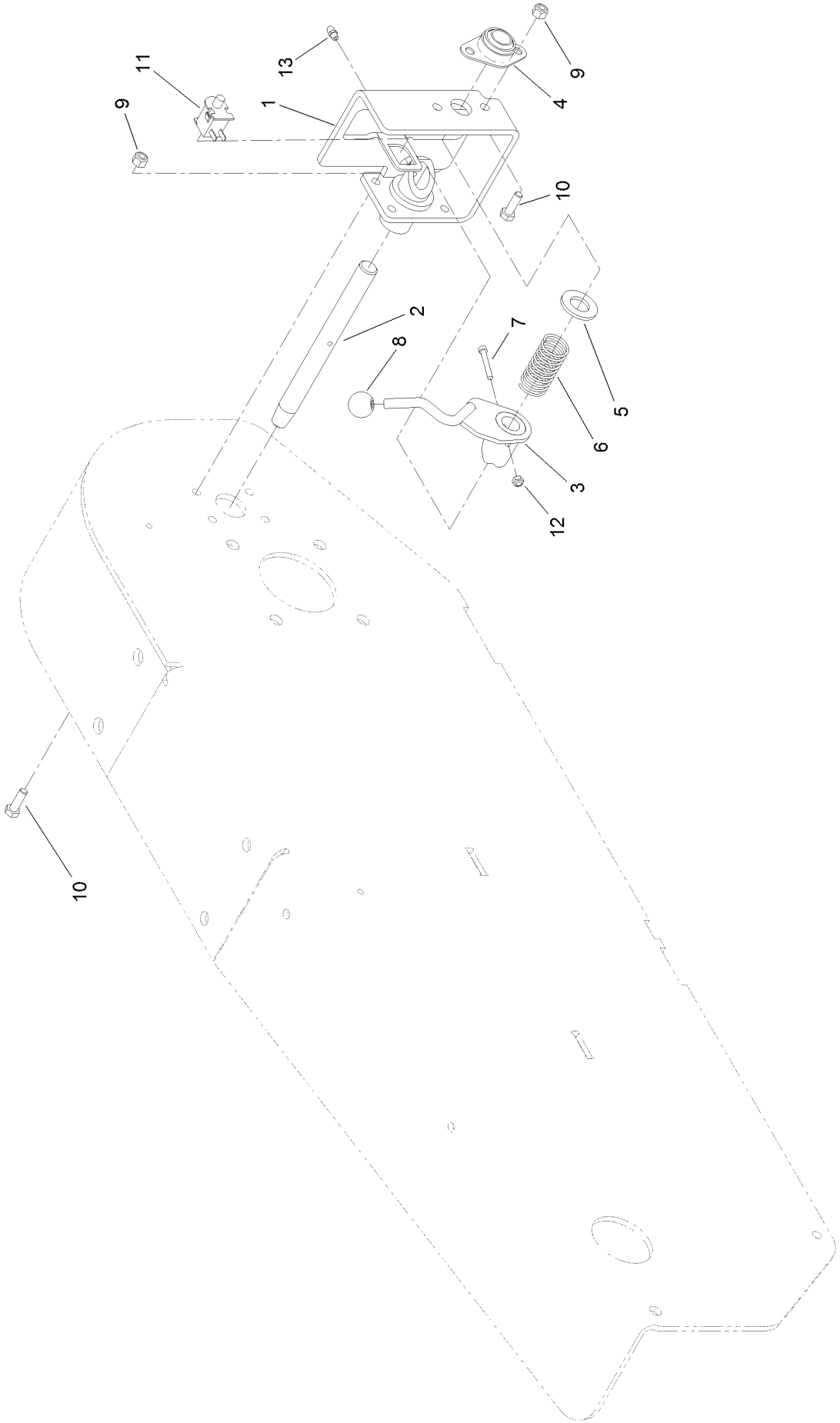

Parking Brake Assembly (continued)

Ref.	Part Number	Qty.	Description
1	125-0259-03	1	Bracket-Brake
2	121-4352	1	Shaft-Brake
3	121-4356-03	1	Handle-Brake
4	27-2320	1	Bearing
5	3256-28	1	Washer-Flat
6	125-0344	1	Spring-Compression
7	3274-59	1	Screw-HSH
8	233-69	1	Knob
9	3296-29	6	Nut-Lock, NI
10	322-5	6	Screw-HH
11	740275	1	Switch
12	3296-2	1	Nut-Lock, NI
13	302-5	1	Fitting-Grease

Engine Assembly

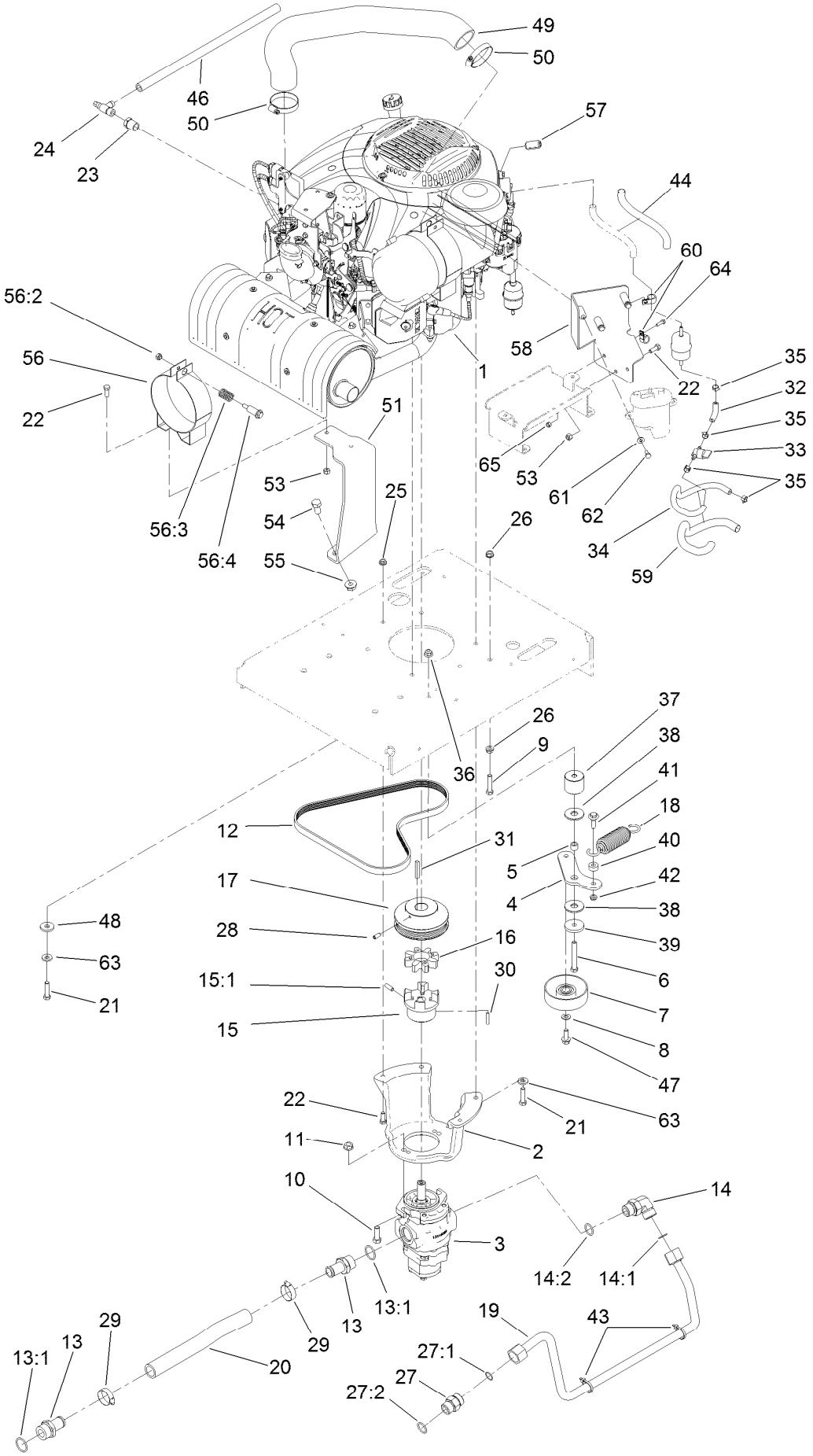

Engine Assembly (continued)

Ref.	Part Number	Qty.	Description
1		1	Engine-Kohler Cv224 ●■
2	132-8665-03	1	Mount-Pump
3	121-1952	1	Gear Pump ASM
4	125-0252	1	Arm-Idler
5	1-413088	1	Bushing-Lever, Lift
6	323-14	1	Screw-HH
7	95-8802	1	Pulley-Idler
8	3256-24	1	Washer-Plain
9	323-9	1	Screw-HH
10	324-5	2	Screw-HH
11	32128-37	2	Nut-HF
12	121-4326	1	Belt-V
13	354-78	2	Fitting-STR
13:1	237-146	1	O-Ring
14	340-142	1	Fitting-Elbow, 90 DEG
14:1	237-58	1	O-Ring
14:2	237-81	1	O-Ring
15	121-4330	1	Hub-Coupler
15:1	100-7594	1	Screw-Set
16	104-3542	1	Spider
17	121-1028	1	Pulley-Engine
18	121-4523	1	Spring-Extension
19	121-1128	1	Tube-HYD
20	121-4340	1	Hose-Suction
21	323-8	4	Screw-HH
22	322-4	6	Screw-HH
23	103-1390	1	Bushing
24	103-1965	1	Valve-Drain, Oil
25	32128-20	2	Nut-HF
26	3290-357	2	Nut-HSF
27	340-9	1	Fitting-STR
27:1	237-58	1	O-Ring
27:2	237-81	1	O-Ring
28	3246-6	2	Screw-Set, HSH
29	2412-34	2	Clamp-Hose
30	27-8590	1	Key-Square
31	608006	1	Key-Square
32	99-9415	1	Hose-Fuel
33	1-603770	1	Valve-Fuel
34	109-0298	1	Line-Fuel
35	2412-98	4	Clamp-Hose
36	104-8301	1	Nut-HF, NI
37	125-0251	1	Spacer-Idler
38	114-0463	2	Washer-Friction, Composite
39	110-9981	1	Washer-Plain
40	104-8426	1	Spacer
41	614672	1	Screw-Shoulder, HWH
42	3296-59	1	Nut-Lock, NI
43	3290-379	2	Tie-Cable
44	131-0736	1	Sleeve-Thermal
46	98-4667	1	Hose
47	3234-11	1	Screw-HHF
48	1-373034	2	Washer
49	131-0616	1	Hose-Intake, Air
50	2412-42	2	Clamp-Hose
51	131-0730-01	1	Plate-Mount, Filter
53	3296-29	4	Nut-Lock, NI
54	325-4	2	Screw-HH
55	32128-49	2	Nut-HHF
56	100-4825	1	Band-Mounting, Air Cleaner
56:2	94-3653	1	Bolt
56:3	94-3654	1	Spring
56:4	48-9510	1	*obs* Nut
57	112-1540	1	Ferrite-Snap On
58	131-0728-01	1	Bracket-Pump, Fuel
59	131-0575	1	Sleeve-Thermal
60	2412-87	2	Clamp-Cable
61	3256-22	3	Washer-Flat
62	321-3	3	Screw-HH
63	98-5975	4	Washer-Belleville
64	321-5	1	Screw-HH
65	3296-42	1	Nut-Lock, NI

● Not serviced separately

■ Obtain parts from www.kohlerplus.com

Hydraulic Gear Pump Assembly No. 121-1952

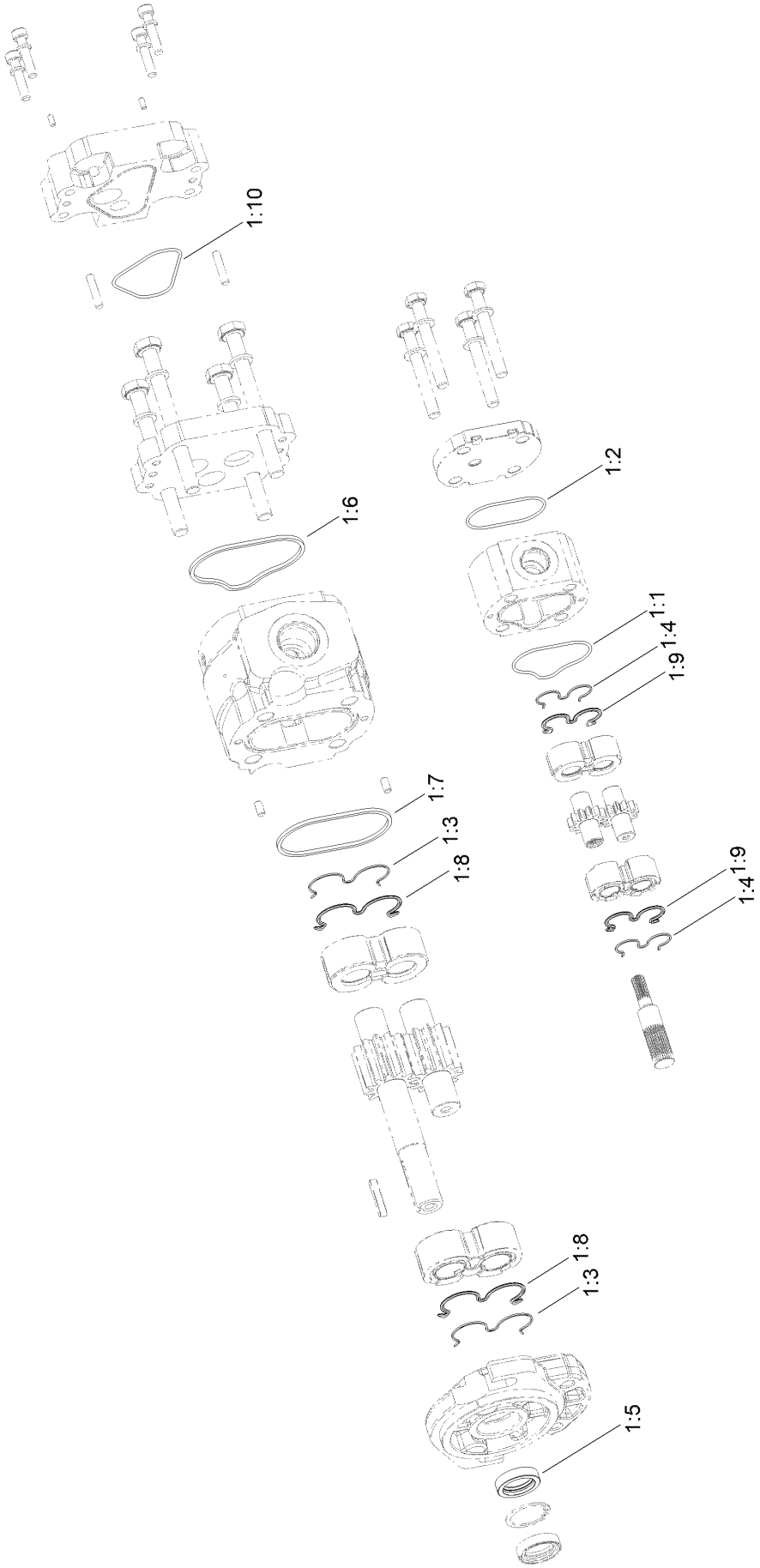

1 = ITEMS 1:1 - 1:10

Hydraulic Gear Pump Assembly No. 121-1952 (continued)

Ref.	Part Number	Qty.	Description
1	147-1924	1	Seal Kit
1:1		1	O-Ring ●
1:2		1	O-Ring Seal ●
1:3		2	Anti-Extrusion ●
1:4		2	Anti-Extrusion ●
1:5		2	Shaft Seal ●
1:6		1	Seal ●
1:7		1	Standard Seal ●
1:8		2	Seal ●
1:9		2	Seal ●
1:10		1	O-Ring Seal ●

● Not serviced separately

Control Assembly

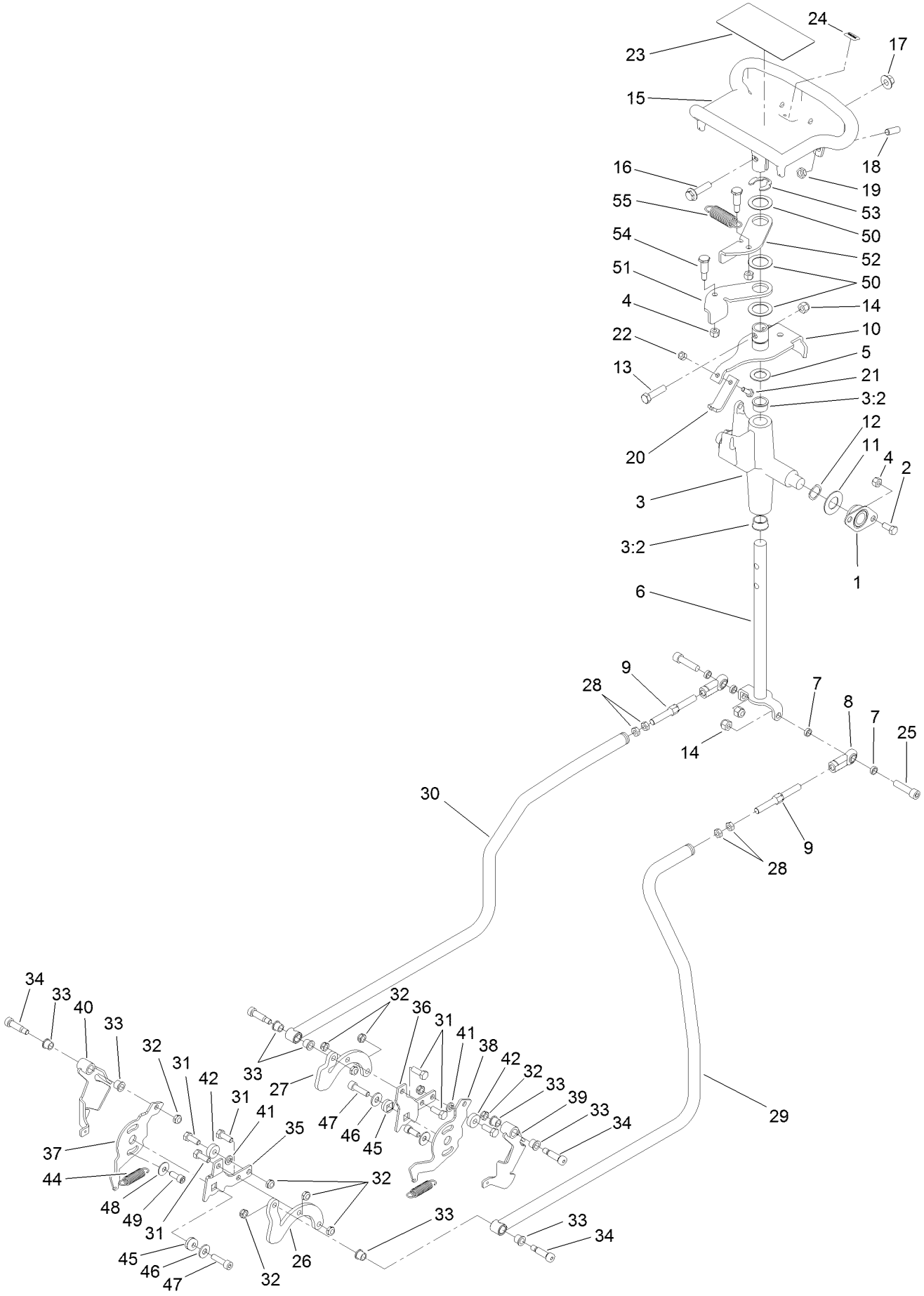

Control Assembly (continued)

Ref.	Part Number	Qty.	Description
1	27-2320	2	Bearing
2	322-3	4	Screw-HH
3	106-5737	1	Control Support ASM
3:2	256-252	2	Bearing-Flange
4	3296-29	6	Nut-Lock, NI
5	257-8	1	Washer-Thrust
6	117-6335	1	Rod-Drive
7	108-0634	4	Spacer-Plate, Retaining
8	103-1167	2	Joint-Ball End, LH
9	121-4506	2	Link-Control, Adjustment
10	112-2783	1	Lever-Pivot
11	3256-39	2	Washer-Flat
12	95-3703	2	Washer-Spring, Wave
13	323-8	1	Screw-HH
14	3296-39	3	Nut-Lock, NI
15	120-5380-03	1	Handle-Control
16	3234-18	1	Screw-HHF
17	32128-43	1	Nut-Flange
18	3247-6	2	Screw-Set
19	3218-3	2	Nut-Jam
20	115-1204	1	Plate-Neutral
21	321-4	1	Screw-HH
22	3296-42	1	Nut-Lock, NI
23	115-4020	1	Decal-Traction
24	98-1459	1	Decal
25	3274-2	2	Screw-HSH
26	121-1123	1	Plate-Control, LH
27	121-1122	1	Plate-Control, RH
28	3220-3	4	Nut-HJ
29	121-4513	1	Rod-Control, LH
30	121-4514	1	Rod-Control, RH
31	322-4	6	Screw-HH
32	3296-47	10	Nut-Lock,NI
33	256-116	8	Bushing-Flange
34	114-8629	4	Bolt-Shldr
35	115-6628	1	Plate-Arm, Return, LH
36	115-6536	1	Plate-Arm, Return
37	115-6549	1	Plate-Base, LH
38	115-6535	1	Plate-Base, RH
39	115-6636	1	Pivot-RH
40	115-6637	1	Pivot-LH
41	3253-4	2	Washer-Lock
42	251-259	2	Bearing-Ball
44	121-4409	2	Spring-Extension
45	117-6429	2	Lock-Trunion
46	3256-3	2	Washer-Flat
47	94-3559	2	Screw-HSH
48	3290-456	2	Washer-Belleville
49	3273-14	2	Screw-HSH
50	108-9743	3	Washer-Plain
51	98-8407	1	Lever-Return, RH
52	98-8408	1	Lever-Return, LH
53	32151-91	1	Ring-Retaining
54	63-2650	2	Screw-Shoulder
55	108-4724	1	Spring-Extension

Grinder Head Assembly

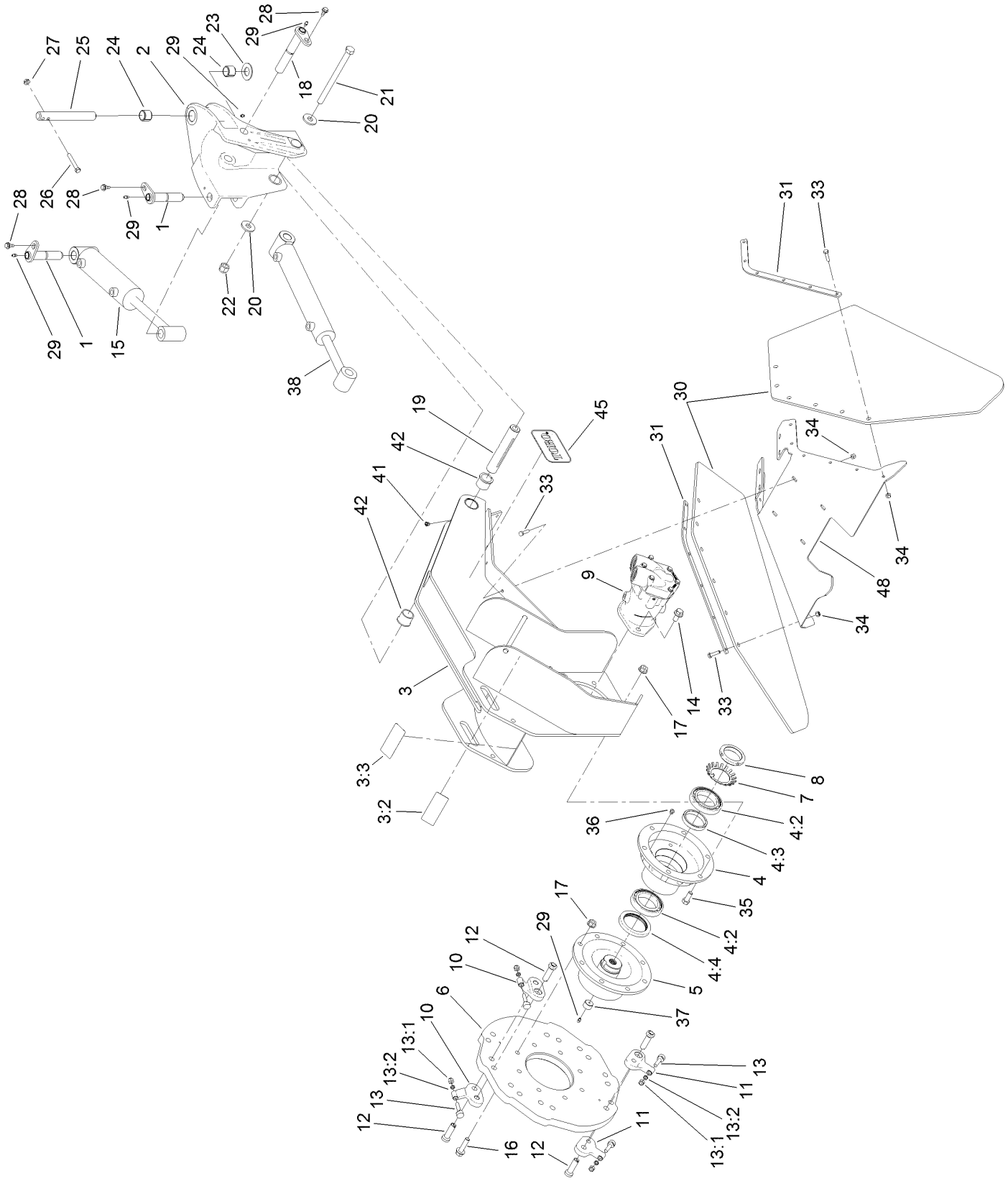

Grinder Head Assembly (continued)

Ref.	Part Number	Qty.	Description
1	121-1113	2	Pin-Pivot
2	121-4565-01	1	Head-Pivot
3	121-4575	1	Grinder Head ASM
3:2	93-7321	2	Decal-Danger
3:3	107-9366	1	Decal-Warning
4	121-4458	1	Wheel Bearing Housing ASM
4:2	121-4378	2	Bearing-Ball
4:3	121-0872	1	Spacer-Bearing
4:4	121-4379	1	Seal-Grease
5	121-4337	1	Shaft-Cutter
6	121-1012-03	1	Plate-Wheel, Cutter
7	104-5915	1	Washer-Lock, Bearing
8	104-1973	1	Nut-Lock, Bearing
9	121-4325	1	HYD Motor ASM
10	115-9384	12	Pocket-Angled
11	115-9388	4	Pocket-Straight
12	121-4318	16	Bolt-HSH
13	115-9385	16	Grinder Tooth ASM
13:1	3296-39	1	Nut-Lock, NI
13:2	121-4365	1	Spacer-Tooth
14	3234-6	2	Screw-HHF
15	121-1956	1	HYD Cylinder ASM
15:99	137-4885	1	Seal Kit ●
16	3234-27	8	Screw-HHF
17	32128-49	14	Nut-HHF
18	121-0860	2	Pin-Pivot
19	121-4571	1	Spacer-Pivot
20	104-9216	2	Washer-Hardened
21	117-6327	1	Bolt-HH
22	3296-53	1	Nut-Lock, NI
23	256-121	1	Washer-Thrust
24	98-4871	2	Bushing-Tension
25	121-1112	1	Pin-Pivot, Grinder
26	323-47	1	Screw-HH
27	3290-357	1	Nut-HSF
28	99-5105	4	Screw-Shoulder
29	302-5	6	Fitting-Grease
30	121-4557	2	Shield-Chip
31	121-4558-03	2	Plate-Clamp,Chip
33	322-6	20	Screw-HH
34	3296-29	20	Nut-Lock, NI
35	325-5	6	Screw-HH
36	302-34	1	Fitting-Lube
37	121-0875	1	Plug-Shaft, Cutter
38	121-1955	1	HYD Cylinder ASM
41	302-11	1	Fitting-Lube, 45 DEG
42	104-0015	2	Bushing-Flange
45	104-3989	2	Decal
48	130-7583-03	1	Plate-Mount, Guard

● Not illustrated

Hydraulic Motor Assembly No. 121-4325

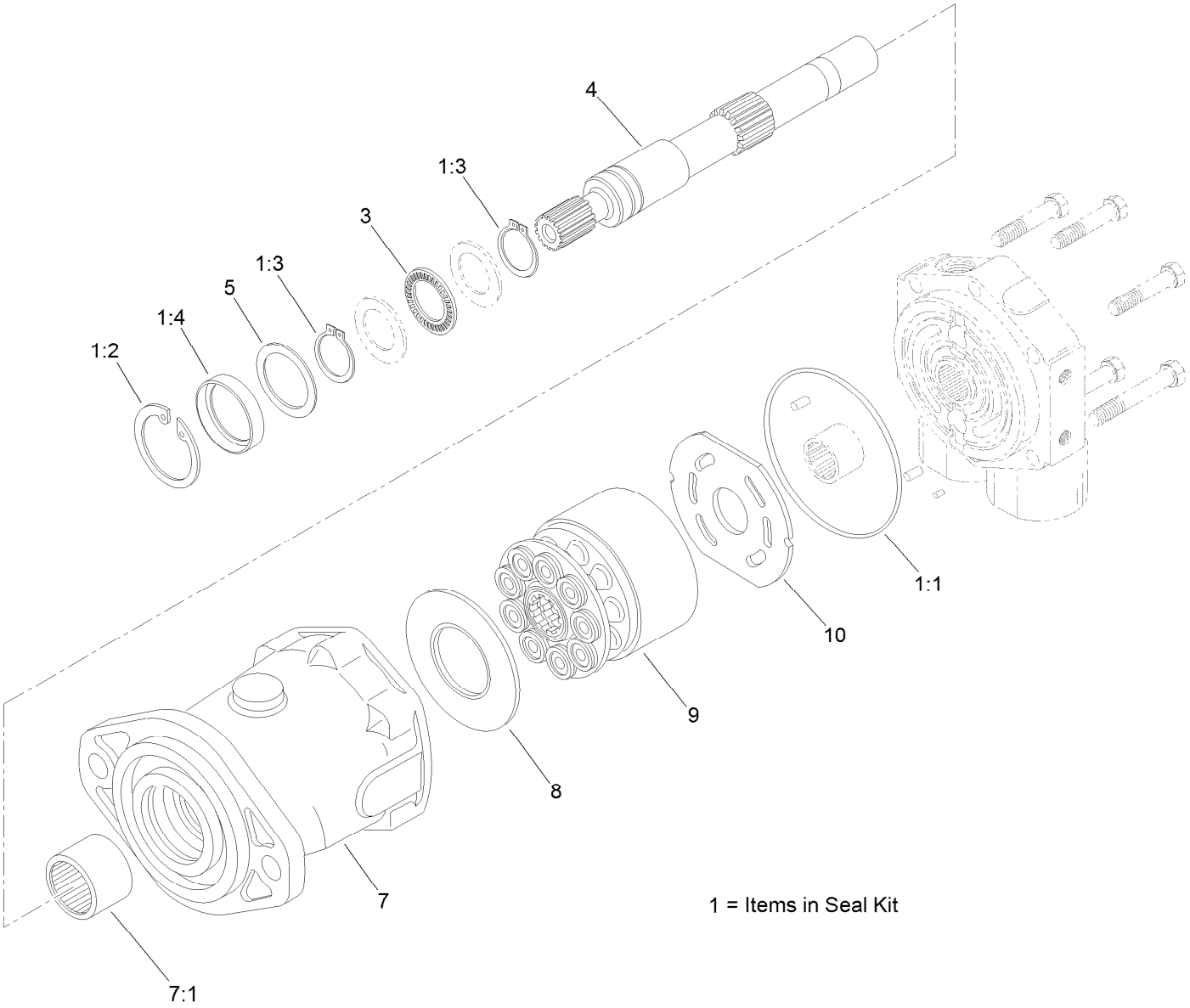

Hydraulic Motor Assembly No. 121-4325 (continued)

Ref.	Part Number	Qty.	Description
1	106-6876	1	Seal Kit
1:1		1	O-Ring ● ■
1:2	76-7010	1	Ring-Retaining ●
1:3	76-7000	2	Ring-Retaining ●
1:4		1	Seal-Shaft ● ■
3	76-6960	1	Bearing-Thrust
4	106-6874	1	Shaft-Drive
5	60-6240	1	Washer
7	105-2852	1	Housing ASM
7:1		1	Bearing-Needle ■
8	76-6970	1	Insert-Plate, Cam
9	106-6875	1	Rotating Kit
10	94-3003	1	Plate-Valve

● Not illustrated

■ Not serviced separately

Tower and Fuel Tank Assembly

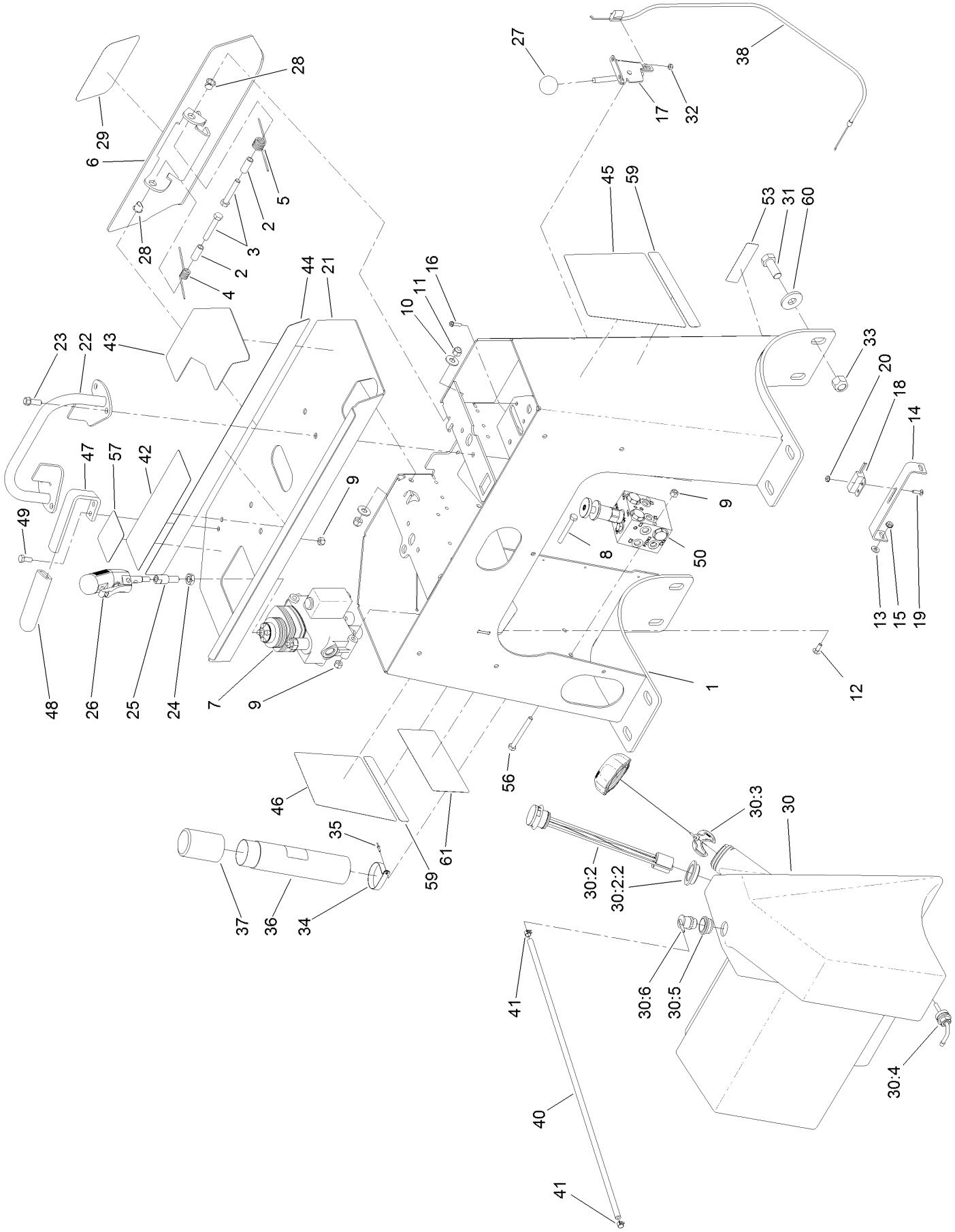

Tower and Fuel Tank Assembly (continued)

Ref.	Part Number	Qty.	Description
1	121-4568-01	1	Tower
2	114-1337	2	Spacer-Spring
3	323-11	2	Screw-HH
4	98-8425	1	Spring-Torsion, LH
5	98-8424	1	Spring-Torsion, RH
6	121-1110-03	1	Plate-Backup
7	119-4585	1	HYD Valve ASM
8	322-12	3	Screw-HH
9	3296-29	7	Nut-Lock, NI
10	3256-4	2	Washer-Flat
11	3296-39	2	Nut-Lock, NI
12	3229-1	2	Screw-CARR
13	3256-22	2	Washer-Flat
14	100-1263	1	Plate-Switch
15	32149-2	2	Nut-Keps
16	32105-13	2	Screw-HWH
17	108-9730	1	Lever-Control
18	100-1270	1	Switch-Proximity
19	3229-20	2	Screw-CARR
20	32149-7	2	Nut-Keps
21	131-0649	1	Panel-Control
22	106-7715	1	Bar-Reference
23	95-1726	4	Screw-Taptite
24	51-2070	1	Nut
25	119-5103	1	Adapter-Handle
26	119-4587	1	Two Button Handle Grip ASM
27	233-42	1	Knob
28	256-257	2	Bushing-Nyliner
29	105-1217	1	Decal
30	121-4350	1	Fuel Tank ASM
30:2	119-0509	1	Gauge ASM
30:2:2	119-0508	1	Seal
30:3	115-7788	1	Cap-Fuel
30:4	103-2605	1	Fitting-Fuel, Bulkhead
30:5	114-0284	1	Grommet
30:6	119-3547	1	Valve-Vent, Fuel
31	327-4	8	Screw-HH
32	3296-2	2	Nut-Lock, NI
33	3296-53	8	Nut-Lock, NI
34	2412-120	2	Clamp-R
35	3269-17	2	Rivet-Pop
36	104-7050	1	Tube-Manual
37	104-7048	1	Cap-Housing
38	115-1211	1	Cable-Control
40	110-3254	1	Hose-Fuel
41	2412-80	2	Clamp-Hose
42	119-4606	1	Decal-Warning
43	130-7580	1	Decal-Console, LH
44	121-4382	1	Decal-Console, RH
45	130-7575	1	Decal-Logo,LH
46	130-7576	1	Decal-Logo,RH
47	125-3570-03	1	Bar-Arm Rest
48	1-633268	1	Grip-Lever
49	322-3	2	Screw-HH
50	121-4466	1	Sweep Manifold ASM
53	133-8056	1	Decal-Arrester, Spark
56	322-14	2	Screw-HH
57	121-4402	1	Decal-Joystick
59	130-7577	2	Decal-Intellisweep
60	104-9216	8	Washer-Hardened
61	137-4869	1	Decal-Service

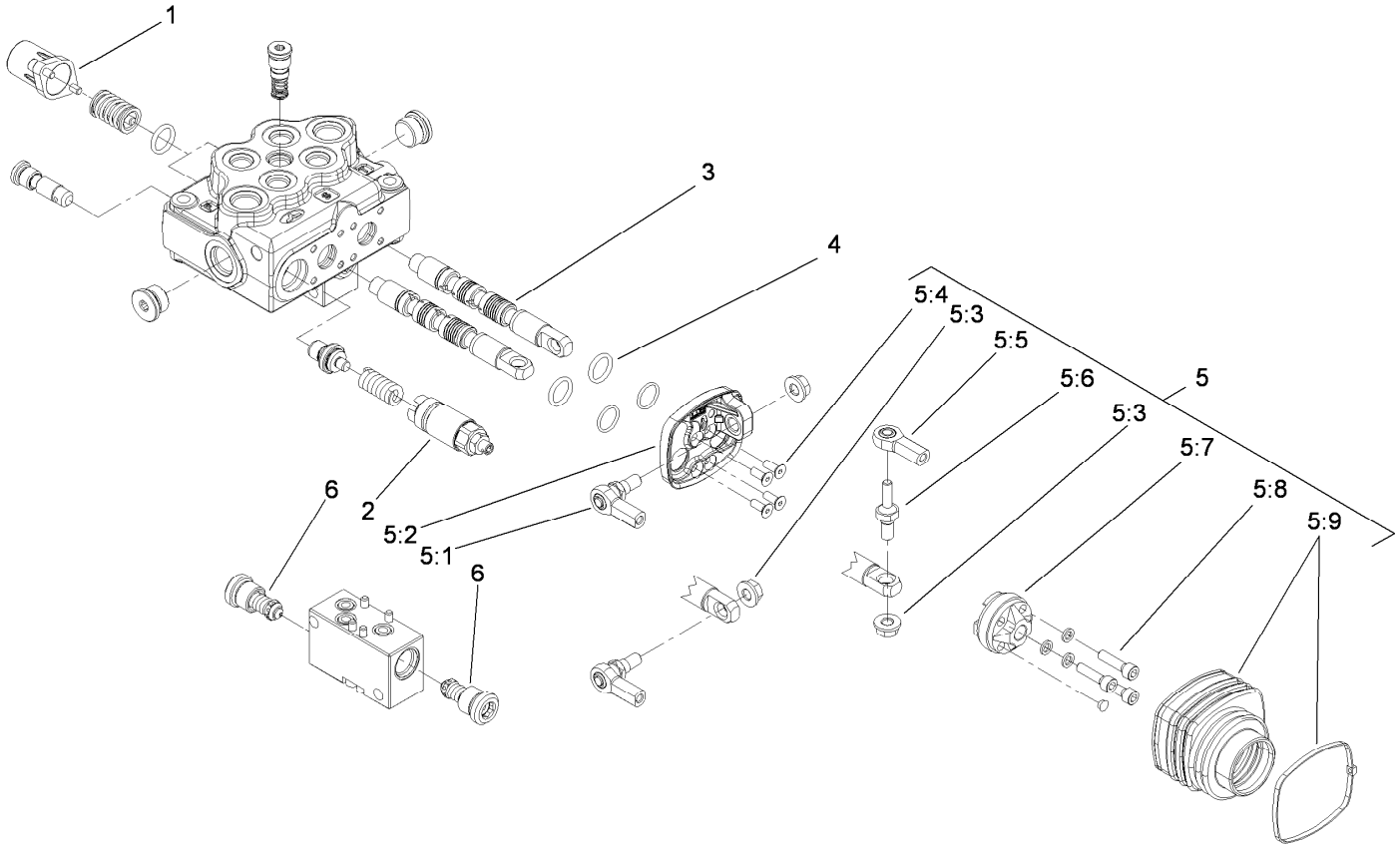

Control Valve Assembly No. 119-4585

Ref.	*Part Number*	*Qty.*	*Description*
1	100-8801	2	High Force Spring Kit
2	100-8805	1	Valve-Relief
3	114-8625	2	Valve-Spool
4	106-7719	4	Seal-Valve
5	119-4622	1	Joystick Kit
5:1	119-4623	2	Joint-Joystick
5:2	119-4624	1	Base-Joystick
5:3	117-1350	3	Nut-HF, Lock
5:4	119-4625	4	Screw-Joystick
5:5	119-4626	1	Joint-Joystick
5:6	119-4627	1	Pin-Spool
5:7	119-4628	1	Holder-Joystick
5:8	3273-42	3	Screw-HSH
5:9	119-4629	1	Boot-Joystick
6	119-4630	2	Valve Kit

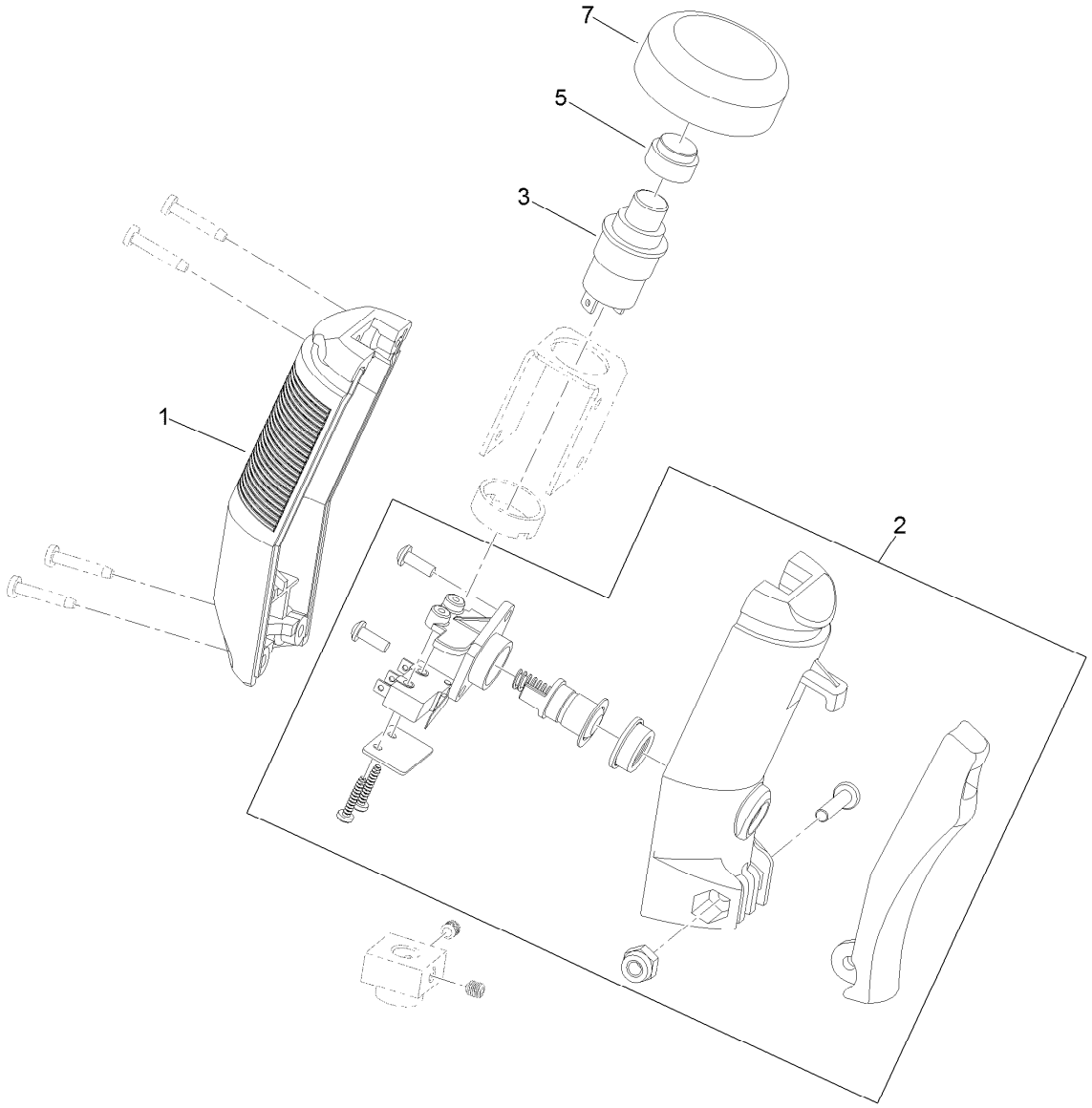

Two-Button Handle Grip Assembly No. 119-4587

Ref.	*Part Number*	*Qty.*	*Description*
1	119-4637	1	Halve-Handle
2	132-8660	1	Swtich Kit
3	119-4640	1	Button-Push, Top
5	119-4642	1	Button-Actuator
7	119-4641	1	Boot-Button

Cooler Assembly

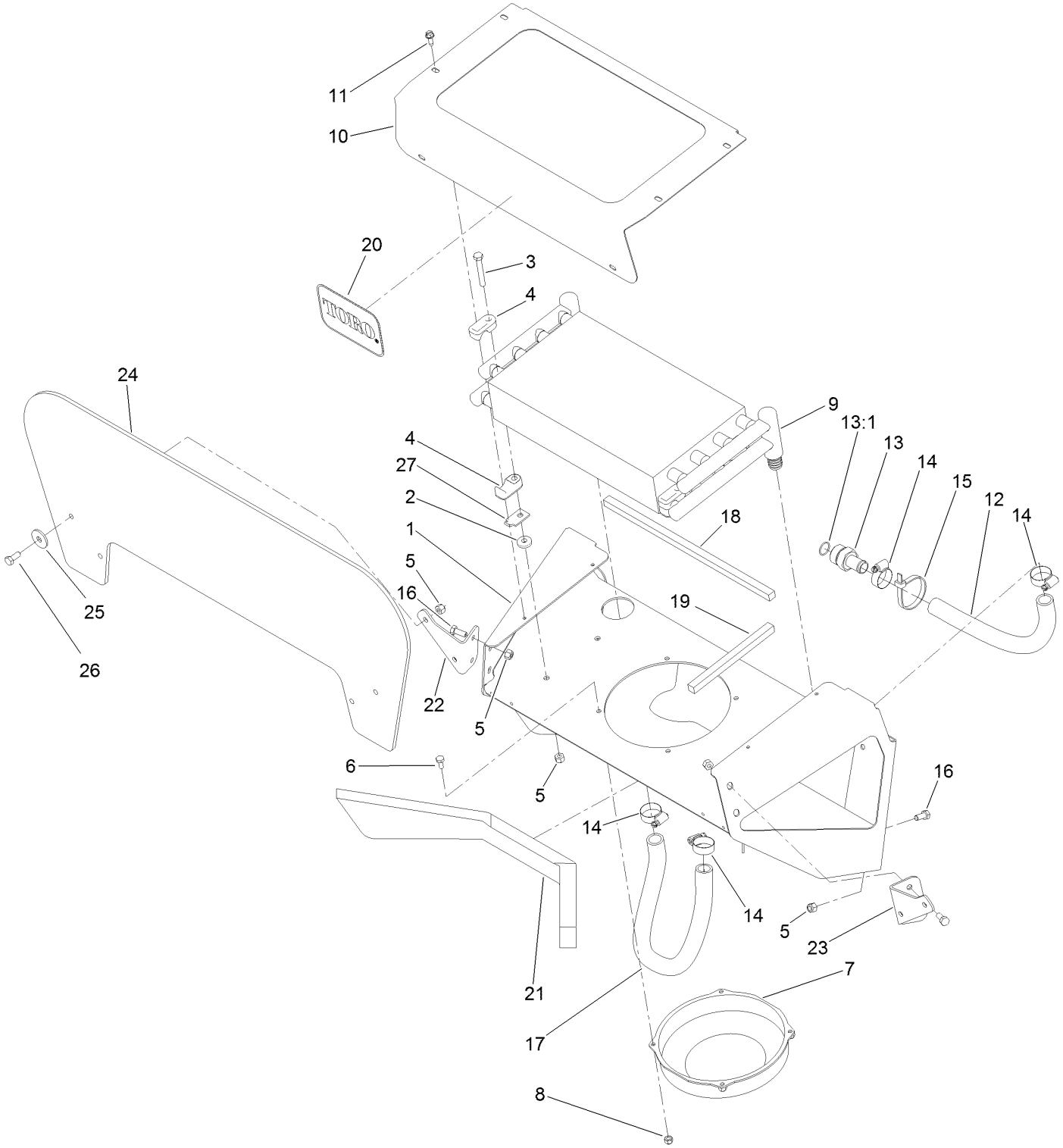

Cooler Assembly (continued)

Ref.	Part Number	Qty.	Description
1	131-0612-01	1	Mount-Cooler
2	105-5723	4	Spacer-Tube
3	322-11	4	Screw-HH
4	131-0733	8	Clamp
5	3296-29	16	Nut-Lock, NI
6	321-3	4	Screw-HH
7	120-7390	1	Fan
8	104-7201	4	Nut-HF, NI
9	117-6320	1	Cooler-Oil
10	125-0308-01	1	Cover-Cooler
11	32104-95	6	Screw-HWH
12	121-4537	1	Hose-HYD
13	107-8652	1	Fitting-Straight
13:1	237-58	1	O-Ring

Ref.	Part Number	Qty.	Description
14	2412-129	4	Clamp-Hose
15	3334-945	1	Tie-Cable
16	322-3	8	Screw-HH
17	125-0266	1	Hose-Return
18	125-0319	2	Foam-Seal
19	125-0324	2	Foam-Seal
20	104-3989	1	Decal
21	131-0731	1	Seal-Foam
22	125-0350-01	1	Bracket-Shield, RH
23	125-0351-01	1	Bracket-Shield, LH
24	125-0340	1	Shield-Chip
25	63-8410	4	Washer
26	322-4	4	Screw-HH
27	131-0642	4	Plate-Support, Clamp

Hydraulic Hose Routing Assembly

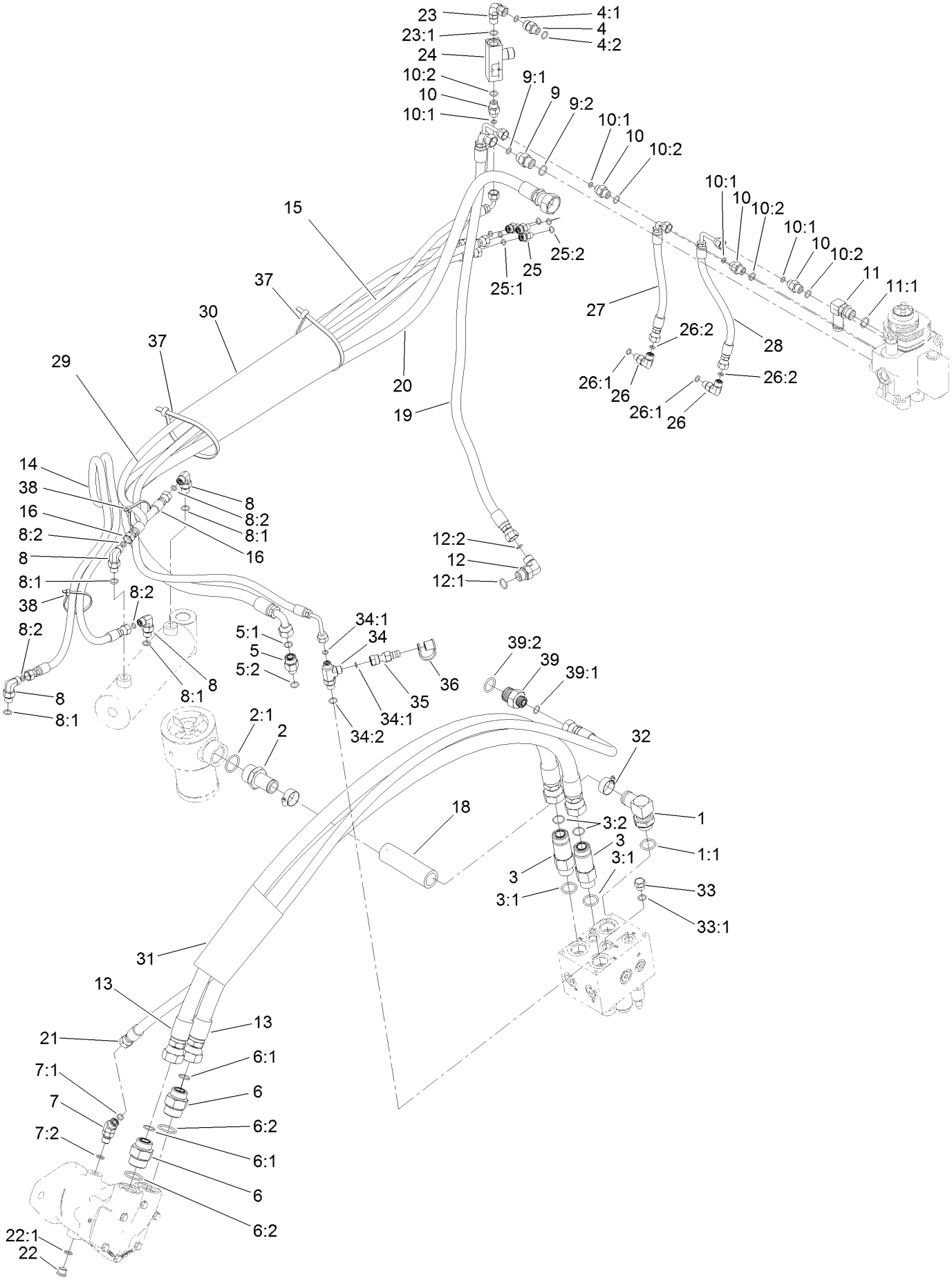

Hydraulic Hose Routing Assembly (continued)

Ref.	Part Number	Qty.	Description
1	100-4202	1	Fitting-90
1:1	237-81	1	O-Ring
2	354-78	1	Fitting-STR
2:1	237-146	1	O-Ring
3	92-6058	2	Fitting-STR
3:1	237-81	1	O-Ring
3:2	237-58	1	O-Ring
4	340-2	1	Fitting-Straight
4:1	237-22	1	O-Ring
4:2	237-42	1	O-Ring
5	340-5	1	Fitting-Straight
5:1	237-42	1	O-Ring
5:2	237-30	1	O-Ring
6	340-91	2	Fitting-STR
6:1	237-58	1	O-Ring
6:2	237-146	1	O-Ring
7	340-87	1	Fitting-Elbow, 45 DEG
7:1	237-22	1	O-Ring
7:2	237-42	1	O-Ring
8	340-82	4	Fitting-Elbow, 90 DEG
8:1	237-42	1	O-Ring
8:2	237-21	1	O-Ring
9	340-3	1	Fitting-Straight
9:1	237-22	1	O-Ring
9:2	237-79	1	O-Ring
10	340-1	4	Fitting-Straight
10:1	237-21	1	O-Ring
10:2	237-42	1	O-Ring
11	353-954	1	Fitting-Elbow, 90
11:1	237-79	1	O-Ring
12	340-18	1	Fitting-HYD, 90 DEG
12:1	237-79	1	O-Ring
12:2	237-22	1	O-Ring
13	121-4342	2	Hose-HYD
14	121-4345	1	Hose-HYD
15	121-4346	1	Hose-HYD
16	121-4347	2	Hose-HYD
18	121-4341	1	Hose-Return
19	121-1199	1	Hose-HYD
20	121-4344	1	Hose-HYD
21	130-7574	1	Hose-HYD
22	353-989	1	Plug-Hex, Hollow
22:1	237-42	1	O-Ring
23	340-110	1	Fitting-Swivel, 90 DEG
23:1	237-42	1	O-Ring
24	98-9742	1	Valve-Control, Flow
25	340-92	3	Fitting-Straight
25:1	237-78	1	O-Ring
25:2	237-21	1	O-Ring
26	340-132	2	Fitting-Elbow, 90 DEG
26:1	237-78	1	O-Ring
26:2	237-21	1	O-Ring
27	121-4455	1	Hose-HYD
28	121-4456	1	Hose-HYD
29	119-4601	1	Hose-HYD
30	121-4454	1	Sleeve-Protective
31	99-5648	1	Sleeve-Protective
32	2412-34	2	Clamp-Hose
33	353-508	1	Plug-HH
33:1	237-42	1	O-Ring
34	108-5688	1	Fitting-Tee
34:1	237-21	2	O-Ring
34:2	237-42	1	O-Ring
35	115-8886	1	Nipple-Test
36	354-79	1	Cap-Dust
37	3334-945	2	Tie-Cable
38	3290-379	2	Tie-Cable
39	100-4240	1	Fitting-STR
39:1	237-30	1	O-Ring
39:2	237-81	1	O-Ring

Electrical Assembly

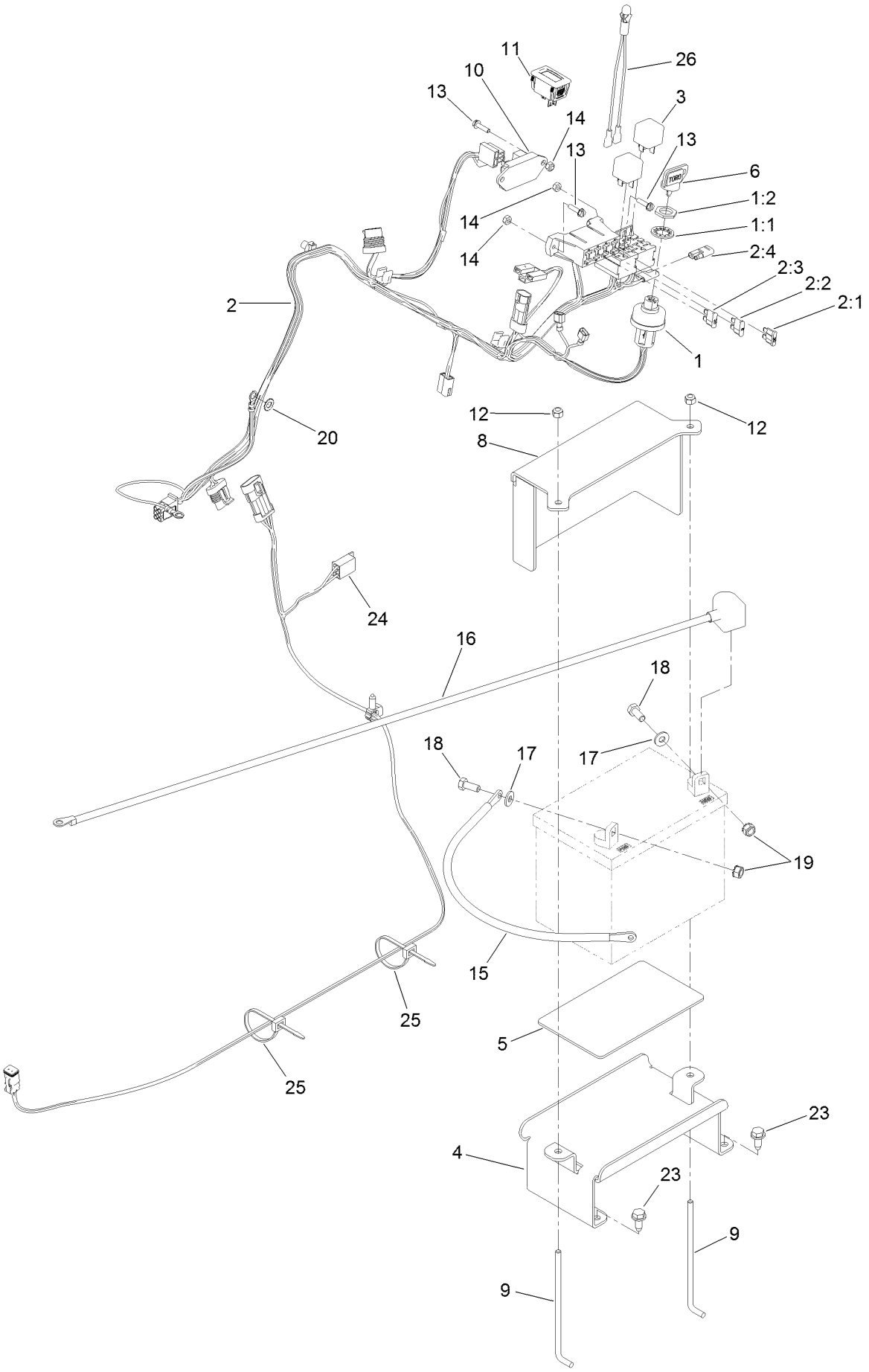

Electrical Assembly (continued)

Ref.	Part Number	Qty.	Description
1	111216	1	Ignition Switch ASM
1:1	9201604	1	Washer-Lock
1:2	101884	1	Nut
2	130-7572	1	Harness-Wire
2:1	109103	1	Fuse-Blade, 30 Amp
2:2	110928	1	Fuse-Blade, 5 Amp
2:3	109101	1	Fuse-Blade, 20 Amp
2:4	116-0053	1	Cap-Plug
3	98-7249	2	Relay
4	131-0727-01	1	Tray-Battery
5	62-4300	1	Pad-Skid, Anti
6	63-8360	1	Key-Ignition
8	131-0739-03	1	Cover-Battery
9	104-8567	2	Holdown-Battery
10	100-6170	1	Module-Delay
11	120-2244	1	Hourmeter
12	3296-42	2	Nut-Lock, NI
13	32105-13	5	Screw-HWH
14	3296-2	5	Nut-Lock, NI
15	131-0738	1	Cable-Battery, Positive
16	121-4437	1	Cable-Battery, Negative
17	3256-2	2	Washer-Flat
18	322-3	2	Screw-HH
19	32149-1	2	Nut-Keps
20	3255-8	1	Washer-Lock
23	32144-70	4	Screw-HWHTF
24	121-4319	1	Harness-Wire
25	3290-378	2	Tie-Cable
26	1-643267	1	Indicator-LED, Red

Notes:

Notes:

TORO®

Count on it.