Form No. 3328–649

Deluxe Seat Suspension Kit

Groundsmaster® 3000/4000 Series

Model No. 30396

Parts Catalog

Ordering Replacement Parts

To order replacement parts, please supply: the part number, the quantity, and the description of each part desired.

Understanding Reference Numbers

Each identified part in an illustration has a reference number. The reference number for a part also appears in the parts list, along with other information about the part.

This catalog uses two special reference number formats, one to indicate parts in a service assembly and another to indicate the quantity of a given part in an illustration.

Service Assembly Reference Numbers

Parts in service assemblies have reference numbers in the form **a:b.** The **a** represents the reference number of the entire service assembly and the **b** represents a sequential number unique to each part within the service assembly.

For example, a wheel assembly might be identified by reference number **6**, the tire by **6:1**, the valve by **6:2**, and the wheel by **6:3**. When you order the assembly identified by reference number 6, you receive all parts identified by reference numbers 6:1, 6:2, and 6:3. However, you may also order any part individually.

Reference numbers of this type appear in illustrations and in part lists.

Reference Numbers Indicating Quantity

In an illustration, if a reference number indicates more than one part, the reference number has the form **nX y.** The **n** represents the quantity of the part, the **X** is the multiplication symbol, and the **y** represents the reference number.

For example, in an illustration, the reference number **2X 37** means that two of the parts identified by reference number 37 are indicated.

© The TORO Company — 2002
All Rights Reserved

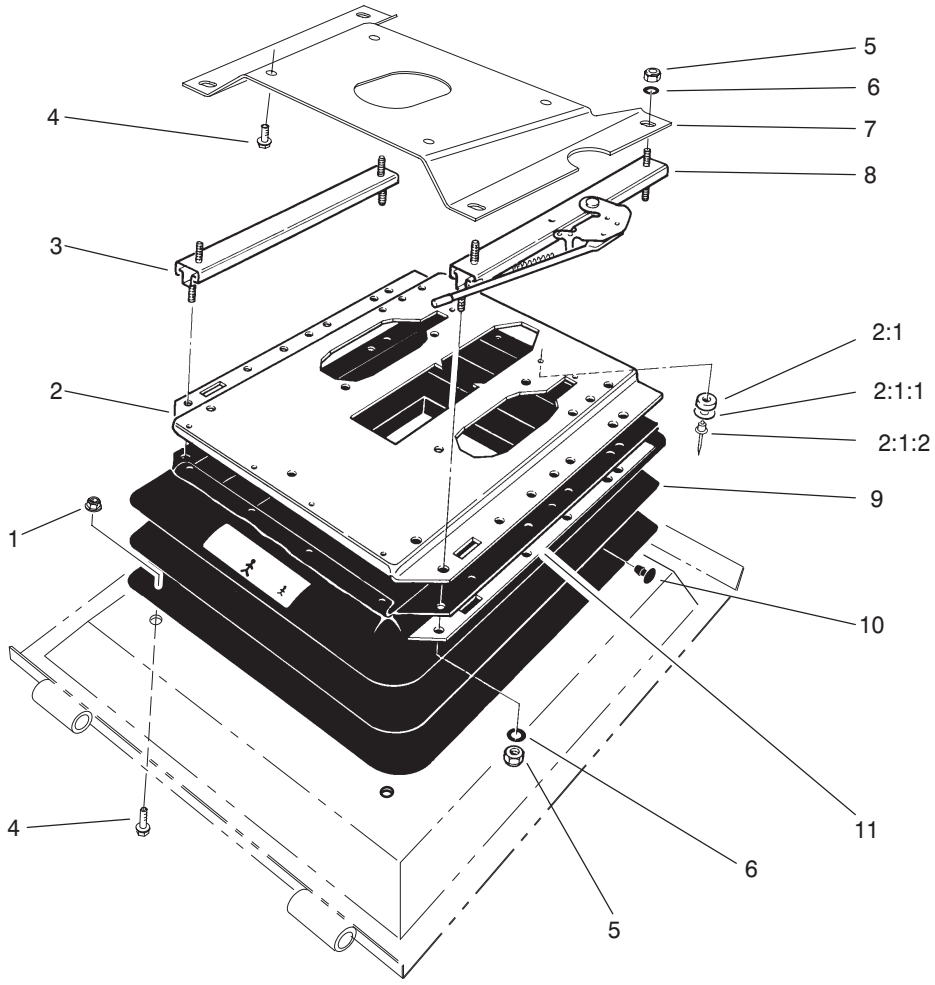

T–2264–2
Sheet No.:0

Suspension Kit Assembly

Ref. No.	Part No.	Qty.	Description
1	32128–44	4	Nut–Flange
2	71–2410	1	Plate–Upper Suspension
2:1	71–2400	2	Bumper Assembly
2:1:1	71–2380	2	Washer
2:1:2	71–2390	2	Rivet–Pop
3	66–8530	1	Adjuster
4	3234–17	8	Screw–HHF
5	3296–29	8	Nut–Lock
6	3256–23	8	Washer–Flat
7	93–5602	1	Bracket–Seat
8	66–8510	1	Adjuster and Handle Assembly
9	71–2420	1	Bellows–Rubber
10	39–5710	21	Plug
11	40–3890	2	Trim

Ref. No.	Part No.	Qty.	Description

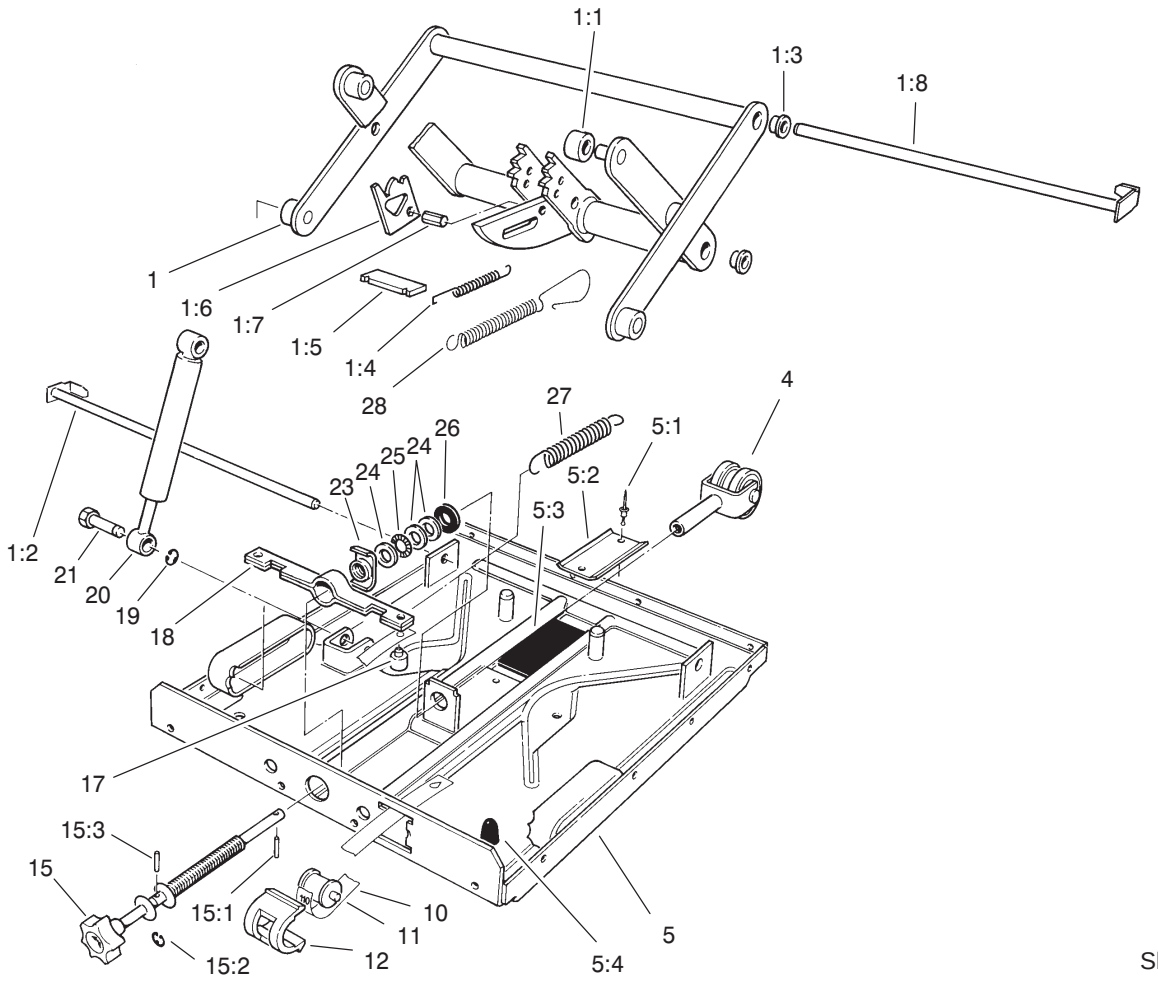

T–0483
Sheet No.:A1

Seat Suspension Assembly

Ref. No.	Part No.	Qty.	Description
1	71–2200	1	Swing Arm ASM
1:1	40–4010	4	Roller
1:2	71–2170	1	Pin
1:3	71–2180	4	Bearing
1:4	40–4350	2	Spring–Coil
1:5	40–4360	1	Plate
1:6	40–4380	2	Bracket–Release
1:7	40–4370	1	Bolt
1:8	71–2190	1	Pin
4	71–2290	1	Fork And Triple Bearing ASM
5	71–2310	1	Plate–Suspension, Lower
5:1	40–4090	2	Rivet
5:2	40–4080	1	U–Track
5:3	40–4120	1	Rubber
5:4	71–2300	2	Bumper–Rubber
10	71–2280	1	Band–Indicator, Weight
11	40–4150	1	Roller
12	40–4160	1	Guide–Sleeve
15	71–2240	1	Knob ASM
15:1	71–2210	1	Pin
15:2	71–2230	1	Ring–Snap
15:3	71–2220	1	Pin
17	40–4230	1	Plug

Ref. No.	Part No.	Qty.	Description
18	71–2250	1	Bracket–Spring
19	71–2330	2	Ring–Snap
20	71–2340	1	Absorber–Shock
21	71–2320	2	Pin
23	71–2270	1	Nut–Special
24	40–4070	3	Washer
25	40–4310	1	Bearing–Thrust, Needle
26	40–4060	1	Washer–Rubber
27	71–2260	2	Spring
28	40–4340	1	Spring–Coil


TORO®