Form No. 3328-674

TORO®

Super Recycler®

Walk Power Lawn Mower

Model No. 20033—Serial No. 230000001 and Up

Operator's Manual

Para obtener una versión gratis de este manual en español, escriba a la dirección indicada más abajo. Asegúrese de indicar el modelo y el número de serie de su producto.

Pour obtenir gratuitement une version en français de ce manuel, écrivez à l'adresse ci–dessous. N'oubliez pas d'indiquer les numéros de modèle et de série de votre produit.

The Toro Company, Attn: Parts Dept., 8111 Lyndale Ave S, Bloomington, MN 55420-1196.

Domestic English (EN)

Warning

CALIFORNIA

Proposition 65 Warning

The engine exhaust from this product contains chemicals known to the State of California to cause cancer, birth defects, or other reproductive harm.

Important This engine is not equipped with a spark arrester muffler. It is a violation of California Public Resource Code Section 4442 to use or operate this engine on any forest-covered, brush-covered or grass-covered land. Other states or federal areas may have similar laws.

This spark ignition system complies with Canadian ICES-002.

Ce système d'allumage par étincelle de véhicule est conforme à la norme NMB-002 du Canada.

The enclosed Engine Owner's Manual is supplied for information regarding The U.S. Environmental Protection Agency (EPA) and the California Emission Control Regulation of emission systems, maintenance and warranty. See the emission label(s) on the engine.

Keep this engine Owner's Manual with your unit. Should this engine Owner's Manual become damaged or illegible, replace immediately. Replacements may be ordered through the engine manufacturer.

Contents

	Page
Introduction	2
Safety	3
General Lawn Mower Safety	3
Safety and Instruction Decals	5
Setup	6
Installing the Handle	6
Installing the Starter Rope	6
Before Starting	7
Filling the Crankcase with Oil	7
Filling the Fuel Tank with Gasoline	7
Reviewing the Maintenance Schedule	8
Operation	8
Controls	8
Starting the Engine	8
Stopping the Engine	9
Adjusting the Cutting Height	9
Operating Tips	9
Maintenance	11
Recommended Maintenance Schedule	11
Checking the Engine Oil Level	11
Cleaning under the Housing	12
Replacing the Air Filter	12
Servicing the Spark Plug	13
Changing the Engine Oil	13
Maintaining the Blade	13
Cleaning the Cooling System	15
Emptying the Fuel Tank	15
Folding the Handle	15
Storage	16
Preparing the Fuel System	16
Preparing the Engine	16
General Information	16
Removing the Lawn Mower from Storage	16
Accessories	17
Troubleshooting	18
The Toro Starting Guarantee	22
The Toro Total Coverage Guarantee	24

Introduction

Read this manual carefully to learn how to operate and maintain your product properly. The information in this manual can help you and others avoid injury and product damage. Although Toro designs and produces safe products, you are responsible for operating the product properly and safely.

Whenever you need service, genuine Toro parts, or additional information, contact an Authorized Service Dealer or Toro Customer Service and have the model and serial numbers of your product ready. Figure 1 illustrates the location of the model and serial numbers on the product.

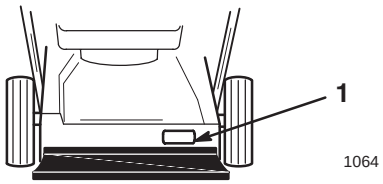

Figure 1

1. Location of the model and serial numbers

Write the product model and serial numbers in the space below:

Model No. _____

Serial No. _____

© 2002 by The Toro Company
8111 Lyndale Avenue South
Bloomington, MN 55420-1196

All Rights Reserved

Printed in the USA

This manual identifies potential hazards and has special safety messages that help you and others avoid personal injury and even death. ***Danger***, ***Warning***, and ***Caution*** are signal words used to identify the level of hazard. However, regardless of the hazard, be extremely careful.

Danger signals an extreme hazard that **will** cause serious injury or death if you do not follow the recommended precautions.

Warning signals a hazard that **may** cause serious injury or death if you do not follow the recommended precautions.

Caution signals a hazard that may cause minor or moderate injury if you do not follow the recommended precautions.

This manual uses 2 other words to highlight information. **Important** calls attention to special mechanical information and **Note:** emphasizes general information worthy of special attention.

Safety

This lawn mower meets or exceeds the CPSC blade safety requirements for walk-behind rotary lawn mowers and the B71.1 specifications of the American National Standards Institute in effect at the time of production.

Toro designed and tested this lawn mower to offer reasonably safe service; however, **failure to comply with the following instructions may result in personal injury.**

Warning

Engine exhaust contains carbon monoxide, an odorless, deadly poison that can kill you.

Do not run the engine indoors or in an enclosed area.

To ensure maximum safety, best performance, and to gain knowledge of the product, it is essential that you and any other operator of the lawn mower read and understand the contents of this manual before operating the lawn mower.

⚠ This is the safety alert symbol. It is used to alert you to potential personal injury hazards. Obey all safety messages that follow this symbol to avoid possible injury or death.

Improperly using or maintaining this lawn mower can result in injury. To reduce the potential for injury, comply with these safety instructions.

General Lawn Mower Safety

The following instructions have been adapted from the ANSI/OPEI standard B71.1—1998 and ISO standard 5395:1990(E). Information or terminology specific to Toro lawn mowers is enclosed in parenthesis.

This lawn mower is capable of amputating hands and feet and of throwing objects. Failure to observe the following safety instructions could result in serious injury or death.

Training

- Read this operator's manual carefully. Be thoroughly familiar with the controls and the proper use of the lawn mower before starting it.
- Never allow children to operate the lawn mower. Local regulations may restrict the age of the operator.
- Never allow adults unfamiliar with these instructions to operate the lawn mower.
- Never mow while people (especially children) or pets are nearby. Stop the lawn mower if anyone enters the area.
- Tragic accidents can occur if the operator is not alert to the presence of children. Children are often attracted to the lawn mower and the mowing activity. Never assume that children will remain where you last saw them.
- Keep children out of the mowing area and under the watchful care of a responsible adult.
- Be alert and turn the lawn mower off if children enter the area.
- Use extra care when approaching blind corners, shrubs, trees, or other objects that may obscure vision.
- Keep in mind that the operator or user is responsible for accidents or hazards occurring to other people or their property.
- See the manufacturer's instructions for proper operation and installation of accessories. Use only the accessories that are approved by the manufacturer.

Preparation

- Thoroughly inspect the area where you will use the lawn mower, and remove all stones, sticks, wires, bones, and other foreign objects.
- While mowing, always wear substantial footwear and long trousers.
- Do not operate the lawn mower when barefoot or wearing open sandals.
- Always wear safety goggles or safety glasses with side shields when operating the lawn mower.

- Warning: Gasoline is highly flammable. Take the following precautions:
  - Store fuel in containers specifically designed for this purpose.
  - Refuel outdoors only and do not smoke while refuelling.
  - Add fuel before starting the engine. Never remove the cap of the fuel tank or add gasoline while the engine is running or when the engine is hot.
  - If gasoline is spilled, do not attempt to start the engine. Move the lawn mower away from the area of spillage to avoid creating any source of ignition until the gasoline vapors have dissipated.
  - Replace all fuel tank and container caps securely.
  - If you must drain the fuel from the fuel tank, do it outdoors.
- Replace faulty mufflers.
- Before using, always visually inspect the blades, blade bolts, and cutter assembly for wear or damage. Replace worn or damaged blades and bolts in sets to preserve balance.
- On multibladed lawn mowers, use care as rotating one blade can cause the other blades to rotate.

Operation

- Do not operate the engine in a confined space where dangerous carbon monoxide fumes can collect.
- Mow only in daylight or in good artificial light.
- Always be sure of your footing on slopes.
- Walk; never run.
- Keep a firm hold on the handle.
- For wheeled rotary lawn mowers, mow across the face of slopes, never up and down.
- Exercise extreme caution when changing the direction on slopes.
- Do not mow excessively steep slopes.
- Use extreme caution when reversing or pulling the lawn mower toward you.
- Before and while moving backward, look behind and down for small children.
- Stop the blade(s) if you must tilt the lawn mower for transportation when crossing surfaces other than grass and when transporting the lawn mower to and from the area to be mowed.
- Never operate the lawn mower with damaged or missing guards or shields, or without safety devices (such as deflectors and grass catchers) in place.
- Do not change the speed settings on the engine.
- Disengage all blade and drive clutches before starting the engine.
- Start the engine carefully according to instructions and with feet well away from the blade(s).
- Do not tilt the lawn mower when starting the engine, unless you must tilt the lawn mower to start it. In this case, do not tilt it more than absolutely necessary and lift only the part which is away from the operator.
- Do not start the engine when standing in front of the discharge chute.
- Do not put your hands or feet near or under rotating parts. Keep clear of the discharge opening at all times.
- Never pick up or carry a lawn mower while the engine is running.
- Stop the engine and disconnect the spark-plug wire:
  - before clearing blockages or unclogging the chute;
  - before checking, cleaning, or working on the lawn mower;
  - after striking a foreign object. Inspect the lawn mower for damage and make repairs before starting and operating the lawn mower; and
  - if the lawn mower starts to vibrate abnormally (check it immediately).
- Stop the engine:
  - whenever you leave the lawn mower; and
  - before refuelling.
- Reduce the throttle setting during engine run-out and, if the engine has a shutoff valve, turn the fuel off after mowing.
- Stop the blade(s) when crossing gravel drives, walks, or roads.
- Shut the engine off and wait until the blade comes to a complete stop before removing the grass catcher.
- Do not operate the lawn mower while under the influence of alcohol or drugs.
- If the lawn mower should start to vibrate abnormally, stop the engine and check immediately for the cause. Vibration is generally a warning of trouble.

Slopes are a major factor related to slip and fall accidents which can result in a severe injury. If you feel uneasy on a slope, do not mow it.

- Watch for holes, ruts, or bumps. Tall grass can hide obstacles.
- Do not mow near drop-offs, ditches, or embankments. You could lose your footing or balance.
- Do not mow on wet grass. Reduced footing could cause slipping.

Maintenance and Storage

- Keep all nuts, bolts (especially blade attachment bolts), and screws tight to ensure that the lawn mower is in safe working condition.
- Never store the lawn mower with gasoline in the tank inside a building where fumes may reach an open flame or spark.
- Allow the engine to cool before storing the lawn mower in any enclosure.
- To reduce the fire hazard, keep the engine, muffler, battery compartment, and gasoline storage area free of grass, leaves, or excessive grease.
- Check the grass catcher frequently for wear or deterioration.
- Replace worn or damaged parts.
- Use extra care when handling gasoline; gasoline vapors are explosive.
- Never tamper with safety devices. Check their proper operation regularly.
- Keep the lawn mower free of grass, leaves, or other debris buildup. Clean up any oil or fuel that spills.
- Stop and inspect the lawn mower if you strike an object. Repair the lawn mower, if necessary, before starting the engine.
- Never attempt to make wheel height adjustments while the engine is running.
- Grass catcher components are subject to wear, damage, and deterioration, which could expose moving parts or allow objects to be thrown. Frequently check the components and replace them with the manufacturer's recommended parts when necessary.
- Lawn mower blades are sharp and can cut. Wrap the blade(s) or wear gloves, and use extra caution when servicing them.
- Do not change the speed settings on the engine.
- If you must drain the fuel from the fuel tank, do it outdoors.
- To ensure the best performance and safety, purchase only genuine Toro replacement parts and accessories.
- Maintain or replace safety and instruction decals when necessary.

Safety and Instruction Decals

Safety decals and instructions are easily visible to the operator and are located near any area of potential danger. Replace any decal that is damaged or lost.



43-8480

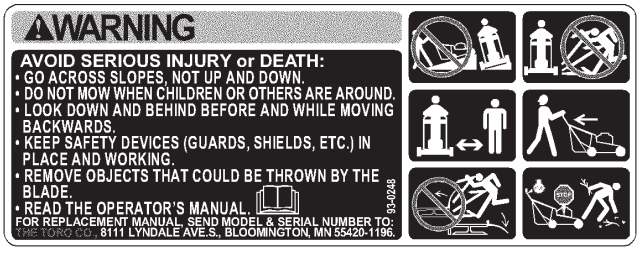

93-0248



99-6018

Setup

Note: Determine the left and right sides of the machine from the normal operating position.

Installing the Handle

Warning

Folding or unfolding the handle improperly can pinch, stretch, or damage one or more of the cables. Any pinched, stretched, or damaged cable may cause an operational failure that results in an unsafe operating condition.

- **Do not pinch, stretch, or damage the cables.**
- **Handle the cables with care when folding or unfolding the handle.**
- **Do not use the lawn mower if one or more of the cables are pinched, stretched, or damaged. Contact an Authorized Service Dealer.**

1. Align the upper and lower handle sections, and remove the packing filler between them with a pliers.

2. Remove the left knob and bolt (Fig. 2).

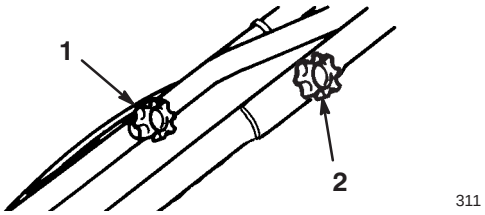

Figure 2

1. Left handle knob (before moving it on the inside)
2. Right handle knob

3. Install the left knob on the **inside** of the handle (Fig. 2).

4. Tighten both handle knobs.

5. Move the handle support brackets slightly outward so that they will not be in the way when you move the handle backward into the operating position (Fig. 3).

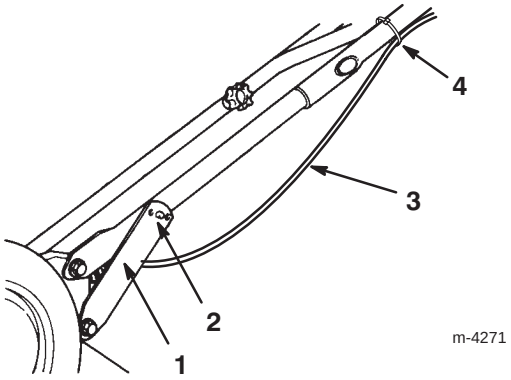

Figure 3

1. Support bracket
2. Handle stud
3. Control cable
4. Cable tie

6. Move the handle backward.

7. Move the support brackets inward while you position the handle studs into the center hole of the brackets (Fig. 3).

Note: If the handle height is not satisfactory, adjust it by placing the handle stud into a different hole.

8. Secure the cable to the upper handle section with a cable tie (Fig. 3).

Installing the Starter Rope

Pull the starter rope through the rope guide on the handle (Fig. 4).

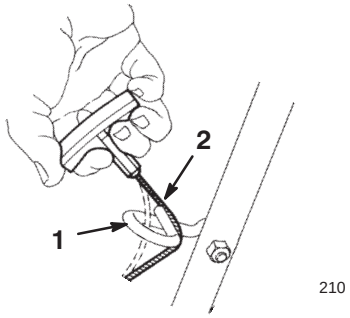

Figure 4

1. Rope guide
2. Starter rope

Before Starting

Filling the Crankcase with Oil

The crankcase can hold 20 ounces (0.59 liters) of oil. Use only high-quality, SAE 30 weight detergent oil that has the American Petroleum Institute (API) service classification SF, SG, SH, or SJ.

Before each use, ensure that the oil level is between the Add and the Full marks on the dipstick (Fig. 5).

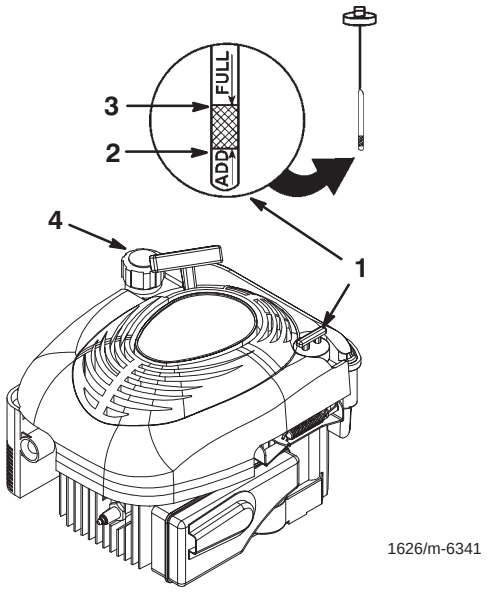

Figure 5

1. Dipstick
2. Add mark
3. Full mark
4. Fuel tank cap

To add oil:

1. Move the lawn mower to a level surface.
2. Clean around the dipstick (Fig. 5).
3. Remove the dipstick by rotating the cap counterclockwise and pulling it out.
4. Wipe the dipstick clean with a clean cloth.
5. Fully insert the dipstick into the filler neck, then remove it.

Note: To ensure an accurate oil level reading, you must fully install the dipstick.

6. Read the oil level on the dipstick (Fig. 5).
7. If the oil level reading is below the Add mark on the dipstick, **slowly** pour only enough oil into the filler hole to raise the oil level to the Full mark on the dipstick.

Important Do not overfill the crankcase with oil and run the engine; engine damage will result. Drain the excess oil until the oil level on the dipstick reads Full.

8. Insert the dipstick into the filler neck and rotate the cap clockwise until it is tight.

Filling the Fuel Tank with Gasoline

For best results, use clean, fresh, lead-free gasoline with an octane rating of 87 or higher. To ensure freshness, purchase only the quantity of gasoline that you expect to use in 30 days. Unleaded gasoline burns cleaner, extends engine life, and promotes good starting. You may use leaded gasoline if unleaded gasoline is not available.

Important Do not add oil to the gasoline.

Important Do not use methanol, gasoline containing methanol, gasohol containing more than 10% ethanol, premium gasoline, or white gas. Using these fuels can damage the engine's fuel system.

Important Do not use gasoline that is more than 30 days old.

Danger

In certain conditions, gasoline is extremely flammable and highly explosive. A fire or explosion from gasoline can burn you and others and can damage property.

- **Fill the fuel tank outdoors, in an open area, and when the engine is cold. Wipe up any gasoline that spills.**
- **Do not fill the fuel tank completely full. Add gasoline to the fuel tank until the level is 1/4 to 1/2 in. (6 to 13 mm) below the bottom of the filler neck. This empty space in the tank allows the gasoline to expand.**
- **Never smoke when handling gasoline, and stay away from an open flame or where a spark may ignite the gasoline fumes.**
- **Store gasoline in an approved fuel container and keep it out of the reach of children.**
- **Never buy more than a 30-day supply of gasoline.**

Danger

When fueling, under certain circumstances, a static charge can develop, igniting the gasoline. A fire or explosion from gasoline can burn you and others and damage property.

- **Always place gasoline containers on the ground and away from your vehicle before filling.**
- **Do not fill gasoline containers inside a vehicle or on a truck or trailer bed because interior carpets or plastic truck bed liners may insulate the container and slow the loss of any static charge.**
- **When practical, remove gasoline-powered equipment from the truck or trailer and refuel the equipment with its wheels on the round.**
- **If this is not possible, then refuel such equipment on a truck or trailer from a portable container, not from a gasoline dispenser nozzle.**
- **If you must use a gasoline dispenser nozzle, keep the nozzle in contact with the rim of the fuel tank or container opening at all times until fueling is complete.**

Use a fuel stabilizer/conditioner regularly during operation and storage. A stabilizer/conditioner cleans the engine during operation and prevents gum-like varnish deposits from forming in the engine during periods of storage.

Important Do not use fuel additives other than a fuel stabilizer/conditioner. Do not use fuel stabilizers with an alcohol base such as ethanol, methanol, or isopropanol.

1. Clean around the fuel tank cap (Fig. 5).
2. Remove the cap from the tank.
3. Fill the fuel tank with unleaded gasoline to within 1/4 to 1/2 in. (6 to 13 mm) from the top of the tank. **Do not fill into the filler neck.**
4. Install the fuel tank cap and wipe up any spilled gasoline.

Reviewing the Maintenance Schedule

Review the Recommended Maintenance Schedule on page 11. You may need to perform one or more additional procedures before or soon after you begin operating the lawn mower.

Operation

Note: Determine the left and right sides of the machine from the normal operating position.

Each time before you mow, make sure that the self-propel drive and the blade control bail operate properly. When you release the blade control bail, the engine and the blade should stop. If they do not, contact an Authorized Service Dealer.

Controls

The starter handle and the blade control bail are on the upper handle as shown in Figure 6.

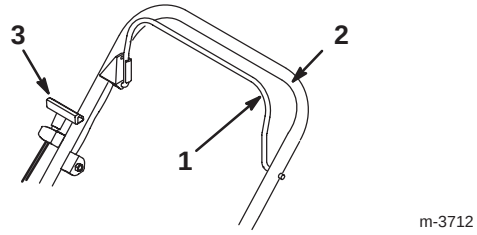

Figure 6

1. Blade control bail
2. Upper handle
3. Starter handle

Starting the Engine

1. Connect the wire to the spark plug (Fig. 7).

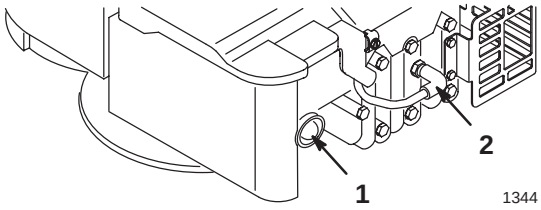

Figure 7

1. Primer
2. Spark-plug wire

2. Push in the primer 3 times, waiting one second between each push (Fig. 7).

Note: If the temperature is 55°F (13°C) or below, push in the primer 5 times, waiting one second between each push.

Note: Do not use the primer to start a warm engine after a brief shutdown. However, cool weather may require you to prime the engine again.

3. Hold the blade control bail against the upper handle (Fig. 6).

4. Pull the starter handle lightly until you feel resistance, then pull it sharply (Fig. 6). Allow the rope return to the handle slowly.

Note: Allow the engine to warm up for at least one minute; longer in cooler temperatures.

Note: If the engine fails to start after 3 attempts, repeat steps 2 through 4.

Stopping the Engine

Release the blade control bail. Both the engine and the blade should stop. If they do not stop properly, contact an Authorized Service Dealer.

Adjusting the Cutting Height

You can adjust each wheel individually with the wheel height adjustment lever. Cutting heights are 1 inch (25 mm); 1-1/2 inches (38 mm); 2 inches (51 mm); 2-1/2 inches (64 mm); and 3 inches (76 mm).

Danger

Adjusting the cutting height levers could bring your hands into contact with a moving blade and result in serious injury.

- **Stop the engine and wait for all movement to stop before adjusting the cutting height.**
- **Do not put fingers under the housing when adjusting the cutting height.**

1. To change the cutting height, pull the cutting height lever toward the wheel and move it to the desired position (Fig. 8).

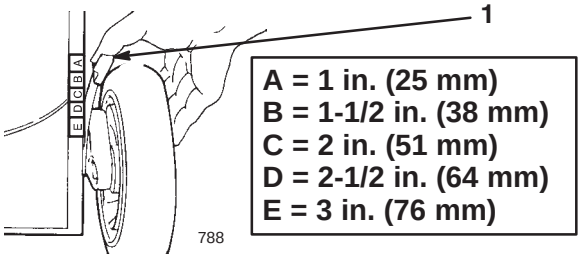

Figure 8

1. Cutting height lever

2. Release the cutting height lever and seat it securely in the notch.

Note: Set all 4 wheels at the same height.

Operating Tips

- Review the safety instructions and read this manual carefully before operating the lawn mower.
- Clear the area of sticks, stones, wire, branches, and other debris that the blade could hit and throw.
- Keep everyone, especially children and pets, away from the area of operation.
- Avoid striking trees, walls, curbs, or other solid objects. Never deliberately mow over any object.
- If the lawn mower strikes an object or starts to vibrate, immediately stop the engine, disconnect the wire from the spark plug, and examine the lawn mower for damage.
- Maintain a **sharp blade** throughout the cutting season. Periodically file down nicks on the blade.
- Replace the blade when necessary with an original Toro replacement blade.
- Mow only dry grass or leaves. Wet grass and leaves tend to clump on the yard and can cause the lawn mower to plug or the engine to stall.

Warning

Wet grass or leaves can cause you to slip and contact the blade, resulting in serious injury.

Mow only in dry conditions.

- Clean under the housing after each mowing. See Cleaning under the Housing on page 12.
- Keep the engine in good running condition.
- Set the engine speed to the fastest position for the best cutting results.

Warning

Operating a lawn mower with its engine running at a speed greater than the factory setting can cause the lawn mower to throw a part of the blade or engine into the operator's or bystander's area and result in serious personal injury or death.

- **Do not change the engine speed setting.**
- **If you suspect the engine speed is faster than normal, contact an Authorized Service Dealer.**

- Clean the air filter frequently. Mulching stirs up more clippings and dust which clogs the air filter and reduces engine performance.

Cutting Grass

- Grass grows at different rates at different times of the year. In the summer heat, it is best to cut grass at the 2 inch (51 mm), 2-1/2 inch (64 mm), or 3 inch (76 mm) cutting height settings. Cut only about a third of the grass blade at a time. Do not cut below the 2-inch (51 mm) setting unless the grass is sparse or it is late fall when grass growth begins to slow down.
- When cutting grass over 6 inches (15 cm) tall, first mow at the highest cutting height setting and walk slower; then mow again at a lower setting for the best lawn appearance. If the grass is too long, the lawn mower may plug and cause the engine to stall.
- Alternate the mowing direction. This helps disperse the clippings over the lawn for even fertilization.

If the finished lawn appearance is unsatisfactory, try one or more of the following:

- Sharpen the blade.
- Walk at a slower pace while mowing.
- Raise the cutting height on your lawn mower.
- Cut the grass more frequently.
- Overlap cutting swaths instead of cutting a full swath with each pass.
- Set the cutting height on the front wheels one notch lower than the rear wheels. For example, set the front wheels at 2 inches (51 mm) and the rear wheels at 2-1/2 inches (64 mm).

Cutting Leaves

- After cutting the lawn, ensure that half of the lawn shows through the cut leaf cover. You may need to make more than one pass over the leaves.
- For light leaf coverage, set all the wheels at the same cutting height setting.
- If there are more than 5 inches (12.7 cm) of leaves on the lawn, set the front cutting height one or 2 notches higher than the rear cutting height. This makes it easier to feed the leaves under the housing.
- Slow down your mowing speed if the lawn mower does not cut the leaves finely enough.
- If you mow over oak leaves, you can add lime to the grass in the spring to reduce the acidity of the oak leaves.

Maintenance

Note: Determine the left and right sides of the machine from the normal operating position.

Recommended Maintenance Schedule

Maintenance Service Interval	Maintenance Procedure
Each Use	• Check the engine oil level. Refer to Checking the Engine Oil Level on page 11. • Check the stopping time of the blade brake. The blade must stop within 3 seconds of releasing the bail; if it does not, contact an Authorized Service Dealer for repair. • Remove grass clippings and dirt from under the housing. Refer to Cleaning under the Housing on page 12.
5 Hours	• Check the blade and the engine mounting fasteners. Tighten them if they are loose.
25 Hours	• Replace the air filter; replace it more frequently in dusty or dirty operating conditions. Refer to Replacing the Air Filter on page 12. • Inspect the spark plug and replace it if necessary. Refer to Servicing the Spark Plug on page 13.
50 Hours	• Change the engine oil.[1,2] Refer to Changing the Engine Oil on page 13. • Sharpen or replace the blade; maintain it more frequently if the edge dulls quickly in rough or in sandy conditions. Refer to Maintaining the Blade on page 13. • Check for leaks in the fuel system and/or a deteriorating fuel hose. Replace parts if necessary.
100 Hours	• Clean the cooling system. Refer to Cleaning the Cooling System on page 15.
Storage	• Empty the fuel tank before repairs as directed or before storage. Refer to Emptying the Fuel Tank on page 15.

[1]Change the engine oil after the first 5 operating hours.

[2]Change the engine oil after every 25 operating hours in dusty conditions or in high temperatures.

Important Refer to your engine operator's manual for additional maintenance procedures.

Caution

If you leave the wire on the spark plug, someone could accidently start the engine and seriously injure you or other bystanders.

Disconnect the wire from the spark plug before you do any maintenance. Set the wire aside so that it does not accidentally contact the spark plug.

Checking the Engine Oil Level

Before you use the lawn mower, ensure that the oil level is between the **Add** and the **Full** marks as shown on the dipstick (Fig. 5). If the oil level is below the **Add** mark, add oil. Refer to Filling the Crankcase with Oil on page 7.

Cleaning under the Housing

Remove grass clippings and dirt from under the housing after each use.

Washing Method

1. Move the lawn mower onto a flat paved surface near a water hose.
2. Turn the water on high.
3. Start the engine.
4. Hold the running water hose at handle level and direct the water flow on the ground just in front of the **rear right** wheel (Fig. 9).

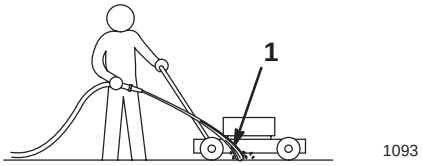

Figure 9

1. Rear right wheel

Note: The water will splash into path of the blade and wash out the clippings. Continue washing with water until you no longer see clippings being washed out from under the housing.

5. Turn off the water.
6. Move the lawn mower to a dry area, and let the engine run for one minute to dry out the lawn mower and its components.
7. Stop the engine and wait for all moving parts to stop.

If the underside of the housing has excessive grass buildup, wait for 30 minutes and repeat steps 2 through 7 above.

Scraping Method

Warning

Tipping the lawn mower may cause the fuel to leak from the carburetor or the fuel tank. Gasoline is extremely flammable, highly explosive and under certain conditions can cause personal injury or property damage.

Avoid fuel spills by running the engine dry or removing gasoline with a hand pump; never siphon.

If washing does not remove all the debris from under the housing, tip the lawn mower and scrape it clean.

1. Disconnect the wire from the spark plug (Fig. 7).
2. Drain the gasoline from the fuel tank; refer to steps 3 and 4 of Emptying the Fuel Tank on page 15.
3. Tip the lawn mower onto its **left** side.
4. Remove the dirt and grass clippings with a hardwood or plastic scraper. Avoid burrs and sharp edges.

Important Move the blade as little as possible to avoid future starting problems.

5. Turn the lawn mower upright.
6. Connect the wire to the spark plug.

Replacing the Air Filter

Replace the air filter after every 25 operating hours; replace it more frequently when you operate the lawn mower in dusty or dirty conditions.

Important Do not operate the engine without the air filter element; extreme engine damage will occur.

1. Stop the engine and wait for all moving parts to stop.
2. Disconnect the wire from the spark plug (Fig. 7).
3. Loosen the screw that secures the air filter cover to the engine (Fig. 10).

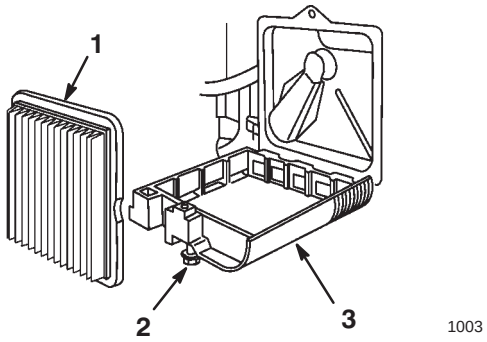

Figure 10

1. Air filter
2. Screw
3. Cover

4. Tilt the air filter cover down and clean it thoroughly.
5. Remove and discard the old paper air filter (Fig. 10).

Important Do not try to clean a paper air filter.

6. Insert a new air filter.
7. Install the air filter cover.
8. Connect the wire to the spark plug.

Servicing the Spark Plug

Check the spark plug after every 25 operating hours. Use a **Champion RJ19LM** spark plug or equivalent.

1. Stop the engine and wait for all moving parts to stop.
2. Disconnect the wire from the spark plug (Fig. 7).
3. Clean around the spark plug and remove it from the cylinder head.

Important Replace a cracked, fouled, or dirty spark plug. Do not clean the electrodes because grit entering the cylinder could damage the engine.

4. Set the gap on the new plug to 0.030 in. (0.76 mm) (Fig. 11).

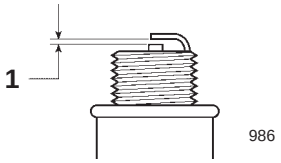

Figure 11

1. 0.030 in. (0.76 mm)

5. Install the spark plug and the gasket seal.
6. Torque the spark plug to 15 ft-lb (20 N·m).
7. Connect the wire to the spark plug.

Changing the Engine Oil

Change the oil after the first 5 operating hours and then after every 50 hours or every season. Run the engine just before changing the oil to warm the oil. Warm oil flows better and carries more contaminants.

Note: Change the oil after every 25 hours when operating under a heavy load or in high temperatures.

1. Disconnect the wire from the spark plug (Fig. 7).
2. Drain the gasoline from the fuel tank; refer to steps 3 and 4 of Emptying the Fuel Tank on page 15.
3. Remove the dipstick from oil fill tube and place a drain pan next to the **left** side of the lawn mower.
4. Tip the lawn mower onto its **left** side, allowing the oil to drain into the drain pan (Fig. 12).

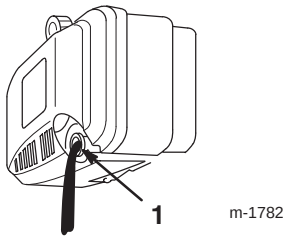

Figure 12

1. Oil fill tube

5. Turn the lawn mower upright.
6. Fill the crankcase with fresh oil to the Full mark on the dipstick. Refer to Filling the Crankcase with Oil on page 7**.**
7. Install the dipstick.
8. Wipe up any spilled oil.
9. Connect the wire to the spark plug.
10. Recycle the used oil according to local codes.

Maintaining the Blade

A straight, sharp blade provides the best cutting performance. Regularly inspect and sharpen the blade.

Warning

The blade is sharp; contacting the blade can result in serious personal injury.

Wear gloves or wrap the sharp edges of the blade with a rag.

1. Stop the engine and wait for all moving parts to stop.
2. Disconnect the wire from the spark plug (Fig. 5).

Warning

Tipping the lawn mower may cause the fuel to leak from the carburetor or the fuel tank. Gasoline is extremely flammable, highly explosive and under certain conditions can cause personal injury or property damage.

Avoid fuel spills by running the engine dry or removing gasoline with a hand pump; never siphon.

3. Drain the gasoline from the fuel tank; refer to steps 3 and 4 of Emptying the Fuel Tank on page 15.

4. Tip the lawn mower on its **left** side (air filter up) (Fig. 13).

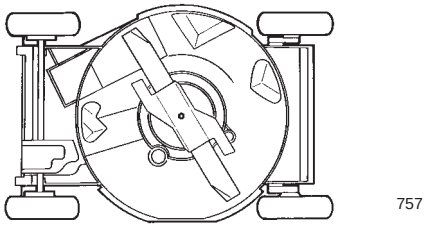

Figure 13

Important Move the blade as little as possible to avoid future staring problems.

Inspecting the Blade

Carefully examine the blade for sharpness and wear, especially where the flat and the curved parts meet (Fig. 14A). Because sand and abrasive material can wear away the metal that connects the flat and curved parts of the blade, check the blade before using the lawn mower. If you notice a slot or wear (Figs. 14B and 14C), replace the blade; refer to Removing the Blade on page 14.

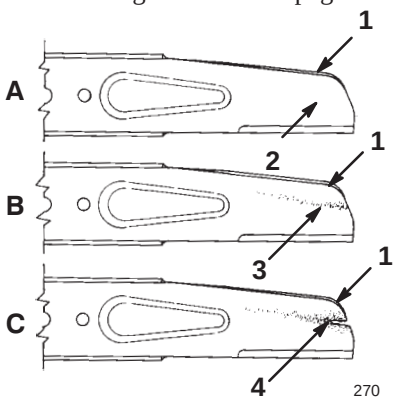

Figure 14

1. Sail
2. Flat part of blade
3. Wear
4. Slot formed

Note: For the best performance, install a new blade before the cutting season begins. During the year, file down any small nicks to maintain the cutting edge.

Danger

A worn or damaged blade can break, and a piece of the blade could be thrown into the operator's or bystander's area, resulting in serious personal injury or death.

- **Inspect the blade periodically for wear or damage.**
- **Replace a worn or damaged blade.**

Removing the Blade

1. Grasp the end of the blade using a rag or a thickly padded glove.

2. Remove the blade bolt, the accelerator, and the blade (Fig. 15).

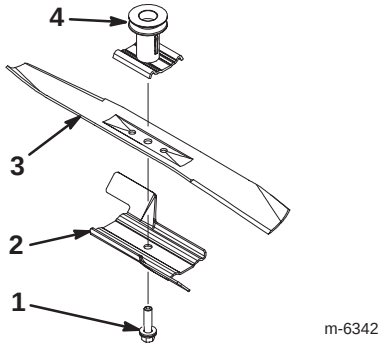

Figure 15

1. Blade bolt
2. Accelerator
3. Blade
4. Blade driver

Sharpening the Blade

File the top side of the blade to maintain its original cutting angle (Fig. 16A) and inner cutting edge radius (Fig. 16B). The blade will remain balanced if you remove the same amount of material from both cutting edges.

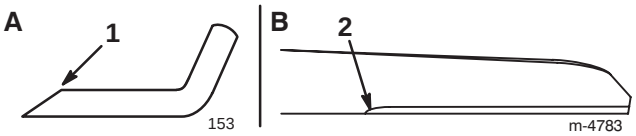

Figure 16

1. Sharpen at this angle only
2. Maintain the original radius here

Balancing the Blade

1. Check the balance of the blade by placing the center hole of the blade over a nail or screwdriver shank clamped horizontally in a vise (Fig. 17).

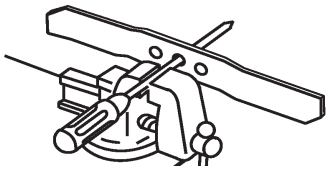

1007

Figure 17

Note: You can also check the balance using a commercially manufactured blade balancer.

2. If either end of the blade rotates downward, file that end (not the cutting edge or the end near the cutting edge). The blade is properly balanced when neither end drops.

Installing the Blade

1. Install a sharp, balanced Toro blade, the accelerator, and the blade bolt (Fig. 15).

   Note: The sail part of the blade must point upward (toward the top of the housing).

2. Torque the blade bolt to 60 ft-lb (82 N·m).

Warning

Operating the lawn mower without the accelerator in place can cause the blade to flex, bend, or break, resulting in serious injury or death to the operator or bystanders.

Do not operate the lawn mower without the accelerator.

3. Return the lawn mower to its upright position.
4. Connect the wire to the spark plug.

Cleaning the Cooling System

After every 100 operating hours or every season, clean the dirt and the chaff from the cylinder, the cylinder head fins, and around the carburetor and the linkage. Remove debris from the air intake slots on the recoil housing. This will ensure proper cooling and the best engine performance.

Emptying the Fuel Tank

1. Stop the engine and wait for it to cool.

Important Drain gasoline from a cold engine only.

2. Disconnect the wire from the spark plug (Fig. 7).
3. Remove the cap from the fuel tank (Fig. 5).
4. Use a hand pump to pump the gasoline into a clean approved gasoline container.
5. Connect the wire to the spark plug.
6. Run the engine until it stops.
7. Start the engine again to ensure that all the gasoline is out of the carburetor.

Folding the Handle

Warning

Folding or unfolding the handle improperly can pinch, stretch, or damage one or more of the cables. Any pinched, stretched, or damaged cable may cause an operational failure that results in an unsafe operating condition.

- **Do not pinch, stretch, or damage the cables.**
- **Handle the cables with care when folding or unfolding the handle.**
- **Do not use the lawn mower if one or more of the cables are pinched, stretched, or damaged. Contact an Authorized Service Dealer.**

Important Do not remove or loosen the knobs that secure the the lower handle to the swing bracket. Do not fold the upper handle backward.

1. Loosen the knobs that secure the upper handle section.
2. Carefully swing the upper handle section forward until it rests on the engine (Fig. 18).

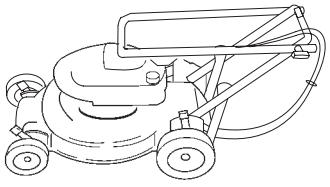

m-4217a

Figure 18

Storage

To prepare the lawn mower for off-season storage, perform the recommended maintenance procedures. Refer to Maintenance on page 11.

Store the lawn mower in a cool, clean, dry place. Cover the lawn mower to keep it clean and protected.

Preparing the Fuel System

Warning

Gasoline can vaporize if you store it over long periods of time and explode if it comes into contact with an open flame.

- **Do not store gasoline over long periods of time.**
- **Do not store the lawn mower with gasoline in the fuel tank or the carburetor in an enclosure with an open flame. (For example, a furnace or a water heater pilot light.)**
- **Allow the engine to cool before storing it in any enclosure.**

Empty the fuel tank when mowing the last time before storing the lawn mower.

1. Run the lawn mower until the engine stops from running out of fuel.
2. Prime the engine and start it again.
3. Allow the engine to run until it stops. When you can no longer start the engine, it is sufficiently dry.

Preparing the Engine

1. While the engine is still warm, change the oil in the crankcase. Refer to Changing the Engine Oil on page 13.
2. Remove the spark plug (Fig. 7).
3. Using an oil can, add about one tablespoon of oil through the spark plug hole.
4. Slowly rotate the engine several times using the starter rope to distribute the oil.
5. Install the spark plug but **do not** connect the wire to the spark plug.

General Information

1. Clean the housing. Refer to Cleaning under the Housing on page 12.
2. Clean any dirt and chaff from the cylinder, cylinder head fins, and blower housing.
3. Remove grass clippings, dirt, and grime from the external parts of the engine, the shrouding, and the top of the housing.
4. Check the condition of the blade. Refer to Maintaining the Blade on page 13.
5. Replace the air filter; refer to Replacing the Air Filter on page 12.
6. Tighten all nuts, bolts, and screws.
7. Touch up all rusted or chipped paint surfaces with paint available from an Authorized Service Dealer.

Removing the Lawn Mower from Storage

Warning

Folding or unfolding the handle improperly can pinch, stretch, or damage one or more of the cables. Any pinched, stretched, or damaged cable may cause an operational failure that results in an unsafe operating condition.

- **Do not pinch, stretch, or damage the cables.**
- **Handle the cables with care when folding or unfolding the handle.**
- **Do not use the lawn mower if one or more of the cables are pinched, stretched, or damaged. Contact an Authorized Service Dealer.**

1. Carefully unfold the upper handle until it nests with the lower handle, then tighten the knobs.
2. Check and tighten all fasteners.
3. Remove the spark plug (Fig. 7) and spin the engine rapidly using the starter to blow the excess oil from the cylinder.
4. Clean the spark plug or replace it if it is cracked, broken, or if the electrodes are worn.
5. Install the spark plug and torque it to 15 ft-lb (20 N·m).
6. Perform the recommended maintenance procedures; refer to Maintenance on page 11.
7. Fill the fuel tank with fresh, clean gasoline.
8. Check the engine oil level. Refer to Checking the Engine Oil Level on page 11.
9. Connect the wire to the spark plug.

Accessories

You may purchase the following accessories from an Authorized Service Dealer:

- Dethatcher kit
- Side discharge kit
- Spark arrestor

Troubleshooting

Toro designed and built your lawn mower for trouble-free operation. Check the following components and items carefully, and refer to Maintenance on page 11 for more information. If a problem continues, contact an Authorized Service Dealer.

Problem	Possible Causes	Corrective Action
Engine does not start	1. The fuel tank is empty or the fuel system contains stale fuel.	1. Drain and/or fill the fuel tank with fresh gasoline. If the problem persists, contact an Authorized Service Dealer.
	2. The primer has not been pushed in.	2. Push the primer in 3 times.
	3. The wire is not connected to the spark plug.	3. Connect the wire to the spark plug.
	4. The spark plug is pitted, fouled, or the gap is incorrect.	4. Check the spark plug and adjust the gap if necessary. Replace the spark plug if it is pitted, fouled, or cracked.
Engine starts hard or loses power	1. The fuel tank contains stale fuel.	1. Drain and fill the fuel tank with fresh gasoline.
	2. The fuel cap vent hole is plugged.	2. Clean the fuel cap vent hole or replace the fuel cap.
	3. The air filter element is dirty and is restricting the air flow.	3. Clean the air filter pre-cleaner and/or replace the paper air filter.
	4. The underside of the housing contains clippings and debris.	4. Clean under the housing.
	5. The spark plug is pitted, fouled, or the gap is incorrect.	5. Check the spark plug and adjust the gap if necessary. Replace the spark plug if it is pitted, fouled, or cracked.
	6. The engine oil level is low or the oil is dirty.	6. Check the engine oil. Change the oil if it is dirty or add oil if it is low.
Engine runs rough	1. The wire is not connected to the spark plug.	1. Connect the wire to the spark plug.
	2. The spark plug is pitted, fouled, or the gap is incorrect.	2. Check the spark plug and adjust the gap if necessary. Replace the spark plug if it is pitted, fouled, or cracked.
	3. The air filter element is dirty and is restricting the air flow.	3. Clean the air filter pre-cleaner and/or replace the paper air filter.
Lawn mower or engine vibrates excessively	1. The blade is bent or is out of balance.	1. Balance the blade. If the blade is bent, replace it.
	2. The blade bolt is loose.	2. Tighten the blade bolt.
	3. The underside of the housing contains clippings and debris.	3. Clean under the housing.
	4. The engine mounting bolts are loose.	4. Tighten the engine mounting bolts.

Problem	Possible Causes	Corrective Action
Uneven cutting pattern	1. All 4 wheels are not at the same height. 2. The blade is dull. 3. You are mowing in the same pattern repeatedly. 4. The underside of the housing contains clippings and debris.	1. Place all 4 wheels at the same height. 2. Sharpen and balance the blade. 3. Change the mowing pattern. 4. Clean under the housing.
Discharge chute plugs	1. The cutting height is too low. 2. You are mowing too fast. 3. The grass is wet. 4. The underside of the housing contains clippings and debris.	1. Raise the cutting height. 2. Slow down. 3. Allow the grass to dry before mowing. 4. Clean under the housing.
Lawn mower does not self-propel	1. The self-propel drive cable is out of adjustment or is damaged. 2. There is debris under the belt cover.	1. Adjust the self-propel drive cable. Replace the cable if necessary. 2. Clean the debris from under the belt cover.

The Toro Starting Guarantee

A Five-Year Full Warranty on All
Toro GTS®-5 Engines

Conditions and Products Covered

The Toro Company and its affiliate, Toro Warranty Company, pursuant to an agreement between them, jointly guarantee that your Toro Engine will start on the first or second pull for five years from the date of purchase—if you provide the routine maintenance it requires—or we will fix it free of charge. This warranty covers the cost of parts and labor, but you must pay transportation costs. This covers Toro rotary mower and snow product engines.

Instructions for Obtaining Warranty Service

If a normal, able-bodied adult can no longer start your product's engine in one or two pulls, follow this procedure:

1. Contact any Toro Authorized or Master Service Dealer to arrange service at their dealership. To locate a dealer convenient to you, refer to the Yellow Pages of your telephone directory (look under "Lawn Mowers") or access our website at www.Toro.com. U.S. Customers may also call 800-421-9684 to use our 24-hour Toro dealer locator system.
2. Bring the product, your maintenance records, and your proof of purchase (sales receipt) to the Service Dealer.

If for any reason you are dissatisfied with the Service Dealer's analysis or with the assistance provided, contact us at:

Customer Care Department, Consumer Division
Toro Warranty Company
8111 Lyndale Avenue South
Bloomington, MN 55420-1196
800-348-2424 (U.S. customers)
877-484-9255 (Canada customers)

Owner Responsibilities

You must maintain your Toro Engine by following the maintenance schedule detailed in the operator's manual. You must record this work in the maintenance chart provided in your operator's manual and keep your proof of purchase. Such routine maintenance, whether performed by a dealer or by you, is at your expense.

Items and Conditions Not Covered

There is no other express warranty except for The Toro Total Coverage Guarantee and special emission system coverage on some products. This warranty does not cover the following:

- Any repairs on products used commercially
- Normal maintenance including replacement of spark plugs, air filter, fuel filter, and carburetor adjustments
- Oil change and lubrication
- Repairs or adjustments due to the following:
  - failure to follow proper maintenance procedures
  - rotary mower blade or snowthrower auger/paddles striking an object
  - contaminants in the fuel system
  - improper fuel or fuel mixture (consult your operator's manual if in doubt)
  - failure to drain the fuel system prior to any period of non-use over three months
  - operation misuse, neglect, or accidents
  - repairs or attempted repairs by anyone other than an Authorized Service Dealer
- Special operational conditions where starting may require more than two pulls, including the following:
  - first time starts after extended period of non-use or seasonal storage
  - cool temperature starts such as those found in early spring and late autumn (applies to rotary products only)
  - improper starting procedures

    If you are having difficulty starting your unit, please check the operator's manual to ensure that you are using the correct starting procedures. This can save an unnecessary visit to a Service Dealer.

All warranty repairs reimbursable under this warranty must be performed by an Authorized Toro Service Dealer using Toro approved replacement parts.

General Conditions

Repair by an Authorized Toro Service Dealer is your sole remedy under this warranty.

Neither The Toro Company nor Toro Warranty Company is liable for indirect, incidental or consequential damages in connection with the use of the Toro Products covered by this warranty, including any cost or expense of providing substitute equipment or service during reasonable periods of malfunction or non-use pending completion of repairs under this warranty.

This warranty gives you specific legal rights, and you may also have other rights which vary from state to state.

Guaranteed to Start Maintenance Record

To keep the starting guarantee in effect, you must perform the following maintenance according to the recommended maintenance schedule. Follow the procedures in this operator's manual and record all maintenance activities on this chart.

Date	Hours Used	Air Cleaner Service (mowers only)	Change Oil (does not apply to two-cycle)	Lubricate Wheels (mowers only)	Check Spark Plug	Storage Preparation

Date	Hours Used	Air Cleaner Service (mowers only)	Change Oil (does not apply to two-cycle)	Lubricate Wheels (mowers only)	Check Spark Plug	Storage Preparation

Gas, Cordless, Electric, and 21″ Commercial Duty Walk Mowers

The Toro Total Coverage Guarantee

A Full Warranty
(Limited Warranty for Commercial Use)

Conditions and Products Covered

The Toro Company and its affiliate, Toro Warranty Company, pursuant to an agreement between them, jointly promise to repair any Toro Product used for normal residential purposes* if defective in materials or workmanship or if it stops functioning due to the failure of a component. The following time periods apply from the date of purchase:

Products	Warranty Period
• Super Recycler® Walk Mowers	5 year full warranty
• All Other Mowers	2 year full warranty
• All Batteries	1 year full warranty

This warranty includes the cost of parts and labor, but you must pay transportation costs.

This warranty applies to all gas, cordless, and electric consumer walk power mowers.

* Normal residential purposes means use of the product on the same lot as your home. Use at more than one location is considered commercial use, and the commercial use warranty would apply.

Limited Warranty for Commercial Use

Toro Walk Power Mowers used for commercial, institutional, or rental use are warranted against defects in materials or workmanship. Components failing due to normal wear are not covered by this warranty. The following time periods apply from the date of purchase:

Products	Warranty Period	
	Engine	Entire Unit
• 21″ Commercial Duty Walk Mowers	2 year limited	1 year limited
• All Other Mowers	45 day limited	45 day limited

Instructions for Obtaining Warranty Service

If you think that your Toro Product contains a defect in materials or workmanship, follow this procedure:

1. Contact any Toro Authorized or Master Service Dealer to arrange service at their dealership. To locate a dealer convenient to you, refer to the Yellow Pages of your telephone directory (look under “Lawn Mowers”) or access our website at www.Toro.com. U.S. Customers may also call 800-421-9684 to use our 24-hour Toro dealer locator system.
2. Bring the product and your proof of purchase (sales receipt) to the Service Dealer.

If for any reason you are dissatisfied with the Service Dealer’s analysis or with the assistance provided, contact us at:

Customer Care Department, Consumer Division
Toro Warranty Company
8111 Lyndale Avenue South
Bloomington, MN 55420-1196
800-348-2424 (U.S. customers)
877-484-9255 (Canada customers)

Owner Responsibilities

You must maintain your Toro Product by following the maintenance procedures described in the operator’s manual. Such routine maintenance, whether performed by a dealer or by you, is at your expense.

Items and Conditions Not Covered

There is no other express warranty except for special emission system coverage on some products and the Toro Starting Guarantee on GTS Engine. This express warranty does not cover:

- Cost of regular maintenance service or parts, such as filters, fuel, lubricants, oil changes, spark plugs, blade sharpening, worn blade, cable/linkage adjustments, or brake and clutch adjustments
- Any product or part which has been altered or misused or required replacement or repair due to accidents or lack of proper maintenance
- Repairs necessary due to improper fuel, contaminants in the fuel system, or failure to properly prepare the fuel system prior to any period of non-use over three months
- Repairs necessary due to improper battery care, electrical supply irregularities, or failure to properly prepare the mower prior to any period of non-use
- Pickup and delivery charges

All repairs covered by this warranty must be performed by an Authorized Toro Service Dealer using Toro approved replacement parts.

General Conditions

Repair by an Authorized Toro Service Dealer is your sole remedy under this warranty.

Neither The Toro Company nor Toro Warranty Company is liable for indirect, incidental or consequential damages in connection with the use of the Toro Products covered by this warranty, including any cost or expense of providing substitute equipment or service during reasonable periods of malfunction or non-use pending completion of repairs under this warranty.

Some states do not allow exclusions of incidental or consequential damages, or limitations on how long an implied warranty lasts, so the above exclusions and limitations may not apply to you.

This warranty gives you specific legal rights, and you may also have other rights which vary from state to state.

Countries Other than the United States or Canada

Customers who have purchased Toro products exported from the United States or Canada should contact their Toro Distributor (Dealer) to obtain guarantee policies for your country, province, or state. If for any reason you are dissatisfied with your Distributor’s service or have difficulty obtaining guarantee information, contact the Toro importer. If all other remedies fail, you may contact us at Toro Warranty Company.

Part No. 374-0000 Rev. B