FORM NO. 3311-707

TORO®

MODEL NO. 20700-1000001 & UP

PARTS CATALOG

21" H.P. REAR BAGGER

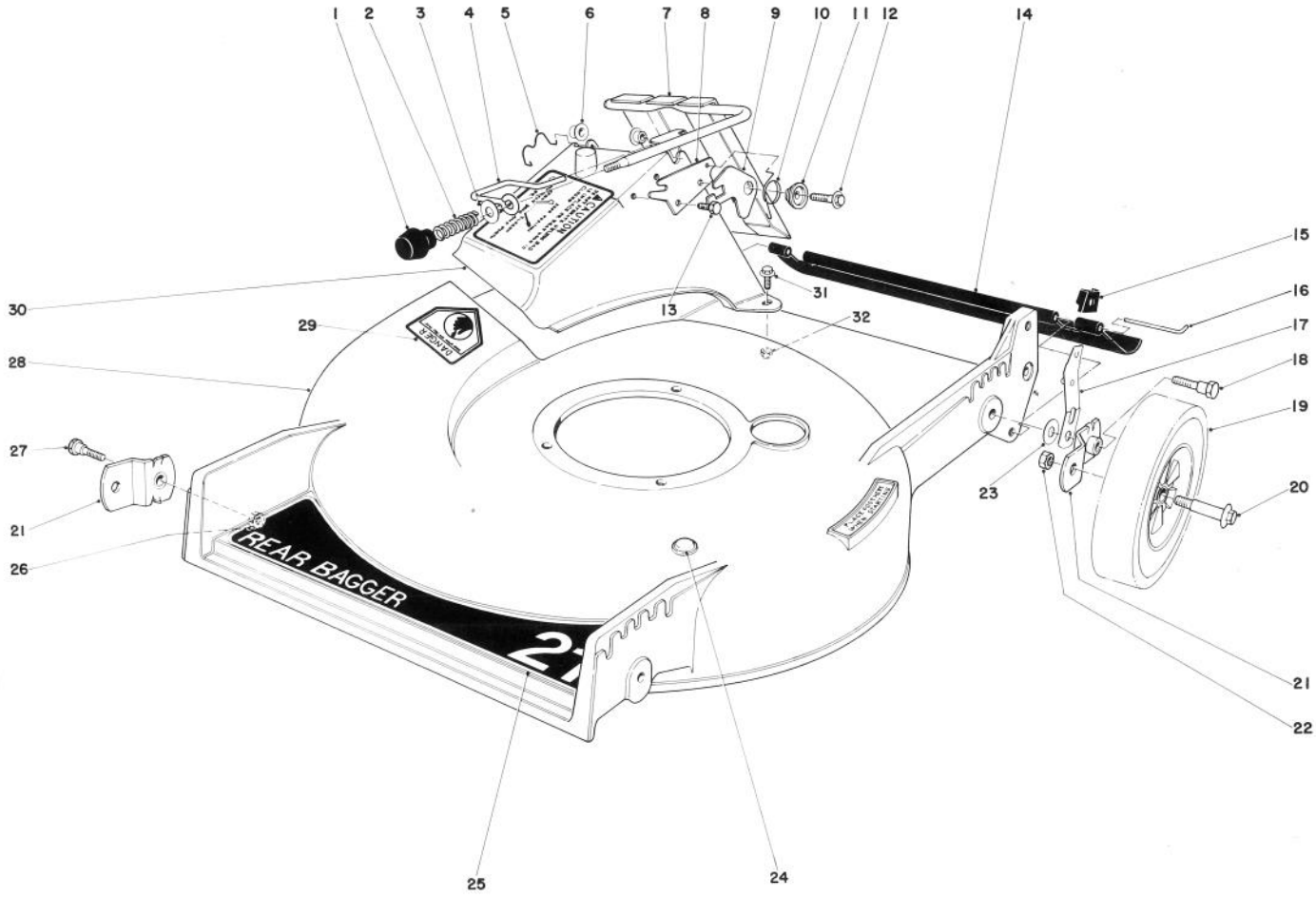

HOUSING ASSEMBLY

Ref. No.	Part No.	Description	No. Used
1	233-37	Knob	1
2	23-0920	Spring Compression	1
3	23-1120	Washer	1
4	23-0940	Latch-Door	1
5	33-4830	Door Retainer	1
6	23-0880	Bushing	2
7	33-5660	Door Handle	1
8	23-1040	Latch Plate	1
9	42-4010	Safety Latch	1
10	33-4860	Torsion Spring	1
11	23-1180	Spacer Latch	1
12	11-9760	Screw Thread Forming	1
13	32104-17	Screw Hex. Hd. Self Tapping	1
14	29-9180	Rear Shield	1
15	25-7740	Knob Arm	4
16	33-3203	Rod Shield	1
17	33-4850	Spring Arm	4

Ref. No.	Part No.	Description	No. Used
18	3-0655	Pivot Screw	2
19	33-5600	Wheel & Tire Assembly	4
20	27-6230	Wheel Bolt	4
21	24-7710	Pivot Arm "A"	2
*	23-9120	Pivot Arm "B"	2
22	32146-6	Nut	4
23	5-4460	Pivot Washer	4
24	2410-54	Plug	1
25	40-2250	Decal – Rear Bagger	1
26	32146-5	Nut	4
27	25-3440	Pivot Screw	2
28	11-0169	Deck	1
29	39-5770	Decal – Danger	1
30	36-1350	Discharge Chute	1
31	321-7	Capscrew	2
32	3296-42	Locknut	2
*	8-9929	Loose Parts	1

*Not Illustrated

COPYRIGHT © ALL RIGHTS RESERVED
The Toro Company – 1981
MINNEAPOLIS, MN 55420 – U.S.A.

PRICE $1.00

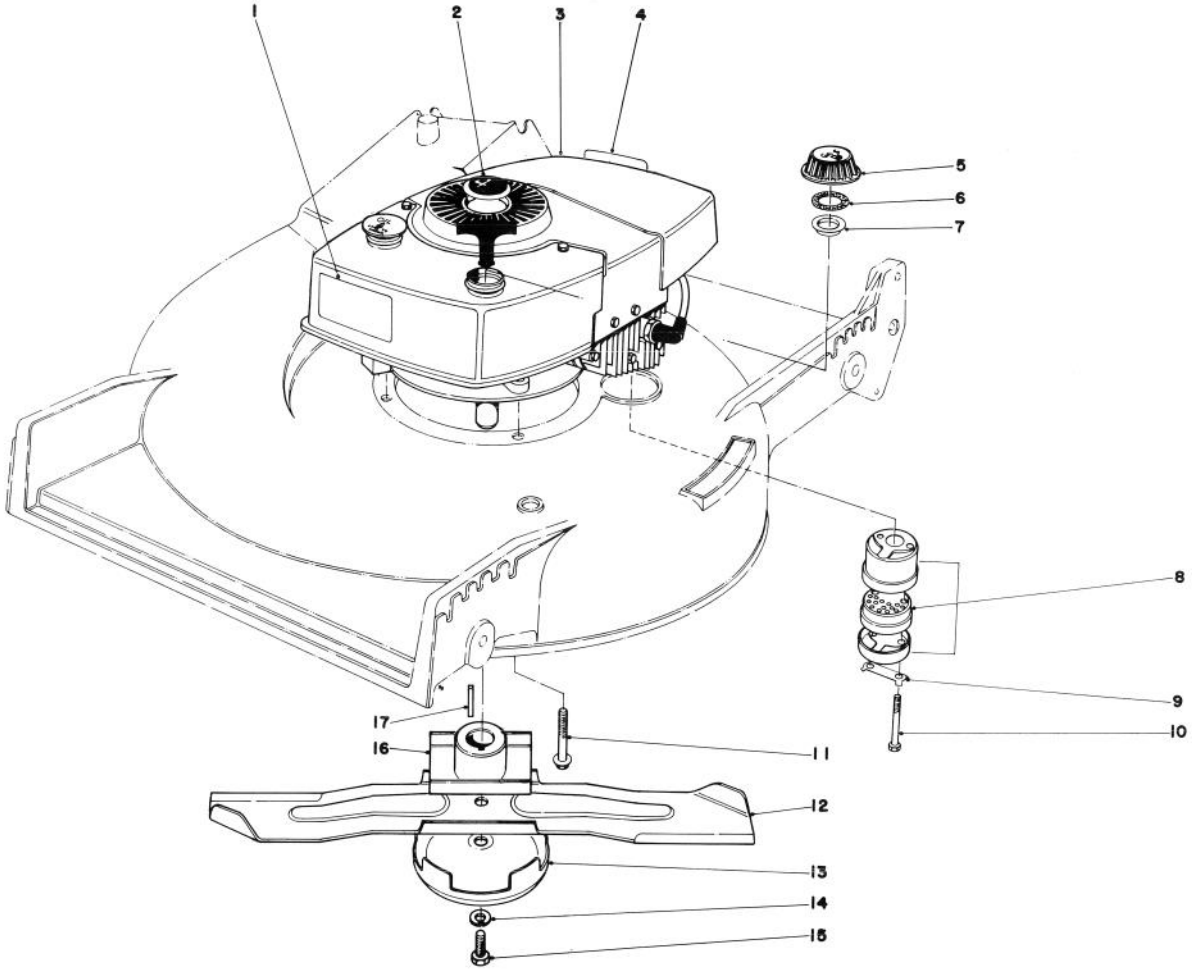

ENGINE ASSEMBLY

Ref. No.	Part No.	Description	No. Used
1	40-2570	Decal – Engine	1
2	38-1480	Plug Button	1
3	221-691	Engine	1
4	37-1580	Decal – Maintenance	1
5	27-7870	Gas Cap (Incl. Ref. #6 & 7)	1
6	2210-144	Gasket	1
7	2210-143	Baffle	1
8	5-4769	Muffler Assy. (Incl. Ref. #9 & 10)	1
*	39-5930	Spark Arrester Muffler Assy. – Optional (Incl. Ref. #9 & 10)	1

Ref. No.	Part No.	Description	No. Used
9	3-5094	Locking Clip	1
10	321-20	Capscrew	2
11	11-0590	Screw	3
12	26-0880	Blade	1
13	8-4240	Cup – Anti Scalp	1
14	3253-22	Lockwasher	1
15	23-0080	Blade Screw	1
16	23-0110	Blade Retainer	1
17	7-0036	Square Key	1

*Not Illustrated

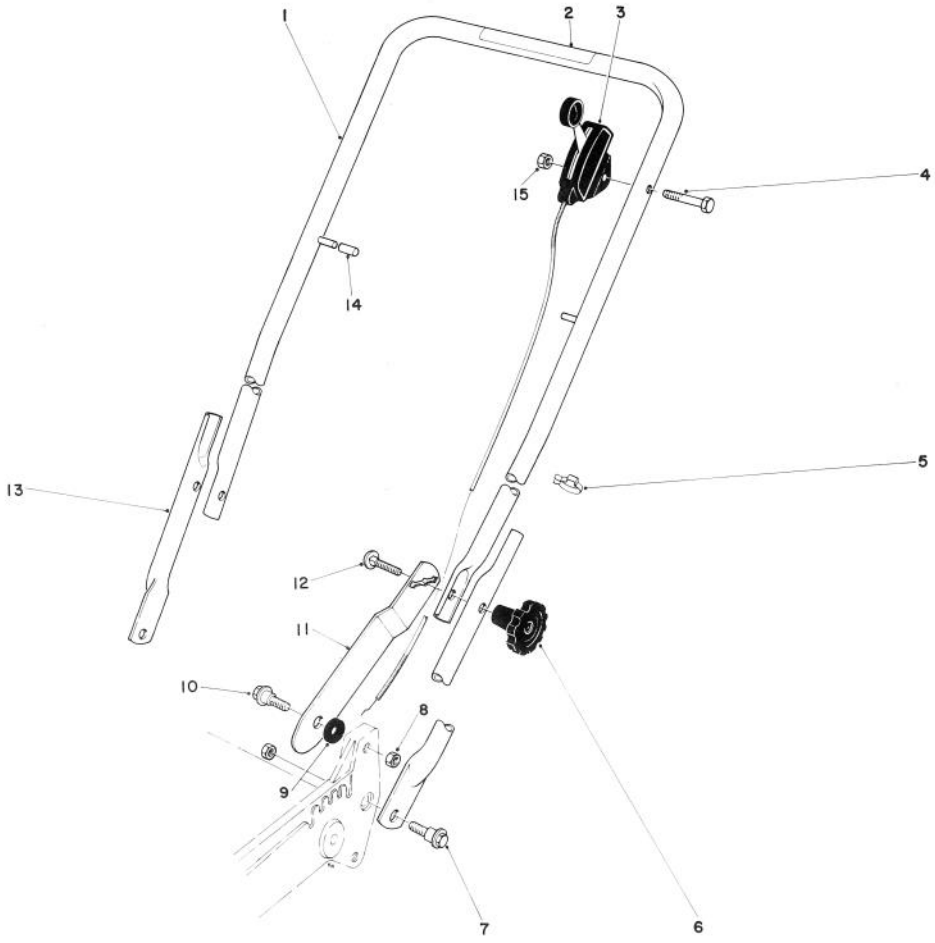

HANDLE ASSEMBLY

Ref. No.	Part No.	Description	No. Used
1	36-6850	Upper Handle	1
2	29-6290	Decal	1
3	33-2531	Throttle Control	1
4	321-10	Capscrew	1
5	218-465	Clip	1
6	19-4050	Handle Knob	2
7	27-7211	Shoulder Screw	2
8	32146-5	Nut	4

Ref. No.	Part No.	Description	No. Used
9	3-3287	Spacer – Handle Latch	2
10	27-7212	Screw	2
11	36-6900	Handle Latch L.H.	1
*	36-6890	Handle Latch R.H.	1
12	3230-5	Carriage Bolt	2
13	29-9160	Lower Handle	2
14	2410-49	Cap	2
15	32146-17	Locknut	1

*Not Illustrated

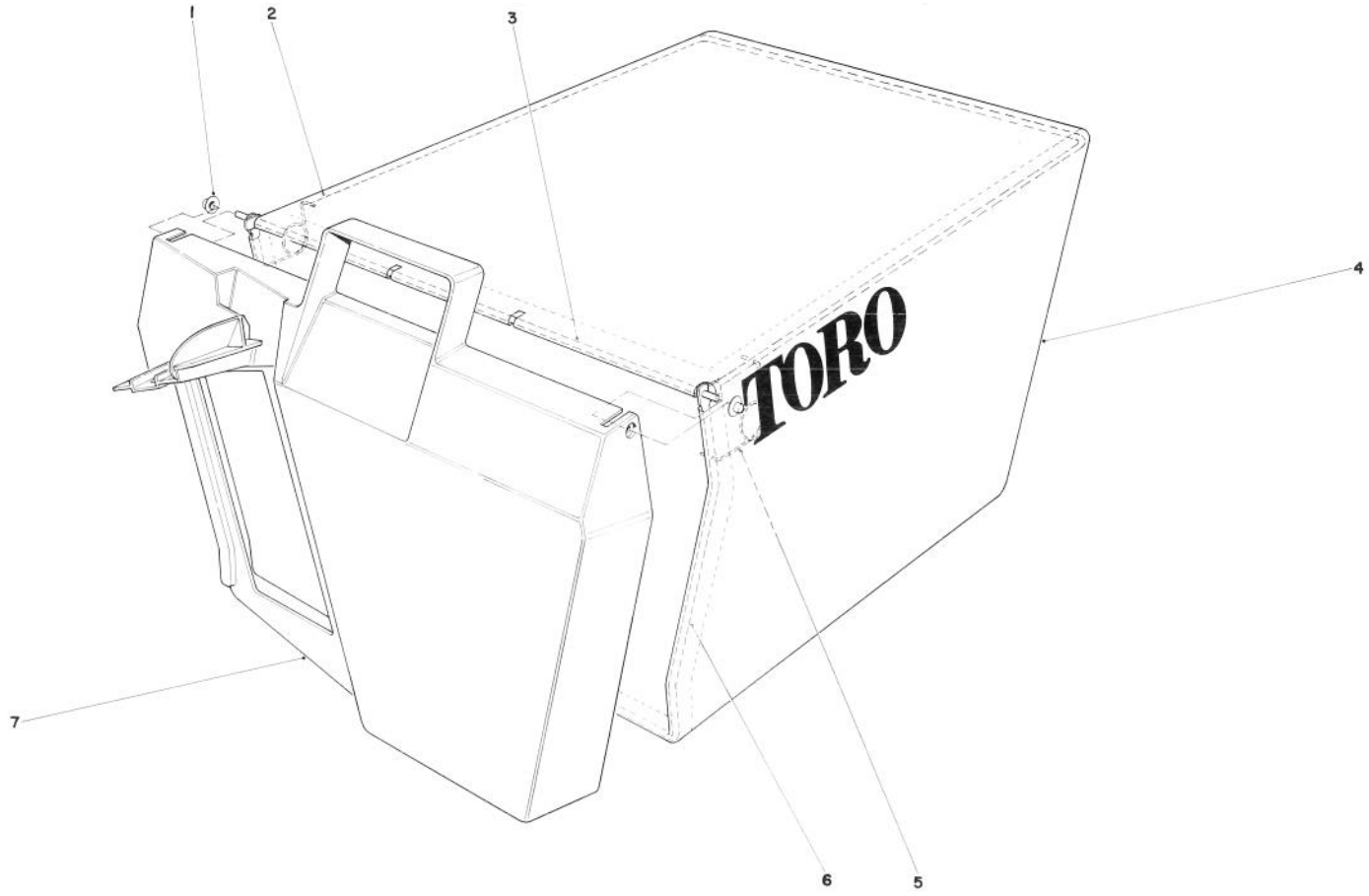

GRASS BAG ASSEMBLY NO. 11-0159

Ref. No.	Part No.	Description	No. Used
1	3290-422	Push Nut	2
2	42-4030	Bag Frame Upper	1
3	33-4820	Hinge Bag Door	1
4	8-2759	Grass Bag	1

Ref. No.	Part No.	Description	No. Used
5	36-6910	Spring	2
6	43-0030	Frame Bag	1
7	36-1330	Door Grass Bag	1

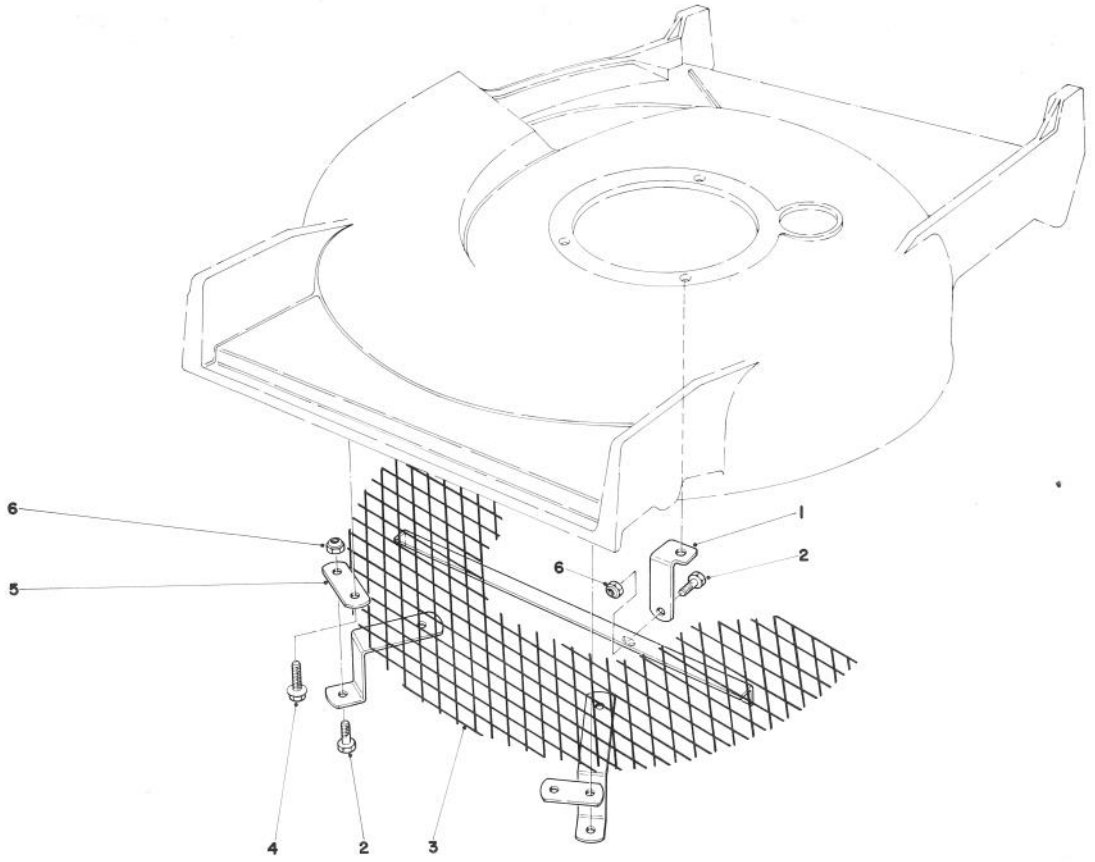

LEAF SHREDDER KIT NO. 59105 (OPTIONAL)

Ref. No.	Part No.	Description	No. Used
1	40-5040	Support Bracket	1
2	321-3	Hex Head Capscrew	3
3	39-1290	Screen	1

Ref. No.	Part No.	Description	No. Used
4	32144-11	Screw – Self Tapping	2
5	39-9690	Anchor	2
6	3296-42	Locknut	3

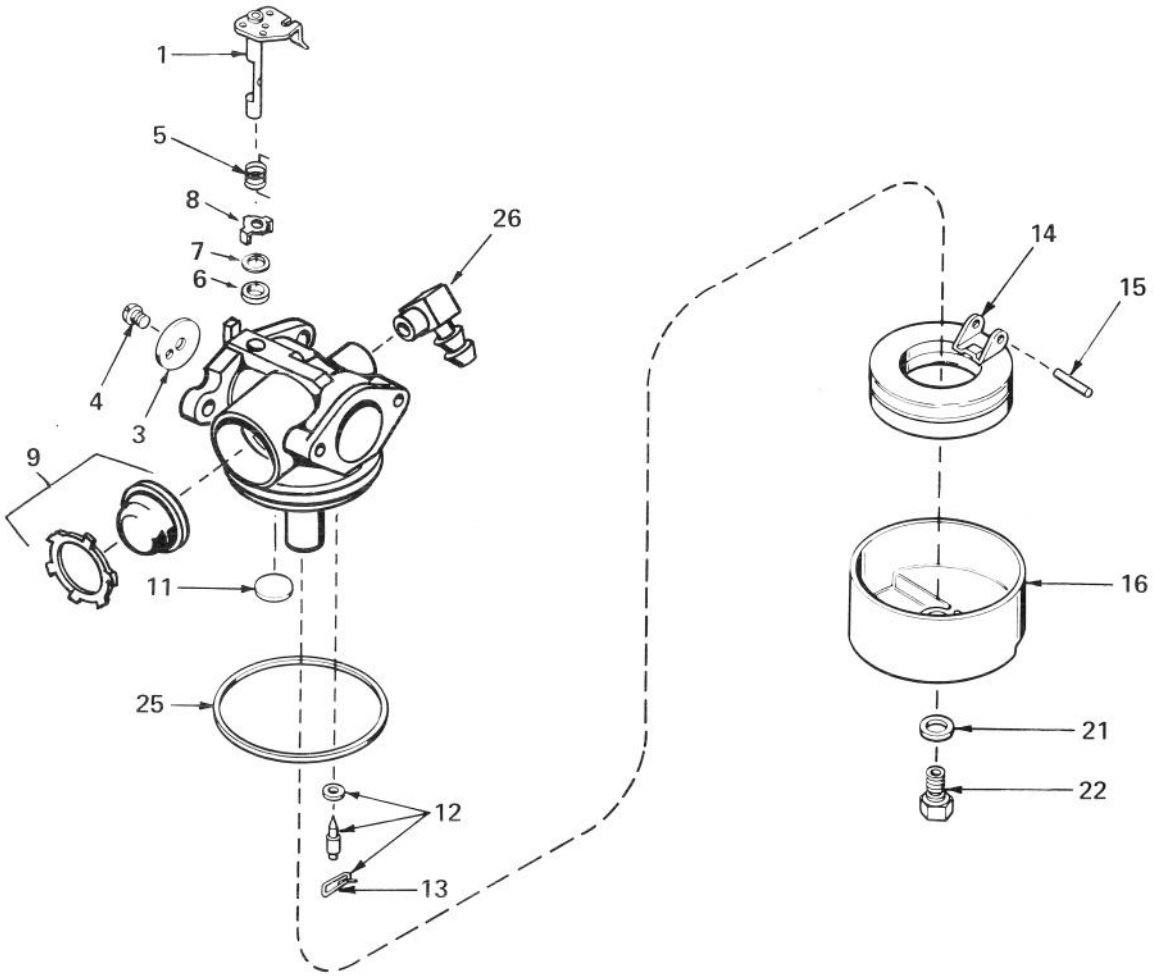

CARBURETOR NO. 632050

Ref. No.	Part No.	Description	No. Used
1	631615	Shaft & Lever Assy., Throttle	1
3	631616	Shutter, Throttle	1
4	650506	Screw, Throttle Shutter	1
5	632016	Spring, Return	1
6	631971	Seal, Dust	1
7	631184	Washer	1
8	631972	Retainer, Dust Seal	1
9	632047	Bulb & Retainer, Primer	1
11	631027	Plug, Welch	1
12	631021	Inlet Needle, Seat & Clip Assy. (Incl. Ref. #13)	1

Ref. No.	Part No.	Description	No. Used
13	631022	Clip, Inlet Needle	1
14	632019	Float, Carburetor	1
15	631024	Shaft, Float	1
16	631700	Bowl, Float	1
21	631334	Gasket, Bowl-to-body	1
22	631935	Nut, Float Bowl	1
25	631028	Gasket, Bowl-to-body	1
26	631807	Fitting, Fuel Inlet	1

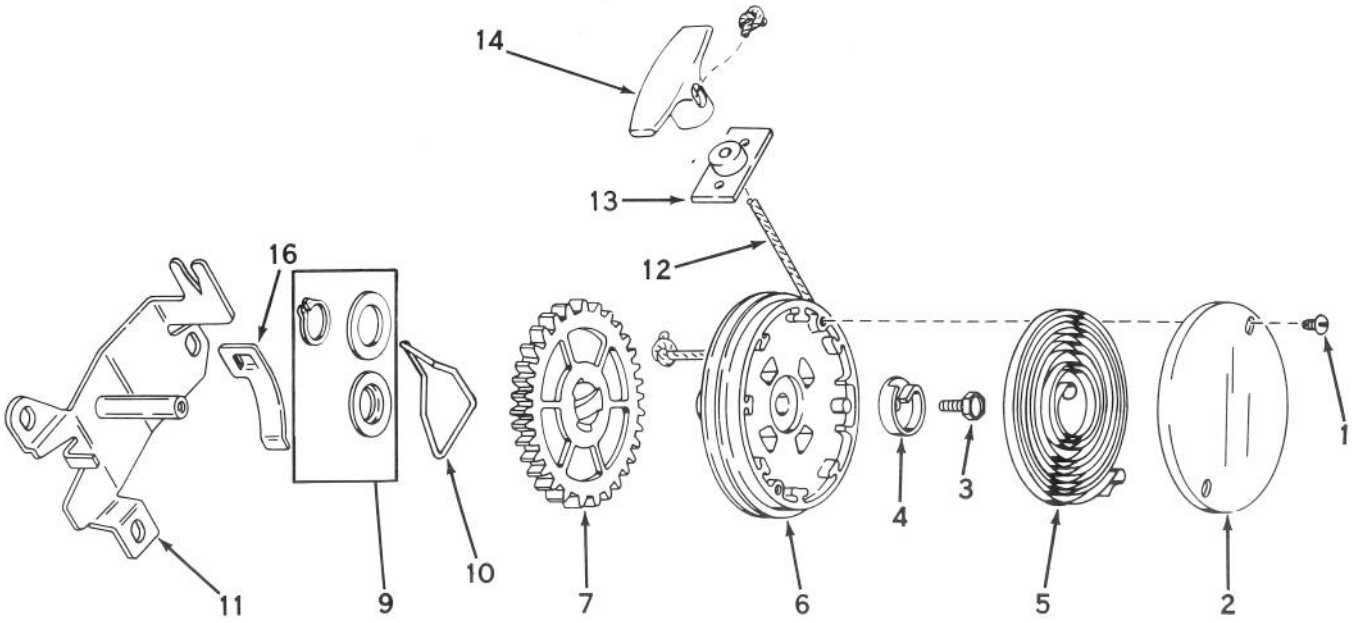

REWIND STARTER NO. 590450A

Ref. No.	Part No.	Description	No. Used
1	590477	Screw, Cover	2
2	590431	Cover, Spring	1
3	590472	Screw, Hex Washer Hd. Left Hand Thread	1
4	590432	Hub, Spring	1
5	590433	Spring, Rewind	1
6	590434A	Pulley Assy. (Incl. Ref. #9)	1
7	590435B	Gear	1
9	590470	Kit, Thrust Washer & Snap Ring	1

Ref. No.	Part No.	Description	No. Used
10	590438	Brake	1
11	590439A	Bracket Assy., Mounting	1
12	590451A	Rope, Starter (Length 69" and 5/32" diameter)	1
13	590441	Bracket Assy. (Can be removed if not required)	1
14	590452	Handle, Starter	1
16	590446	Clip, Rope	1

The Toro Promise

A ONE YEAR LIMITED WARRANTY

The Toro Company promises to repair your TORO Product if defective in materials or workmanship. The following time periods from the date of purchase apply:

Residential Product	1 Year
Residential Products Used Commercially . . .	45 Days

The costs of parts and labor are included, but the customer pays the transportation costs. Just return any residential product to an Authorized TORO Service Dealer or TORO Distributor.

Should you feel your TORO Product is defective and wish to rely on The Toro Promise, the following procedure is recommended:

1. Contact any Authorized TORO Service Dealer, TORO Master Service Dealer, or TORO Distributor (the Yellow Pages of your telephone directory is a good reference source).
2. He will either instruct you to return the product to him or recommend another Authorized TORO Service outlet which might be more convenient.
3. Bring the product along with your original sales slip, or other evidence of purchase date, to the service dealer.
4. The servicing dealer will inspect the unit, advise you whether the product is defective and, if so, make all repairs necessary to correct the defect without extra charge to you.

If for any reason you are dissatisfied with the dealer's analysis of the defect or the service performed, you may contact us.

Write:

TORO Consumer Service Department
8111 Lyndale Avenue South
Minneapolis, Minnesota 55420

The above remedy of product defects through repair by an Authorized TORO Service Dealer is the purchaser's sole remedy for any defect.

THERE IS NO OTHER EXPRESS WARRANTY. ALL IMPLIED WARRANTIES OF MERCHANTABILITY AND FITNESS FOR USE ARE LIMITED TO THE DURATION OF THE EXPRESS WARRANTY.

Some states do not allow limitations on how long an implied warranty lasts, so the above limitation may not apply to you.

This warranty applies only to parts or components which are defective and does not cover repairs necessary due to normal wear, misuse, accidents, or lack of proper maintenance. Regular, routine maintenance of the unit to keep it in proper operating condition is the responsibility of the owner.

All warranty repairs reimbursable under The Toro Promise must be performed by an Authorized TORO Service Dealer using Toro approved replacement parts.

Repairs or attempted repairs by anyone other than an Authorized TORO Service Account are not reimbursable under The Toro Promise. In addition, these unauthorized repair attempts may result in additional malfunctions, the correction of which is not covered by warranty.

THE TORO COMPANY IS NOT LIABLE FOR INDIRECT, INCIDENTAL OR CONSEQUENTIAL DAMAGES IN CONNECTION WITH THE USE OF THE PRODUCT INCLUDING ANY COST OR EXPENSE OF PROVIDING SUBSTITUTE EQUIPMENT OR SERVICE DURING PERIODS OF MALFUNCTION OR NON-USE.

Some states do not allow the exclusion or limitation of incidental or consequential damages, so the above limitation or exclusion may not apply to you.

This warranty gives you specific legal rights, and you may also have other rights which vary from state to state.

COUNTRIES OTHER THAN THE UNITED STATES OR CANADA

Customers who have purchased TORO products exported from the United States or Canada should contact their TORO Distributor (Dealer) to obtain guarantee policies for your country, province or state. If for any reason you are dissatisfied with your Distributor's service or have difficulty obtaining guarantee information, contact the TORO importer. If all other remedies fail, you may contact us at The Toro Company.

Compliance with Radio Interference Regulations Certified.
Certifie Conforme au Reglement sur le Brouillage Radioelectrique.

PRODUCT CHANGES

In an effort to make improvements available to TORO owners as quickly as possible, minor changes are incorporated into Toro's products from time to time that do not become immediately shown in the Parts Catalog. If such a change apparently has been made in your unit, which is not reflected in your manual, see your TORO Distributor or his Authorized TORO Service Dealer for information and part numbers.

IDENTIFICATION AND ORDERING

Model and Serial Numbers

The Mower has two identification numbers: a model number and a serial number. The two numbers are stamped on a decal which is located on the mower housing between the rear wheels. In any correspondence concerning the mower, supply model and serial numbers to assure that correct information and replacement parts are obtained.

To order replacement parts from an Authorized TORO Service Dealer, supply the following information:

1. Model and serial numbers of the mower.
2. Part number, description, and quantity of part(s) desired.

Note: Do not order by reference number if a parts catalog is being used; use the PART NUMBER.

Keep Your TORO All Toro Genuine TORO PARTS & ACCESSORIES ***Insist on Genuine Toro Parts***

MAINTENANCE RECORD

Date	Hours Used	Oil Change	Air Cleaner Service	Lubrication	Winter Storage	Spring Service	Spark Plug Gap

MAINTENANCE RECORD

Date	Hours Used	Oil Change	Air Cleaner Service	Lubrication	Winter Storage	Spring Service	Spark Plug Gap