Form No. 3328-705

TORO®

53 cm Super Recycler®

Walk Power Lawn Mower

Model No. 20783—Serial No. 230000001 and Up
Model No. 20784—Serial No. 230000001 and Up

Operator's Manual

CE

Original Instructions (GB)

Contents

	Page
Introduction	2
Safety	3
General Lawn Mower Safety	3
Sound Pressure	5
Sound Power	5
Vibration	5
Safety and Instruction Decals	5
Setup	6
Installing the Handle	6
Installing the Starter Rope	7
Installing the Discharge Tunnel Plug	7
Installing the Fuse	7
Before Starting	8
Filling the Crankcase with Oil	8
Filling the Fuel Tank with Gasoline	9
Reviewing the Maintenance Schedule	10
Operation	10
Controls	10
Starting the Engine	10
Stopping the Engine	10
Using the Self-propel Drive	11
Adjusting the Cutting Height	11
Using the Grass Bag	12
Operating Tips	13
Maintenance	14
Recommended Maintenance Schedule	14
Checking the Engine Oil Level	15
Cleaning under the Lawn Mower Housing	15
Cleaning the Discharge Tunnel and Plug	16
Servicing the Air Filter	16
Servicing the Spark Plug	17
Adjusting the Self-propel Drive Cable	17
Lubricating the Wheels	17
Changing the Engine Oil	18
Maintaining the Blade	19
Cleaning under the Belt Cover	21
Cleaning the Cooling System	21
Changing the Fuse	21
Charging the Battery	21
Disposing of the Battery	21
Emptying the Fuel Tank	21
Storage	22
Preparing the Fuel System	22
Preparing the Engine	22
General Information	22
Removing From Storage	22
Accessories	23
Troubleshooting	23

Introduction

Read this manual carefully to learn how to operate and maintain your product properly. The information in this manual can help you and others avoid injury and product damage. Although Toro designs and produces safe products, you are responsible for operating the product properly and safely.

Whenever you need service, genuine Toro parts, or additional information, contact an Authorized Service Dealer or Toro Customer Service and have the model and serial numbers of your product ready. Figure 1 illustrates the location of the model and serial numbers on the product.

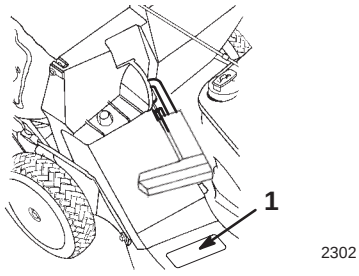

Figure 1

1. Location of the model and serial numbers

Write the product model and serial numbers in the space below:

Model No. _____

Serial No. _____

This manual identifies potential hazards and has special safety messages that help you and others avoid personal injury and even death. ***Danger***, ***Warning***, and ***Caution*** are signal words used to identify the level of hazard. However, regardless of the hazard, be extremely careful.

Danger signals an extreme hazard that **will** cause serious injury or death if you do not follow the recommended precautions.

© 2002 by The Toro Company
8111 Lyndale Avenue South
Bloomington, MN 55420-1196

All Rights Reserved
Printed in the USA

Warning signals a hazard that **may** cause serious injury or death if you do not follow the recommended precautions.

Caution signals a hazard that may cause minor or moderate injury if you do not follow the recommended precautions.

This manual uses 2 other words to highlight information. **Important** calls attention to special mechanical information and **Note:** emphasizes general information worthy of special attention.

Safety

Toro designed and tested this lawn mower to offer reasonably safe service; however, **failure to comply with the following instructions may result in personal injury.**

⚠ Warning ⚠

Engine exhaust contains carbon monoxide, an odorless, deadly poison that can kill you.

Do not run the engine indoors or in an enclosed area.

To ensure maximum safety, best performance, and to gain knowledge of the product, it is essential that you and any other operator of the lawn mower read and understand the contents of this manual before operating the lawn mower.

⚠ This is the safety alert symbol. It is used to alert you to potential personal injury hazards. Obey all safety messages that follow this symbol to avoid possible injury or death.

Improperly using or maintaining this lawn mower can result in injury. To reduce the potential for injury, comply with these safety instructions.

General Lawn Mower Safety

The following instructions have been adapted from the ANSI/OPEI standard B71.1—1998 and ISO standard 5395:1990(E). Information or terminology specific to Toro lawn mowers is enclosed in parenthesis.

This lawn mower is capable of amputating hands and feet and of throwing objects. Failure to observe the following safety instructions could result in serious injury or death.

Training

- Read this operator's manual carefully. Be thoroughly familiar with the controls and the proper use of the lawn mower before starting it.
- Never allow children to operate the lawn mower. Local regulations may restrict the age of the operator.
- Never allow adults unfamiliar with these instructions to operate the lawn mower.
- Never mow while people (especially children) or pets are nearby. Stop the lawn mower if anyone enters the area.
- Tragic accidents can occur if the operator is not alert to the presence of children. Children are often attracted to the lawn mower and the mowing activity. Never assume that children will remain where you last saw them.
- Keep children out of the mowing area and under the watchful care of a responsible adult.
- Be alert and turn the lawn mower off if children enter the area.
- Use extra care when approaching blind corners, shrubs, trees, or other objects that may obscure vision.
- Keep in mind that the operator or user is responsible for accidents or hazards occurring to other people or their property.
- See the manufacturer's instructions for proper operation and installation of accessories. Use only the accessories that are approved by the manufacturer.

Preparation

- Thoroughly inspect the area where you will use the lawn mower, and remove all stones, sticks, wires, bones, and other foreign objects.
- While mowing, always wear substantial footwear and long trousers.
- Do not operate the lawn mower when barefoot or wearing open sandals.
- Always wear safety goggles or safety glasses with side shields when operating the lawn mower.
- Warning: Gasoline is highly flammable. Take the following precautions:
  - Store fuel in containers specifically designed for this purpose.
  - Refuel outdoors only and do not smoke while refuelling.
  - Add fuel before starting the engine. Never remove the cap of the fuel tank or add gasoline while the engine is running or when the engine is hot.
  - If gasoline is spilled, do not attempt to start the engine. Move the lawn mower away from the area of spillage to avoid creating any source of ignition until the gasoline vapors have dissipated.

  - Replace all fuel tank and container caps securely.
  - If you must drain the fuel from the fuel tank, do it outdoors.
- Replace faulty mufflers.
- Before using, always visually inspect the blades, blade bolts, and cutter assembly for wear or damage. Replace worn or damaged blades and bolts in sets to preserve balance.
- On multibladed lawn mowers, use care as rotating one blade can cause the other blades to rotate.

Operation

- Do not operate the engine in a confined space where dangerous carbon monoxide fumes can collect.
- Mow only in daylight or in good artificial light.
- Always be sure of your footing on slopes.
- Walk; never run.
- Keep a firm hold on the handle.
- For wheeled rotary lawn mowers, mow across the face of slopes, never up and down.
- Exercise extreme caution when changing the direction on slopes.
- Do not mow excessively steep slopes.
- Use extreme caution when reversing or pulling the lawn mower toward you.
- Before and while moving backward, look behind and down for small children.
- Stop the blade(s) if you must tilt the lawn mower for transportation when crossing surfaces other than grass and when transporting the lawn mower to and from the area to be mowed.
- Never operate the lawn mower with damaged or missing guards or shields, or without safety devices (such as deflectors and grass catchers) in place.
- Do not change the speed settings on the engine.
- Disengage all blade and drive clutches before starting the engine.
- Start the engine carefully according to instructions and with feet well away from the blade(s).
- Do not tilt the lawn mower when starting the engine, unless you must tilt the lawn mower to start it. In this case, do not tilt it more than absolutely necessary and lift only the part which is away from the operator.
- Do not start the engine when standing in front of the discharge chute.
- Do not put your hands or feet near or under rotating parts. Keep clear of the discharge opening at all times.
- Never pick up or carry a lawn mower while the engine is running.
- Stop the engine and disconnect the spark-plug wire:
  - before clearing blockages or unclogging the chute;
  - before checking, cleaning, or working on the lawn mower;
  - after striking a foreign object. Inspect the lawn mower for damage and make repairs before starting and operating the lawn mower; and
  - if the lawn mower starts to vibrate abnormally (check it immediately).
- Stop the engine:
  - whenever you leave the lawn mower; and
  - before refuelling.
- Reduce the throttle setting during engine run-out and, if the engine has a shutoff valve, turn the fuel off after mowing.
- Stop the blade(s) when crossing gravel drives, walks, or roads.
- Shut the engine off and wait until the blade comes to a complete stop before removing the grass catcher.
- Do not operate the lawn mower while under the influence of alcohol or drugs.
- If the lawn mower should start to vibrate abnormally, stop the engine and check immediately for the cause. Vibration is generally a warning of trouble.

Slopes are a major factor related to slip and fall accidents which can result in a severe injury. If you feel uneasy on a slope, do not mow it.

- Watch for holes, ruts, or bumps. Tall grass can hide obstacles.
- Do not mow near drop-offs, ditches, or embankments. You could lose your footing or balance.
- Do not mow on wet grass. Reduced footing could cause slipping.

Maintenance and Storage

- Keep all nuts, bolts (especially blade attachment bolts), and screws tight to ensure that the lawn mower is in safe working condition.
- Never store the lawn mower with gasoline in the tank inside a building where fumes may reach an open flame or spark.

- Allow the engine to cool before storing the lawn mower in any enclosure.
- To reduce the fire hazard, keep the engine, muffler, battery compartment, and gasoline storage area free of grass, leaves, or excessive grease.
- Check the grass catcher frequently for wear or deterioration.
- Replace worn or damaged parts.
- Use extra care when handling gasoline; gasoline vapors are explosive.
- Never tamper with safety devices. Check their proper operation regularly.
- Keep the lawn mower free of grass, leaves, or other debris buildup. Clean up any oil or fuel that spills.
- Stop and inspect the lawn mower if you strike an object. Repair the lawn mower, if necessary, before starting the engine.
- Never attempt to make wheel height adjustments while the engine is running.
- Grass catcher components are subject to wear, damage, and deterioration, which could expose moving parts or allow objects to be thrown. Frequently check the components and replace them with the manufacturer's recommended parts when necessary.
- Lawn mower blades are sharp and can cut. Wrap the blade(s) or wear gloves, and use extra caution when servicing them.
- Do not change the speed settings on the engine.
- If you must drain the fuel from the fuel tank, do it outdoors.
- To ensure the best performance and safety, purchase only genuine Toro replacement parts and accessories.
- Maintain or replace safety and instruction decals when necessary.

Sound Pressure

This unit has a maximum sound pressure level at the operator's ear of 85 dBA, based on measurements of identical machines per Directive 98/37/EC.

Sound Power

This unit has a guaranteed sound power level of 99 dBA, based on measurements of identical machines per Directive 2000/14/EC.

Vibration

This unit does not exceed a hand/arm vibration level of 7.3 m/s^2, based on measurements of identical machines per Directive 98/37/EC.

Safety and Instruction Decals

Safety decals and instructions are easily visible to the operator and are located near any area of potential danger. Replace any decal that is damaged or lost.

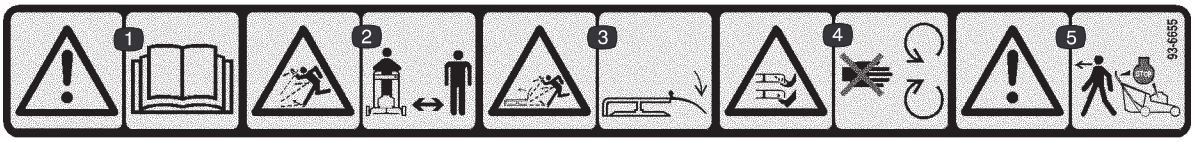

93-6655

1. Warning—read the *Operator's Manual.*
2. Thrown object hazard—keep bystanders a safe distance from the machine.
3. Thrown object hazard, mower—keep the deflector in place.
4. Cutting/dismemberment hazard of hand or foot, mower blade—stay away from moving parts.
5. Warning—stop the engine before leaving the machine.

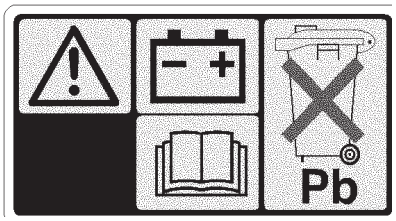

104-7953

1. Warning
2. Read the *Operator's Manual* for information on charging the battery.
3. Contains lead; do not discard.

Setup

Note: Determine the left and right sides of the machine from the normal operating position.

Installing the Handle

Warning

Folding or unfolding the handle improperly can pinch, stretch, or damage one or more of the cables. Any pinched, stretched, or damaged cable may cause an operational failure that results in an unsafe operating condition.

- **Do not pinch, stretch, or damage the cables.**
- **Handle the cables with care when folding or unfolding the handle.**
- **Do not use the lawn mower if one or more of the cables are pinched, stretched, or damaged. Contact an Authorized Service Dealer.**

1. Lay the upper handle on the ground behind the lawn mower with the handle label facing up and the control cables routed between the handle mounting brackets.

2. Remove the 4 handle bolts (2 bolts have a flat cap and 2 have a contoured cap to fit the handle) and knobs from the lower handle (Fig. 2).

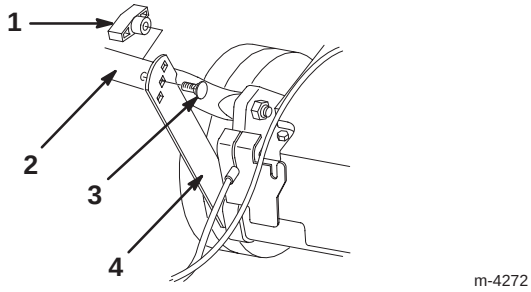

Figure 2

1. Knob (2)
2. Lower handle
3. Flat-handle bolt (2)
4. Support bracket

3. Swing the lower handle back and the support brackets up, aligning the brackets with the holes in the lower handle (Fig. 2).

4. Secure the lower handle to the support brackets with the 2 flat-handle bolts and 2 knobs, using the height adjustment holes on the brackets that best fit your height (Fig. 2).

Note: You can adjust the handle height by installing each handle bolt and knob through one of the other holes in each support bracket.

5. Slide the upper handle section ends over the lower handle so the sections nest together (Fig. 3).

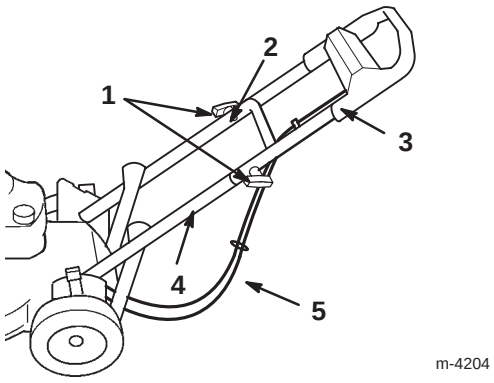

Figure 3

1. Knobs
2. Contoured-handle bolt (2)
3. Upper handle
4. Lower handle
5. Cables

6. Ensure that the cables are routed below and behind the lower handle as illustrated in Figure 3.

7. Secure the upper handle to the lower handle using 2 contoured-handle bolts and 2 knobs (Fig. 3).

Installing the Starter Rope

Pull the starter rope through the rope guide on the handle (Fig. 4).

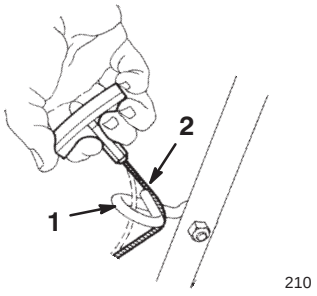

Figure 4

1. Rope guide
2. Starter rope

Installing the Discharge Tunnel Plug

1. Stop the engine and wait for all moving parts to stop.

2. Open the discharge door by moving it rearward (Fig. 5).

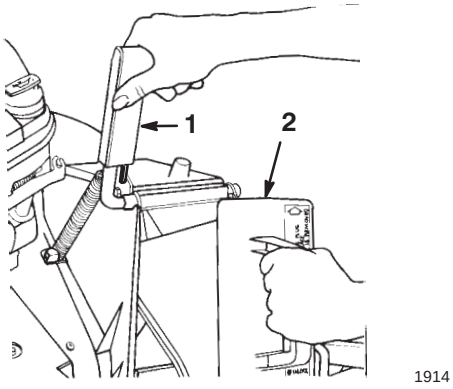

Figure 5

1. Discharge door handle
2. Discharge tunnel plug

3. Hold the discharge door handle to prevent the spring-loaded door from closing while you insert the discharge tunnel plug.

4. Rotate the plug clockwise slightly while inserting it (Fig. 5).

Note: Ensure that the arrow on the plug decal points upward.

5. Push the plug all the way in until the spring clip on the bottom of the plug clicks into place (Fig. 6).

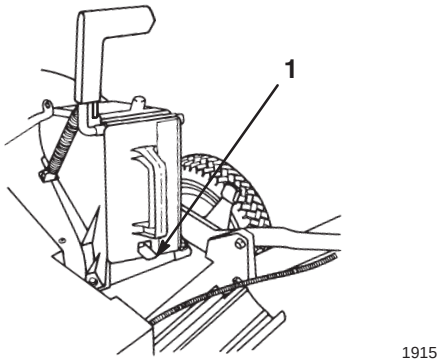

Figure 6

1. Spring clip

6. Release the discharge door handle to lock the top of the plug.

Installing the Fuse

Electric-start Model only

The fuse protects the electric start system. If the battery does not charge or the engine does not turn with the electric starter, the fuse may be blown. Use a 40-amp plug-in type fuse.

1. Remove the battery box cover (Fig. 7).

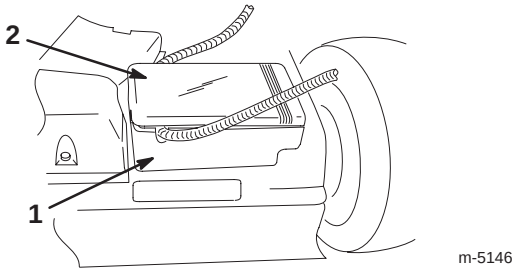

Figure 7

1. Battery box
2. Battery box cover

Note: Use a flat-head screw driver to unclip the battery cover (Fig. 8). Unclip both ends of the battery cover before removing it to prevent damaging it.

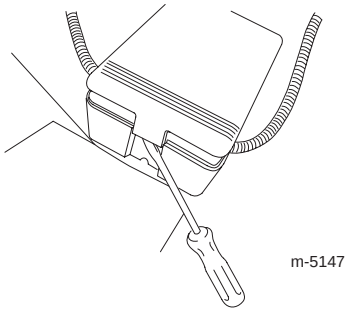

Figure 8

2. Install the fuse in the fuse holder as shown in Figure 9.

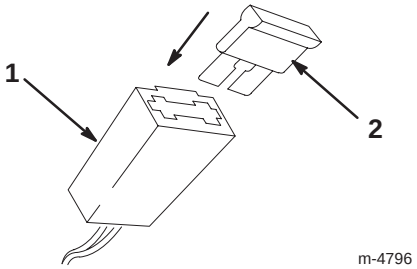

Figure 9

1. Fuse Holder
2. Fuse

3. Install the battery box cover.

Before Starting

Filling the Crankcase with Oil

The crankcase can hold 22 ounces (0.65 liters) of oil. Use only high-quality, SAE 30 or SAE 10W30 weight detergent oil that has the American Petroleum Institute (API) service classification SF, SG, SH, or SJ.

Before each use, ensure that the oil level is between the Add and the Full marks on the dipstick (Fig. 10).

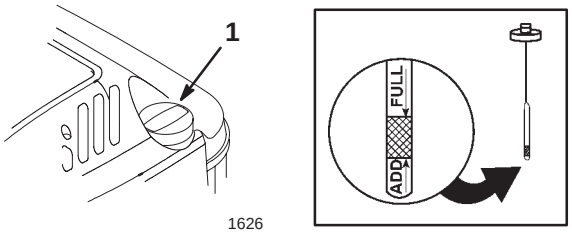

Figure 10

1. Dipstick

To add oil:

1. Move the lawn mower to a level surface.

2. Clean around the dipstick (Fig. 10).

3. Remove the dipstick by rotating the cap counterclockwise and pulling it out.

4. Wipe the dipstick clean with a clean cloth.

5. Fully insert the dipstick into the filler neck, then remove it.

Note: To ensure an accurate oil level reading, you must fully install the dipstick.

6. Read the oil level on the dipstick (Fig. 10).

7. If the oil level reading is below the Add mark on the dipstick, **slowly** pour only enough oil into the filler hole to raise the oil level to the Full mark on the dipstick.

Important Do not overfill the crankcase with oil and run the engine; engine damage will result. Drain the excess oil until the oil level on the dipstick reads Full.

8. Insert the dipstick into the filler neck and rotate the cap clockwise until it is tight.

Filling the Fuel Tank with Gasoline

For best results, use clean, fresh, lead-free gasoline with an octane rating of 87 or higher. To ensure freshness, purchase only the quantity of gasoline that you expect to use in 30 days. Unleaded gasoline burns cleaner, extends engine life, and promotes good starting. You may use leaded gasoline if unleaded gasoline is not available.

Important Do not add oil to the gasoline.

Important Do not use methanol, gasoline containing methanol, gasohol containing more than 10% ethanol, premium gasoline, or white gas. Using these fuels can damage the engine's fuel system.

Important Do not use gasoline that is more than 30 days old.

Danger

In certain conditions, gasoline is extremely flammable and highly explosive. A fire or explosion from gasoline can burn you and others and can damage property.

- **Fill the fuel tank outdoors, in an open area, and when the engine is cold. Wipe up any gasoline that spills.**
- **Do not fill the fuel tank completely full. Add gasoline to the fuel tank until the level is 1/4 to 1/2 in. (6 to 13 mm) below the bottom of the filler neck. This empty space in the tank allows the gasoline to expand.**
- **Never smoke when handling gasoline, and stay away from an open flame or where a spark may ignite the gasoline fumes.**
- **Store gasoline in an approved fuel container and keep it out of the reach of children.**
- **Never buy more than a 30-day supply of gasoline.**

Danger

When fueling, under certain circumstances, a static charge can develop, igniting the gasoline. A fire or explosion from gasoline can burn you and others and damage property.

- **Always place gasoline containers on the ground and away from your vehicle before filling.**
- **Do not fill gasoline containers inside a vehicle or on a truck or trailer bed because interior carpets or plastic truck bed liners may insulate the container and slow the loss of any static charge.**
- **When practical, remove gasoline-powered equipment from the truck or trailer and refuel the equipment with its wheels on the round.**
- **If this is not possible, then refuel such equipment on a truck or trailer from a portable container, not from a gasoline dispenser nozzle.**
- **If you must use a gasoline dispenser nozzle, keep the nozzle in contact with the rim of the fuel tank or container opening at all times until fueling is complete.**

Use a fuel stabilizer/conditioner regularly during operation and storage. A stabilizer/conditioner cleans the engine during operation and prevents gum-like varnish deposits from forming in the engine during periods of storage.

Important Do not use fuel additives other than a fuel stabilizer/conditioner. Do not use fuel stabilizers with an alcohol base such as ethanol, methanol, or isopropanol.

1. Clean around the fuel tank cap (Fig. 11).

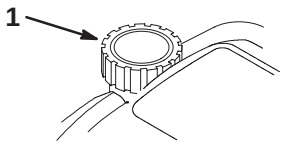

1626

Figure 11

1. Fuel tank cap

2. Remove the cap from the tank.

3. Fill the fuel tank with unleaded gasoline to within 1/4 to 1/2 in. (6 to 13 mm) from the top of the tank. **Do not fill into the filler neck.**

4. Install the fuel tank cap and wipe up any spilled gasoline.

Reviewing the Maintenance Schedule

Review the Recommended Maintenance Schedule on page 14. You may need to perform one or more additional procedures before or soon after you begin operating the lawn mower.

Operation

Note: Determine the left and right sides of the machine from the normal operating position.

Each time before you mow, ensure that the self-propel drive (self-propel model only) and the blade control bail operate properly. When you release the blade control bail, the engine and the self-propel drive should stop. If they do not, contact an Authorized Service Dealer.

Controls

The starter handle and the blade control bail are on the upper handle as shown in Figure 12.

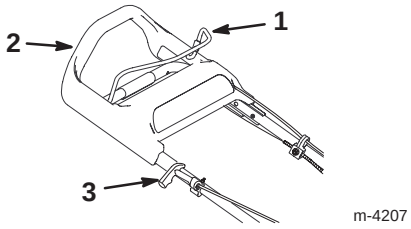

Figure 12

1. Blade control bail
2. Upper handle
3. Starter handle

Starting the Engine

1. Connect the wire to the spark plug (Fig. 13).

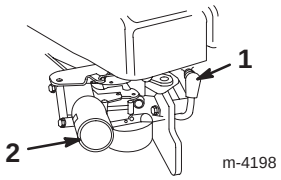

Figure 13

1. Spark-plug wire
2. Primer

2. Push in the primer 3 times, waiting one second between each push (Fig. 13).

Note: If the temperature is 55°F (13°C) or below, push in the primer 5 times, waiting one second between each push.

Note: Do not use the primer to start a warm engine after a brief shutdown. However, cool weather may require you to prime the engine again.

3. Hold the blade control bail against the upper handle (Fig. 14).

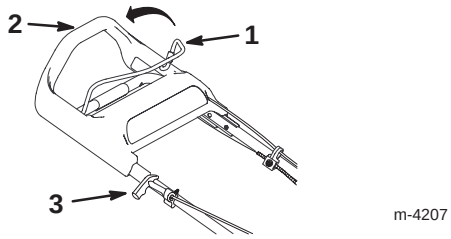

Figure 14

1. Blade control bail
2. Upper handle
3. Starter handle

4. Start the lawn mower.

- **Manual Starting**—Pull the starter handle lightly until you feel resistance, then pull it sharply (Fig. 12). Allow the rope to return to the handle slowly.
- **Electric Starting (electric-start model only)**—Insert the key into the switch. Turn the key to the right and release it when the engine starts (Fig. 15).

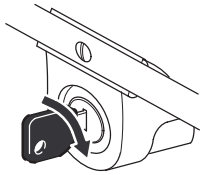

Figure 15

Note: If the battery charge is too low to start the engine, start the engine manually.

Note: If the engine fails to start after 3 attempts, repeat steps 2 through 4.

Stopping the Engine

Release the blade control bail. Both the engine and the blade should stop. If they do not stop properly, contact your Authorized Service Dealer.

Using the Self-propel Drive

To operate the self-propel drive, simply walk forward with your hands on the upper handle and your elbows at your sides, and the lawn mower will automatically keep pace with you. The faster you walk, the farther the handle will slide and the faster the lawn mower will propel (Fig. 16).

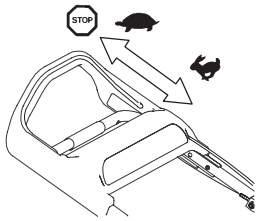

m-4206

Figure 16

To slow down the drive, simply slow your walking speed; to stop the drive, stop walking (Fig. 16).

Note: If, when backing up after self-propelling, the lawn mower does not roll backward freely, nudge the lawn mower forward about an inch without engaging the self-propel drive, then pull the lawn mower backward.

Adjusting the Cutting Height

The *SmartWheel*™ has 2 cutting scales: *Sparse/Normal* and *Lush*—to ensure the best cutting height setting in any mowing condition (Fig. 17). Use the *Sparse/Normal* scale during the warm summer season for the majority of your mowing. The *Lush* scale is for thick, moist, and succulent grass that grows most often in the spring.

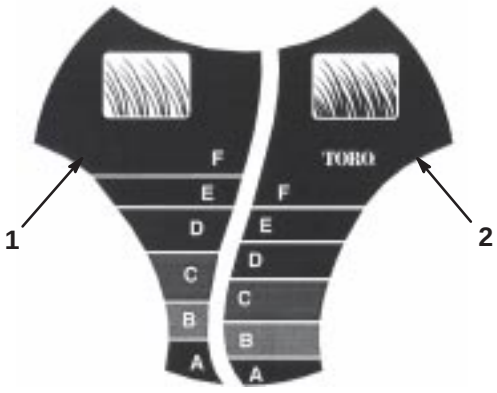

Figure 17

1. Sparse/normal grass cutting scale
2. Lush grass cutting scale

Toro recommends the following:

- Cut the grass at the **D**, **E**, or **F** settings or keep the grass between 2 to 3 inches (5.1 to 7.6 cm) high.
- Do not cut below the **D** setting unless the grass is sparse or it is late fall when grass growth begins to slow down. When you cut long grass, use a higher cutting height setting and walk slower; then cut the grass again at a normal setting. Mowing the grass when it is too long can plug the lawn mower and cause the engine to stall.

Note: The *SmartWheel* calculates the proper setting to ensure that you cut no more than a third of the grass blade.

Danger

Adjusting the cutting height levers could bring your hands into contact with a moving blade and result in serious injury.

- **Stop the engine and wait for all movement to stop before adjusting the cutting height.**
- **Do not put fingers under the housing when adjusting the cutting height.**

1. Stop the engine and wait for all moving parts to stop.
2. Move the lawn mower into the grass; stop moving the lawn mower when the *SmartWheel* design on one of the rear wheels is upright (Fig. 17).
3. Use the *SmartWheel* design to compare the tips of the grass blades to the letters on the wheel. The letter on the *SmartWheel* that matches the tips of the grass blades is the proper cutting height.
4. Squeeze the cutting height lever toward the wheel and move it to the corresponding letter on the lawn mower housing (Fig. 18).

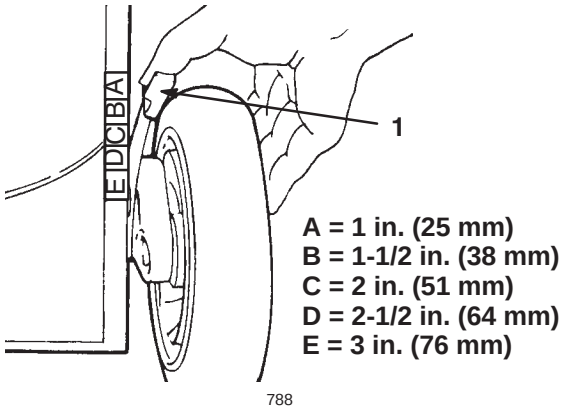

788

Figure 18

1. Cutting height

Note: For easier adjustment, lift up the housing so that the wheel is off the ground. **Do not put your fingers under the housing when you lift up the lawn mower.**

5. Ensure that the pin on the cutting height lever engages the slot in the housing.

6. Adjust all the wheels to the same letter setting.

Note: You can adjust the front wheels to 1/2 inch (1.3 cm). Move the cutting height lever past the **A** setting and release the pin into the slot in the housing.

Using the Grass Bag

Occasionally, you may want to use the grass bag for bagging lush grass or collecting leaves.

Installing the Grass Bag

1. Stop the engine and wait for all moving parts to stop.
2. Ensure that the discharge door handle is fully forward and that the pin is contacting the catch (Fig. 19).

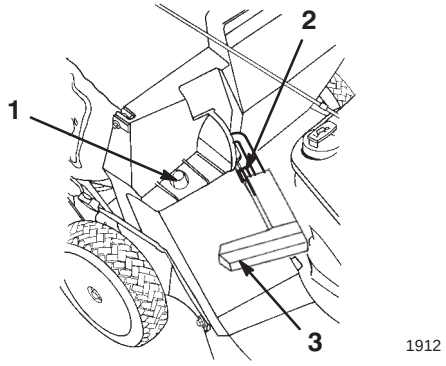

Figure 19

1. Bag frame on retaining post
2. Pin contacting catch
3. Handle fully forward and discharge door closed

3. Slide the hole in the bag frame onto the retaining post on the housing (Fig. 19).
4. Set the rear of the grass bag frame onto the lower handle.
5. Pull the discharge door handle forward and then move it rearward until the pin locks in the bag notch (Fig. 20).

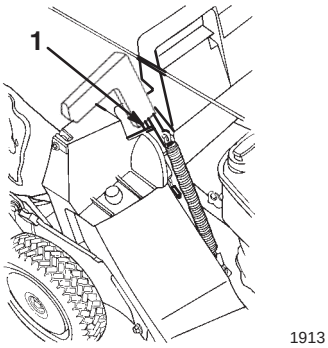

Figure 20

1. Pin locked in bag notch

Note: The discharge door in the lawn mower housing is now open.

Mowing with the Grass Bag

Warning

A worn grass bag could allow small stones and other similar debris to be thrown in the operator's or bystander's direction and result in serious personal injury or death to the operator or bystanders.

Check the grass bag frequently. If it is damaged, install a new Toro replacement bag.

Cut the grass until the bag is full.

Important Do not overfill the bag.

Removing the Grass Bag

1. Stop the engine and wait for all moving parts to stop.
2. Raise the discharge door handle and move it forward until the locking pin contacts the catch (Fig. 19).
3. Grasp the handle at the front and the rear of the bag and lift the bag off the lawn mower.
4. Gradually tip the bag forward to empty the clippings.
5. To install the bag, refer to steps 3 through 5 of Installing the Grass Bag earlier in this section.

Danger

If the discharge door does not close completely, the lawn mower could throw objects, causing serious personal injury or death.

If you cannot close the discharge door because the grass clippings clog the discharge area, stop the engine, wait for all moving parts to stop, and gently move the discharge door handle back and forth until you can close the discharge door completely. If you still cannot close the discharge door, remove the obstruction with a stick, not your hand.

Operating Tips

- Review the safety instructions and read this manual carefully before operating the lawn mower.
- Clear the area of sticks, stones, wire, branches, and other debris that the blade could hit and throw.
- Keep everyone, especially children and pets, away from the area of operation.
- Avoid striking trees, walls, curbs, or other solid objects. Never deliberately mow over any object.
- If the lawn mower strikes an object or starts to vibrate, immediately stop the engine, disconnect the wire from the spark plug, and examine the lawn mower for damage.
- Maintain a **sharp blade** throughout the cutting season. Periodically file down nicks on the blade.
- Replace the blade when necessary with an original Toro replacement blade.
- Mow only dry grass or leaves. Wet grass and leaves tend to clump on the yard and can cause the lawn mower to plug or the engine to stall.

Warning

Wet grass or leaves can cause you to slip and contact the blade, resulting in serious injury.

Mow only in dry conditions.

- Clean the underside of the lawn mower deck after each mowing. See Cleaning the Underside of the Lawn Mower Housing on page 15.
- Keep the engine in good running condition.
- Set the engine speed to the fastest position for the best cutting results.

Warning

Operating a lawn mower with its engine running at a speed greater than the factory setting can cause the lawn mower to throw a part of the blade or engine into the operator's or bystander's area and result in serious personal injury or death.

- **Do not change the engine speed setting.**
- **If you suspect the engine speed is faster than normal, contact an Authorized Service Dealer.**

- Clean the air filter frequently. Recycling stirs up more clippings and dust which clogs the air filter and reduces engine performance.

Cutting Grass

- Grass grows at different rates at different times of the year. In the summer heat, it is best to cut grass at the C, D, or E cutting height settings. Cut only about a third of the grass blade at a time. Do not cut below the 2-inch (51 mm) setting unless the grass is sparse or it is late fall when grass growth begins to slow down.
- When cutting grass over 6 inches (15 cm) tall, first mow at the highest cutting height setting and walk slower; then mow again at a lower setting for the best lawn appearance. If the grass is too long and the leaves clump on top of the lawn, the lawn mower may plug and cause the engine to stall.
- Alternate the mowing direction. This helps disperse the clippings over the lawn for even fertilization.

If the finished lawn appearance is unsatisfactory, try one or more of the following:

- Sharpen the blade.
- Walk at a slower pace while mowing.
- Raise the cutting height on your lawn mower.
- Cut the grass more frequently.
- Overlap cutting swaths instead of cutting a full swath with each pass.
- Set the cutting height on the front wheels one notch lower than the rear wheels. For example, set the front wheels at the C setting and the rear wheels at the D setting.

Cutting Leaves

- After cutting the lawn, ensure that half of the lawn shows through the cut leaf cover. You may need to make more than one pass over the leaves.
- For light leaf coverage, set all the wheels at the same cutting height setting.

- If there are more than 5 inches (12.7 cm) of leaves on the lawn, set the front cutting height one or 2 notches higher than the rear cutting height. This makes it easier to feed the leaves under the lawn mower deck.
- Slow down your mowing speed if the lawn mower does not cut the leaves finely enough.
- If you mow over oak leaves, you can add lime to the grass in the spring to reduce the acidity of the oak leaves.

Maintenance

Note: Determine the left and right sides of the machine from the normal operating position.

Recommended Maintenance Schedule

Maintenance Service Interval	Maintenance Procedure
Each Use	• Check the engine oil level. Refer to Checking the Engine Oil Level on page 15. • Check the stopping time of the blade brake. The blade must stop within 3 seconds of releasing the bail; if it does not, contact an Authorized Service Dealer for repair. • Remove grass clippings and dirt from under the housing. Refer to Cleaning the Underside of the Lawn Mower Housing on page 15. • Clean the discharge tunnel and plug. Refer to Cleaning the Discharge Tunnel and Plug on page 16.
5 Hours	• Check the blade and the engine mounting fasteners. Tighten them if they are loose.
25 Hours	• Clean the air filter pre-cleaner, and replace the paper air filter; replace the paper air filter more frequently in dusty or dirty operating conditions. Refer to Servicing the Air Filter on page 16. • Inspect the spark plug and replace it if necessary. Refer to Servicing the Spark Plug on page 17. • Adjust the self-propel drive cable and grease the rear axle fittings. Refer to Adjusting the Self-propel Drive Cable on page 17 and to Lubricating the Wheels on page 17.
50 Hours	• Change the engine oil.[1] Refer to Changing the Engine Oil on page 18. • Sharpen or replace the blade; maintain it more frequently if the edge dulls quickly in rough or in sandy conditions. Refer to Maintaining the Blade on page 19. • Check for leaks in the fuel system and/or a deteriorating fuel hose. Replace parts if necessary. • Remove grass clippings and debris from under the belt cover. Refer to Cleaning under the Belt Cover on page 21.
100 Hours	• Clean the cooling system. Refer to Cleaning the Cooling System on page 21.
Storage	• Charge the battery monthly and before storage (electric-start model only). Refer to Charging the Battery on page 21. • Empty the fuel tank before repairs as directed or before storage. Refer to Emptying the Fuel Tank on page 21.

[1]Change the engine oil after the first 5 operating hours. Change the engine oil after every 25 operating hours in dusty conditions or in high temperatures.

Important Refer to your engine operator's manual for additional maintenance procedures.

Caution

If you leave the wire on the spark plug, someone could accidently start the engine and seriously injure you or other bystanders.

Disconnect the wire from the spark plug before you do any maintenance. Set the wire aside so that it does not accidentally contact the spark plug.

Checking the Engine Oil Level

Before you use the lawn mower, ensure that the oil level is between the Add and the Full marks as shown on the dipstick (Fig. 10). If the oil level is below the Add mark, add oil. Refer to Filling the Crankcase with Oil on page 8.

Cleaning under the Lawn Mower Housing

Keep the underside of the lawn mower housing clean. Be especially careful to keep the kickers free of debris (Fig. 21).

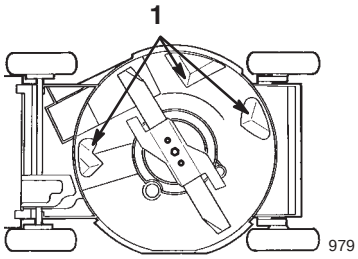

Figure 21

1. Kicker plates

Washing Method

1. Move the lawn mower onto a flat paved surface near a water hose.
2. Attach a quick-disconnect coupling (sold separately) to the end of the water hose.
3. Attach the coupling to the lawn mower washout fitting (Fig. 22).

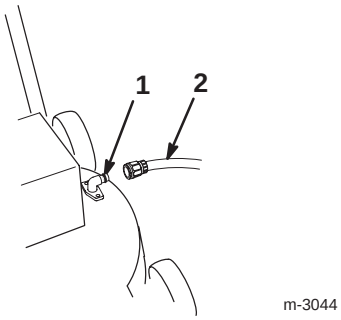

Figure 22

1. Washout fitting
2. Hose

4. Turn the water on high.
5. Start the engine.
6. Let the lawn mower run for 2 minutes.
7. Stop the engine and wait for all moving parts to stop.
8. Turn the water off.
9. Remove the coupling from the washout fitting.
10. Move the lawn mower to a dry area, and let the engine run for one minute to dry out the lawn mower and its components.
11. Stop the engine and wait for all moving parts to stop.

If the underside of the lawn mower deck has excessive grass buildup, wait 30 minutes and repeat steps 2 through 11 above.

Warning

A broken or missing washout fitting could expose you and others to thrown objects or to the blade, causing injury or death.

- **Replace a broken or missing washout fitting immediately before using the lawn mower again.**
- **Plug any holes in the lawn mower with bolts and locknuts.**
- **Never put your hands or feet under the lawn mower or through openings in the lawn mower.**

Scraping Method

Warning

Tipping the lawn mower may cause the fuel to leak from the carburetor or the fuel tank. Gasoline is extremely flammable, highly explosive and under certain conditions can cause personal injury or property damage.

Avoid fuel spills by running the engine dry or removing gasoline with a hand pump; never siphon.

If washing does not remove all the debris from under the deck, tip the lawn mower and scrape it clean.

1. Remove the grass bag.
2. Disconnect the wire from the spark plug (Fig. 13).
3. Drain the gasoline from the fuel tank. Refer to steps 3 and 4 of Emptying the Fuel Tank on page 21.
4. If the grass bag is on the lawn mower, close the door in the lawn mower housing and remove the grass bag.
5. Tip the lawn mower onto its **left** side (Fig. 21).
6. Remove the dirt and grass clippings with a hardwood or plastic scraper. Avoid burrs and sharp edges.

Important Move the blade as little as possible to avoid future starting problems.

7. Turn the lawn mower upright.
8. Connect the wire to the spark plug.

Cleaning the Discharge Tunnel and Plug

To ensure the best performance, clean the discharge tunnel and plug after each use. When the grass is thick and lush, clippings may collect on and around the plug, making it difficult to remove the plug.

Always ensure that the discharge tunnel door locks closed when you release the handle. If debris prevents the discharge door from locking closed, clean the inside of the discharge tunnel and the door thoroughly.

Servicing the Air Filter

Clean the pre-cleaner and replace the air filter once every season or every 25 operating hours; replace it more frequently in dusty operating conditions.

Important Do not operate the engine without the air filter element; extreme engine damage will occur.

1. Stop the engine and wait for all moving parts to stop.
2. Disconnect the wire from the spark plug (Fig. 13).
3. Remove the screws that secure the air filter cover (Fig. 23).

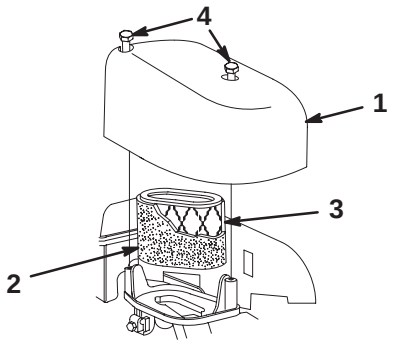

Figure 23

1. Cover
2. Foam pre–cleaner
3. Air filter
4. Screws

4. Remove the cover and clean it thoroughly (Fig. 23).
5. Remove the foam pre-cleaner.
6. Wash the pre-cleaner with a mild detergent and water, then blot it dry (Fig. 23).
7. Remove the paper air filter and discard it (Fig. 23).

Important Do not try to clean a paper air filter.

8. Insert the new paper air filter into the foam pre-cleaner (Fig. 23).
9. Install the new air filter (Fig. 23).
10. Install the cover and secure it (Fig. 23).

Servicing the Spark Plug

Check the spark plug after every 25 operating hours. Use a **Champion RC12YC** spark plug or equivalent.

1. Stop the engine and wait for all moving parts to stop.
2. Disconnect the wire from the spark plug (Fig. 13).
3. Clean around the spark plug and remove it from the cylinder head.

Important Replace a cracked, fouled, or dirty spark plug. Do not clean the electrodes because grit entering the cylinder could damage the engine.

4. Set the gap on the new plug to 0.020 in. (0.50 mm) (Fig. 24).

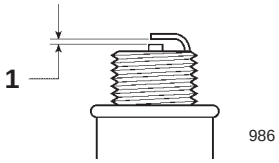

Figure 24

1. 0.020 in. (0.50 mm)

5. Install the spark plug and the gasket seal.
6. Torque the spark plug to 15 ft-lb (20 N·m).
7. Connect the wire to the spark plug.

Adjusting the Self-propel Drive Cable

Whenever you change the handle height, install a new self-propel cable, or the traction drive belt slips, adjust the self-propel drive cable.

1. Stop the engine and wait for all moving parts to stop.
2. Remove the cover.
3. Loosen the cable support nut (Fig. 25).

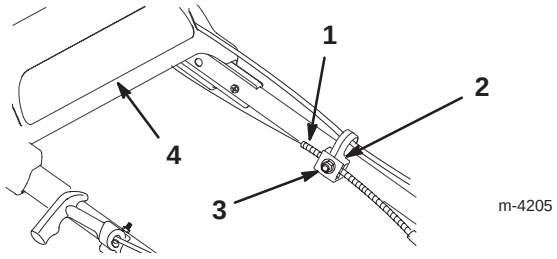

Figure 25

1. Cable jacket
2. Cable support
3. Nut
4. Upper handle

4. Push the drive bracket down until it contacts the lawn mower, then hold it in place (Fig. 26).

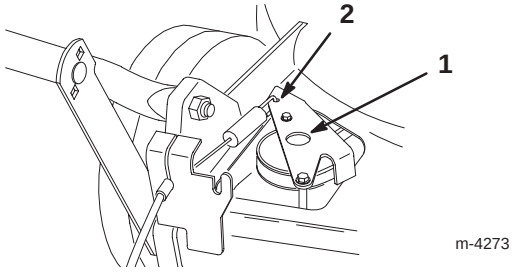

Figure 26

1. Drive bracket
2. Push here

5. With the upper handle pushed back as far as possible and while holding the drive bracket down, pull the cable jacket down (toward the lawn mower) until there is no slack in the cable (Fig. 25).
6. Tighten the nut on the cable support (Fig. 25).
7. Release the drive bracket.
8. Install the belt cover.

Lubricating the Wheels

After every 25 operating hours or at the end of the season, lubricate the front and the rear wheels.

1. Apply 2 or 3 drops of light oil on the inside of the front wheels and on the outside of all the wheel bolts.
2. Spin the wheels to distribute the oil into the bushings.
3. Wipe up any excess oil.
4. Move the rear wheel cutting height levers to the **C** setting.

5. Wipe the grease fittings with a clean rag (Fig. 27).

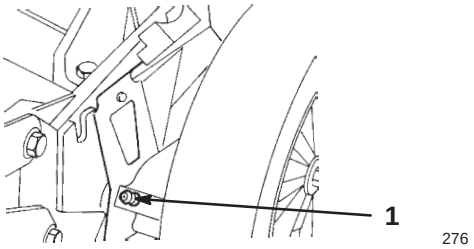

Figure 27

1. Grease fitting

6. Install a grease gun onto each fitting and gently apply 2 or 3 pumps of #2 multi-purpose lithium base grease.

Important Applying grease using excess pressure may damage the seals.

Changing the Engine Oil

Change the oil after the first 5 operating hours and then after every 50 operating hours or every season. Run the engine just before changing the oil to warm the oil. Warm oil flows better and carries more contaminants.

Note: Change the oil after every 25 operating hours when operating under heavy load or in high temperatures.

Draining the Oil above the Lawn Mower Deck (Preferred Method)

1. Remove the grass bag.
2. Disconnect the wire from the spark plug (Fig. 13).
3. Drain the gasoline from the fuel tank; refer to steps 3 and 4 of Emptying the Fuel Tank on page 21.
4. Remove the dipstick from oil fill tube and place a drain pan next to the **left** side of the lawn mower.
5. Tip the lawn mower onto its **left** side, allowing the oil to drain into the drain pan (Fig. 28).

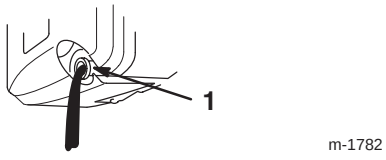

Figure 28

1. Oil fill tube

6. Turn the lawn mower upright.
7. Fill the crankcase with fresh oil to the Full mark on the dipstick. Refer to Filling the Crankcase with Oil on page 8.
8. Install the dipstick.
9. Wipe up any spilled oil.
10. Connect the wire to the spark plug.
11. Recycle the used oil according to local codes.

Draining the Oil below the Lawn Mower Deck (Optional Method)

Note: You will need a 3/8-inch ratchet extension to perform this procedure.

Warning

The blade is sharp; contacting the blade can result in serious personal injury.

Wear gloves or wrap the sharp edges of the blade with a rag.

1. Disconnect the wire from the spark plug (Fig. 13).
2. Drain the gasoline from the fuel tank; refer to steps 3 and 4 of Emptying the Fuel Tank on page 21.
3. Tip the lawn mower onto its **left** side and secure it to prevent it from falling.
4. Place a drain pan under the lawn mower.
5. Remove the oil drain plug, return the lawn mower to its operating position, and allow the oil to drain into the drain pan (Fig 29).

Note: Avoid spilling the oil on the belt.

Important You may need to move the blade to get to the oil drain plug. Move the blade as little as possible to avoid future starting problems.

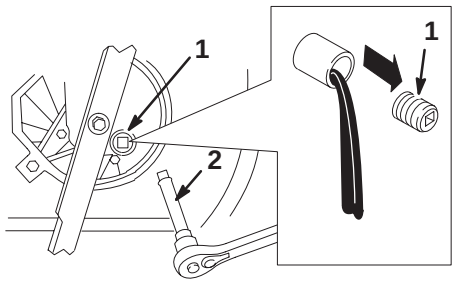

Figure 29

1. Oil drain plug
2. 3/8-inch Ratchet extension

6. Tip the lawn mower onto its **left** side and install the oil drain plug.
7. Move the oil drain pan from under the lawn mower and turn the lawn mower upright.
8. Fill the crankcase with fresh oil to the Full mark on the dipstick. Refer to Filling the Crankcase with Oil on page 8.
9. Install the dipstick.
10. Wipe up any spilled oil.
11. Connect the wire to the spark plug.
12. Recycle the used oil according to local codes.

Maintaining the Blade

A straight, sharp blade provides the best cutting performance. Regularly inspect and sharpen the blade.

Warning

The blade is sharp; contacting the blade can result in serious personal injury.

Wear gloves or wrap the sharp edges of the blade with a rag.

1. Stop the engine and wait for all moving parts to stop.
2. Disconnect the wire from the spark plug (Fig. 13).

Warning

Tipping the lawn mower may cause the fuel to leak from the carburetor or the fuel tank. Gasoline is extremely flammable, highly explosive and under certain conditions can cause personal injury or property damage.

Avoid fuel spills by running the engine dry or removing gasoline with a hand pump; never siphon.

3. Drain the gasoline from the fuel tank; refer to steps 3 and 4 of Emptying the Fuel Tank on page 21.
4. Tip the lawn mower on its **left** side (air filter up) (Fig. 30).

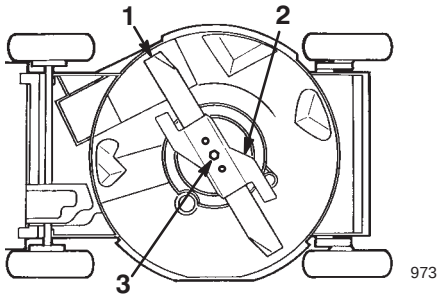

Figure 30

1. Blade
2. Accelerator
3. Blade bolt

Important Move the blade as little as possible to avoid future staring problems.

Inspecting the Blade

Carefully examine the blade for sharpness and wear, especially where the flat and the curved parts meet (Fig. 31A). Because sand and abrasive material can wear away the metal that connects the flat and curved parts of the blade, check the blade before using the lawn mower. If you notice a slot or wear (Figs. 31B and 31C), replace the blade; refer to Removing the Blade on page 20.

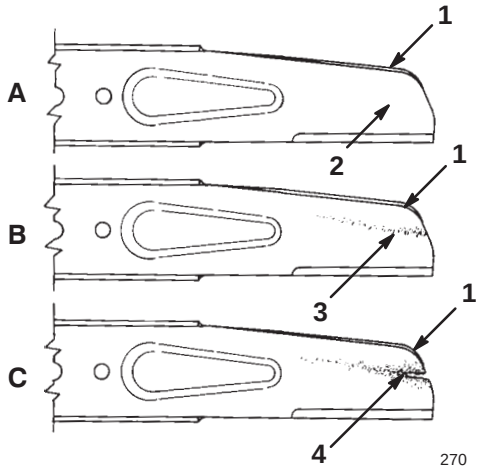

Figure 31

1. Sail
2. Flat part of blade
3. Wear
4. Slot formed

Note: For the best performance, install a new blade before the cutting season begins. During the year, file down any small nicks to maintain the cutting edge.

Danger

A worn or damaged blade can break, and a piece of the blade could be thrown into the operator's or bystander's area, resulting in serious personal injury or death.

- **Inspect the blade periodically for wear or damage.**
- **Replace a worn or damaged blade.**

Removing the Blade

1. Grasp the end of the blade using a rag or a thickly padded glove.
2. Remove the blade bolt, the accelerator, and the blade (Fig. 32).

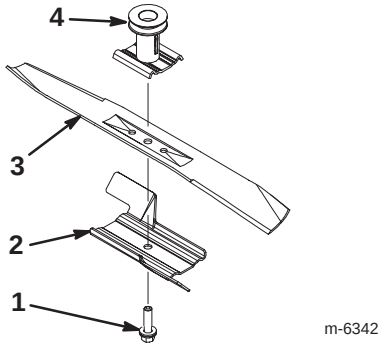

Figure 32

1. Blade bolt
2. Accelerator
3. Blade
4. Blade driver

Sharpening the Blade

File the top side of the blade to maintain its original cutting angle (Fig. 33A) and inner cutting edge radius (Fig. 33B). The blade will remain balanced if you remove the same amount of material from both cutting edges.

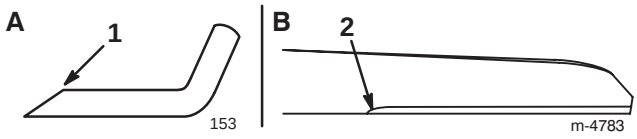

Figure 33

1. Sharpen at this angle only
2. Maintain the original radius here

Balancing the Blade

1. Check the balance of the blade by placing the center hole of the blade over a nail or screwdriver shank clamped horizontally in a vise (Fig. 34).

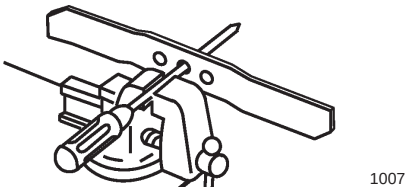

Figure 34

Note: You can also check the balance using a commercially manufactured, blade balancer.

2. If either end of the blade rotates downward, file that end (not the cutting edge or the end near the cutting edge). The blade is properly balanced when neither end drops.

Installing the Blade

1. Install a sharp, balanced Toro blade, the accelerator, and the blade bolt (Fig. 32).

   Note: The sail part of the blade must point upward (toward the top of the housing).

2. Torque the blade bolt to 60 ft-lb (82 N·m).

Warning

Operating the lawn mower without the accelerator in place can cause the blade to flex, bend, or break, resulting in serious injury or death to the operator or bystanders.

Do not operate the lawn mower without the accelerator.

3. Return the lawn mower to its upright position.
4. Connect the wire to the spark plug.

Cleaning under the Belt Cover

Keep the area under the belt cover free of debris.

1. Stop the engine and wait for all moving parts to stop.
2. Remove the bolts that secure the belt cover to the lawn mower housing (Fig. 35).

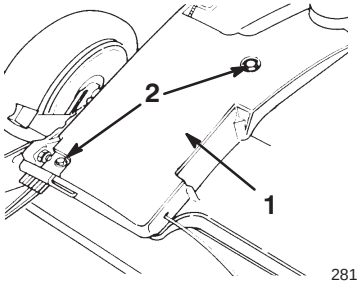

Figure 35

1. Belt cover
2. Bolts

3. Lift off the cover and brush out all the debris from the belt area.
4. Install the belt cover.

Cleaning the Cooling System

After every 100 operating hours or every season, clean the dirt and the chaff from the cylinder, the cylinder head fins, and around the carburetor and the linkage. Remove debris from the air intake slots on the recoil housing. This will ensure proper cooling and the best engine performance.

Changing the Fuse

Electric-start Model only

Refer to Installing the Fuse on page 7.

Charging the Battery

Electric-start Model only

Charge a new or stored battery for 24 continuous hours to ensure a full charge. Charge the battery for 24 hours every month (every 25 starts) or as needed.

1. Stop the engine and wait for all moving parts to stop.
2. Disconnect the wire from the spark plug (Fig. 13).
3. Remove the key from the switch.
4. Connect the lead of the battery charger (supplied with your lawn mower) to the wire harness lead.

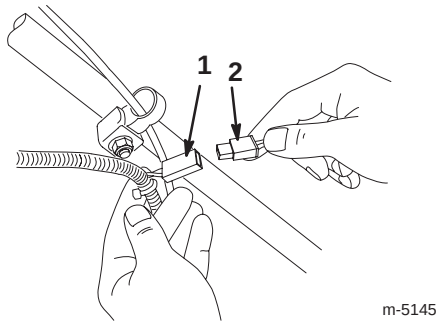

Figure 36

1. Wire harness lead
2. Battery charger lead

5. Plug the charger into a 120V AC power outlet.
6. Charge the battery for the specified time.
7. Unplug the battery charger.

   Important Use only the Toro charger; other chargers could damage the battery. Always use the charger indoors and charge the battery at room temperature (70°F or 22°C) whenever possible.
8. Connect the wire to the spark plug.

Disposing of the Battery

Electric-start Model only

Important Do not dispose of used batteries in your regular trash.

Important Recycle or dispose of a sealed lead (acid) battery according to local codes.

Incinerating, landfilling, or mixing of sealed lead (acid) batteries with the municipal solid waste stream is **prohibited by law** in most areas.

Return this battery to a federal- or state-approved sealed lead (acid) battery recycler.

Contact your local waste management officials for more information regarding the environmentally sound collection, recycling, and disposal of the battery.

Emptying the Fuel Tank

1. Stop the engine and wait for it to cool.

Important Drain gasoline from a cold engine only.

2. Disconnect the wire from the spark plug (Fig. 13).
3. Remove the cap from the fuel tank (Fig. 11).

4. Use a hand pump to pump the gasoline into a clean approved gasoline container.
5. Connect the wire to the spark plug.
6. Run the engine until it stops.
7. Start the engine again to ensure that all the gasoline is out of the carburetor.

Storage

To prepare the lawn mower for off-season storage, perform the recommended maintenance procedures. Refer to Maintenance on page 14.

Store the lawn mower in a cool, clean, dry place. Cover the lawn mower to keep it clean and protected.

Preparing the Fuel System

Warning

Gasoline can vaporize if you store it over long periods of time and explode if it comes into contact with an open flame.

- **Do not store gasoline over long periods of time.**
- **Do not store the lawn mower with gasoline in the fuel tank or the carburetor in an enclosure with an open flame. (For example, a furnace or a water heater pilot light.)**
- **Allow the engine to cool before storing it in any enclosure.**

Empty the fuel tank when mowing the last time before storing the lawn mower.

1. Run the lawn mower until the engine stops from running out of fuel.
2. Prime the engine and start it again.
3. Allow the engine to run until it stops. When you can no longer start the engine, it is sufficiently dry.

Preparing the Engine

1. While the engine is still warm, change the oil in the crankcase. Refer to Changing the Engine Oil on page 18.
2. Remove the spark plug (Fig. 13).
3. Using an oil can, add about one tablespoon of oil through the spark plug hole.
4. Slowly rotate the engine several times using the starter rope to distribute the oil.
5. Install the spark plug but *do not* connect the wire to the spark plug.

General Information

1. Clean the lawn mower housing. Refer to Cleaning the Underside of the Lawn Mower Housing on page 15.
2. Clean any dirt and chaff from the cylinder, cylinder head fins, and blower housing.
3. Remove grass clippings, dirt, and grime from the external parts of the engine, the shrouding, and the top of the lawn mower housing.
4. Check the condition of the blade. Refer to Maintaining the Blade on page 19.
5. Service the air filter; refer to Servicing the Air Filter on page 16.
6. Lubricate the self-propel drive; refer to Lubricating the Wheels on page 17.
7. Tighten all nuts, bolts, and screws.
8. Touch up all rusted or chipped paint surfaces with paint available from an Authorized Service Dealer.
9. Prepare the battery for storage. Charge the battery for 72 hours to ensure a full charge (refer to Charging the Battery on page 21), then unplug the battery charger and store the lawn mower in an unheated area. If you must store the lawn mower in a heated area, you must charge the battery every 90 days.

Removing From Storage

Warning

Folding or unfolding the handle improperly can pinch, stretch, or damage one or more of the cables. Any pinched, stretched, or damaged cable may cause an operational failure that results in an unsafe operating condition.

- **Do not pinch, stretch, or damage the cables.**
- **Handle the cables with care when folding or unfolding the handle.**
- **Do not use the lawn mower if one or more of the cables are pinched, stretched, or damaged. Contact an Authorized Service Dealer.**

1. Carefully unfold the upper handle until it nests with the lower handle, then tighten the knobs.
2. Check and tighten all fasteners.
3. Remove the spark plug (Fig. 13) and spin the engine rapidly using the starter to blow the excess oil from the cylinder.

4. Clean the spark plug or replace it if it is cracked, broken, or if the electrodes are worn.
5. Install the spark plug and torque it to 15 ft-lb (20 N·m).
6. Perform the recommended maintenance procedures; refer to Maintenance on page 14.
7. Charge the battery. Refer to Charging the Battery on page 21.
8. Fill the fuel tank with fresh, clean gasoline.
9. Check the engine oil level. Refer to Checking the Engine Oil Level on page 15.
10. Connect the wire to the spark plug.

Accessories

You may purchase the following accessories from an Authorized Service Dealer:

- Dethacher kit
- Side discharge kit
- Spark arrestor

Troubleshooting

Toro designed and built your lawn mower for trouble-free operation. Check the following components and items carefully, and refer to Maintenance on page 14 for more information. If a problem continues, contact an Authorized Service Dealer.

Problem	Possible Causes	Corrective Action
Engine does not start	1. The fuel tank is empty or the fuel system contains stale fuel.	1. Drain and/or fill the fuel tank with fresh gasoline. If the problem persists, contact an Authorized Service Dealer.
	2. The primer has not been pushed in.	2. Push the primer in 3 times.
	3. The wire is not connected to the spark plug.	3. Connect the wire to the spark plug.
	4. The spark plug is pitted, fouled, or the gap is incorrect.	4. Check the spark plug and adjust the gap if necessary. Replace the spark plug if it is pitted, fouled, or cracked.
Engine starts hard or loses power	1. The fuel tank contains stale fuel.	1. Drain and fill the fuel tank with fresh gasoline.
	2. The fuel cap vent hole is plugged.	2. Clean the fuel cap vent hole or replace the fuel cap.
	3. The air filter element is dirty and is restricting the air flow.	3. Clean the air filter pre-cleaner and/or replace the paper air filter.
	4. The underside of the lawn mower deck contains clippings and debris.	4. Clean the underside of the lawn mower deck.
	5. The spark plug is pitted, fouled, or the gap is incorrect.	5. Check the spark plug and adjust the gap if necessary. Replace the spark plug if it is pitted, fouled, or cracked.
	6. The engine oil level is low or the oil is dirty.	6. Check the engine oil. Change the oil if it is dirty or add oil if it is low.

Problem	Possible Causes	Corrective Action
Engine runs rough	1. The wire is not connected to the spark plug. 2. The spark plug is pitted, fouled, or the gap is incorrect. 3. The air filter element is dirty and is restricting the air flow.	1. Connect the wire to the spark plug. 2. Check the spark plug and adjust the gap if necessary. Replace the spark plug if it is pitted, fouled, or cracked. 3. Clean the air filter pre-cleaner and/or replace the paper air filter.
Lawn mower or engine vibrates excessively	1. The blade is bent or is out of balance. 2. The blade bolt is loose. 3. The underside of the lawn mower deck contains clippings and debris. 4. The engine mounting bolts are loose.	1. Balance the blade. If the blade is bent, replace it. 2. Tighten the blade bolt. 3. Clean the underside of the lawn mower deck. 4. Tighten the engine mounting bolts.
Uneven cutting pattern	1. All 4 wheels are not at the same height. 2. The blade is dull. 3. You are mowing in the same pattern repeatedly. 4. The underside of the lawn mower deck contains clippings and debris.	1. Set all 4 wheels to the same height. 2. Sharpen and balance the blade. 3. Change the mowing pattern. 4. Clean the underside of the lawn mower deck.
Discharge chute plugs	1. The cutting height is too low. 2. You are mowing too fast. 3. The grass is wet. 4. The underside of the lawn mower deck contains clippings and debris.	1. Raise the cutting height. 2. Slow down. 3. Allow the grass to dry before mowing. 4. Clean the underside of the lawn mower deck.
Lawn mower does not self-propel	1. The self-propel drive cable is out of adjustment or is damaged. 2. There is debris under the belt cover.	1. Adjust the self-propel drive cable. Replace the cable if necessary. 2. Clean the debris from under the belt cover.