Form No. 3437-869 Rev C

TORO®

Count on it.

Parts Catalog

# Reelmaster® 3555

## Traction Unit

**Model No. 03820—Serial No. 406700000 and Up**

Register at www.Toro.com.
Original Instructions (EN)

CE

*3437-869* C

# Ordering Replacement Parts

To order replacement parts, please supply the part number, the quantity, and the description of each part desired.

### Understanding Reference Numbers

Each identified part in an illustration has a reference number. The reference number for a part also appears in the parts list, along with other information about the part.

This catalog uses two special reference number formats, one to indicate parts in a service assembly and another to indicate the quantity of a given part in an illustration.

### Service Assembly Reference Numbers

Parts in service assemblies have reference numbers in the form a:b. The a represents the reference number of the entire service assembly and the b represents a sequential number unique to each part within the service assembly.

For example, a wheel assembly might be identified by reference number 6, the tire by 6:1, the valve by 6:2, and the wheel by 6:3. When you order the assembly identified by reference number 6, you receive all parts identified by reference numbers 6:1,6:2, and 6:3. However, you may also order any part individually. Reference numbers of this type appear in illustration and in parts lists.

### Reference Numbers Indicating Quantity

In an illustration, if a reference number indicates more than one part, the reference number has the form nX y. The n represents the quantity of the part, the X is the multiplication symbol, and the y represents the reference number.

For example, in an illustration, the reference number 2X 37 means that two of the parts identified by reference number 37 are indicated.

# Contents

Frame and Front Axle Assembly . . . 5
Engine Mount Assembly . . . 7
Muffler and Air Cleaner Assembly . . . 8
Air Cleaner Assembly No. 93-2190 . . . 9
Radiator and Oil Cooler Assembly . . . 10
No. 1, No. 4 and No. 5 Lift Arm Assembly . . . 11
Hydraulic Cylinder Assembly No. 119-6989 . . . 12
Hydraulic Cylinder Assembly No. 127-8539 . . . 13
No. 2 and No. 3 Lift Arm Assembly . . . 14
Hydraulic Cylinder Assembly No. 138-6941 . . . 15
Fuel Tank and Filter Assembly . . . 16
Hydraulic Tank and Filter Assembly . . . 17
Battery Assembly . . . 18
Seat and Heat-Shield Assembly . . . 19
Seat Assembly No. 116-3998 . . . 20
Control Panel Assembly . . . 21
Joystick Bracket Assembly No. 120-5280 . . . 22
Parking Brake Assembly . . . 23
Main Wire Harness Assembly . . . 24
Steering Arm Assembly . . . 25
Steering Valve Assembly No. 139-6002 . . . 26
Front Shroud and Floorplate Assembly . . . 27
Traction Control Assembly . . . 28
Hood and Screen Assembly . . . 29
Wheel and Brake Assembly . . . 30
Hydraulic Motor Assembly No. 110-8786 . . . 31
Hydraulic Motor Assembly No. 110-8785 . . . 32
Brake Assembly No. 127-8535 . . . 33
Rear Fork Assembly . . . 34
Steering Cylinder Assembly No. 121-7835 . . . 35
Hydraulic Motor Assembly No. 95-8694 . . . 36
Neutral Arm Assembly . . . 37
Piston Pump and Gear Pump Assembly . . . 38
Hydraulic Pump Assembly No. 104-4890 . . . 39
Hydraulic Gear Pump Assembly No. 121-7841 . . . 41
Traction Hydraulic Assembly . . . 42
Lift Hydraulic Assembly . . . 43
Lift Manifold Assembly No. 138-6998 . . . 44
Cutting Unit No. 1, 4 and 5 Hydraulic Assembly . . . 45
Mow Manifold Assembly No. 139-6025 . . . 47
Rear Mow Hydraulic Circuit Assembly . . . 48
Hydraulic Reel Motor Assembly No. 120-2072 . . . 50
Crankcase Assembly . . . 51
Oil Pan and Dipstick Assembly . . . 52
Cylinder Head Assembly . . . 53
Gear Case and Oil Filter Cartridge Assembly . . . 54
Cylinder Head Cover Assembly . . . 55
Main Bearing Case Assembly . . . 56
Camshaft and Idle Gear Shaft Assembly . . . 57
Piston and Crankshaft Assembly . . . 58
Fuel Camshaft and Governor Shaft Assembly . . . 59
Idle Apparatus and Stop Solenoid Assembly . . . 60
Injection Pump Assembly . . . 61
Governor Assembly . . . 62

**© 2023—The Toro® Company**
**8111 Lyndale Avenue South**
**Bloomington, MN 55420**



**Contact us at www.Toro.com.**
**Printed in the USA.**
**All Rights Reserved**

# Contents (continued)

Speed Control Plate Assembly . . . 63
Nozzle Holder and Glow Plug Assembly . . . 64
Nozzle Holder Assembly . . . 65
Alternator, Pulley and Fan Assembly . . . 66
Alternator Components Assembly . . . 67
Starter and Flywheel Assembly . . . 68
Starter Component Assembly . . . 69
Water Flange and Thermostat Assembly . . . 70
Water Pump Assembly . . . 71
Valve and Rocker Arm Assembly . . . 72
Inlet and Exhaust Manifold Assembly . . . 73
Miscellaneous Engine Parts . . . 74
Attachments and Accessories . . . 75

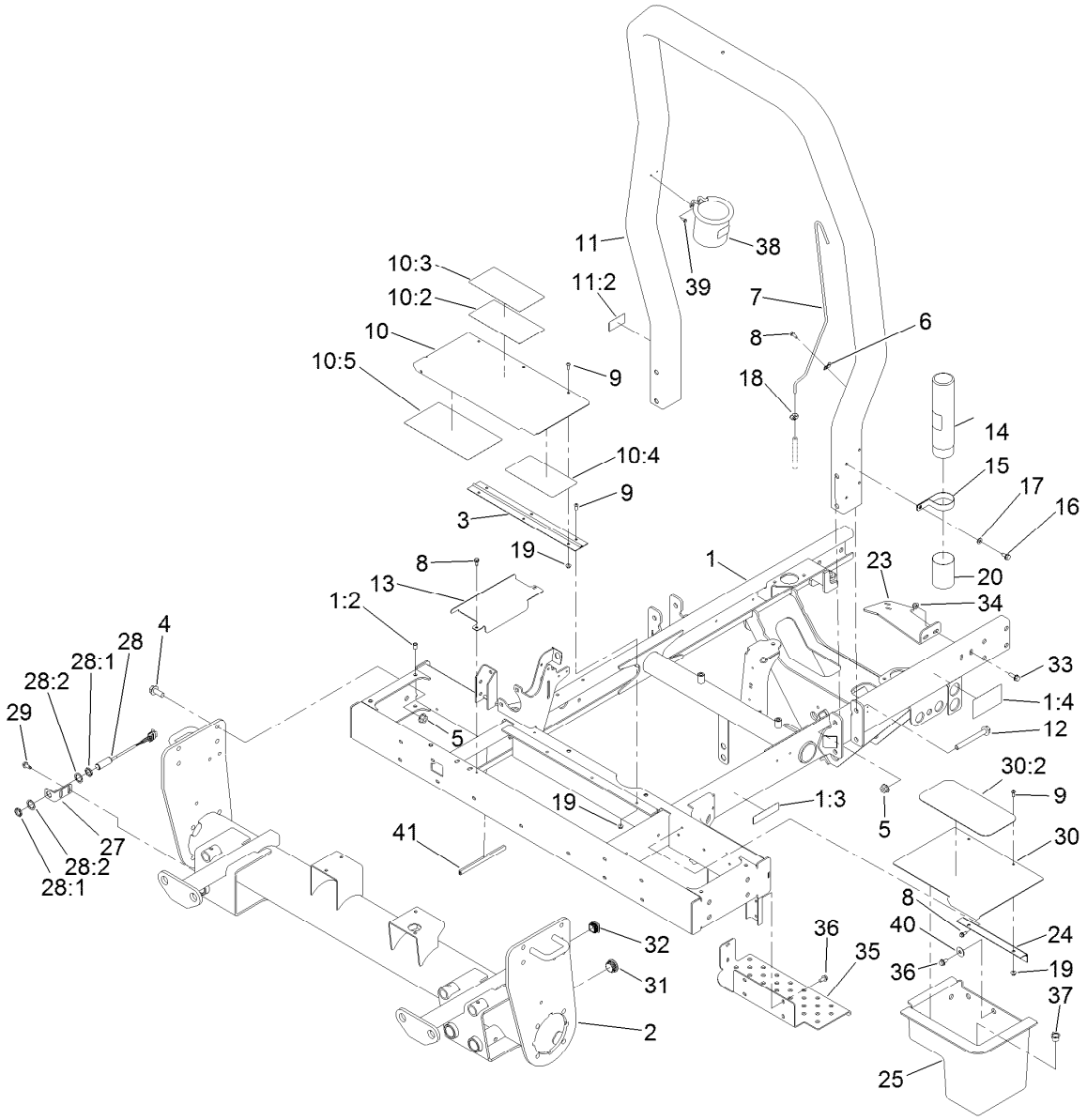


# Frame and Front Axle Assembly

| Ref. | Part Number | Qty. | Description |
|---|---|---|---|
| 1 | 133-4935 | 1 | Frame ASM |
| 1:2 | 32148-6 | 3 | Nut-Clinch |
| 1:3 | 133-8062 | 1 | Decal-Arrestor, Spark |
| 1:4 | 117-3270 | 2 | Decal-Danger |
| 2 | 127-8433-03 | 1 | Front Axle ASM |
| 3 | 127-8517 | 1 | Hinge-Toolbox |
| 4 | 3234-38 | 8 | Screw-HHF |
| 5 | 32128-49 | 12 | Nut-HHF |
| 6 | 2412-72 | 2 | Clip-Closed, Insulated |
| 7 | 95-8615 | 1 | Tube-Breather |
| 8 | 32144-10 | 6 | Screw-HWH |
| 9 | 119-6906 | 8 | Screw-HSBH |
| 10 | 127-8515 | 1 | Toolbox Cover ASM |
| 10:2 | 120-1683 | 1 | Decal-Danger |
| 10:3 | 138-1186 | 1 | Decal-Danger |
| 10:4 | 121-7884 | 1 | Decal-Reel Speed |
| 10:5 | 138-6981 | 1 | Decal-Service, Rm35Xx-D |
| 11 | 127-8493 | 1 | ROPS ASM |
| 11:2 | 127-8596 | 1 | Decal-ROPS |
| 12 | 117-3176 | 4 | Screw-HHF |
| 13 | 127-8547-01 | 1 | Cover-Battery, Inner |

| Ref. | Part Number | Qty. | Description |
|---|---|---|---|
| 14 | 104-7050 | 1 | Tube-Manual |
| 15 | 2412-133 | 2 | Clamp-R |
| 16 | 32144-70 | 2 | Screw-HWHTF |
| 17 | 3256-23 | 2 | Washer-Plain |
| 18 | 2412-108 | 1 | Clamp-Worm |
| 19 | 104-7201 | 8 | Nut-HF, NI |
| 20 | 104-7048 | 1 | Cap-Housing |
| 23 | 138-6940-03 | 1 | Bracket-Filter |
| 24 | 127-8589 | 1 | Hinge-Toolbox |
| 25 | 127-8590 | 1 | Box-Storage |
| 27 | 127-8520 | 1 | Bracket-Switch |
| 28 | 115-5300 | 1 | Proximity Switch ASM |
| 28:1 | 117-3207 | 2 | Nut-Hex |
| 28:2 | 117-3208 | 2 | Washer-Lock, Internal Tooth |
| 29 | 32104-32 | 2 | Screw-HWH |
| 30 | 127-8565 | 1 | Cover ASM |
| 30:2 | 75-0620 | 1 | Tread-Foot, LH |
| 31 | 117-0946 | 3 | Plug-Plastic |
| 32 | 110-9013 | 2 | Caplug |
| 33 | 3234-29 | 2 | Screw-HHF |
| 34 | 104-8300 | 2 | Nut-HF, NI |

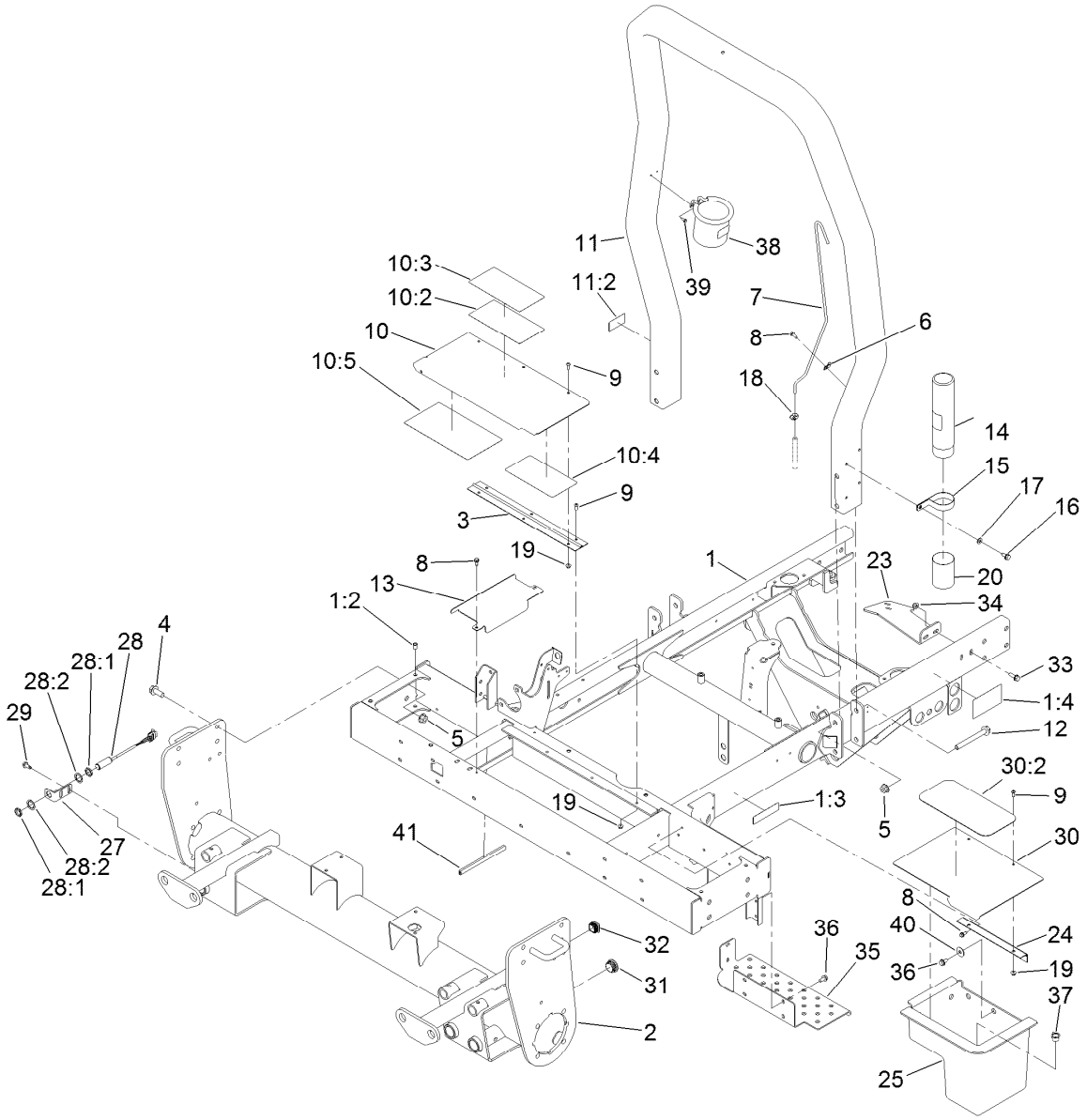


# Frame and Front Axle Assembly (continued)

| Ref. | Part Number | Qty. | Description |
|---|---|---|---|
| 35 | 127-8443-03 | 1 | Step |
| 36 | 32144-14 | 11 | Screw-HWHTF |
| 37 | 2410-72 | 1 | Caplug (L-9) |
| 38 | 117-2378 | 1 | Holder-Bag |
| 39 | 32144-1 | 2 | Screw-Taptite |
| 40 | 3256-35 | 5 | Washer-Flat |
| 41 | 127-6619 | 1 | Strip-Seal |

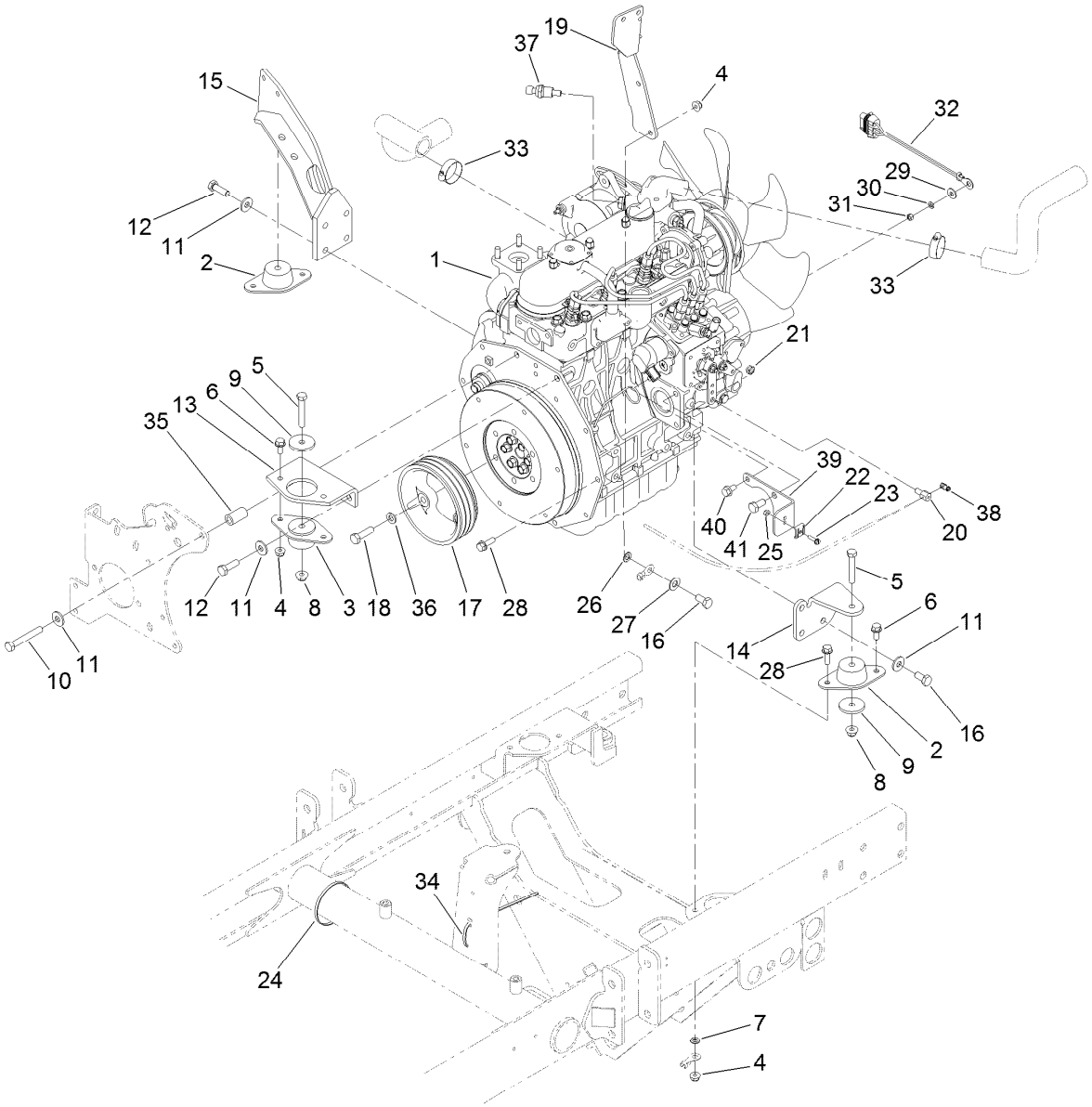


# Engine Mount Assembly

| Ref. | Part Number | Qty. | Description |
|---|---|---|---|
| 1 | 138-6908 | 1 | Engine-Kubota, D1105 |
| 2 | 121-9076 | 2 | Mount-Engine |
| 3 | 93-5265 | 1 | Mount-Engine |
| 4 | 32128-20 | 8 | Nut-HF |
| 5 | 323-11 | 3 | Screw-HH |
| 6 | 3234-5 | 5 | Screw-HHF |
| 7 | 3255-8 | 1 | Washer-Lock |
| 8 | 104-8301 | 3 | Nut-HF, NI |
| 9 | 80-8560 | 3 | Washer-Hardened |
| 10 | 42-9370 | 1 | Screw-HH |
| 11 | 80-6990 | 9 | Washer-Hardened |
| 12 | 95-8812 | 5 | Screw-HH |
| 13 | 99-3618-03 | 1 | Mount-Engine, Front |
| 14 | 95-8937-03 | 1 | Mount-Engine, LH |
| 15 | 100-4838-03 | 1 | Mount-Engine |
| 16 | 63-7790 | 4 | Screw-Cap |
| 17 | 99-3626 | 1 | Pulley-3V |
| 18 | 56-2140 | 3 | Screw-HH |
| 19 | 115-3487-03 | 1 | Bracket-Mount, Fuel Filter |
| 20 | 98-9311 | 1 | Swivel-Throttle |
| 21 | 3296-20 | 1 | Nut-Lock, NI |

| Ref. | Part Number | Qty. | Description |
|---|---|---|---|
| 22 | 81-1690 | 1 | Clamp-Cable |
| 23 | 32105-13 | 1 | Screw-HWH |
| 24 | 3290-379 | 2 | Tie-Cable |
| 25 | 3296-2 | 1 | Nut-Lock, NI |
| 26 | 3255-9 | 1 | Washer-Lock |
| 27 | 3256-25 | 1 | Washer-Flat |
| 28 | 3234-17 | 3 | Screw-HHF |
| 29 | 3256-78 | 1 | Washer-Flat |
| 30 | 43-5930 | 1 | Washer-Lock, Spring |
| 31 | 48-7890 | 1 | Nut-Hex |
| 32 | 99-3441 | 1 | Harness-Wire, Fusible Link |
| 33 | 2412-34 | 2 | Clamp-Hose |
| 34 | 3290-378 | 14 | Tie-Cable |
| 35 | 95-8736 | 1 | Spacer |
| 36 | 3256-24 | 3 | Washer-Plain |
| 37 | 119-4478 | 1 | Sender-Temperature |
| 38 | 112-9919 | 1 | Stop-Cable, Throttle |
| 39 | 110-9009-03 | 1 | Bracket-Cable, Throttle |
| 40 | 33104-016 | 1 | Screw-HHF |
| 41 | 70-8470 | 1 | Screw-HH |

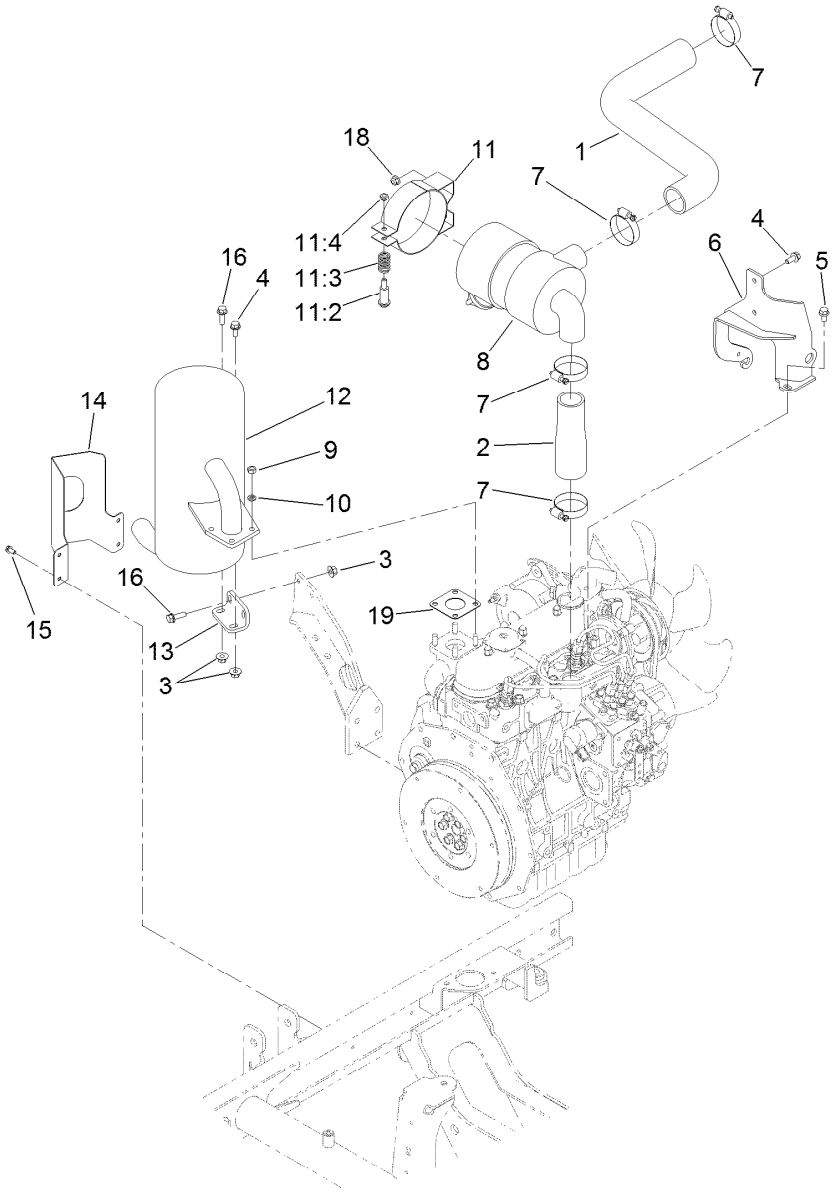


# Muffler and Air Cleaner Assembly

| Ref. | Part Number | Qty. | Description |
|---|---|---|---|
| 1 | 121-7834 | 1 | Hose-Air Intake, Upper |
| 2 | 95-8947 | 1 | Hose-Air Inlet, Lower |
| 3 | 32128-44 | 4 | Nut |
| 4 | 3234-5 | 3 | Screw-HHF |
| 5 | 33104-016 | 3 | Screw-HHF |
| 6 | 136-3154-03 | 1 | Bracket |
| 7 | 2412-92 | 4 | Clamp-Hose |
| 8 | 93-2190 | 1 | Air Cleaner ASM |
| 9 | 33014-00 | 4 | Nut-Hex |
| 10 | 3253-4 | 4 | Washer-Lock |
| 11 | 93-2191 | 1 | Air Cleaner Mounting Band ASM |

| Ref. | Part Number | Qty. | Description |
|---|---|---|---|
| 11:2 | 94-3653 | 1 | Bolt |
| 11:3 | 94-3654 | 1 | Spring |
| 11:4 | 48-9510 | 1 | *obs* Nut |
| 12 | 104-4834 | 1 | Muffler |
| 13 | 95-8943-03 | 1 | Bracket-Muffler |
| 14 | 99-3425-03 | 1 | Guard-Exhaust |
| 15 | 32144-4 | 4 | Screw-HWH |
| 16 | 3234-17 | 3 | Screw-HHF |
| 18 | 104-8300 | 2 | Nut-HF, NI |
| 19 | 98-9611 | 1 | Gasket |

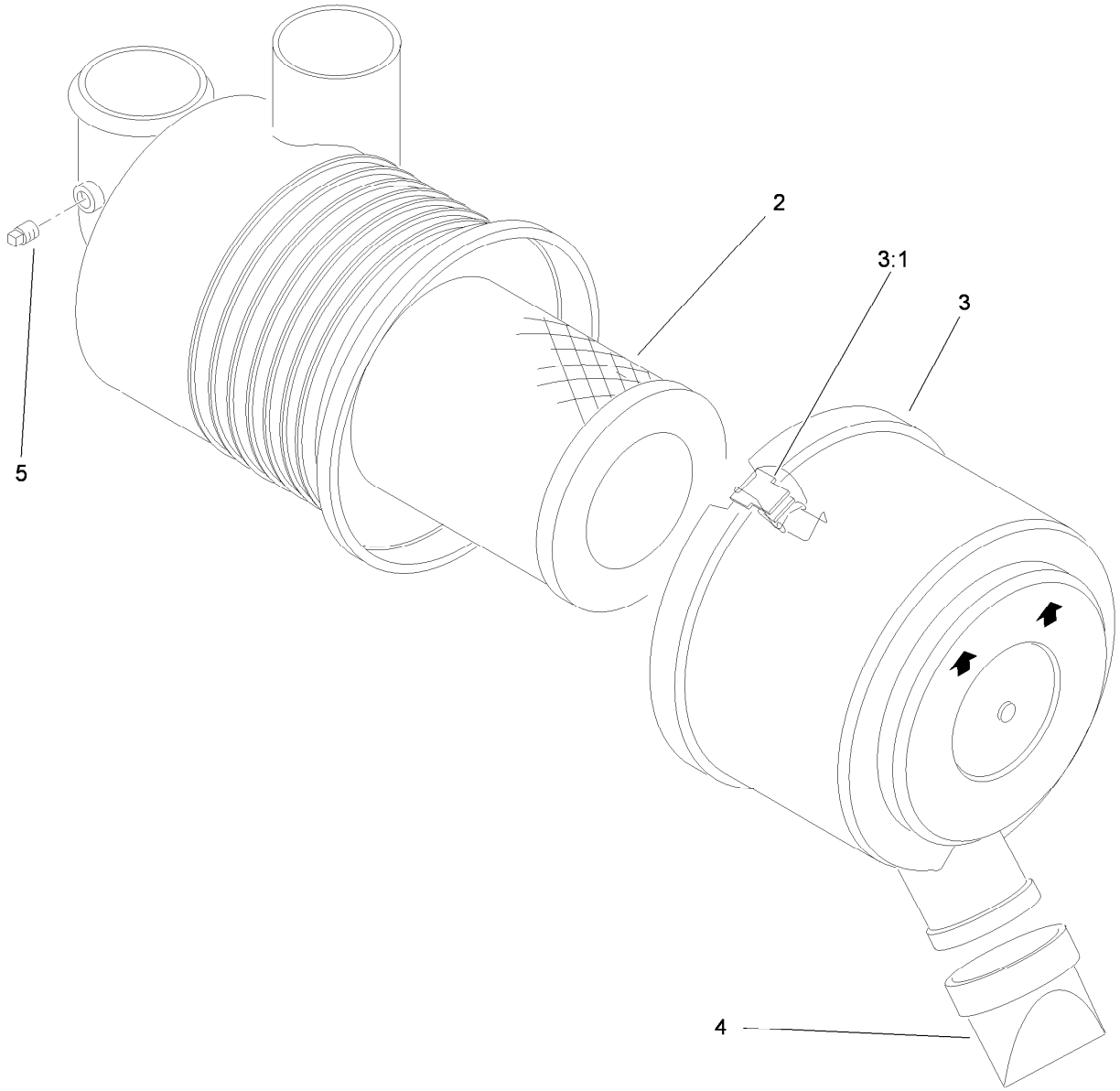


# Air Cleaner Assembly No. 93-2190

| *Ref.* | *Part Number* | *Qty.* | *Description* |
|---|---|---|---|
| 2 | 108-3811 | 1 | Filter-Air |
| 3 | 94-3652 | 1 | Cover ASM |
| 3:1 | 1-643283 | 2 | Latch-Cleaner, Air |
| 4 | 87-9400 | 1 | Valve-Vacuator |
| 5 | 285-17 | 1 | Plug-Pipe |

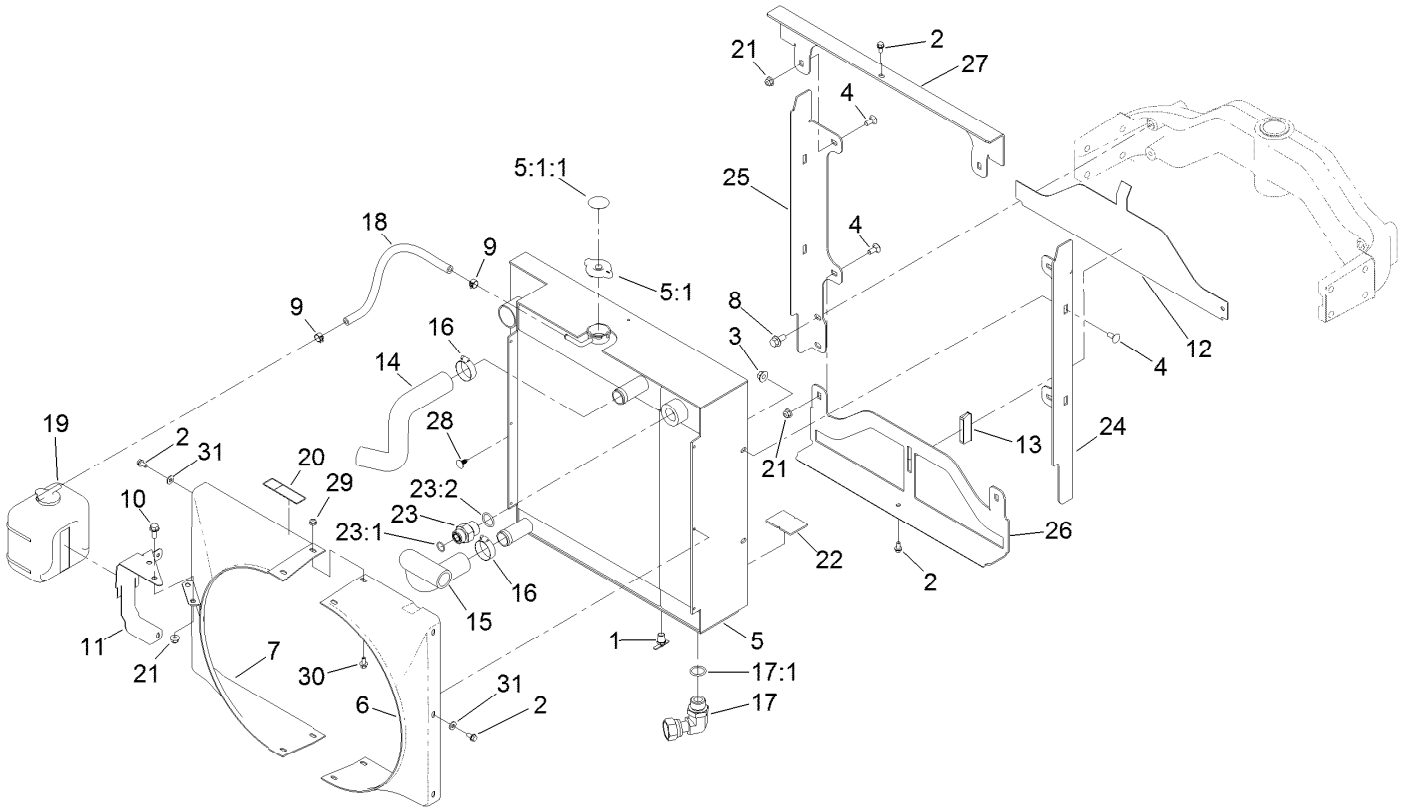


# Radiator and Oil Cooler Assembly

| Ref. | Part Number | Qty. | Description |
|---|---|---|---|
| 1 | 304-46 | 1 | Draincock |
| 2 | 32104-116 | 8 | Screw-HWHTF |
| 3 | 32128-44 | 4 | Nut |
| 4 | 3230-1 | 8 | Bolt-CARR |
| 5 | 119-2028 | 1 | Radiator And Oil Cooler ASM |
| 5:1 | 115-7766 | 1 | Cap-Radiator |
| 5:1:1 | 106-6755 | 1 | Decal-Cap, Radiator |
| 6 | 121-7853 | 1 | Shroud-LH |
| 7 | 133-4918 | 1 | Shroud-RH |
| 8 | 3234-1 | 4 | Screw-HHF |
| 9 | 92-2379 | 2 | Clamp-Hose |
| 10 | 3234-5 | 2 | Screw-HHF |
| 11 | 133-4919-03 | 1 | Bracket-Reservoir |
| 12 | 95-8702-03 | 1 | Shield-Radiator, Lower |
| 13 | 99-3497 | 1 | Magnet |
| 14 | 120-2193 | 1 | Hose-Radiator, Upper |
| 15 | 120-3353 | 1 | Hose-Radiator, Lower |
| 16 | 2412-34 | 2 | Clamp-Hose |

| Ref. | Part Number | Qty. | Description |
|---|---|---|---|
| 17 | 94-2636 | 1 | Fitting ASM |
| 17:1 | 237-81 | 1 | O-Ring |
| 18 | 109-0274 | 1 | Hose-Fuel |
| 19 | 108-0638 | 1 | Bottle-Overflow |
| 20 | 120-0627 | 1 | Decal-Warning |
| 21 | 104-8300 | 6 | Nut-HF, NI |
| 22 | 104-9459 | 2 | Seal-Foam |
| 23 | 340-8 | 1 | Fitting-Straight |
| 23:1 | 237-65 | 1 | O-Ring |
| 23:2 | 237-81 | 1 | O-Ring |
| 24 | 120-3531-03 | 1 | Bracket-Radiator, LH |
| 25 | 120-3532-03 | 1 | Bracket-Radiator, RH |
| 26 | 120-3530-03 | 1 | Bracket-Radiator, Bottom |
| 27 | 120-3529-03 | 1 | Bracket-Radiator, Top |
| 28 | 117-2382 | 2 | Plug-Plastic |
| 29 | 104-7201 | 4 | Nut-HF, NI |
| 30 | 3234-13 | 4 | Screw-HHF |
| 31 | 3256-22 | 4 | Washer-Flat |

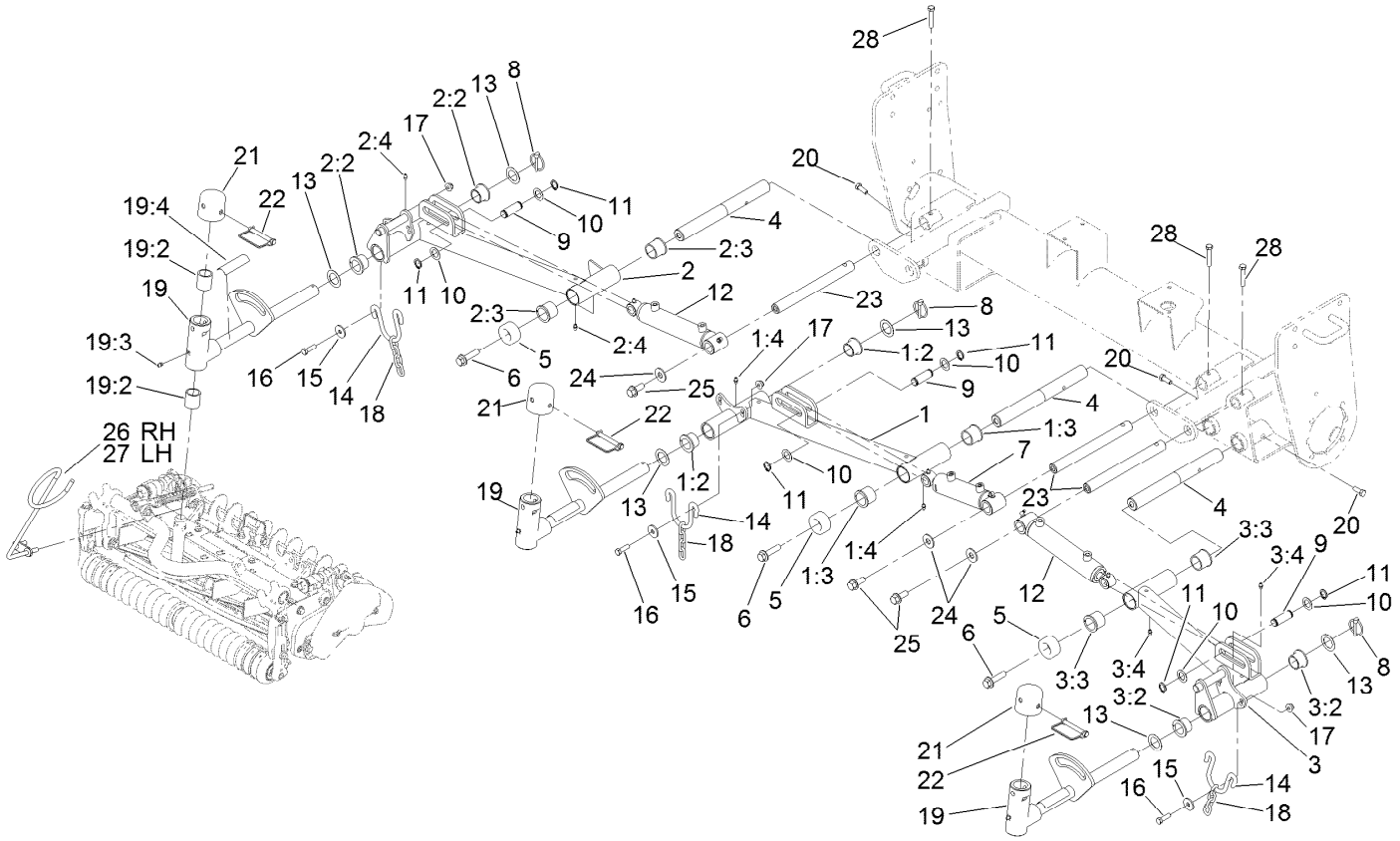


# No. 1, No. 4 and No. 5 Lift Arm Assembly

| Ref. | Part Number | Qty. | Description |
|---|---|---|---|
| 1 | 127-8461 | 1 | No. 1 Lift Arm ASM |
| 1:2 | 121-7863 | 2 | Bushing-Special |
| 1:3 | 104-0015 | 2 | Bushing-Flange |
| 1:4 | 302-5 | 2 | Fitting-Grease |
| 2 | 127-8470 | 1 | No. 5 Lift Arm ASM |
| 2:2 | 121-7863 | 2 | Bushing-Special |
| 2:3 | 104-0015 | 2 | Bushing-Flange |
| 2:4 | 302-5 | 2 | Fitting-Grease |
| 3 | 127-8468 | 1 | No. 4 Lift Arm ASM |
| 3:2 | 121-7863 | 2 | Bushing-Special |
| 3:3 | 104-0015 | 2 | Bushing-Flange |
| 3:4 | 302-5 | 2 | Fitting-Grease |
| 4 | 127-8524 | 3 | Pin-Lift Arm |
| 5 | 121-7855 | 3 | Bumper-Recessed |
| 6 | 3234-27 | 3 | Screw-HHF |
| 7 | 119-6989 | 1 | HYD Cylinder ASM |
| 8 | 92-1298 | 3 | Pin-Lynch |
| 9 | 104-0046 | 3 | Pin-Slide, Cylinder |
| 10 | 3-6498 | 6 | Washer-Thrust |
| 11 | 32120-93 | 6 | Ring-Retaining |

| Ref. | Part Number | Qty. | Description |
|---|---|---|---|
| 12 | 127-8539 | 2 | Cylinder-HYD |
| 13 | 120-2183 | 6 | Washer-Thrust |
| 14 | 120-9962 | 3 | Hoop-Chain |
| 15 | 63-8410 | 6 | Washer |
| 16 | 323-7 | 6 | Screw-HH |
| 17 | 104-8301 | 9 | Nut-HF, NI |
| 18 | 84-2450 | 3 | Chain-Straight, 4-Link |
| 19 | 127-8477 | 3 | Pivot Yoke ASM |
| 19:2 | 121-3187 | 2 | Bushing |
| 19:3 | 302-5 | 1 | Fitting-Grease |
| 19:4 | 110-9642 | 1 | Decal-Warning |
| 20 | 323-6 | 3 | Screw-HH |
| 21 | 107-4027 | 3 | Cap |
| 22 | 107-7400 | 3 | Pin-Lynch |
| 23 | 127-8540 | 3 | Pin-Cylinder |
| 24 | 3256-6 | 3 | Washer-Flat |
| 25 | 3234-32 | 3 | Screw-HHF |
| 26 | 119-3920 | 1 | Guide-Hose, RH |
| 27 | 119-3921 | 1 | Guide-Hose, LH |
| 28 | 323-10 | 3 | Screw-HH |

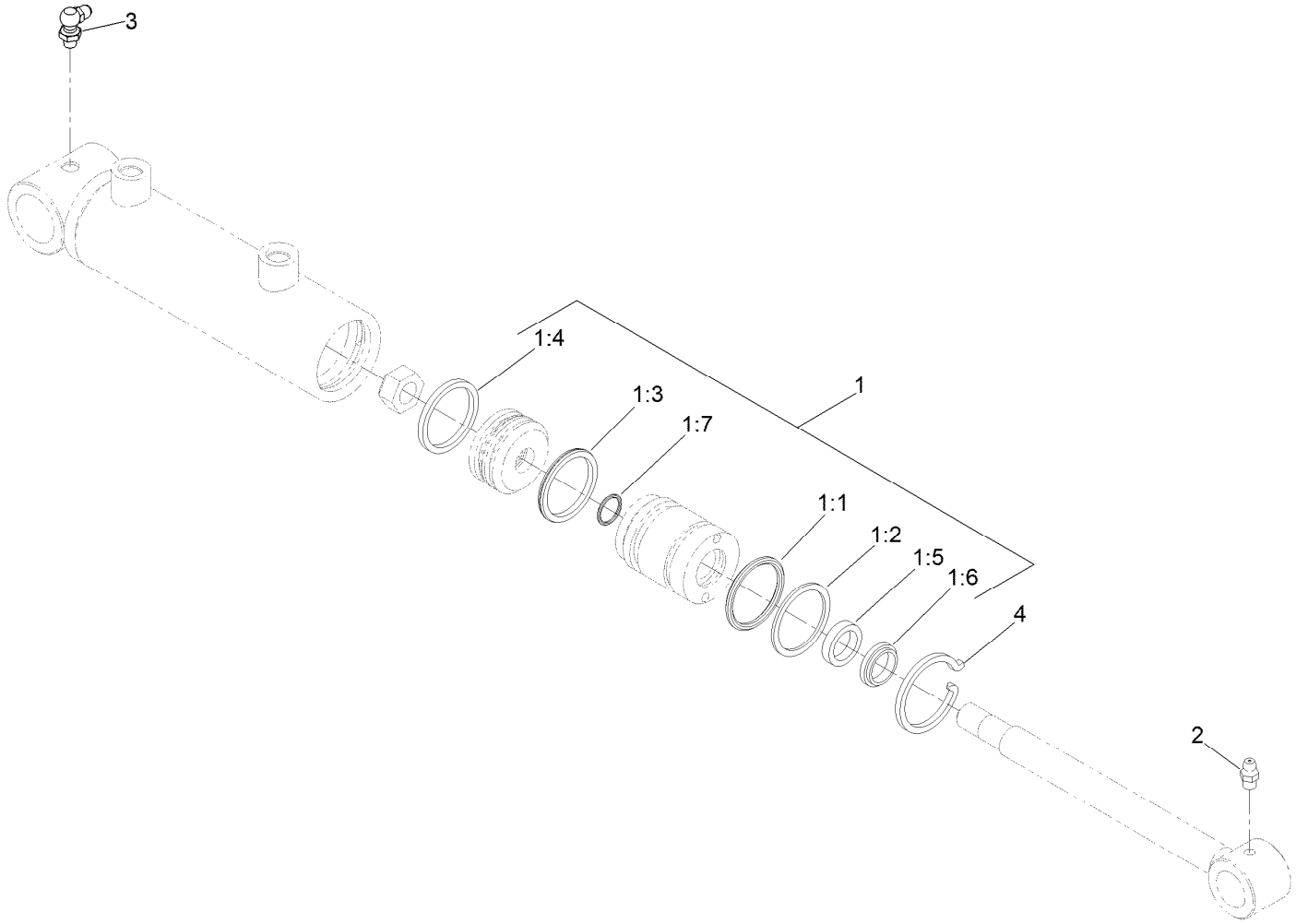


# Hydraulic Cylinder Assembly No. 119-6989

| *Ref.* | *Part Number* | *Qty.* | *Description* |
|---|---|---|---|
| 1 | 119-6992 | 1 | Seal Kit |
| 1:1 | | 1 | O-Ring ● |
| 1:2 | | 1 | Backup ● |
| 1:3 | | 1 | Bp Seal ● |
| 1:4 | | 1 | Wear Ring-Ht ● |
| 1:5 | | 1 | Bs Seal ● |
| 1:6 | | 1 | Dust Seal-Dt ● |
| 1:7 | | 1 | O-Ring ● |
| 2 | 302-5 | 1 | Fitting-Grease |
| 3 | 302-60 | 1 | Fitting-Grease |
| 4 | 84-1680 | 1 | Ring-Retaining |

● Not serviced separately

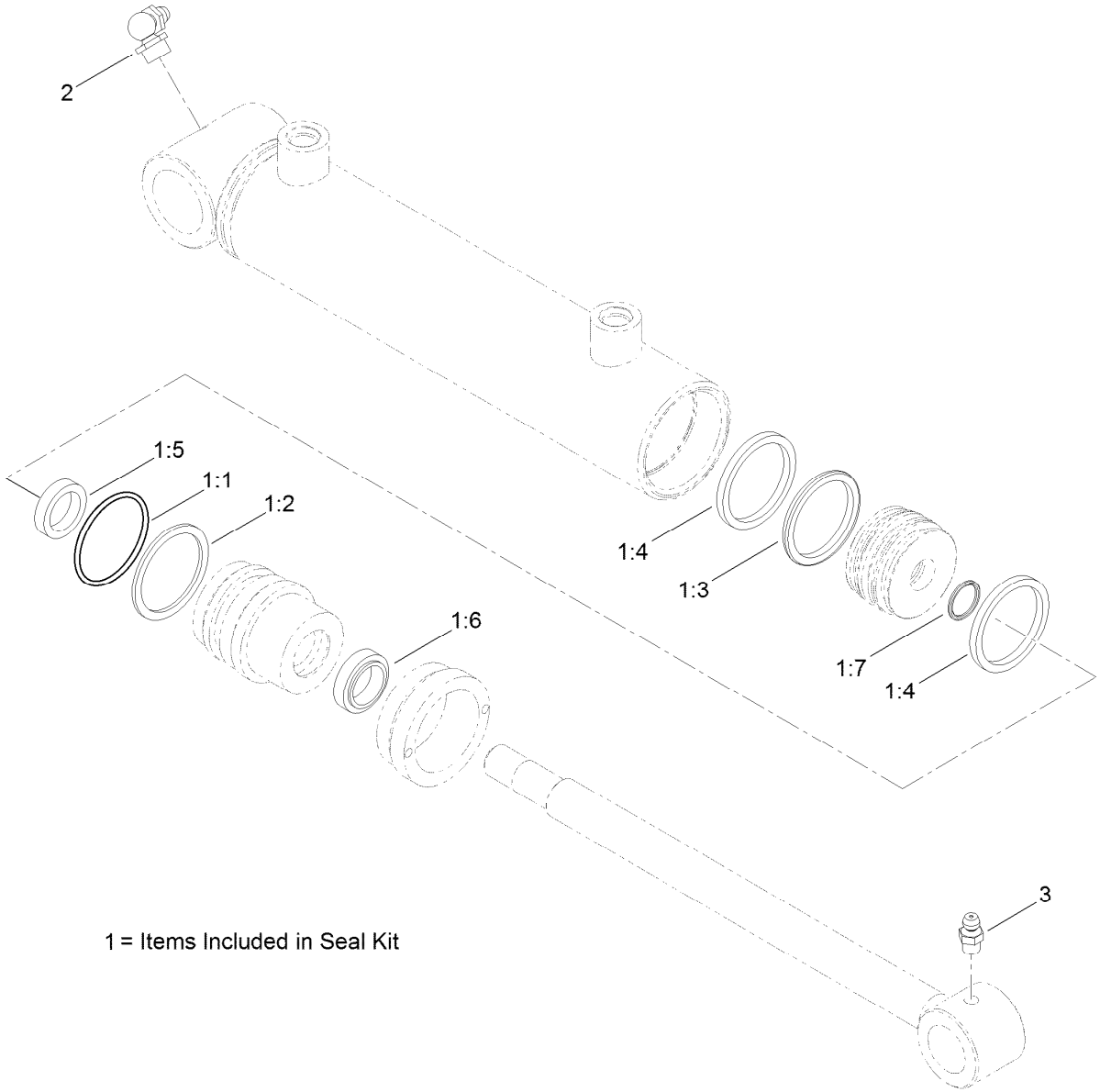


1 = Items Included in Seal Kit

# Hydraulic Cylinder Assembly No. 127-8539

| *Ref.* | *Part Number* | *Qty.* | *Description* |
|---|---|---|---|
| 1 | 127-8587 | 1 | Seal Kit |
| 1:1 | | 1 | O-Ring ● |
| 1:2 | | 1 | Backup ● |
| 1:3 | | 1 | Bp Seal ● |
| 1:4 | | 1 | Wear Ring-Ht ● |
| 1:5 | | 1 | Bt Seal ● |
| 1:6 | | 1 | Dust Seal-Dt ● |
| 1:7 | | 1 | O-Ring ● |
| 2 | 302-5 | 1 | Fitting-Grease |
| 3 | 302-60 | 1 | Fitting-Grease |

● Not serviced separately

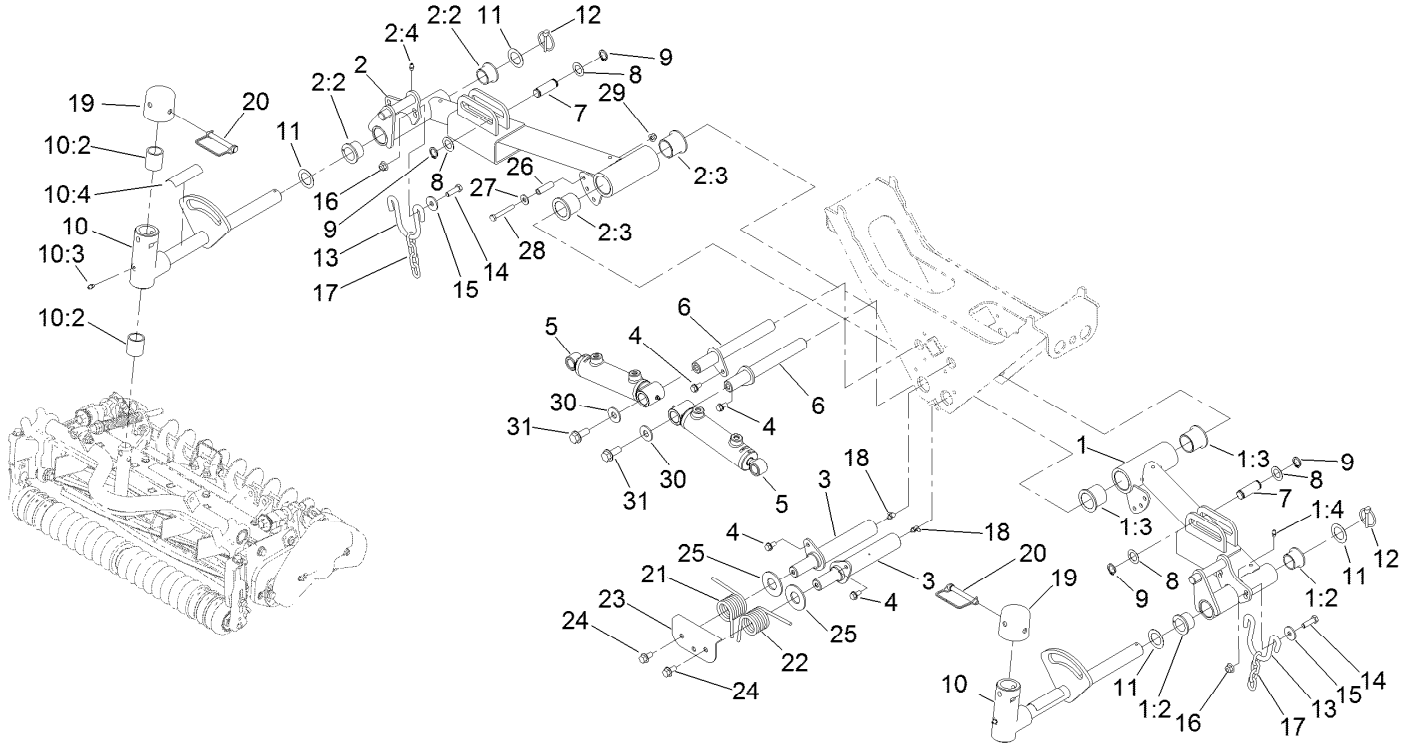


# No. 2 and No. 3 Lift Arm Assembly

| Ref. | Part Number | Qty. | Description |
|---|---|---|---|
| 1 | 133-4939 | 1 | No. 2 Lift Arm ASM |
| 1:2 | 121-7863 | 2 | Bushing-Special |
| 1:3 | 69-6470 | 2 | Bushing-Caster |
| 1:4 | 302-5 | 1 | Fitting-Grease |
| 2 | 133-4941 | 1 | No. 3 Lift Arm ASM |
| 2:2 | 121-7863 | 2 | Bushing-Special |
| 2:3 | 69-6470 | 2 | Bushing-Caster |
| 2:4 | 302-5 | 1 | Fitting-Grease |
| 3 | 127-8504 | 2 | Pin ASM |
| 4 | 32144-14 | 4 | Screw-HWHTF |
| 5 | 138-6941 | 2 | HYD CYL ASM |
| 6 | 133-4931 | 2 | Pin |
| 7 | 104-0046 | 2 | Pin-Slide, Cylinder |
| 8 | 3-6498 | 4 | Washer-Thrust |
| 9 | 32120-93 | 4 | Ring-Retaining |
| 10 | 127-8477 | 2 | Pivot Yoke ASM |
| 10:2 | 121-3187 | 2 | Bushing |
| 10:3 | 302-5 | 1 | Fitting-Grease |
| 10:4 | 110-9642 | 1 | Decal-Warning |
| 11 | 120-2183 | 4 | Washer-Thrust |

| Ref. | Part Number | Qty. | Description |
|---|---|---|---|
| 12 | 92-1298 | 2 | Pin-Lynch |
| 13 | 120-9962 | 2 | Hoop-Chain |
| 14 | 323-7 | 4 | Screw-HH |
| 15 | 63-8410 | 4 | Washer |
| 16 | 104-8301 | 4 | Nut-HF, NI |
| 17 | 84-2450 | 2 | Chain-Straight, 4-Link |
| 18 | 302-60 | 4 | Fitting-Grease |
| 19 | 107-4027 | 2 | Cap |
| 20 | 107-7400 | 2 | Pin-Lynch |
| 21 | 127-8580 | 1 | Spring-Torsion, RH |
| 22 | 127-8581 | 1 | Spring-Torsion, LH |
| 23 | 139-6009-03 | 1 | Catch ASM |
| 24 | 3234-1 | 2 | Screw-HHF |
| 25 | 104-6126 | 2 | Washer-Flat |
| 26 | 107-0285 | 2 | Spacer |
| 27 | 3256-3 | 2 | Washer-Flat |
| 28 | 322-11 | 2 | Screw-HH |
| 29 | 104-8300 | 2 | Nut-HF, NI |
| 30 | 3256-6 | 2 | Washer-Flat |
| 31 | 3234-38 | 2 | Screw-HHF |

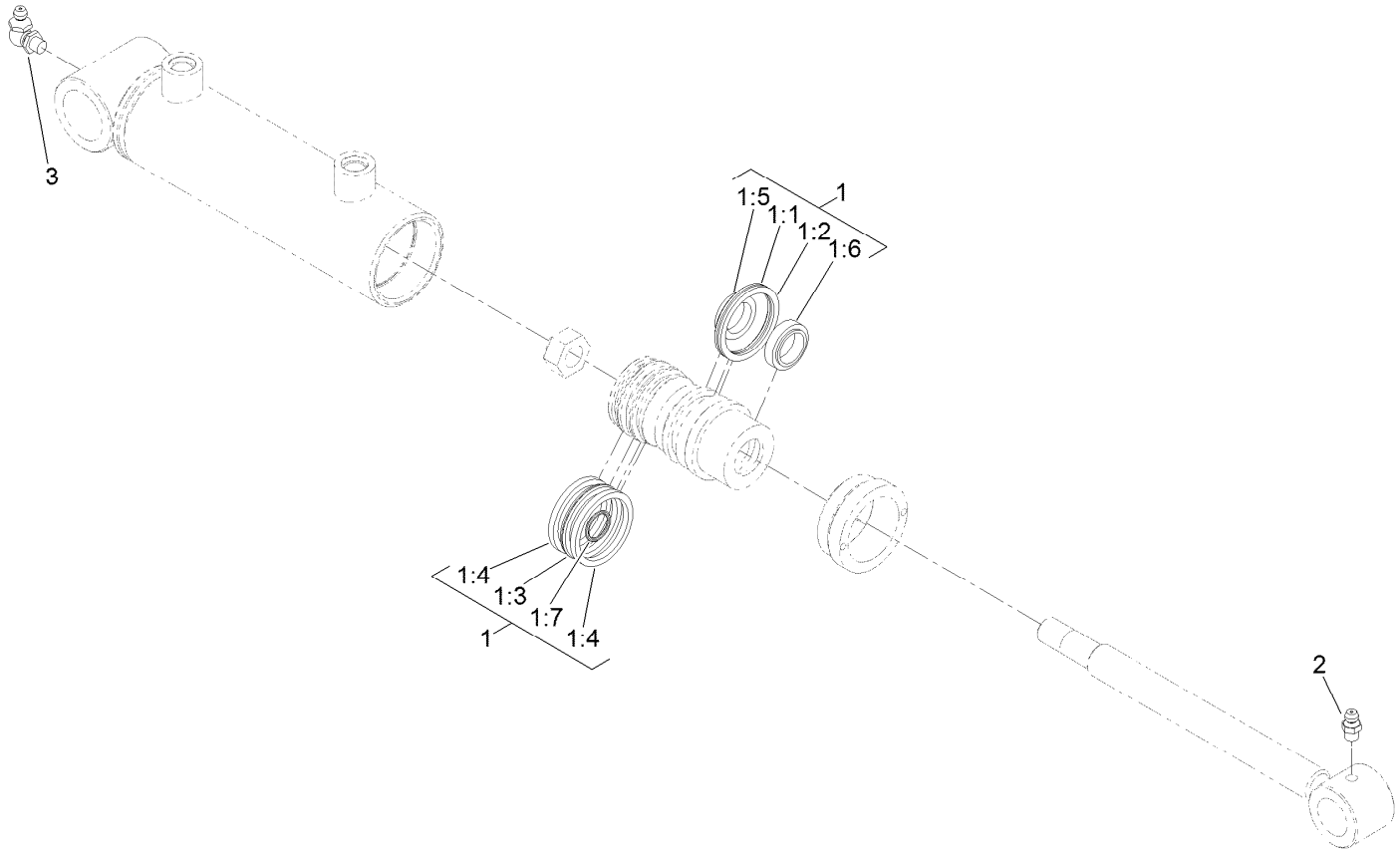


# Hydraulic Cylinder Assembly No. 138-6941

| *Ref.* | *Part Number* | *Qty.* | *Description* |
|---|---|---|---|
| 1 | 127-8587 | 1 | Seal Kit |
| 1:1 | | 1 | O-Ring ● |
| 1:2 | | 1 | Backup ● |
| 1:3 | | 1 | Bp Seal ● |
| 1:4 | | 1 | Wear Ring-Ht ● |
| 1:5 | | 1 | Bt Seal ● |
| 1:6 | | 1 | Dust Seal-Dt ● |
| 1:7 | | 1 | O-Ring ● |
| 2 | 302-5 | 1 | Fitting-Grease |
| 3 | 302-60 | 1 | Fitting-Grease |

● Not serviced separately

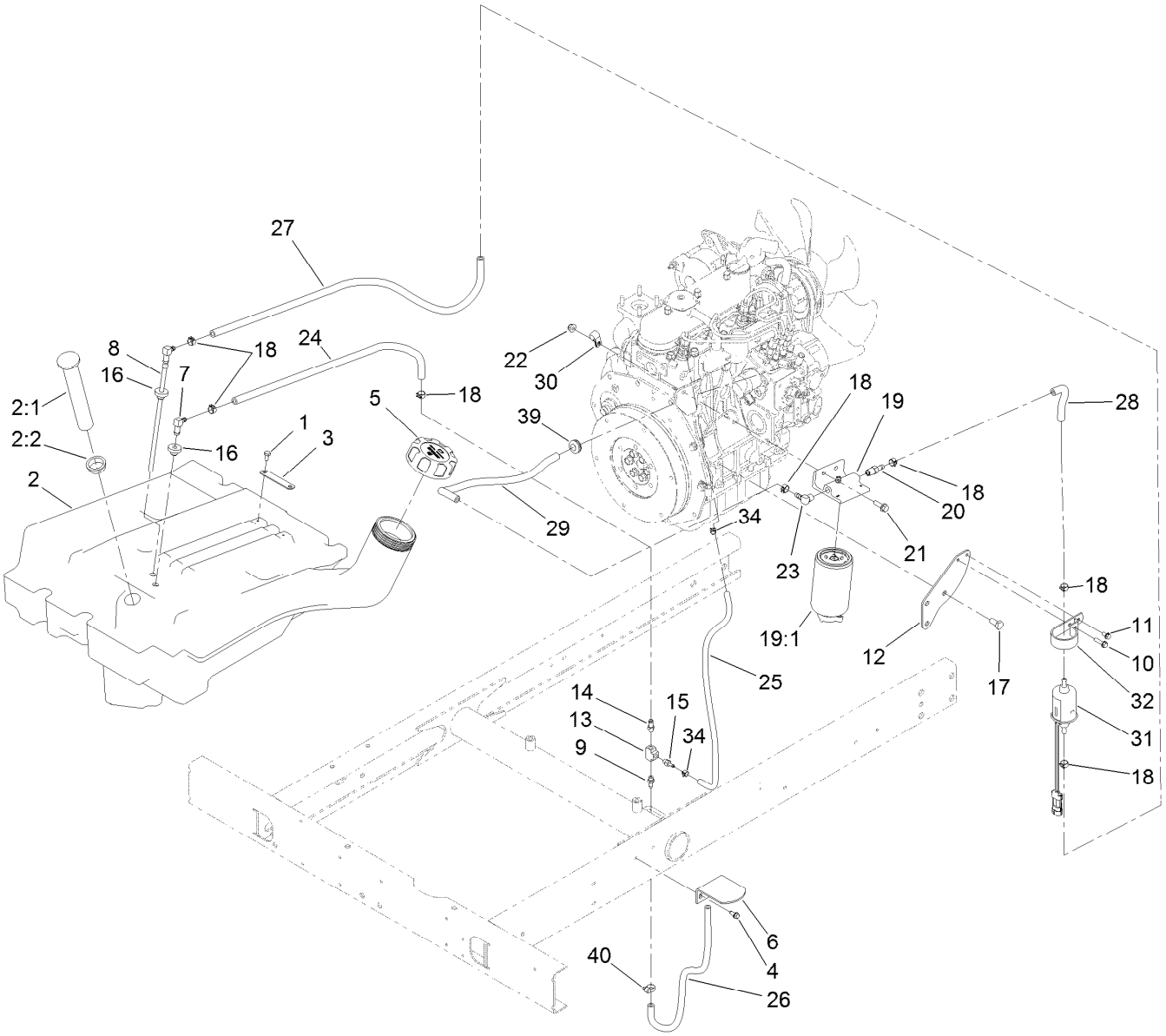


# Fuel Tank and Filter Assembly

| Ref. | Part Number | Qty. | Description |
|---|---|---|---|
| 1 | 321-2 | 2 | Screw-HH |
| 2 | 95-8620 | 1 | Tank-Fuel |
| 2:1 | 95-8971 | 1 | Gauge-Fuel |
| 2:2 | 95-8972 | 1 | Grommet |
| 3 | 95-8881 | 1 | Strap-Line, Fuel |
| 4 | 32144-10 | 2 | Screw-HWH |
| 5 | 114-5064 | 1 | Cap-Diesel |
| 6 | 95-8968-03 | 1 | Support-Tank, Fuel |
| 7 | 46-6550 | 1 | Fitting-Elbow, 90 DEG |
| 8 | 110-9689 | 1 | Pipe-Stand |
| 9 | 304-73 | 1 | Fitting-Straight |
| 10 | 32144-86 | 1 | Screw-HWHTF |
| 11 | 32144-4 | 1 | Screw-HWH |
| 12 | 120-2182-03 | 1 | Plate-Mount, Fuel Pump |
| 13 | 354-20 | 1 | Fitting-Tee |
| 14 | 354-21 | 1 | Fitting-Barbed |
| 15 | 354-22 | 1 | Fitting-Barbed |
| 16 | 46-6560 | 2 | Bushing |
| 17 | 63-7790 | 3 | Screw-Cap |

| Ref. | Part Number | Qty. | Description |
|---|---|---|---|
| 18 | 92-2379 | 7 | Clamp-Hose |
| 19 | 110-9044 | 1 | Separator-Filter |
| 19:1 | 110-9049 | 1 | Filter-Spin On, Fuel/Water |
| 20 | 353-783 | 1 | Fitting-STR |
| 21 | 3234-17 | 2 | Screw-HHF |
| 22 | 104-8300 | 2 | Nut-HF, NI |
| 23 | 353-781 | 1 | Fitting-HYD, 90 |
| 24 | 110-6187 | 1 | Hose-Fuel |
| 25 | 110-8751 | 1 | Hose-Fuel |
| 26 | 110-5701 | 1 | Hose-Fuel |
| 27 | 121-7914 | 1 | Hose-Fuel |
| 28 | 117-4026 | 1 | Hose-Fuel |
| 29 | 121-7852 | 1 | Hose-Fuel |
| 30 | 2412-10 | 1 | Clamp-R |
| 31 | 110-8806 | 1 | Pump-Fuel |
| 32 | 110-8817 | 1 | Bracket-Pump, Fuel |
| 34 | 2412-80 | 2 | Clamp-Hose |
| 39 | 1-543296 | 1 | Grommet |
| 40 | 2412-108 | 2 | Clamp-Worm |

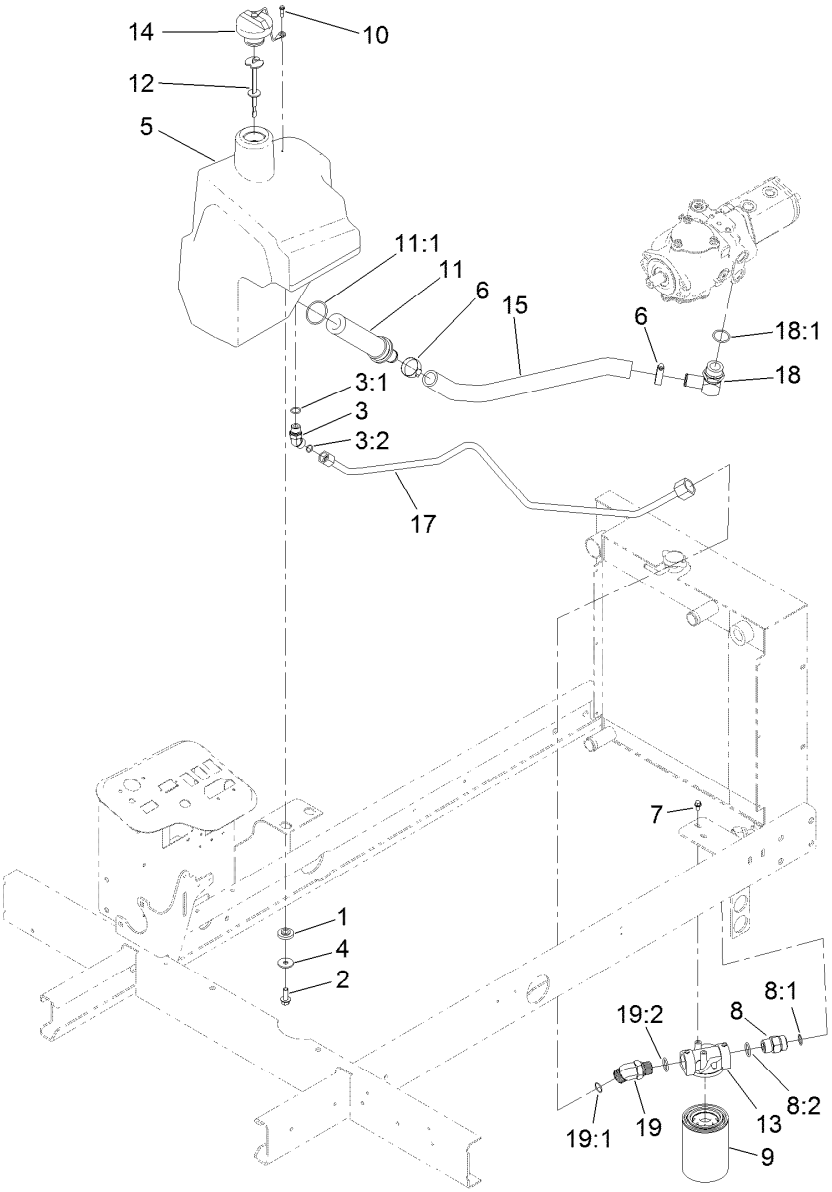


# Hydraulic Tank and Filter Assembly

| Ref. | Part Number | Qty. | Description |
|---|---|---|---|
| 1 | 240-11 | 4 | Bushing-Flange |
| 2 | 3234-11 | 4 | Screw-HHF |
| 3 | 340-101 | 1 | Fitting-HYD, 45 DEG |
| 3:1 | 237-30 | 1 | O-Ring |
| 3:2 | 237-79 | 1 | O-Ring |
| 4 | 63-8410 | 4 | Washer |
| 5 | 104-4840 | 1 | Tank-HYD |
| 6 | 2412-34 | 2 | Clamp-Hose |
| 7 | 3234-13 | 2 | Screw-HHF |
| 8 | 340-9 | 1 | Fitting-STR |
| 8:1 | 237-58 | 1 | O-Ring |
| 8:2 | 237-81 | 1 | O-Ring |
| 9 | 86-3010 | 1 | Filter-Oil |

| Ref. | Part Number | Qty. | Description |
|---|---|---|---|
| 10 | 57-5420 | 1 | Screw-Shoulder |
| 11 | 104-7546 | 1 | Tank Strainer ASM |
| 11:1 | 340-136 | 1 | O-Ring |
| 12 | 119-6968 | 1 | Dipstick-Oil |
| 13 | 92-5821 | 1 | Head-Filter |
| 14 | 93-7160 | 1 | Cap-Oil, HYD |
| 15 | 121-7803 | 1 | Hose-Suction |
| 17 | 136-8044 | 1 | Tube-Hydraulic |
| 18 | 23-8910 | 1 | Stem-Barb-90 |
| 18:1 | 237-146 | 1 | O-Ring |
| 19 | 100-5530 | 1 | Fitting-45 DEG |
| 19:1 | 237-58 | 1 | O-Ring |
| 19:2 | 237-81 | 1 | O-Ring |

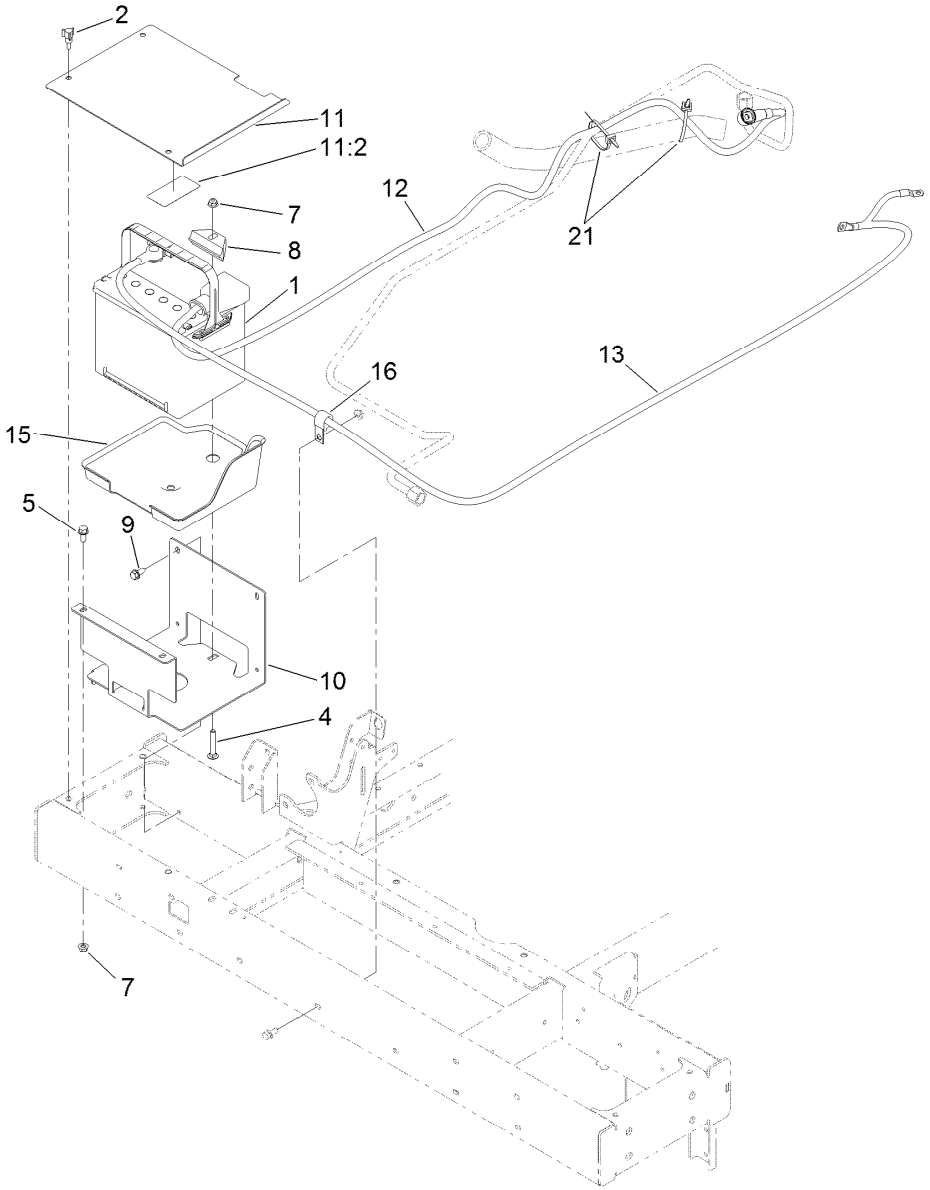


# Battery Assembly

| Ref. | Part Number | Qty. | Description |
|---|---|---|---|
| 1 | 106-5187 | 1 | Battery, 525 CCA W/O Electrolyte |
| 2 | 233-70 | 3 | Knob-Star, Three |
| 4 | 3230-6 | 1 | Bolt-CARR |
| 5 | 3234-5 | 2 | Screw-HHF |
| 7 | 104-8300 | 3 | Nut-HF, NI |
| 8 | 138-6335 | 1 | Retainer-Battery |
| 9 | 32104-32 | 2 | Screw-HWH |
| 10 | 127-8527-03 | 1 | Bracket-Battery |
| 11 | 127-8531 | 1 | Cover-Battery |
| 11:2 | 93-7276 | 1 | Decal-Danger |
| 12 | 122-0812 | 1 | Cable-Battery, Positive |
| 13 | 122-0817 | 1 | Battery-Cable, Negative |
| 15 | 133-4913 | 1 | Tray-Battery |
| 16 | 94-9580 | 1 | Clamp-J |
| 21 | 3290-378 | 2 | Tie-Cable |

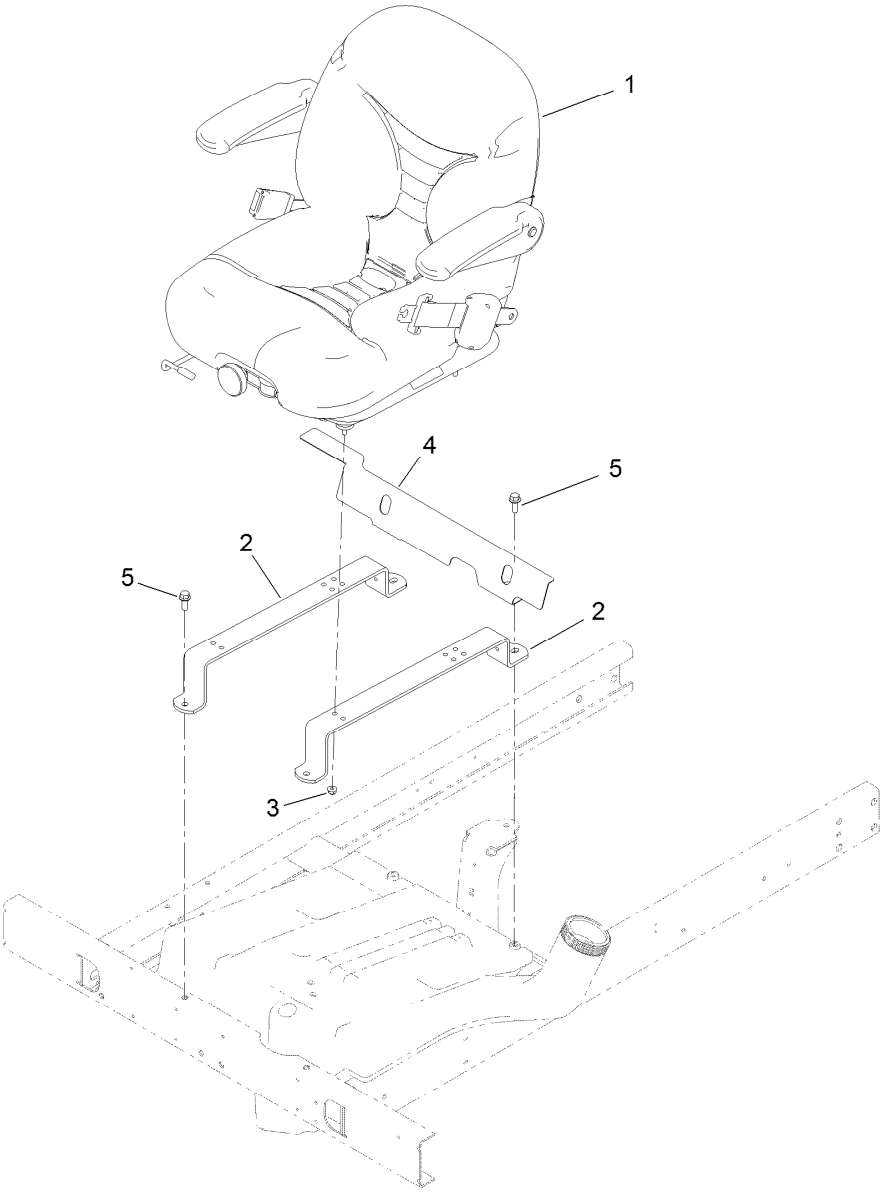


# Seat and Heat-Shield Assembly

| *Ref.* | *Part Number* | *Qty.* | *Description* |
|---|---|---|---|
| 1 | 116-3998 | 1 | Suspension Seat ASM |
| 2 | 120-2120-03 | 2 | Strap-Support, Seat |
| 3 | 104-8300 | 4 | Nut-HF, NI |
| 4 | 104-4833-03 | 1 | Shield-Heat |
| 5 | 3234-11 | 4 | Screw-HHF |

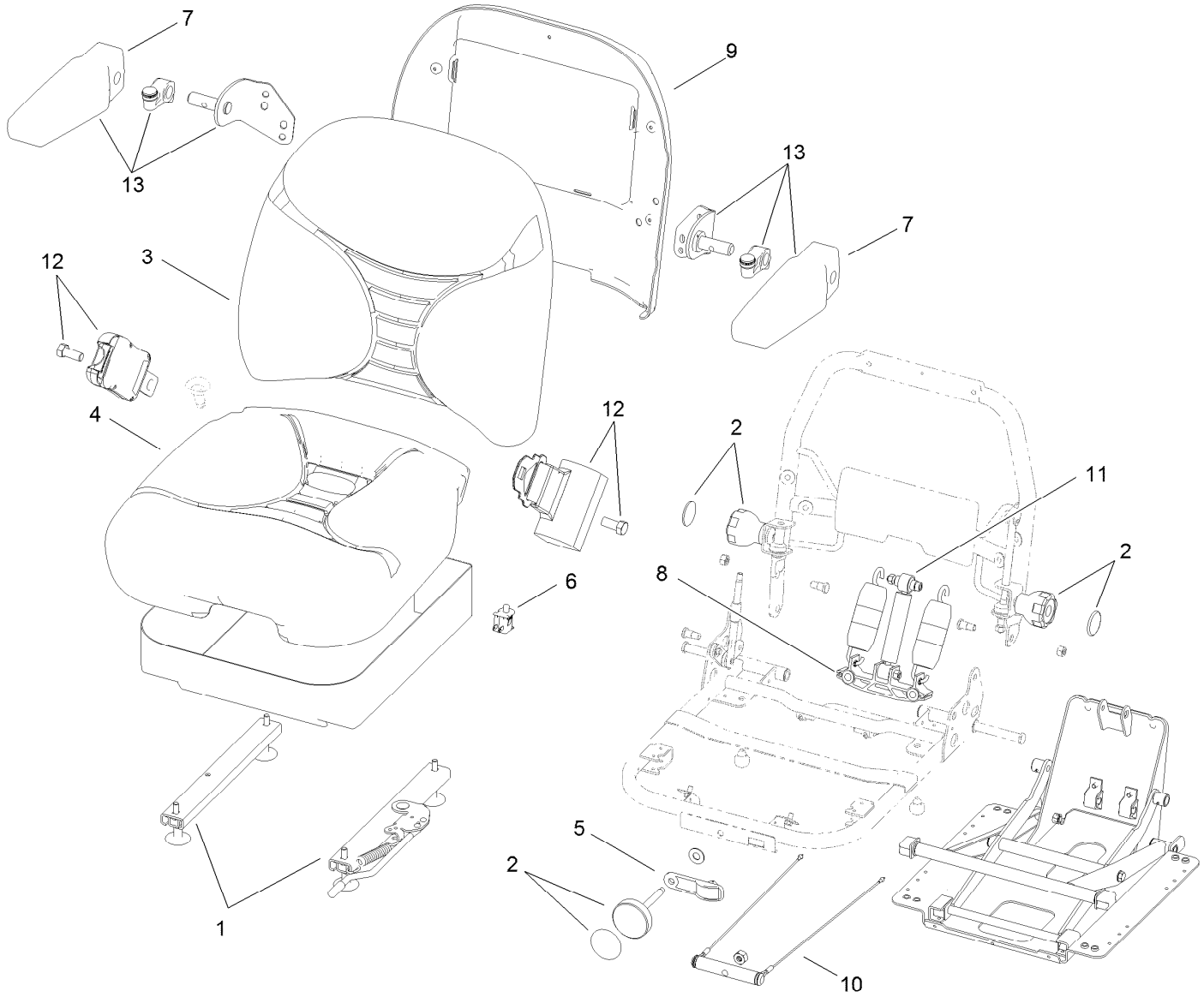


# Seat Assembly No. 116-3998

| Ref. | Part Number | Qty. | Description |
|---|---|---|---|
| 1 | 116-0333 | 1 | Seat Track Kit |
| 2 | 107-1881 | 1 | Knob Kit |
| 3 | 107-1882 | 1 | Back Cushion Kit |
| 4 | 107-1883 | 1 | Bottom Cushion Kit |
| 5 | 107-1885 | 1 | Weight Indicator Kit |
| 6 | 82-2190 | 1 | Switch-Bail |
| 7 | 107-1887 | 1 | Pad-Armrest |
| 8 | 109-3343 | 1 | Spring And Saddle Kit |
| 9 | 109-3344 | 1 | Back Panel Kit |
| 10 | 109-3345 | 1 | Weight Adjust Kit |
| 11 | 116-0998 | 1 | Shock Absorber Kit |
| 12 | 110-0413 | 1 | Seatbelt-Retractable |
| 13 | 121-9415 | 1 | Armrest Kit |

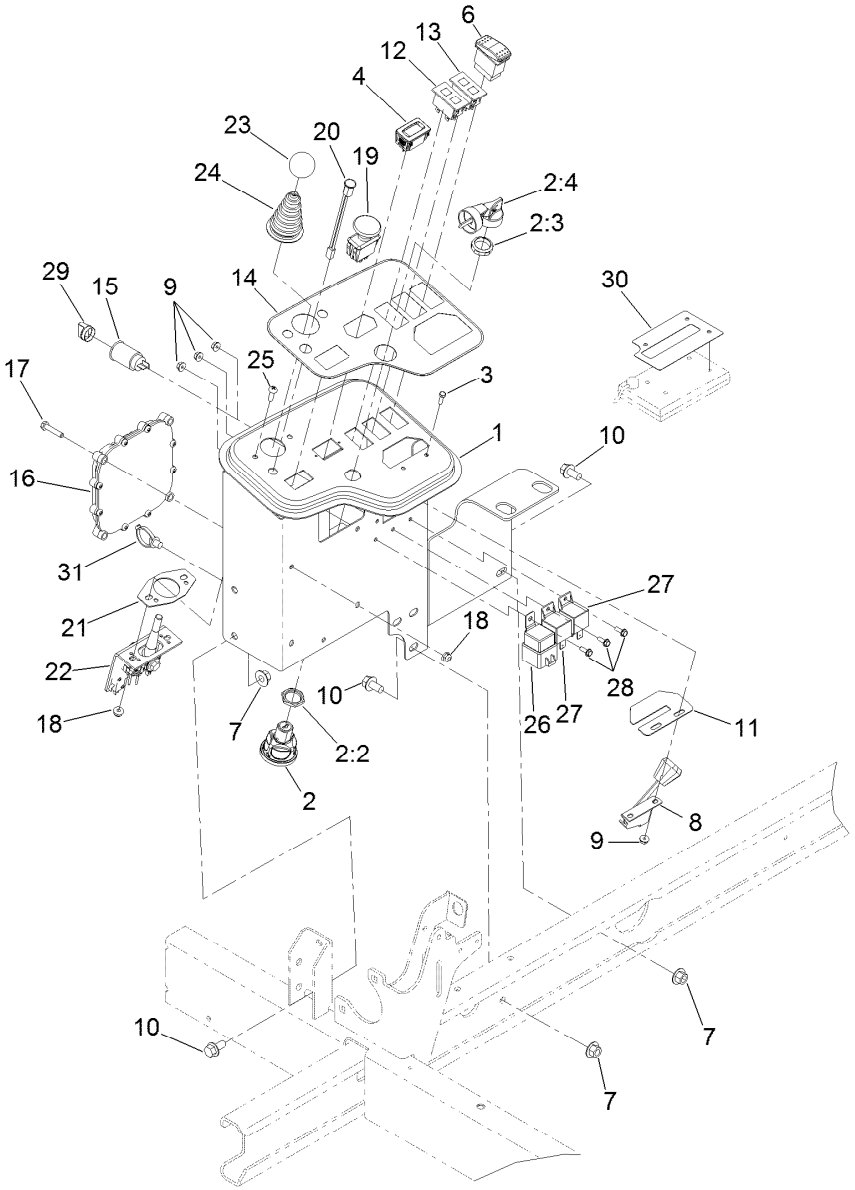


# Control Panel Assembly

| Ref. | Part Number | Qty. | Description |
|---|---|---|---|
| 1 | 120-2051-03 | 1 | Panel-Control |
| 2 | 121-5159 | 1 | Switch-Ignition |
| 2:2 | 121-5160 | 1 | Nut-Hex |
| 2:3 | 121-5161 | 1 | Nut-Face |
| 2:4 | 121-5162 | 1 | Set-Key, Ignition |
| 3 | 3290-134 | 2 | Screw |
| 4 | 120-2244 | 1 | Hourmeter |
| 6 | 95-8999 | 1 | Switch-Rocker, On-None-On |
| 7 | 32128-43 | 5 | Nut-Flange |
| 8 | 138-1224 | 1 | Cable-Throttle |
| 9 | 3290-148 | 5 | Nut-HF |
| 10 | 3234-1 | 5 | Screw-HHF |
| 11 | 104-0421 | 1 | Plate-Stop, Throttle |
| 12 | 100-8070 | 1 | Lamp-Warning |
| 13 | 100-8071 | 1 | Lamp-Warning |
| 14 | 120-2105 | 1 | Decal-Console |
| 15 | 99-7411 | 1 | Point-Power |
| 16 | 115-1900 | 1 | Controller |
| 17 | 321-8 | 4 | Screw-HH |
| 18 | 104-7201 | 6 | Nut-HF, NI |
| 19 | 93-9999 | 1 | Switch-PTO |
| 20 | 95-7652 | 1 | Light-Indicator |
| 21 | 112-9181 | 1 | Plate-Boot |
| 22 | 120-5280 | 1 | Bracket-Joystick |
| 23 | 233-42 | 1 | Knob |
| 24 | 93-5961 | 1 | Boot-Lever |
| 25 | 3258-166 | 2 | Screw-PRH |
| 26 | 99-7430 | 1 | Relay-Mini |
| 27 | 99-7435 | 2 | Relay |
| 28 | 32105-23 | 3 | Screw |
| 29 | 99-7416 | 1 | Cap |
| 30 | 133-4914 | 1 | Decal-Diagnostic Overlay |
| 31 | 32180-030 | 1 | Clip-Tie |

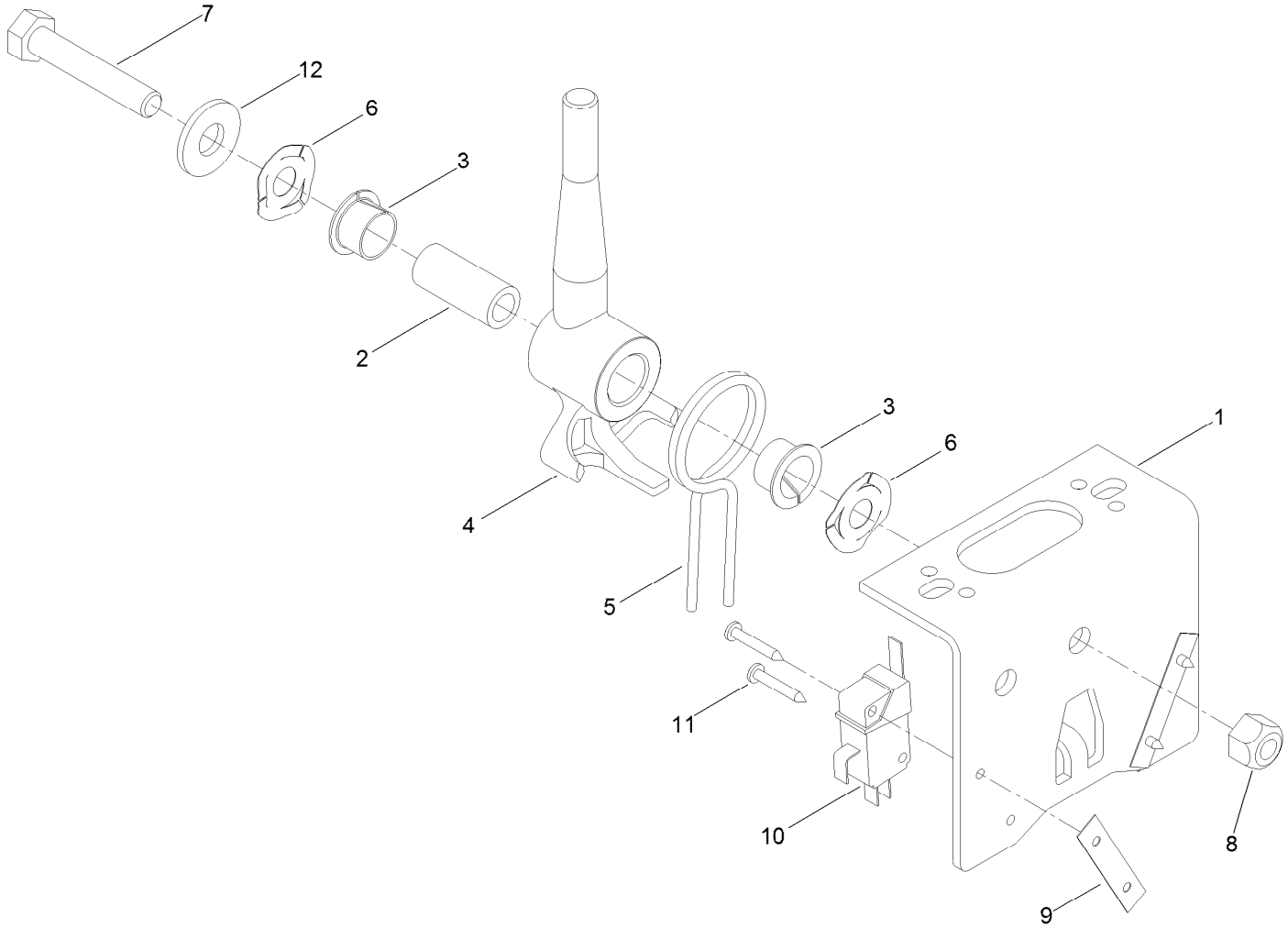


# Joystick Bracket Assembly No. 120-5280

| *Ref.* | *Part Number* | *Qty.* | *Description* |
|---|---|---|---|
| 1 | 115-5357-03 | 1 | Bracket-Joystick |
| 2 | 106-4192 | 1 | Spacer |
| 3 | 93-5547 | 2 | Bushing-Nylon |
| 4 | 119-3540 | 1 | Hub-Pivot, Joystick |
| 5 | 105-8289 | 1 | Spring-Torsion |
| 6 | 106-4193 | 2 | Washer-Finger, Spring |
| 7 | 322-9 | 1 | Screw-HH |
| 8 | 3296-29 | 1 | Nut-Lock, NI |
| 9 | 3290-354 | 2 | Nut-Speed |
| 10 | 108-6496 | 2 | Switch (W/Boot) |
| 11 | 95-3003 | 4 | Screw-PPHTF |
| 12 | 3256-3 | 1 | Washer-Flat |

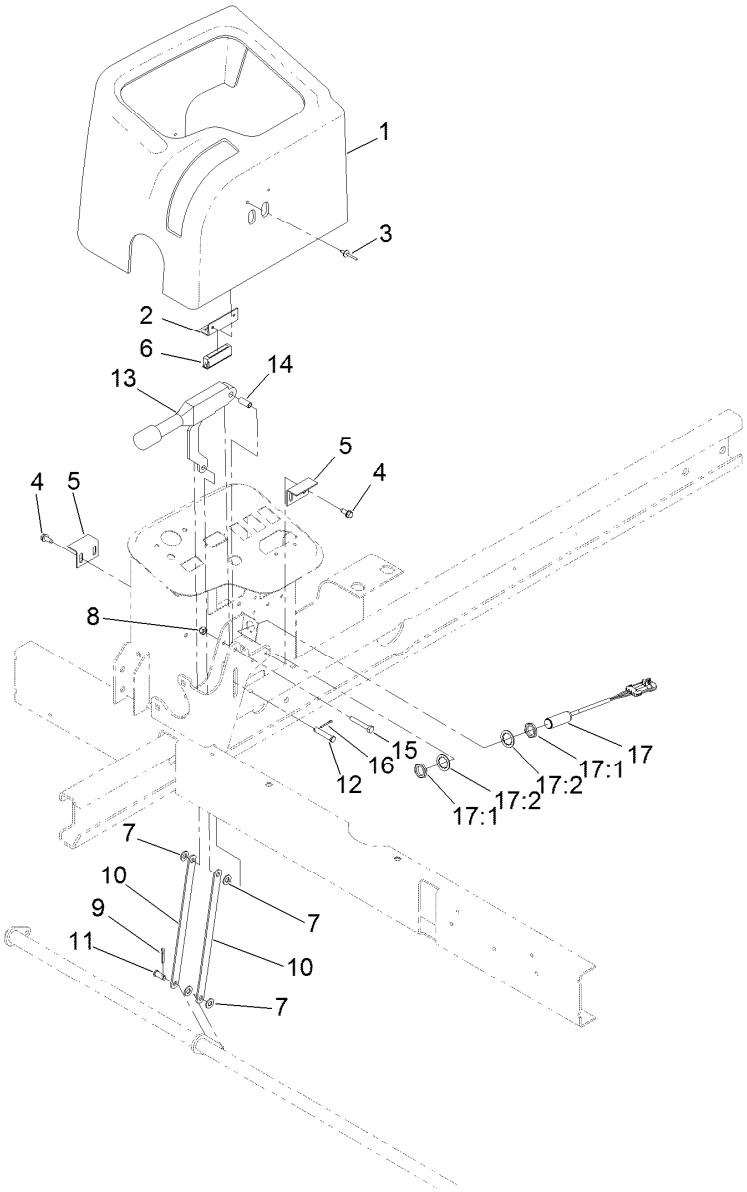


# Parking Brake Assembly

| Ref. | Part Number | Qty. | Description |
|---|---|---|---|
| 1 | 120-2054 | 1 | Cover-Plastic |
| 2 | 95-8763 | 2 | Bracket-Hold Down, Cover |
| 3 | 3269-5 | 4 | Rivet-Pop |
| 4 | 32144-10 | 4 | Screw-HWH |
| 5 | 95-8765 | 2 | Bracket-Strike, Magnet |
| 6 | 58-4250 | 2 | Catch-Magnetic |
| 7 | 3256-23 | 4 | Washer-Plain |
| 8 | 3296-42 | 1 | Nut-Lock, NI |
| 9 | 3272-10 | 1 | Pin-Cotter |
| 10 | 104-4628 | 2 | Link-Brake, Parking |

| Ref. | Part Number | Qty. | Description |
|---|---|---|---|
| 11 | 283-62 | 1 | Pin-Clevis |
| 12 | 94-3829 | 1 | Pin-Clevis |
| 13 | 104-4817 | 1 | Lever-Brake |
| 14 | 87-4710 | 1 | Spacer-Brake, Parking |
| 15 | 321-10 | 1 | Screw-HH |
| 16 | 3272-6 | 1 | Pin-Cotter |
| 17 | 115-0282 | 1 | Proximity Sensor ASM |
| 17:1 | 117-3207 | 2 | Nut-Hex |
| 17:2 | 117-3208 | 2 | Washer-Lock, Internal Tooth |

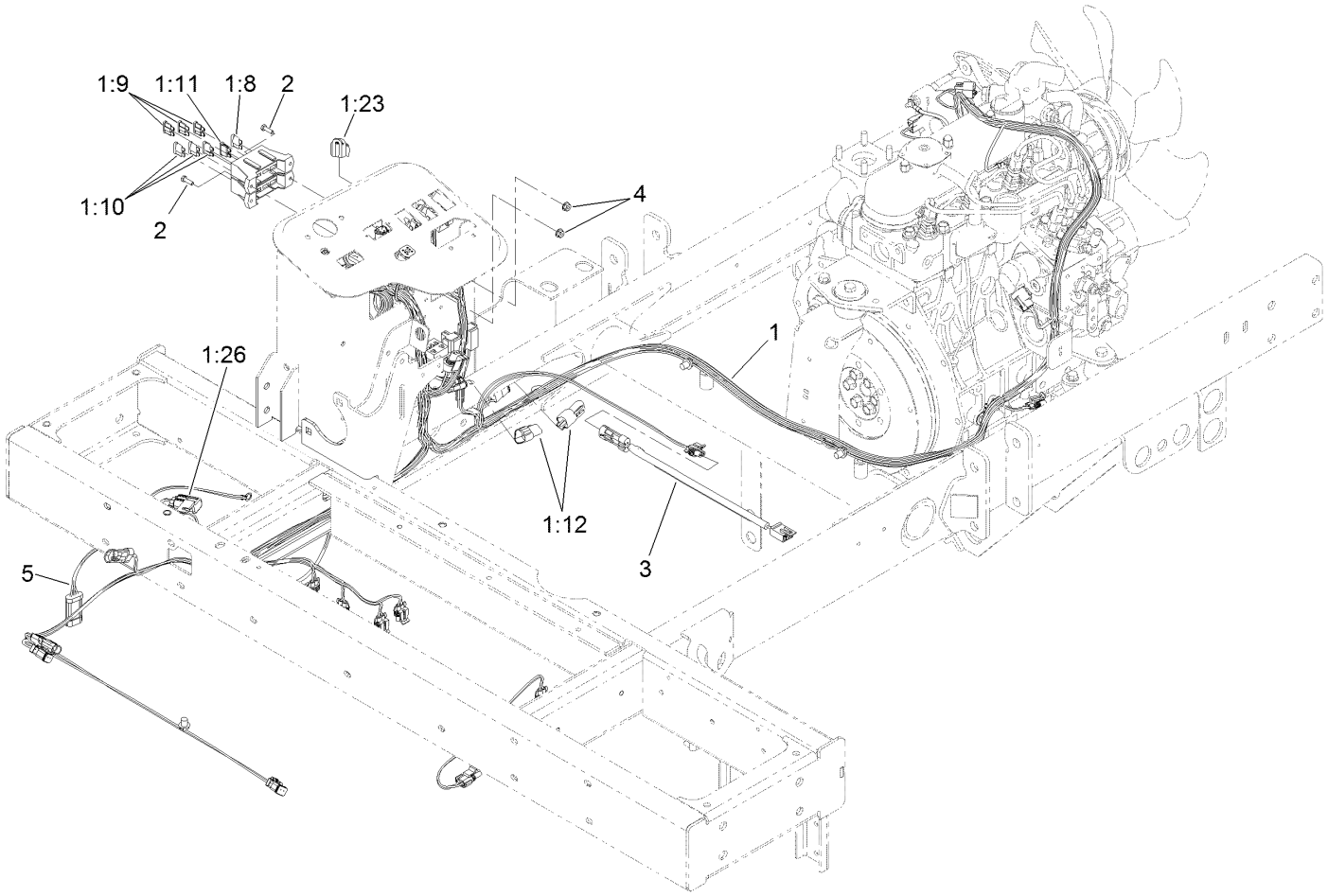


# Main Wire Harness Assembly

| *Ref.* | *Part Number* | *Qty.* | *Description* |
|---|---|---|---|
| 1 | 122-1731 | 1 | Harness-Wire, Main |
| 1:8 | 94-6710 | 1 | Fuse-2 Amp |
| 1:9 | 114241 | 3 | Fuse-Blade, 7.5 Amp |
| 1:10 | 218-578 | 3 | Fuse-Blade, 10 Amp |
| 1:11 | 109355 | 1 | Fuse-Blade, 15 Amp |
| 1:12 | 32180-043 | 2 | Resistor-120 Ohm |
| 1:23 | 32180-089 | 1 | Cap-Plug, 3 Way |
| 1:26 | 32180-156 | 1 | Cap-Plug, 6 Way |
| 2 | 3290-134 | 2 | Screw |
| 3 | 108-8657 | 1 | Harness-Wire, Seat |
| 4 | 3290-148 | 2 | Nut-HF |
| 5 | 122-0715 | 1 | Harness-Wire, 100In Turn-Around |

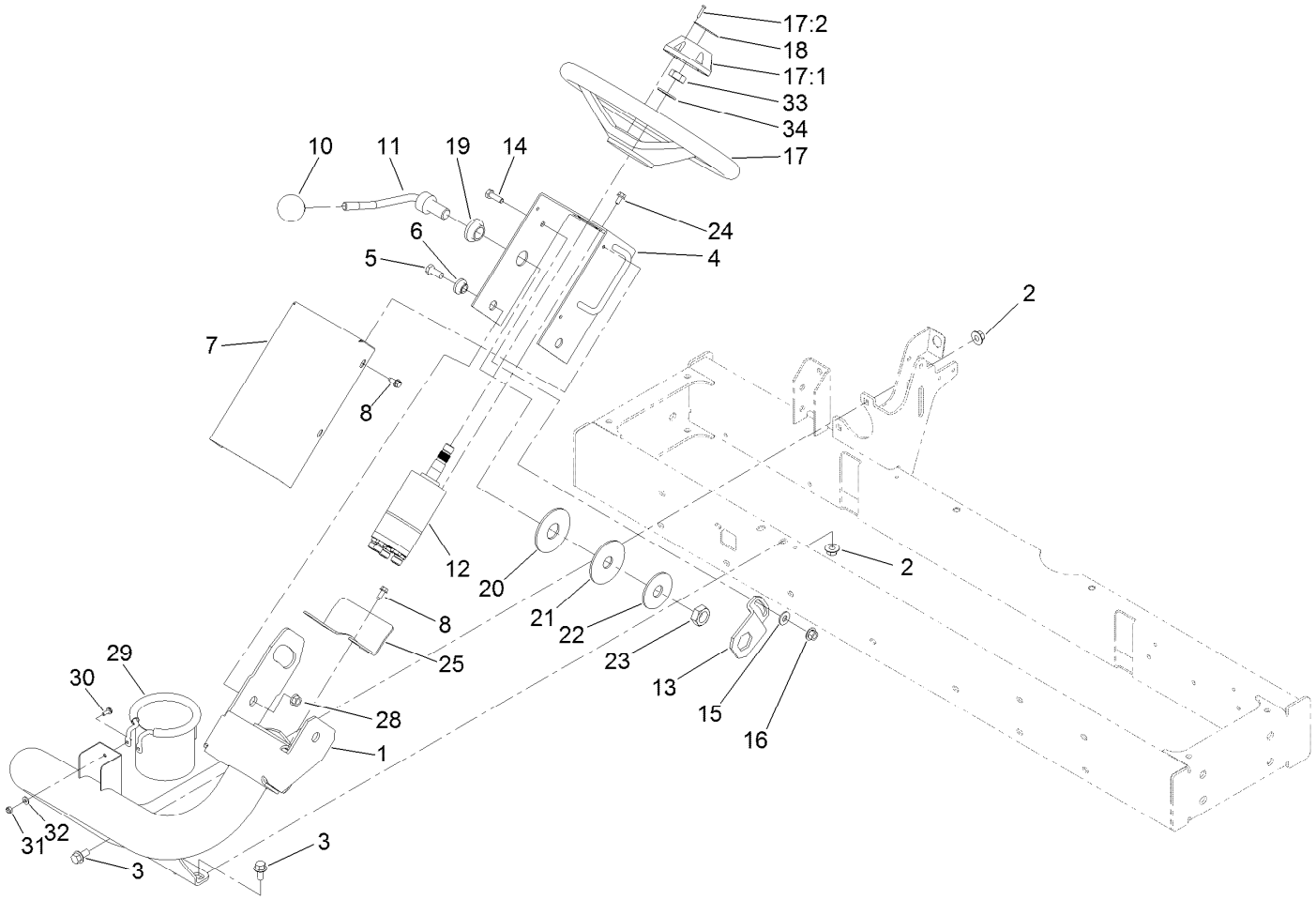


# Steering Arm Assembly

| Ref. | Part Number | Qty. | Description |
|---|---|---|---|
| 1 | 120-2063-01 | 1 | Arm-Steering |
| 2 | 32128-43 | 4 | Nut-Flange |
| 3 | 3234-1 | 4 | Screw-HHF |
| 4 | 120-2190-01 | 1 | Bracket-Valve |
| 5 | 323-5 | 2 | Screw-HH |
| 6 | 93-5988 | 2 | Hub-Pivot |
| 7 | 95-8794-01 | 1 | Cover-Valve, Steering |
| 8 | 32144-10 | 5 | Screw-HWH |
| 10 | 233-48 | 1 | Knob |
| 11 | 95-8798-03 | 1 | Lever-Steering |
| 12 | 139-6002 | 1 | Valve-Steering |
| 13 | 80-2880 | 1 | Bracket-Tilt |
| 14 | 322-5 | 1 | Screw-HH |
| 15 | 3256-3 | 1 | Washer-Flat |
| 16 | 32128-44 | 1 | Nut |
| 17 | 75-0560 | 1 | Steering Wheel ASM |
| 17:1 | 32144-21 | 1 | Screw |

| Ref. | Part Number | Qty. | Description |
|---|---|---|---|
| 17:2 | 68-5140 | 1 | Cap-Wheel, Steering |
| 18 | 68-5370 | 1 | Decal |
| 19 | 99-3502 | 1 | Boss |
| 20 | 31-0390 | 1 | Disc-Friction |
| 21 | 82-9010 | 1 | Disc-Friction |
| 22 | 80-2930 | 1 | Washer-Flat |
| 23 | 3218-7 | 1 | Nut-Jam |
| 24 | 33103-012 | 4 | Screw-HHF |
| 25 | 99-3405-01 | 1 | Shield-Steering |
| 28 | 32128-21 | 2 | Nut-HF Lock |
| 29 | 117-2378 | 1 | Holder-Bag |
| 30 | 3290-321 | 2 | Screw-HWH |
| 31 | 3296-2 | 2 | Nut-Lock, NI |
| 32 | 3256-14 | 2 | Washer-Flat |
| 33 | 3296-33 | 1 | Nut-Lock, NI |
| 34 | 3256-27 | 1 | Washer-Flat |

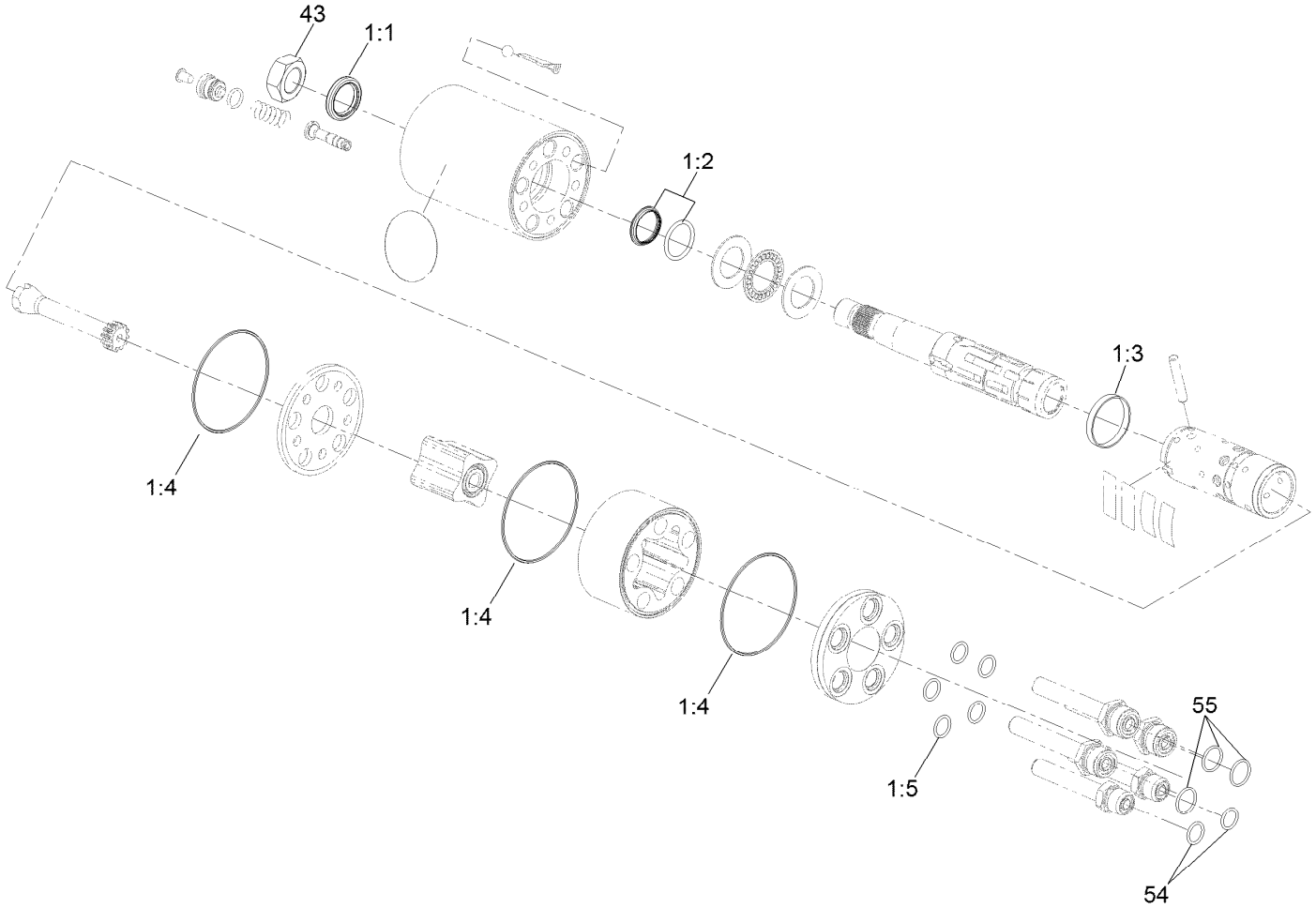


# Steering Valve Assembly No. 139-6002

| *Ref.* | *Part Number* | *Qty.* | *Description* |
|---|---|---|---|
| 1 | 106-6716 | 1 | Seal Kit ● |
| 1:1 | | 1 | Ring-Seal, Dust ■ |
| 1:2 | | 1 | Seal-Shaft ■ |
| 1:3 | | 1 | O-Ring ■ |
| 1:4 | | 2 | O-Ring ■ |
| 1:5 | | 5 | O-Ring ■ |
| 43 | 3296-33 | 1 | Nut-Lock, NI |
| 54 | 237-21 | 2 | O-Ring |
| 55 | 237-22 | 3 | O-Ring |

● Not illustrated

■ Not serviced separately

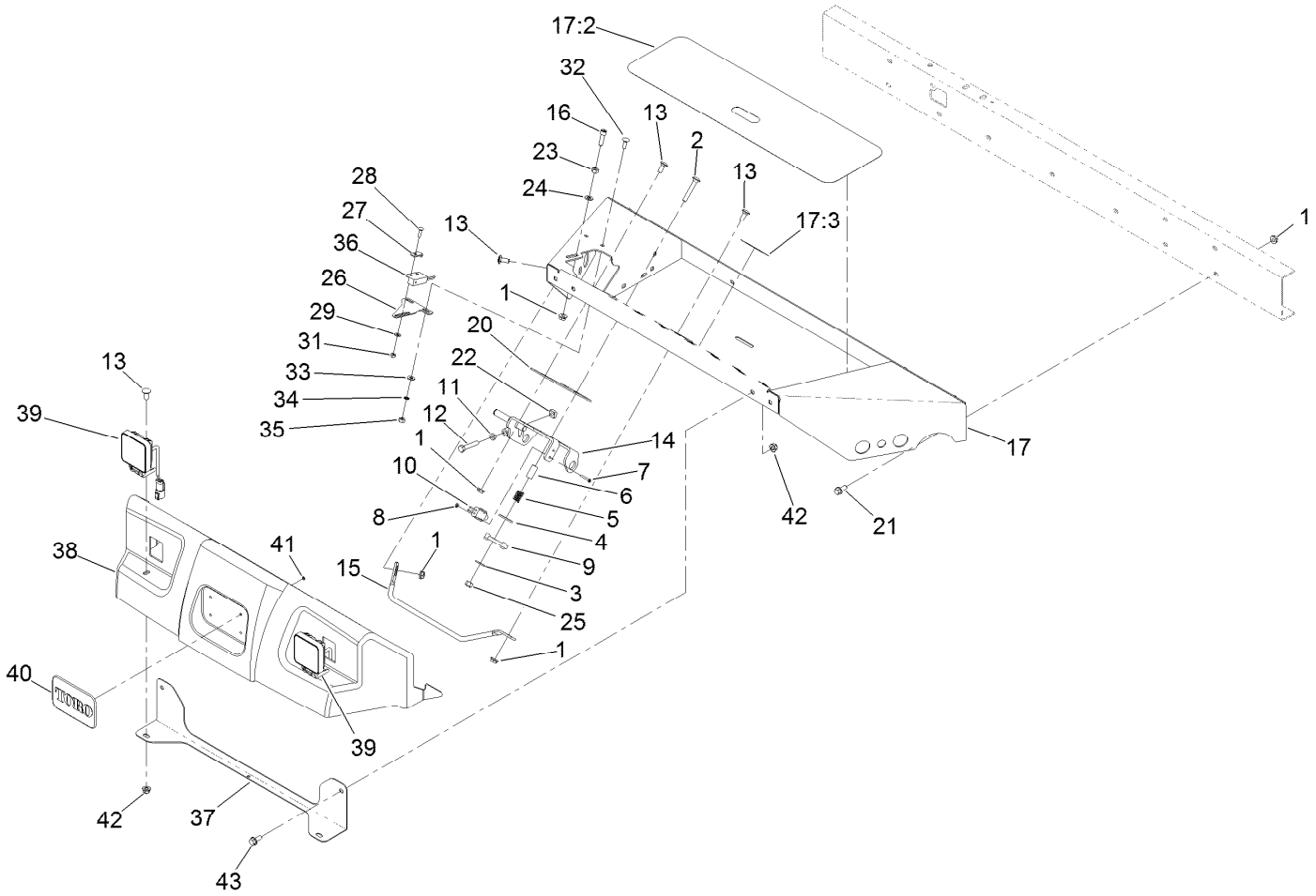


# Front Shroud and Floorplate Assembly

| Ref. | Part Number | Qty. | Description |
|---|---|---|---|
| 1 | 32128-20 | 15 | Nut-HF |
| 2 | 3230-6 | 1 | Bolt-CARR |
| 3 | 3256-3 | 1 | Washer-Flat |
| 4 | 3256-40 | 1 | Washer-Flat |
| 5 | 65-9940 | 1 | Spring |
| 6 | 95-8866 | 1 | Tube-Arm, Rocker |
| 7 | 32105-9 | 2 | Screw-HH |
| 8 | 3296-9 | 2 | Nut-Hex |
| 9 | 99-3593 | 1 | Arm-Rocker |
| 10 | 95-8900 | 1 | Switch |
| 11 | 3218-2 | 1 | Nut-Hex Jam |
| 12 | 322-41 | 1 | Bolt-Hex,TAP |
| 13 | 3230-23 | 6 | Bolt-CARR |
| 14 | 95-8869-03 | 1 | Bracket-Pedal, Traction |
| 15 | 95-8893 | 1 | Bar-Deflector |
| 16 | 3274-22 | 1 | Screw-HSH |
| 17 | 120-2189 | 1 | Floorplate ASM |
| 17:2 | 99-3478 | 1 | Tread-Foot |
| 17:3 | 99-3444 | 1 | Decal-Mow / Transport |
| 20 | 106-2661-01 | 1 | Plate-Support |
| 21 | 3234-5 | 10 | Screw-HHF |

| Ref. | Part Number | Qty. | Description |
|---|---|---|---|
| 22 | 99-3565 | 1 | Nut-Square |
| 23 | 3217-6 | 1 | Nut-Hex |
| 24 | 3256-23 | 1 | Washer-Plain |
| 25 | 3296-29 | 1 | Nut-Lock, NI |
| 26 | 100-4871 | 1 | Bracket-Switch, Neutral |
| 27 | 100-4872 | 1 | Plate-Switch, Neutral |
| 28 | 3229-20 | 1 | Screw-CARR |
| 29 | 3256-14 | 1 | Washer-Flat |
| 31 | 3296-2 | 1 | Nut-Lock, NI |
| 32 | 3229-1 | 2 | Screw-CARR |
| 33 | 3256-22 | 2 | Washer-Flat |
| 34 | 3255-7 | 2 | Washer-Lock/EXT |
| 35 | 3217-5 | 2 | Nut-Hex |
| 36 | 100-1270 | 1 | Switch-Proximity |
| 37 | 121-7822-03 | 1 | Bracket-Head Light |
| 38 | 121-7823 | 1 | Shroud-Front |
| 39 | 139-5990 | 2 | *obs* Light-Work, LED |
| 40 | 93-6028 | 1 | Plate-Logo |
| 41 | 3254-9 | 4 | Washer-Lock, Internal |
| 42 | 104-8300 | 4 | Nut-HF, NI |
| 43 | 3234-47 | 2 | Screw-HHF |

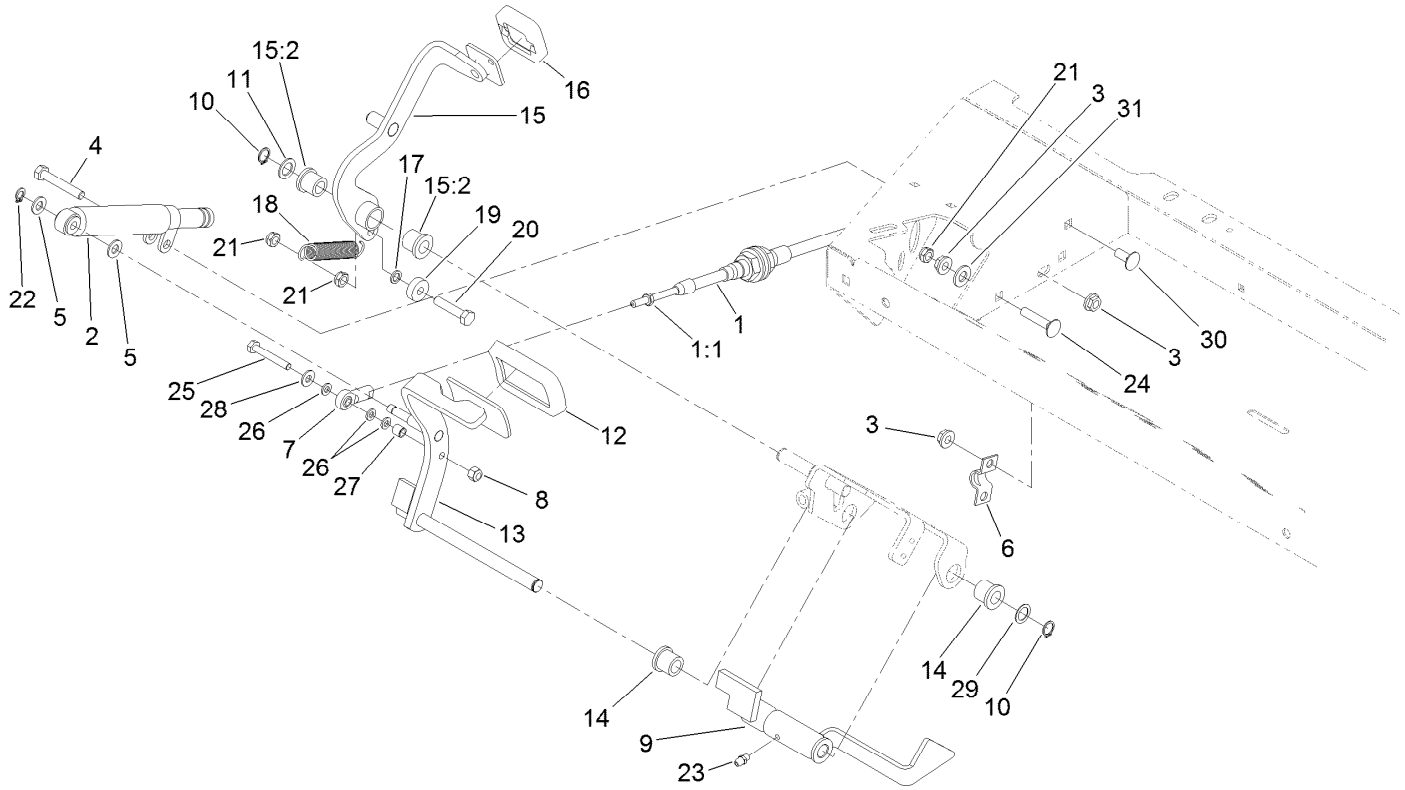


# Traction Control Assembly

| Ref. | Part Number | Qty. | Description |
|---|---|---|---|
| 1 | 100-4815 | 1 | Cable-Control, Traction |
| 1:1 | 3220-1 | 2 | Nut-Jam |
| 2 | 76-8870 | 1 | Damper-Lever |
| 3 | 32128-20 | 5 | Nut-HF |
| 4 | 322-10 | 1 | Screw-HH |
| 5 | 3256-23 | 2 | Washer-Plain |
| 6 | 93-2092 | 1 | Clamp-Cable |
| 7 | 2411-41 | 1 | Rod End-Ball Joint |
| 8 | 3296-42 | 1 | Nut-Lock, NI |
| 9 | 95-8861 | 1 | Slide |
| 10 | 32151-84 | 2 | Ring-Shaft, EXT |
| 11 | 41-8440 | 1 | Washer |
| 12 | 74-9100 | 1 | Pad-Pedal, Forward |
| 13 | 104-4852-03 | 1 | Pedal-Traction |
| 14 | 256-243 | 2 | Bearing-Flange |
| 15 | 99-3379 | 1 | Pedal-Reverse ASM |
| 15:2 | 256-243 | 2 | Bearing-Flange |

| Ref. | Part Number | Qty. | Description |
|---|---|---|---|
| 16 | 74-9110 | 1 | Pad-Pedal, Reverse |
| 17 | 75-5470 | 1 | Spacer-Bearing |
| 18 | 99-3476 | 1 | Spring-Extension |
| 19 | 251-259 | 1 | Bearing-Ball |
| 20 | 322-7 | 1 | Screw-HH |
| 21 | 3296-47 | 3 | Nut-Lock,NI |
| 22 | 32151-3 | 1 | Ring-Grip |
| 23 | 302-5 | 1 | Fitting-Grease |
| 24 | 3230-27 | 1 | Screw-CARR |
| 25 | 321-10 | 1 | Screw-HH |
| 26 | 33093-00 | 3 | Washer-Flat |
| 27 | 99-3545 | 1 | Spacer |
| 28 | 3256-22 | 1 | Washer-Flat |
| 29 | 73-0040 | 4 | Washer-Thrust |
| 30 | 3230-23 | 2 | Bolt-CARR |
| 31 | 3256-24 | 1 | Washer-Plain |

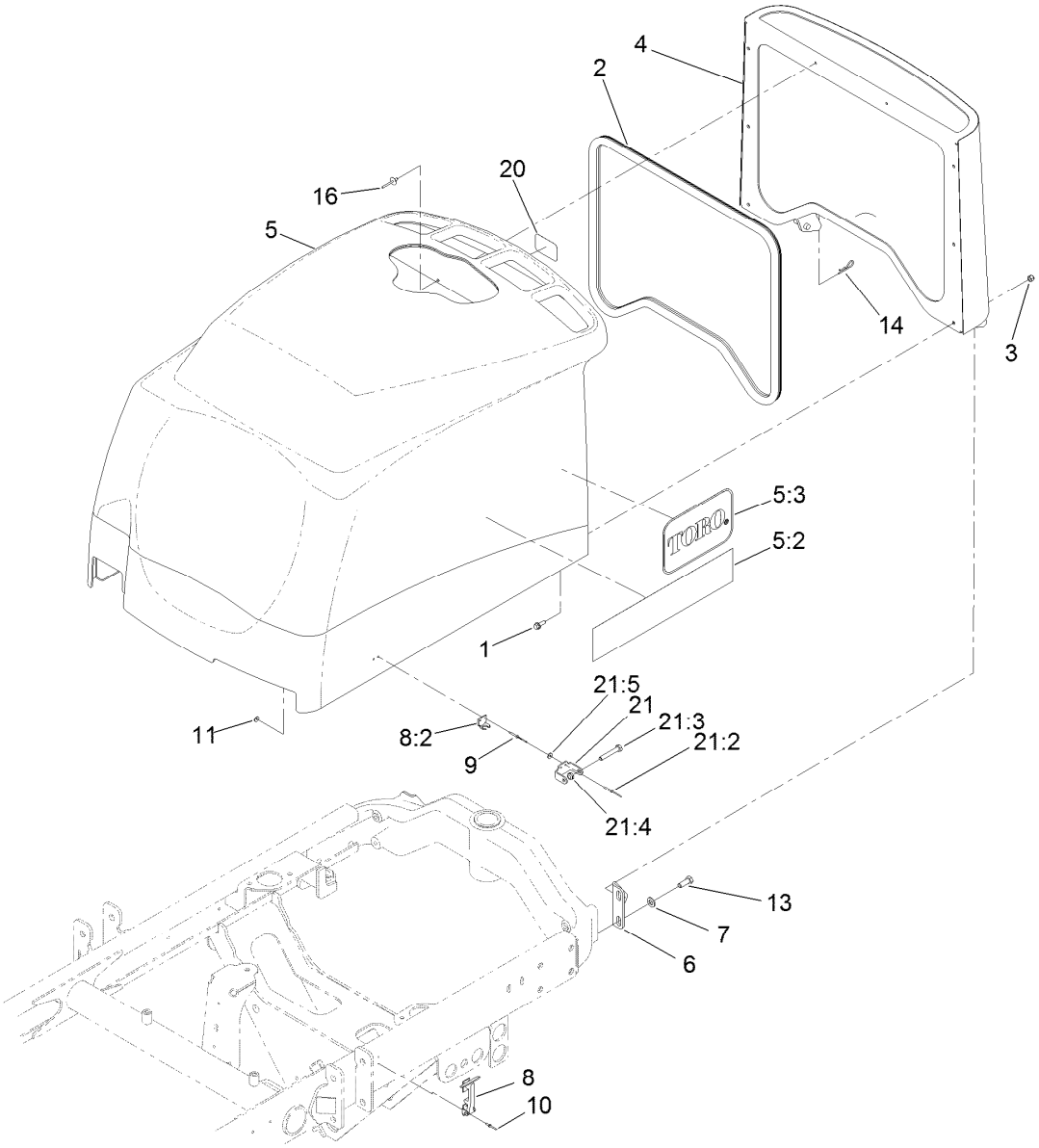


# Hood and Screen Assembly

| Ref. | Part Number | Qty. | Description |
|---|---|---|---|
| 1 | 3234-4 | 6 | Screw-HHF |
| 2 | 100-4932 | 1 | Trim-Seal |
| 3 | 3296-42 | 6 | Nut-Lock, NI |
| 4 | 104-4853-03 | 1 | Screen-Hood |
| 5 | 127-8598 | 1 | Hood ASM |
| 5:2 | 127-8595 | 2 | Decal-Hood |
| 5:3 | 62-7400 | 2 | Decal-Toro Logo |
| 6 | 95-8728 | 2 | Bracket-Pivot, Hood |
| 7 | 3256-24 | 8 | Washer-Plain |
| 8 | 59-9740 | 2 | Flex Draw Latch ASM |
| 8:2 | 249-40 | 1 | Keeper |
| 9 | 107-0333 | 4 | Rivet-Pop |

| Ref. | Part Number | Qty. | Description |
|---|---|---|---|
| 10 | 3290-55 | 4 | Rivet-Pop |
| 11 | 3269-10 | 4 | Washer-Back |
| 13 | 323-6 | 4 | Screw-HH |
| 14 | 3290-467 | 1 | Pin-Hair |
| 16 | 3269-21 | 2 | Rivet-Pop |
| 20 | 110-7135 | 1 | Decal-Toro |
| 21 | 119-2004 | 1 | CE Latch Kit |
| 21:2 | 107-0333 | 2 | Rivet-Pop |
| 21:3 | 322-10 | 1 | Screw-HH |
| 21:4 | 3296-47 | 1 | Nut-Lock,NI |
| 21:5 | 3269-10 | 2 | Washer-Back |

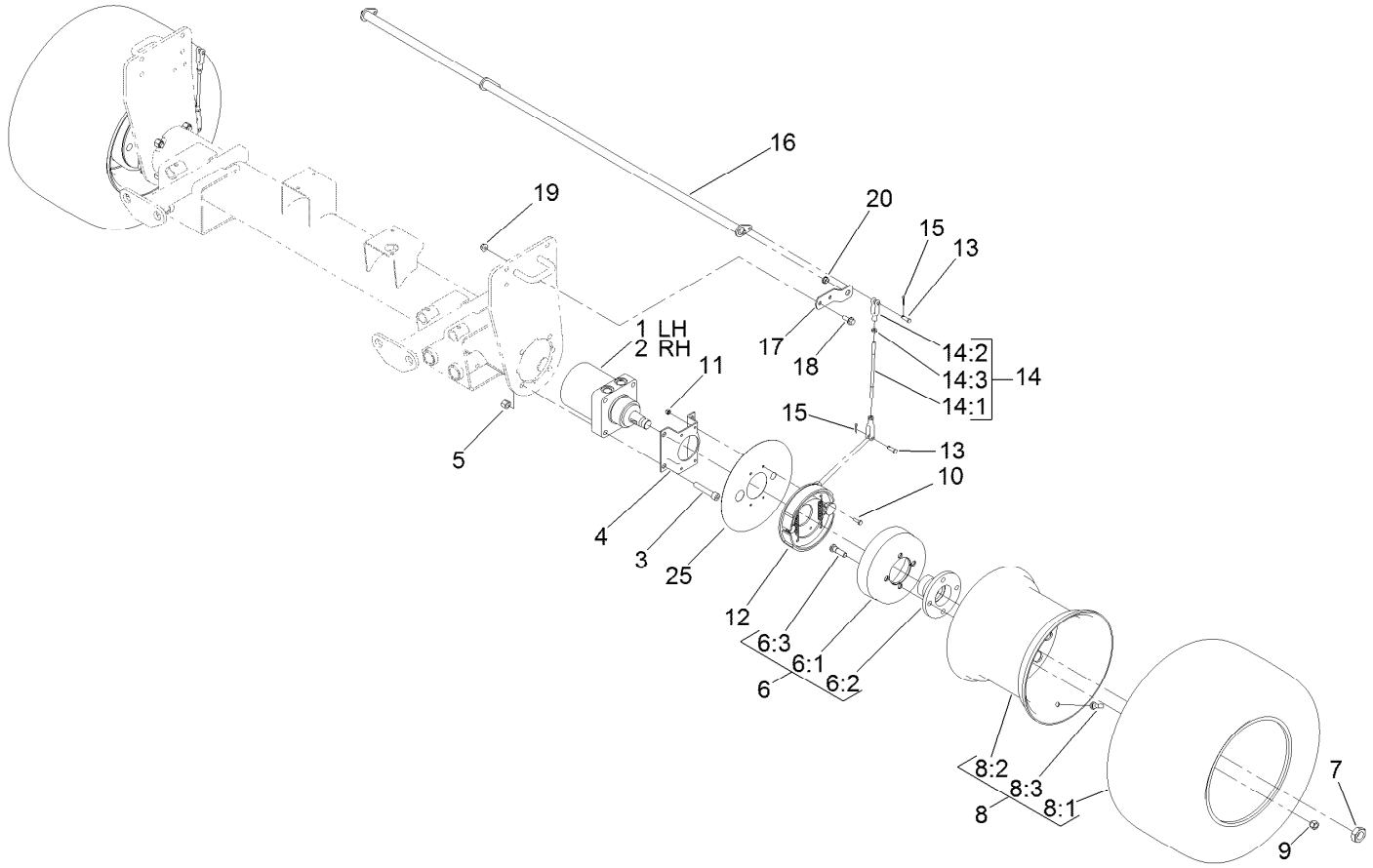


# Wheel and Brake Assembly

| Ref. | Part Number | Qty. | Description |
|---|---|---|---|
| 1 | 110-8785 | 1 | HYD Motor ASM (CCW) |
| 2 | 110-8786 | 1 | HYD Motor ASM (CW) |
| 3 | 3274-93 | 8 | Screw-HSH |
| 4 | 84-2000-03 | 2 | Bracket-Brake |
| 5 | 3296-23 | 8 | Nut-Lock, NI |
| 6 | 127-8568 | 2 | Hub ASM |
| 6:1 | 127-8536 | 1 | Brake Drum |
| 6:2 | 93-6838-03 | 1 | Hub-Wheel |
| 6:3 | 85-6540 | 4 | Stud-Drive |
| 7 | 26-3790 | 2 | Nut-Lock |
| 8 | | 2 | Tire ASM ● |
| 8:1 | 120-2114 | 1 | Tire-Smooth |
| 8:2 | 120-2115 | 1 | Wheel-12 Inch |
| 8:3 | 232-27 | 1 | Stem-Valve |
| 9 | 242-50 | 8 | Nut-Lug |

| Ref. | Part Number | Qty. | Description |
|---|---|---|---|
| 10 | 321-5 | 8 | Screw-HH |
| 11 | 3296-42 | 8 | Nut-Lock, NI |
| 12 | 127-8535 | 2 | Brake ASM |
| 13 | 283-1 | 4 | Pin-Clevis |
| 14 | 127-8538 | 2 | Brake Lever ASM |
| 14:1 | 127-8537 | 1 | Rod-Brake |
| 14:2 | 1-303105 | 2 | Yoke-Adjustable |
| 14:3 | 3220-2 | 2 | Nut-Jam |
| 15 | 3272-10 | 4 | Pin-Cotter |
| 16 | 127-8434-03 | 1 | Shaft-Pivot, Brake |
| 17 | 95-8683 | 2 | Bracket-Pivot, Brake |
| 18 | 3234-11 | 4 | Screw-HHF |
| 19 | 104-8301 | 4 | Nut-HF, NI |
| 20 | 256-156 | 2 | Bushing-Flange |
| 25 | 136-8006-03 | 2 | Shield-Wheel Rim |

● Not serviced separately

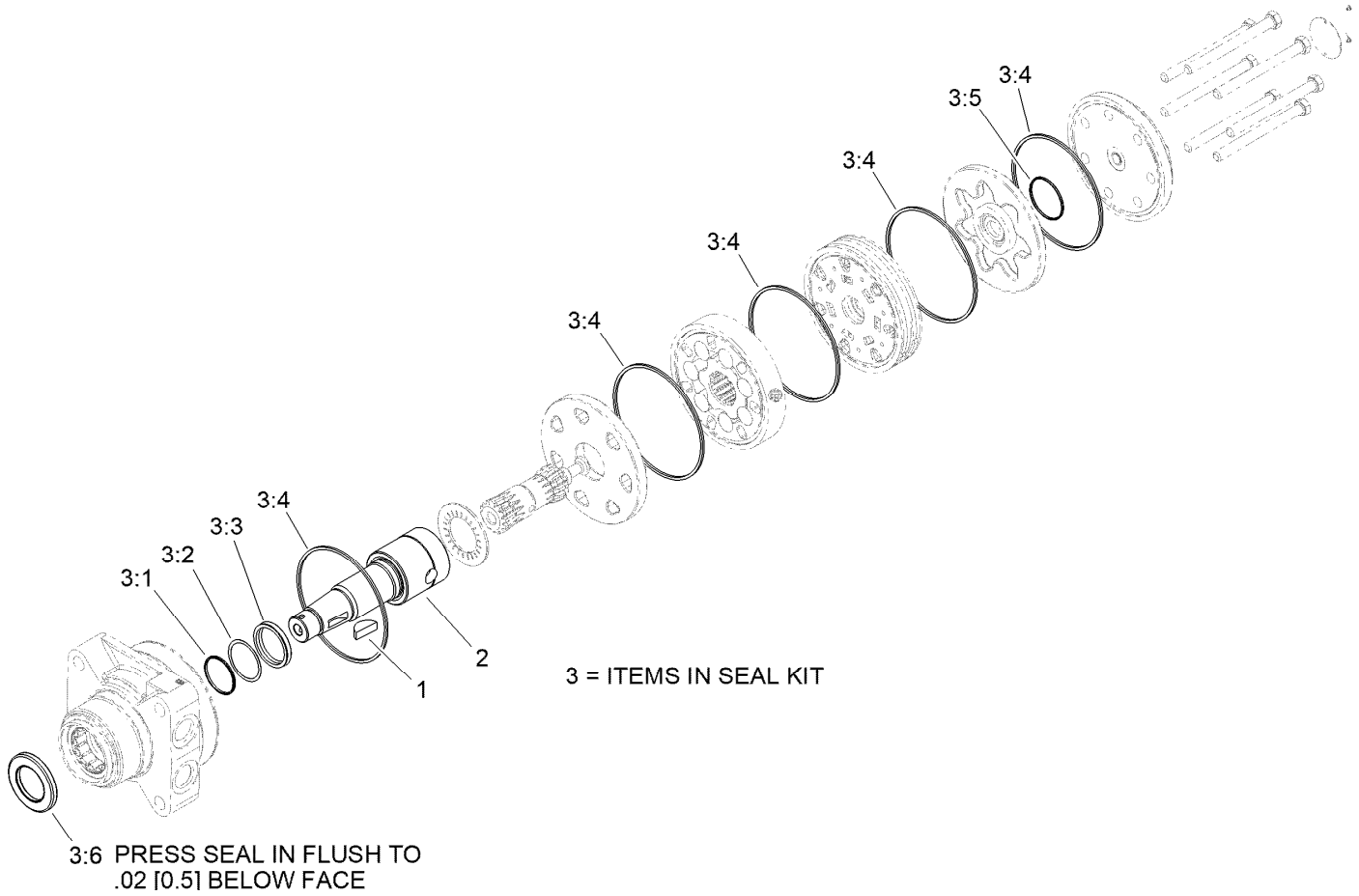


# Hydraulic Motor Assembly No. 110-8786

| *Ref.* | *Part Number* | *Qty.* | *Description* |
|---|---|---|---|
| 1 | 3257-42 | 1 | Key-Woodruff |
| 2 | 99-3090 | 1 | Shaft-Coupling |
| 3 | 100-6131 | 1 | Seal Kit |
| 3:1 | | 1 | Ring-Back Up ● |
| 3:2 | | 1 | Washer-Back Up ● |
| 3:3 | | 1 | Seal-Shaft ● |
| 3:4 | | 5 | Seal-Ring ● |
| 3:5 | | 1 | Seal-Commutator ● |
| 3:6 | | 1 | Seal-Dirt And Water ● |

● Not serviced separately

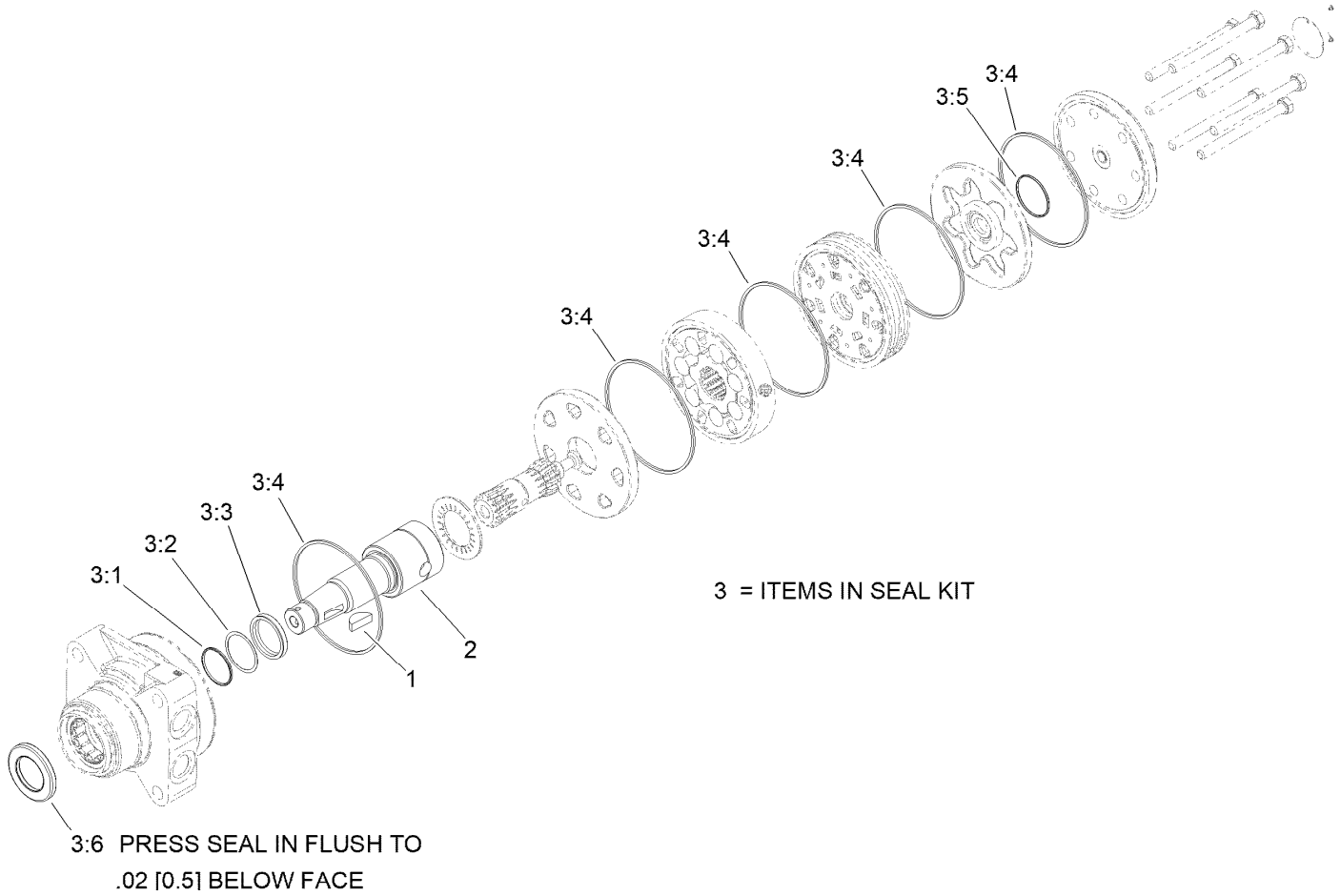


# Hydraulic Motor Assembly No. 110-8785

| *Ref.* | *Part Number* | *Qty.* | *Description* |
|---|---|---|---|
| 1 | 3257-42 | 1 | Key-Woodruff |
| 2 | 99-3090 | 1 | Shaft-Coupling |
| 3 | 100-6131 | 1 | Seal Kit |
| 3:1 | | 1 | Ring-Back Up ● |
| 3:2 | | 1 | Washer-Back Up ● |
| 3:3 | | 1 | Seal-Shaft ● |
| 3:4 | | 5 | Seal-Ring ● |
| 3:5 | | 1 | Seal-Commutator ● |
| 3:6 | | 1 | Seal-Dirt And Water ● |

● Not serviced separately

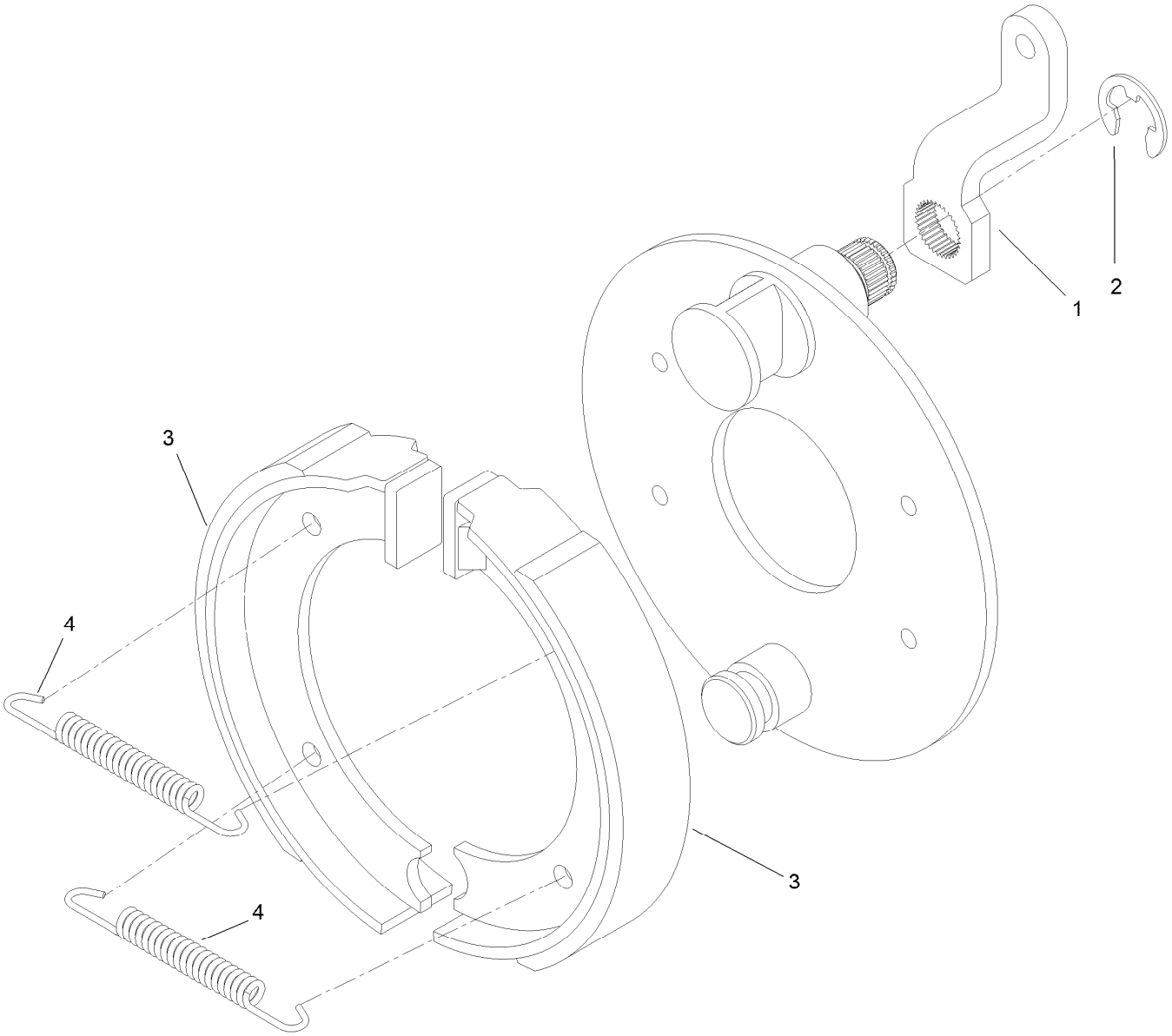


# Brake Assembly No. 127-8535

| Ref. | Part Number | Qty. | Description |
|---|---|---|---|
| 1 | 127-8567 | 1 | Lever |
| 2 | 127-8566 | 1 | E-Clip, 15MM External |
| 3 | 127-8570 | 2 | Brake-Shoe |
| 4 | 127-8569 | 2 | Brake-Spring |

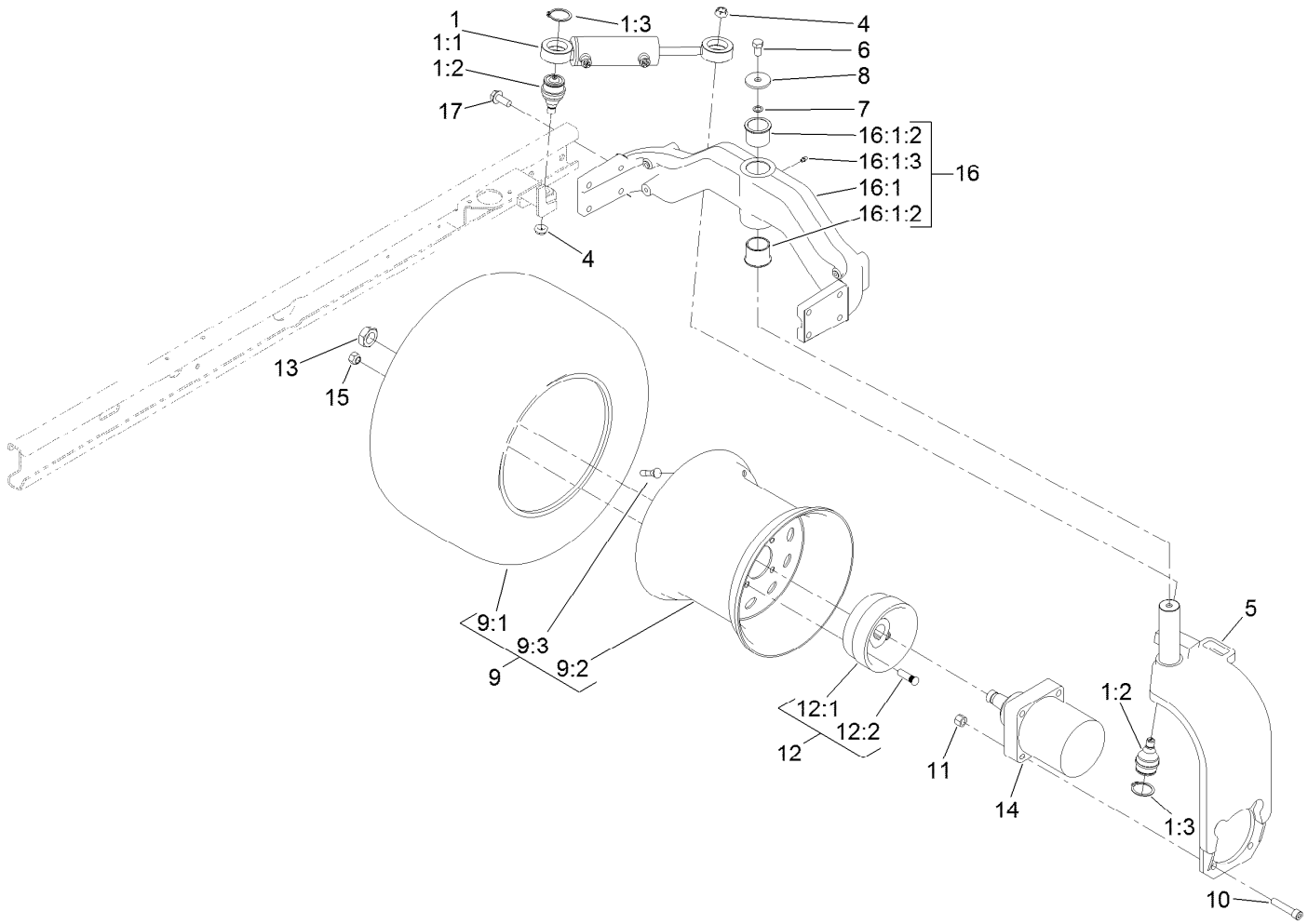


# Rear Fork Assembly

| Ref. | Part Number | Qty. | Description |
|---|---|---|---|
| 1 | 133-4912 | 1 | Steering Cylinder ASM |
| 1:1 | 121-7835 | 1 | Steering Cylinder ASM |
| 1:2 | 121-3605 | 2 | Ball Joint |
| 1:3 | 32151-104 | 2 | Ring-Retaining, External |
| 4 | 121-3611 | 2 | Nut-Hex, Flextop |
| 5 | 127-8577-01 | 1 | Fork-Rear |
| 6 | 325-3 | 1 | Screw-HH |
| 7 | 3255-2 | 1 | Washer-Lock, EXT |
| 8 | 75-7730 | 1 | Washer-Thrust |
| 9 | | 1 | Tire ASM ● |
| 9:1 | 120-2114 | 1 | Tire-Smooth |
| 9:2 | 120-2115 | 1 | Wheel-12 Inch |
| 9:3 | 232-27 | 1 | Stem-Valve |

| Ref. | Part Number | Qty. | Description |
|---|---|---|---|
| 10 | 3274-71 | 4 | Screw-HSH |
| 11 | 3296-23 | 4 | Nut-Lock, NI |
| 12 | 103-0590 | 1 | Wheel Hub ASM |
| 12:1 | 103-0589 | 1 | Hub-Wheel |
| 12:2 | 1-633926 | 4 | Stud-Wheel |
| 13 | 26-3790 | 1 | Nut-Lock |
| 14 | 95-8694 | 1 | HYD Motor ASM |
| 15 | 242-50 | 4 | Nut-Lug |
| 16 | 127-8576-03 | 1 | Rear Casting ASM |
| 16:1 | | 1 | Casting-Rear ● |
| 16:1:2 | 127-8572 | 2 | Bushing-Flange |
| 16:1:3 | 302-5 | 1 | Fitting-Grease |
| 17 | 3234-38 | 8 | Screw-HHF |

● Not serviced separately

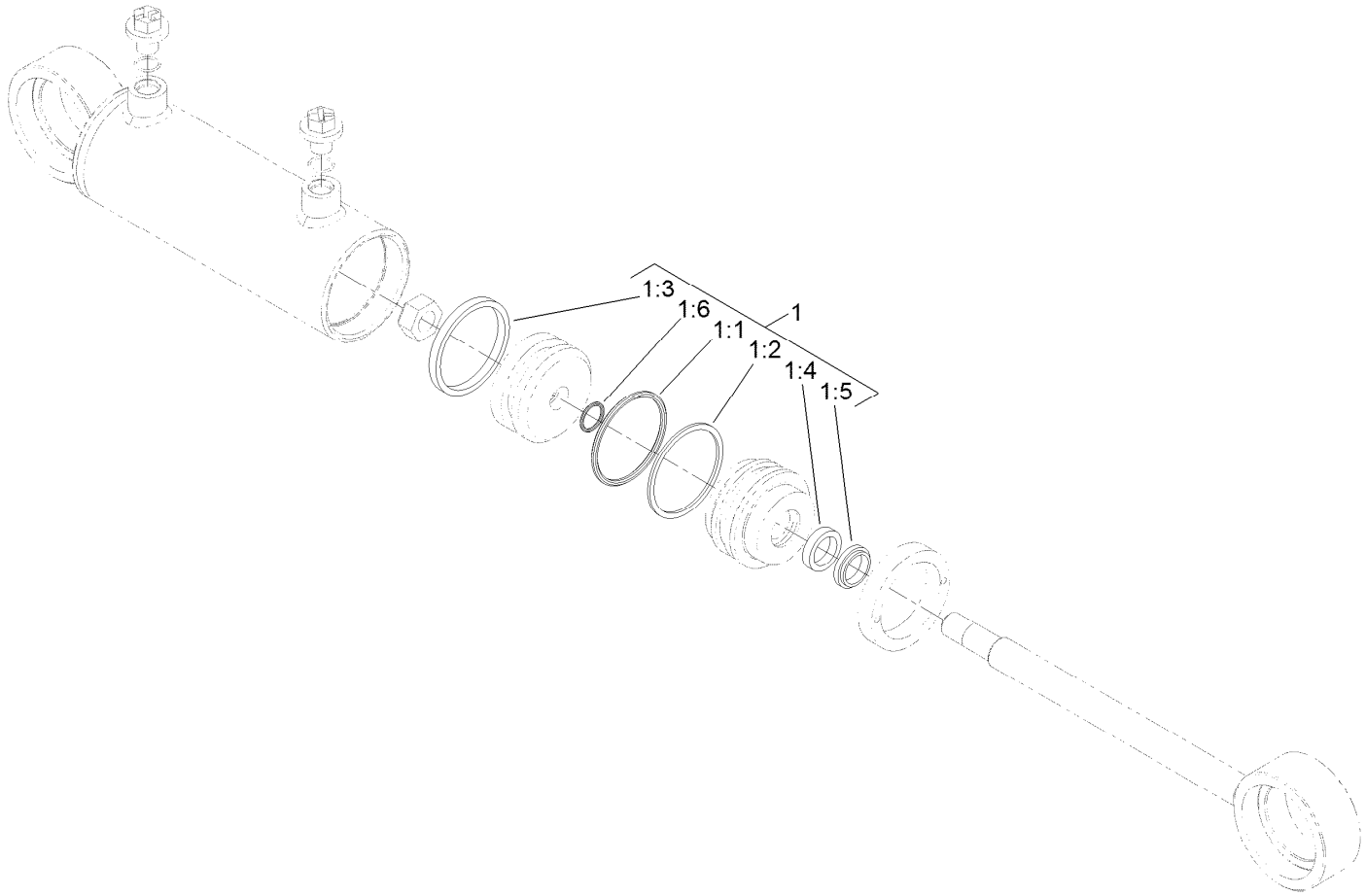


# Steering Cylinder Assembly No. 121-7835

| *Ref.* | *Part Number* | *Qty.* | *Description* |
|---|---|---|---|
| 1 | 121-7844 | 1 | Kit-Seal |
| 1:1 | | 1 | O-Ring ● |
| 1:2 | | 1 | Backup ● |
| 1:3 | | 1 | Psp Seal ● |
| 1:4 | | 1 | Bs Seal ● |
| 1:5 | | 1 | Dust Seal-Dt ● |
| 1:6 | | 1 | O-Ring ● |

● Not serviced separately

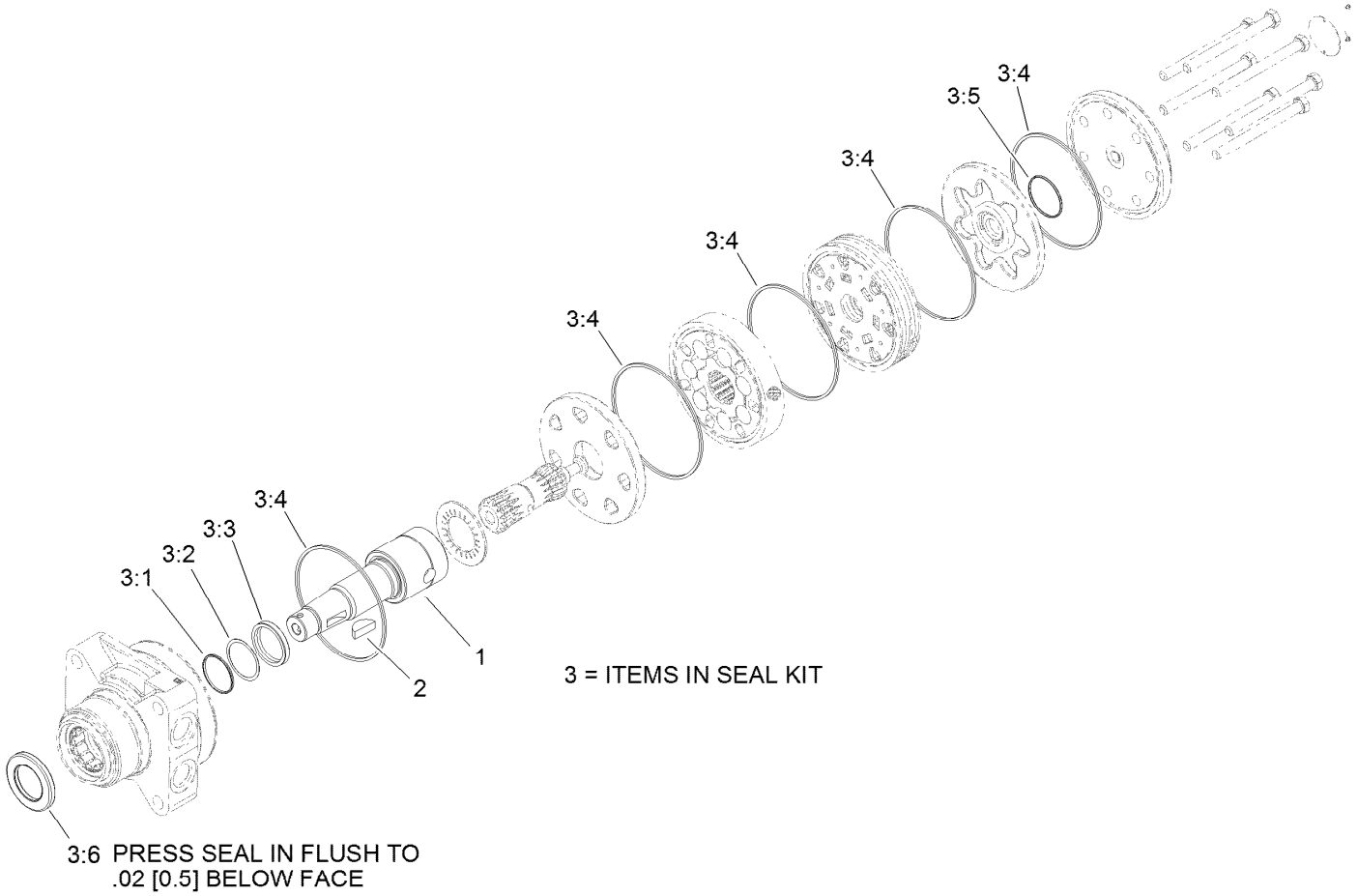


# Hydraulic Motor Assembly No. 95-8694

| *Ref.* | *Part Number* | *Qty.* | *Description* |
|---|---|---|---|
| 1 | 99-3090 | 1 | Shaft-Coupling |
| 2 | 3257-42 | 1 | Key-Woodruff |
| 3 | 100-6131 | 1 | Seal Kit |
| 3:1 | | 1 | Ring-Back Up ● |
| 3:2 | | 1 | Washer-Back Up ● |
| 3:3 | | 1 | Seal-Shaft ● |
| 3:4 | | 5 | Seal-Ring ● |
| 3:5 | | 1 | Seal-Commutator ● |
| 3:6 | | 1 | Seal-Dirt And Water ● |

● Not serviced separately

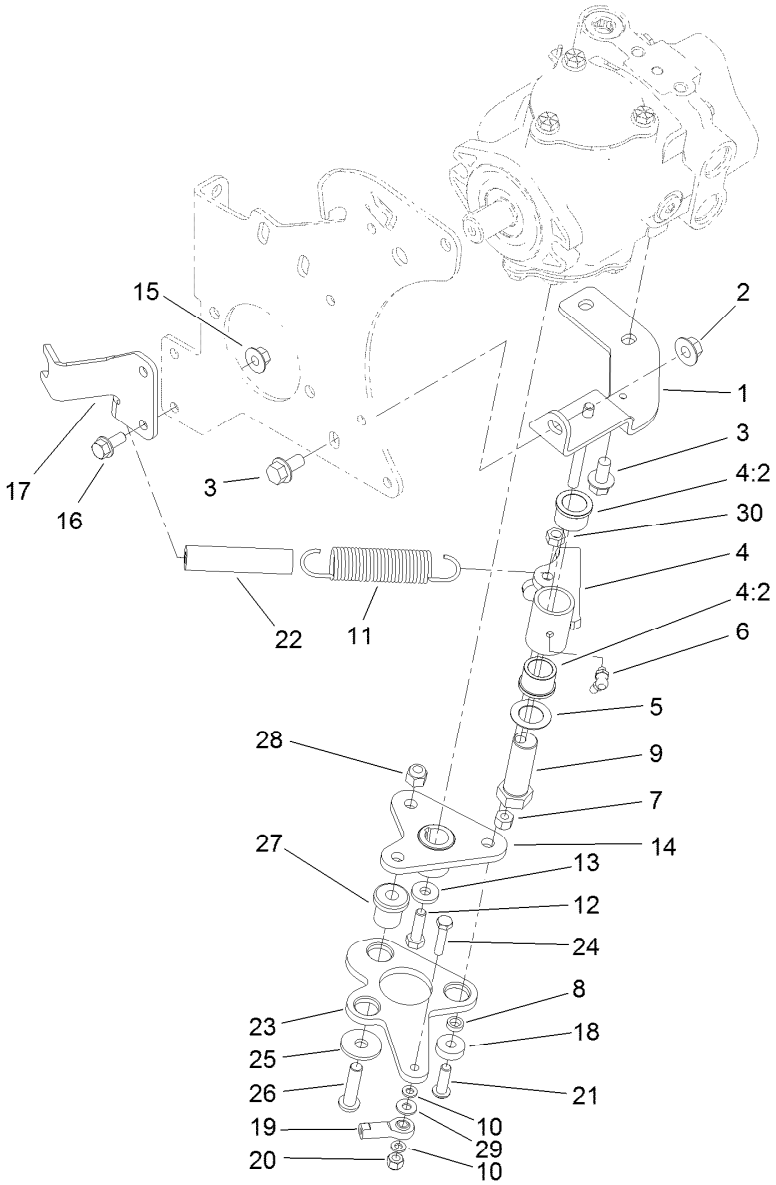


# Neutral Arm Assembly

| Ref. | Part Number | Qty. | Description |
|---|---|---|---|
| 1 | 95-8960-03 | 1 | Bracket-Neutral |
| 2 | 32128-43 | 1 | Nut-Flange |
| 3 | 3234-1 | 3 | Screw-HHF |
| 4 | 104-0422 | 1 | Neutral Arm ASM |
| 4:2 | 256-113 | 2 | Bushing-Flange |
| 5 | 3-6498 | 1 | Washer-Thrust |
| 6 | 302-60 | 1 | Fitting-Grease |
| 7 | 3296-29 | 1 | Nut-Lock, NI |
| 8 | 100-4817 | 1 | Spacer |
| 9 | 76-8640 | 1 | Stud-Traction |
| 10 | 33093-00 | 2 | Washer-Flat |
| 11 | 94-1369 | 1 | Spring-Extension |
| 12 | 3210-6 | 1 | Screw-HH |
| 13 | 88-7200 | 1 | Washer-Flat |
| 14 | 120-5566 | 1 | Hub |
| 15 | 32128-44 | 2 | Nut |

| Ref. | Part Number | Qty. | Description |
|---|---|---|---|
| 16 | 3234-5 | 2 | Screw-HHF |
| 17 | 104-0464-03 | 1 | Bracket-Support, Cable |
| 18 | 251-259 | 1 | Bearing-Ball |
| 19 | 2411-41 | 1 | Rod End-Ball Joint |
| 20 | 3296-42 | 1 | Nut-Lock, NI |
| 21 | 3274-104 | 1 | Screw-HSBH |
| 22 | 99-3556 | 1 | Hose |
| 23 | 99-3594-03 | 1 | Lever-Pump |
| 24 | 321-8 | 1 | Screw-HH |
| 25 | 2844 | 3 | Washer |
| 26 | 95-3857 | 3 | Screw-HSBH |
| 27 | 63-9750 | 3 | Mount |
| 28 | 3296-39 | 3 | Nut-Lock, NI |
| 29 | 3256-22 | 1 | Washer-Flat |
| 30 | 32153-3 | 1 | Nut-Hex, Side Deform |

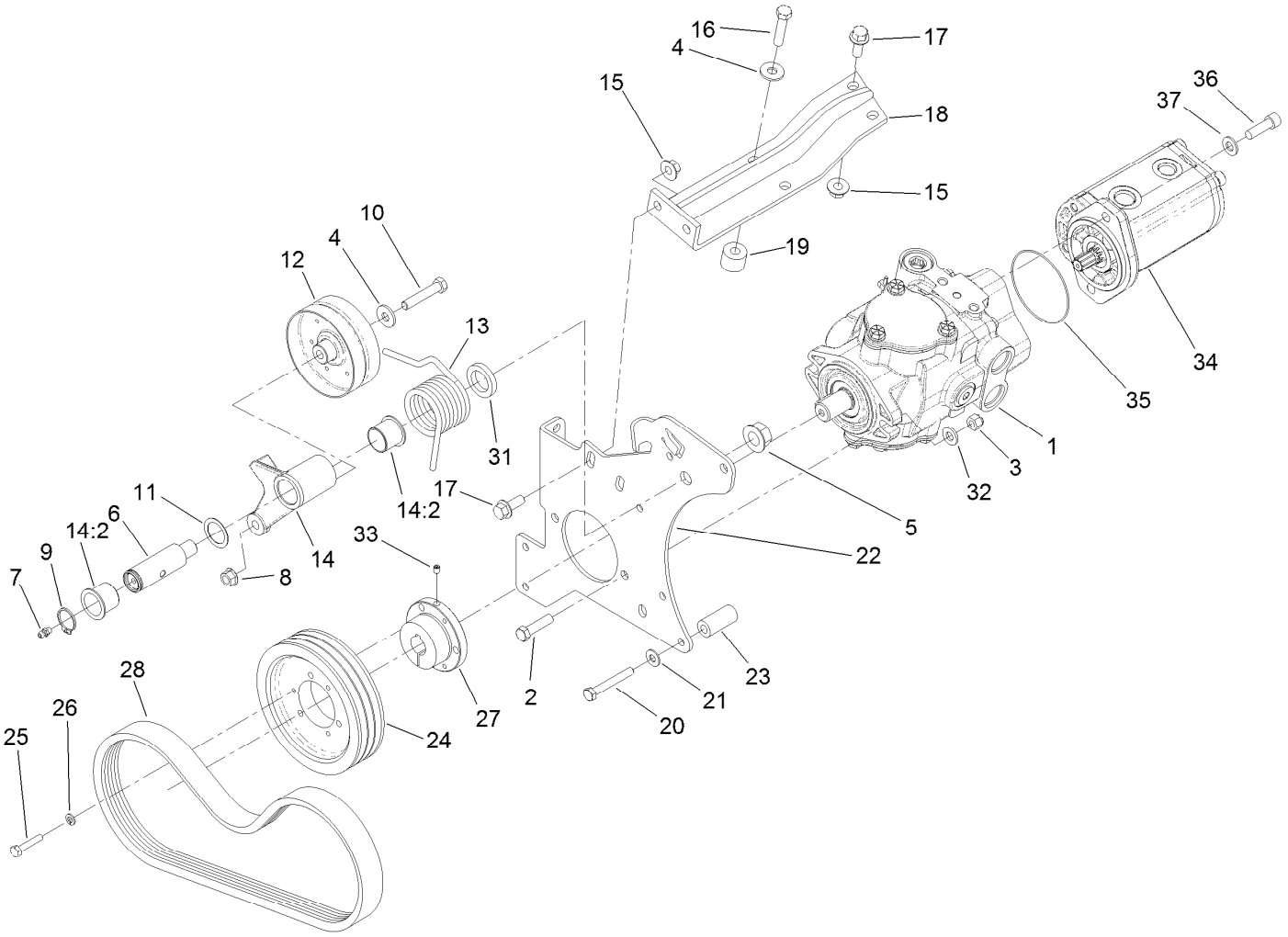


# Piston Pump and Gear Pump Assembly

| Ref. | Part Number | Qty. | Description |
|---|---|---|---|
| 1 | 104-4890 | 1 | Piston Pump ASM |
| 2 | 323-8 | 2 | Screw-HH |
| 3 | 3296-39 | 2 | Nut-Lock, NI |
| 4 | 80-6990 | 2 | Washer-Hardened |
| 5 | 32128-54 | 1 | Nut-HF |
| 6 | 99-3624 | 1 | Shaft-Pivot, Idler |
| 7 | 302-5 | 1 | Fitting-Grease |
| 8 | 32128-21 | 1 | Nut-HF Lock |
| 9 | 32151-36 | 1 | Ring-Retaining |
| 10 | 323-10 | 1 | Screw-HH |
| 11 | 74-1810 | 1 | Washer |
| 12 | 107-7834 | 1 | Pulley-Idler |
| 13 | 115-3488 | 1 | Spring-Torsion |
| 14 | 137-1653 | 1 | Idler Arm ASM |
| 14:2 | 126-1963 | 2 | Bushing-Pivot |
| 15 | 32128-43 | 4 | Nut-Flange |
| 16 | 323-19 | 2 | Screw-HH |
| 17 | 3234-11 | 4 | Screw-HHF |

| Ref. | Part Number | Qty. | Description |
|---|---|---|---|
| 18 | 99-3436-03 | 1 | Support-Pump |
| 19 | 99-3440 | 2 | Spacer |
| 20 | 33114-060 | 4 | Screw-HH |
| 21 | 87-8640 | 3 | Washer-Flat |
| 22 | 95-8933-03 | 1 | Plate-Mount, Pump |
| 23 | 95-8941 | 4 | Spacer-Mount, Pump |
| 24 | 99-3620 | 1 | Pulley-3V, Pump |
| 25 | 321-13 | 3 | Screw-HH |
| 26 | 3253-3 | 3 | Washer-Lock |
| 27 | 100-4813 | 1 | Bushing-Lock, Taper |
| 28 | 99-3619 | 1 | Belt-3V |
| 31 | 99-3625 | 1 | Spacer-Arm, Idler |
| 32 | 100-4852 | 2 | Washer-Hardened |
| 33 | 3245-7 | 1 | Screw-Set |
| 34 | 121-7841 | 1 | HYD Gear Pump ASM |
| 35 | 60-3520 | 1 | O-Ring |
| 36 | 323-7 | 2 | Screw-HH |
| 37 | 3256-24 | 4 | Washer-Plain |

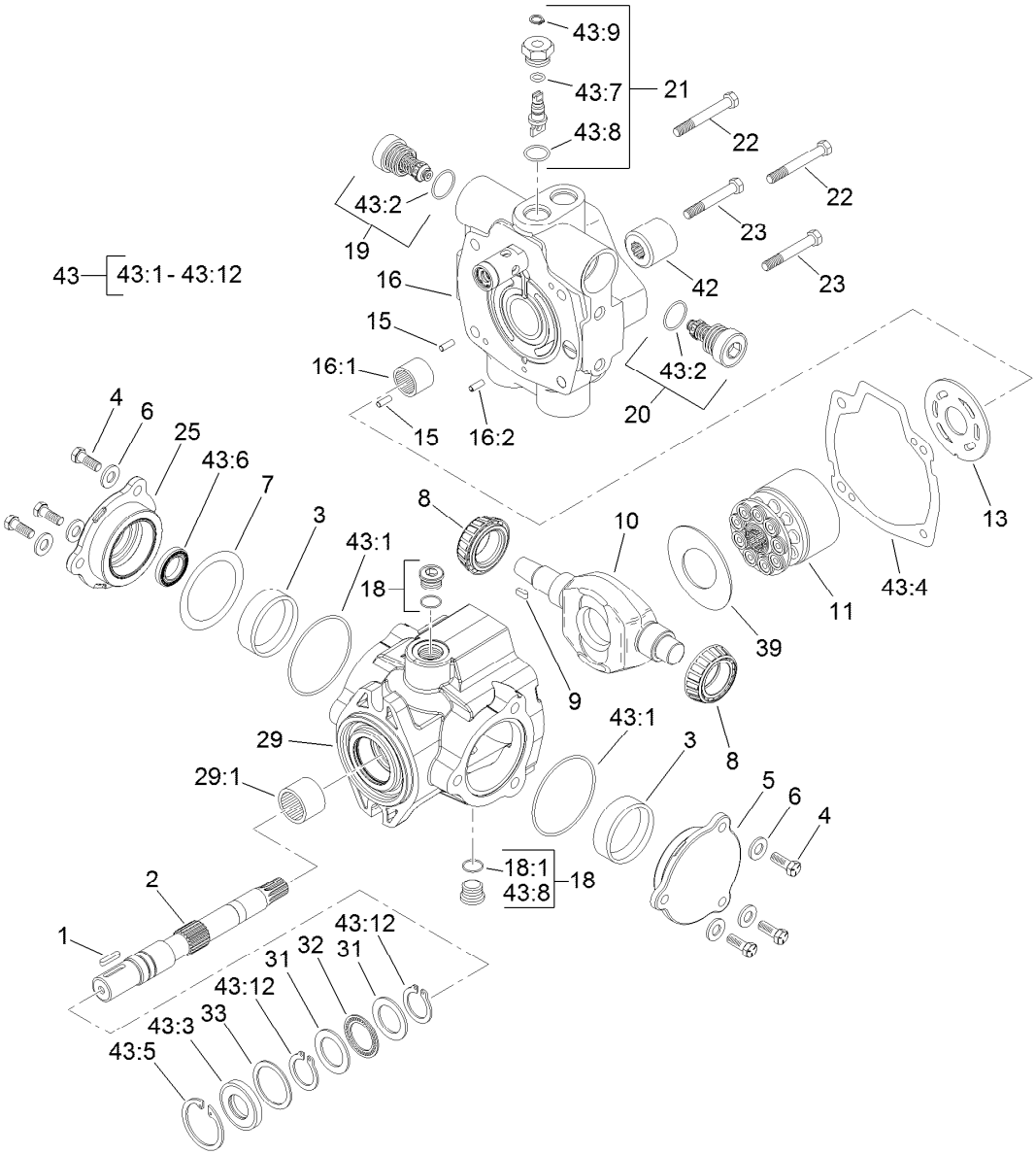


# Hydraulic Pump Assembly No. 104-4890

| Ref. | Part Number | Qty. | Description |
|---|---|---|---|
| 1 | 94-3645 | 1 | Key |
| 2 | 94-6359 | 1 | Shaft-Drive |
| 3 | 104-4046 | 2 | Bearing-Cup |
| 4 | 98-4640 | 6 | Screw-Cap |
| 5 | 98-4644 | 1 | Plate-Cover |
| 6 | 105-9762 | 6 | Washer |
| 7 | 100-3182 | 2 | Shim Kit |
| 8 | 98-4639 | 2 | Bearing-Cone |
| 9 | 94-3646 | 1 | Key |
| 10 | 104-4888 | 1 | Swashplate |
| 11 | 76-6070 | 1 | Rotating Kit |
| 13 | 104-0429 | 1 | Plate-Valve |
| 15 | 76-6150 | 2 | Pin-Dowel |
| 16 | 105-3813 | 1 | Endcover Sub ASM |
| 16:1 | 94-6368 | 1 | Bearing |
| 16:2 | | 1 | Pin-Roll ■ |
| 18 | 74-9280 | 2 | Plug ASM |
| 18:1 | | 1 | O-Ring ■ |

| Ref. | Part Number | Qty. | Description |
|---|---|---|---|
| 19 | 104-4889 | 1 | Relief Valve ASM |
| 20 | 105-3812 | 1 | Valve-Check |
| 21 | 105-3811 | 1 | Valve-Bypass |
| 22 | 76-6170 | 2 | Capscrew |
| 23 | 76-6160 | 2 | Capscrew |
| 25 | 98-4645 | 1 | Plate-Cover |
| 29 | 100-3176 | 1 | Housing ASM |
| 29:1 | 94-6363 | 1 | Bearing |
| 31 | 252-71 | 2 | Washer-Thrust |
| 32 | 252-66 | 1 | Bearing-Thrust |
| 33 | 33-3720 | 1 | Washer |
| 39 | 98-4635 | 1 | Insert-Plate, Cam |
| 42 | 74-9040 | 1 | Coupler |
| 43 | 120-5754 | 1 | Seal Kit |
| 43:1 | | 2 | O-Ring ■ |
| 43:2 | | 2 | O-Ring ■ |
| 43:3 | | 1 | Seal-Shaft ■ |
| 43:4 | | 1 | Gasket ■ |

● Not illustrated

■ Not serviced separately

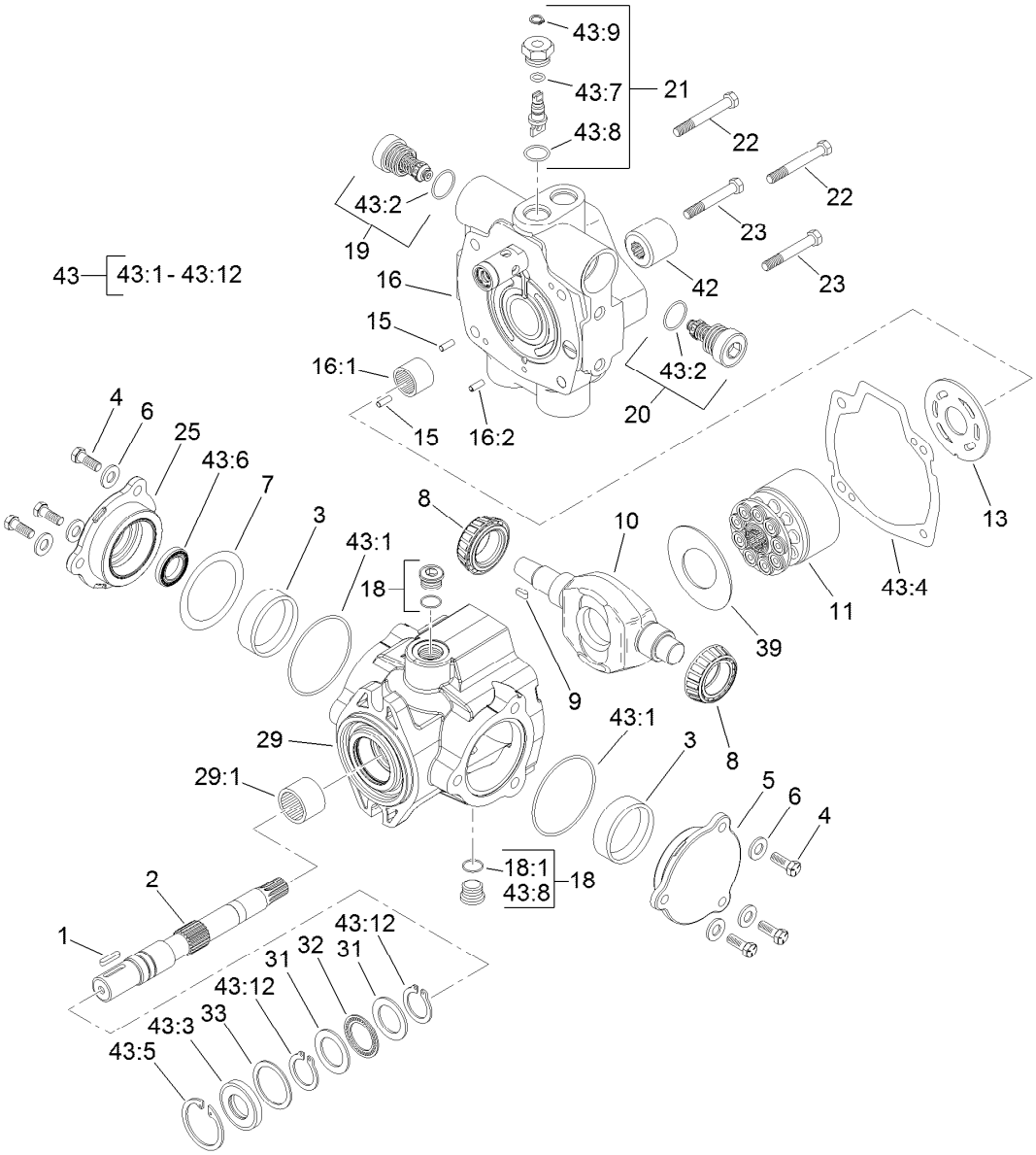


# Hydraulic Pump Assembly No. 104-4890 (continued)

| Ref. | Part Number | Qty. | Description |
|---|---|---|---|
| 43:5 | | 1 | Ring-Retaining ■ |
| 43:6 | | 1 | Seal-Shaft ■ |
| 43:7 | | 1 | O-Ring ■ |
| 43:8 | | 5 | O-Ring ■ |
| 43:9 | | 1 | Ring-Retaining ■ |

| Ref. | Part Number | Qty. | Description |
|---|---|---|---|
| 43:10 | | 1 | O-Ring ● ■ |
| 43:11 | | 1 | O Ring-Molded ● ■ |
| 43:12 | | 2 | Ring-Retaining ■ |
| 43:13 | | 1 | O-Ring ■ ● |

● Not illustrated

■ Not serviced separately

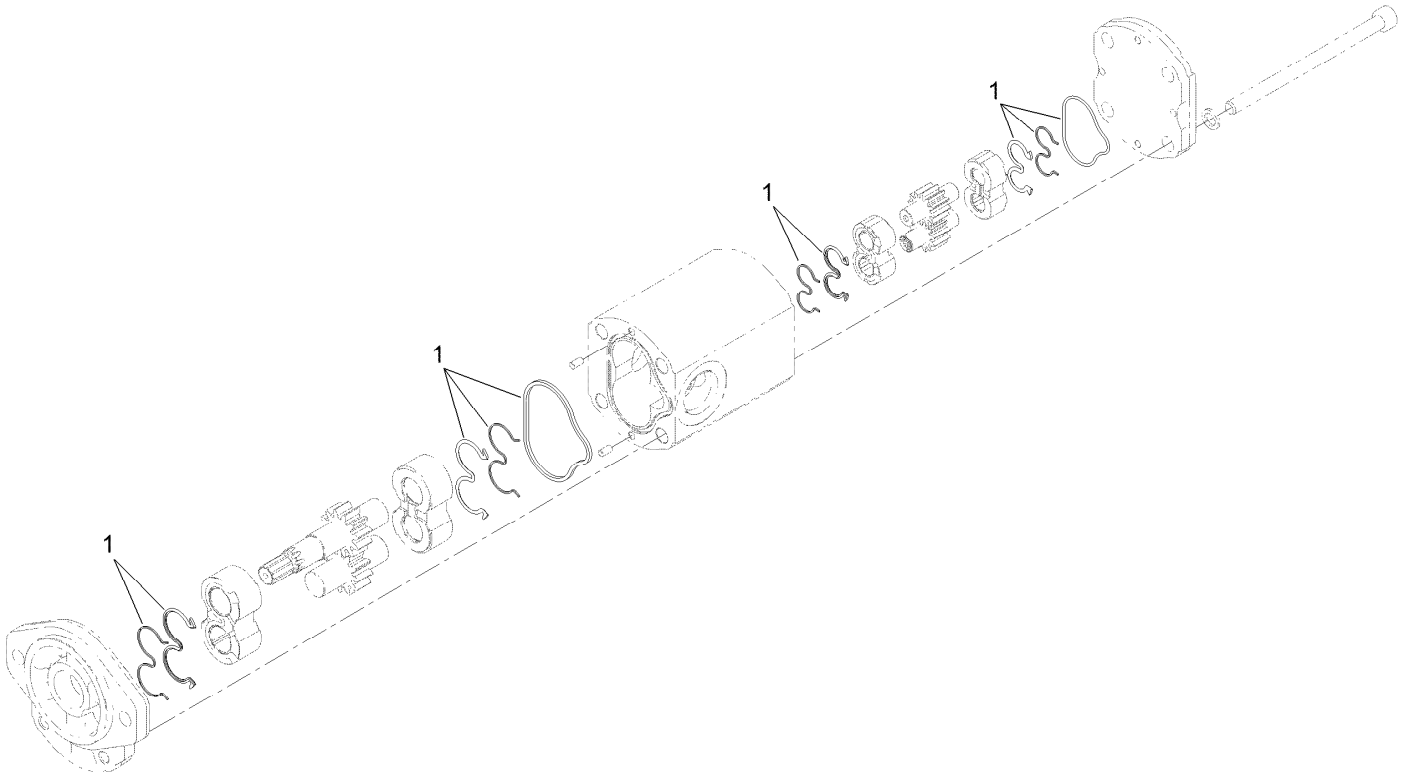


# Hydraulic Gear Pump Assembly No. 121-7841

| *Ref.* | *Part Number* | *Qty.* | *Description* |
|---|---|---|---|
| 1 | 119-7134 | 1 | Kit-Seal |

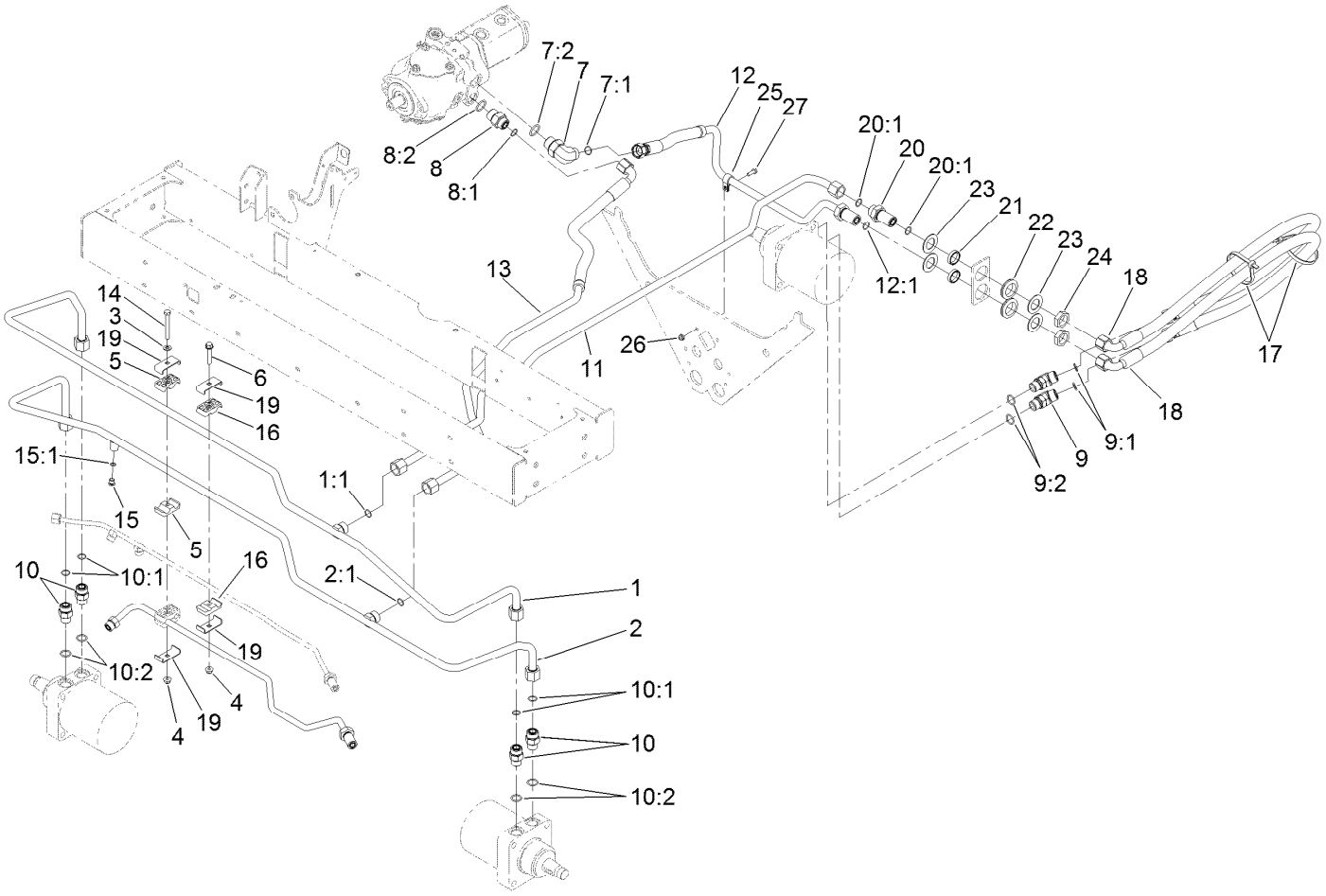


# Traction Hydraulic Assembly

| Ref. | Part Number | Qty. | Description |
|---|---|---|---|
| 1 | 127-8498 | 1 | Tube-ASM |
| 1:1 | 237-65 | 1 | O-Ring |
| 2 | 127-8499 | 1 | Tube-ASM |
| 2:1 | 237-65 | 1 | O-Ring |
| 3 | 3256-23 | 1 | Washer-Plain |
| 4 | 104-8300 | 2 | Nut-HF, NI |
| 5 | 56-7971 | 2 | Clamp-Tube |
| 6 | 94-5780 | 1 | Screw-HWH |
| 7 | 340-139 | 1 | Fitting-Elbow 90 |
| 7:1 | 237-81 | 1 | O-Ring |
| 7:2 | 237-65 | 1 | O-Ring |
| 8 | 340-8 | 1 | Fitting-Straight |
| 8:1 | 237-65 | 1 | O-Ring |
| 8:2 | 237-81 | 1 | O-Ring |
| 9 | 340-14 | 2 | Fitting-HYD, 45 DEG |
| 9:1 | 237-65 | 1 | O-Ring |
| 9:2 | 237-80 | 1 | O-Ring |
| 10 | 340-7 | 4 | Fitting-Straight |
| 10:1 | 237-65 | 1 | O-Ring |
| 10:2 | 237-80 | 1 | O-Ring |
| 11 | 127-8513 | 1 | Tube-HYD |

| Ref. | Part Number | Qty. | Description |
|---|---|---|---|
| 12 | 133-4911 | 1 | HYD Tube ASM |
| 12:1 | 237-65 | 1 | O-Ring |
| 13 | 127-8514 | 1 | Tube-HYD |
| 14 | 322-13 | 1 | Screw-HH |
| 15 | 353-990 | 1 | Plug ASM |
| 15:1 | 237-78 | 1 | O-Ring |
| 16 | 56-7970 | 2 | Clamp-Tube |
| 17 | 3334-945 | 2 | Tie-Cable |
| 18 | 119-3922 | 2 | Hose-HYD |
| 19 | 119-1419 | 4 | Plate-Clamp |
| 20 | 340-76 | 1 | Fitting-Bulkhead Union, Straight |
| 20:1 | 237-65 | 2 | O-Ring |
| 21 | 125-1984 | 2 | Spacer |
| 22 | 240-3 | 2 | Grommet-Rubber |
| 23 | 69-9010 | 4 | Washer |
| 24 | 340-74 | 2 | Nut-Lock, Bulkhead |
| 25 | 2412-87 | 1 | Clamp-Cable |
| 26 | 104-7201 | 1 | Nut-HF, NI |
| 27 | 321-4 | 1 | Screw-HH |

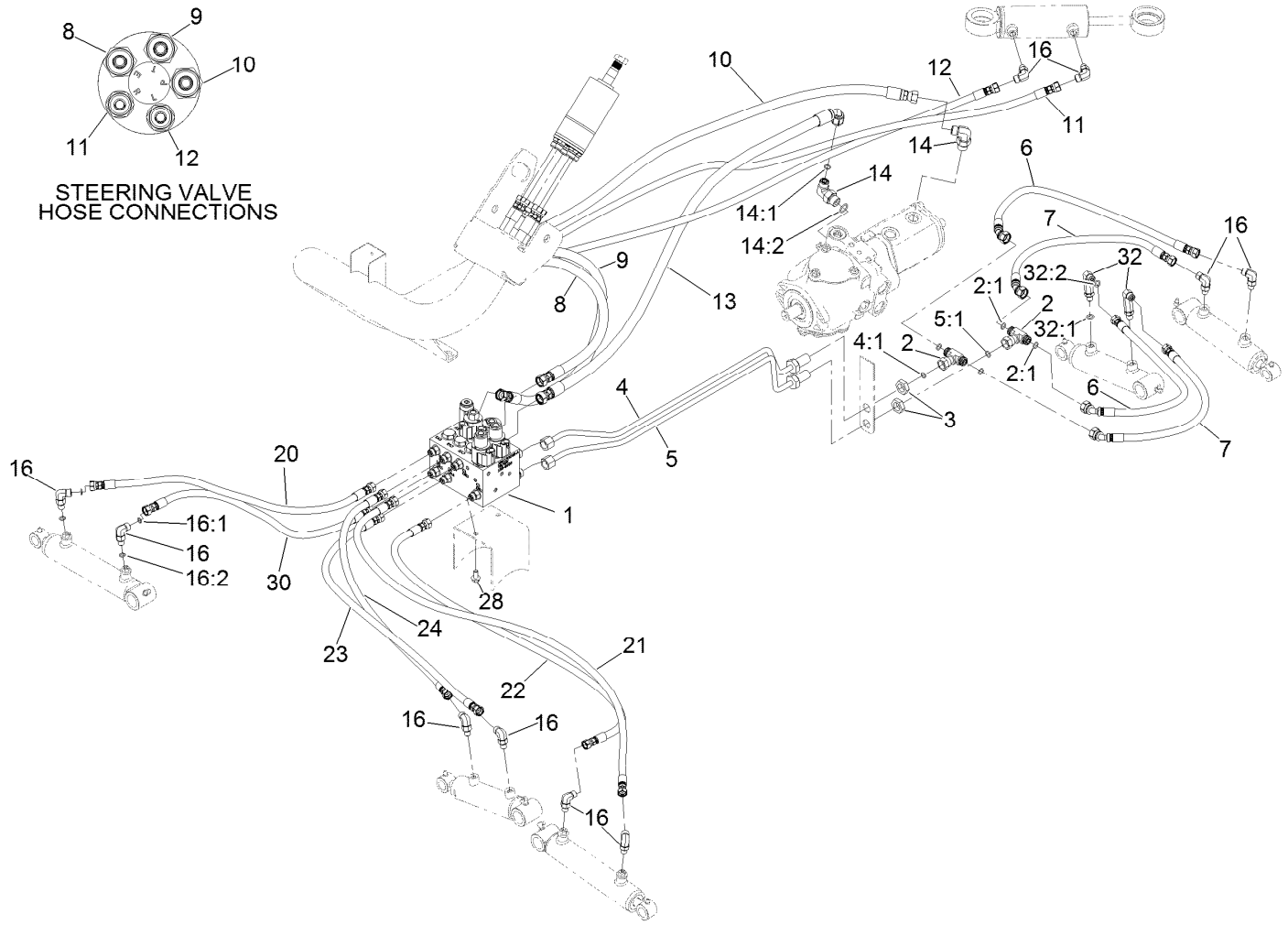


# Lift Hydraulic Assembly

| Ref. | Part Number | Qty. | Description |
|---|---|---|---|
| 1 | 138-6998 | 1 | Lift Manifold ASM |
| 2 | 340-166 | 2 | Fitting-Tee |
| 2:1 | 237-22 | 2 | O-Ring |
| 3 | 340-70 | 2 | Nut-Lock |
| 4 | 133-4926 | 1 | Tube-HYD |
| 4:1 | 237-22 | 1 | O-Ring |
| 5 | 133-4927 | 1 | Tube-HYD |
| 5:1 | 237-22 | 1 | O-Ring |
| 6 | 139-5978 | 2 | Hose-HYD |
| 7 | 139-5977 | 2 | Hose-HYD |
| 8 | 120-2060 | 1 | Hose-HYD |
| 9 | 138-4261 | 1 | Hose ASM-HYD HP |
| 10 | 119-2067 | 1 | Hose-HYD |
| 11 | 121-7836 | 1 | Hose-HYD |
| 12 | 108-5673 | 1 | Hose-HYD |
| 13 | 93-5386 | 1 | Hose ASM |

| Ref. | Part Number | Qty. | Description |
|---|---|---|---|
| 14 | 340-18 | 2 | Fitting-HYD, 90 DEG |
| 14:1 | 237-79 | 1 | O-Ring |
| 14:2 | 237-22 | 1 | O-Ring |
| 16 | 340-132 | 10 | Fitting-Elbow, 90 DEG |
| 16:1 | 237-78 | 1 | O-Ring |
| 16:2 | 237-21 | 1 | O-Ring |
| 20 | 108-6508 | 1 | Hose-HYD |
| 21 | 104-9323 | 1 | Hose-HYD |
| 22 | 108-6507 | 1 | Hose-HYD |
| 23 | 106-9674 | 1 | Hose-HYD |
| 24 | 92-7564 | 1 | Hose-HYD |
| 28 | 3234-7 | 2 | Screw-HHF |
| 30 | 108-6506 | 1 | Hose-HYD |
| 32 | 100-7695 | 2 | Fitting-Elbow 90 |
| 32:1 | 237-78 | 1 | O-Ring |
| 32:2 | 237-21 | 1 | O-Ring |

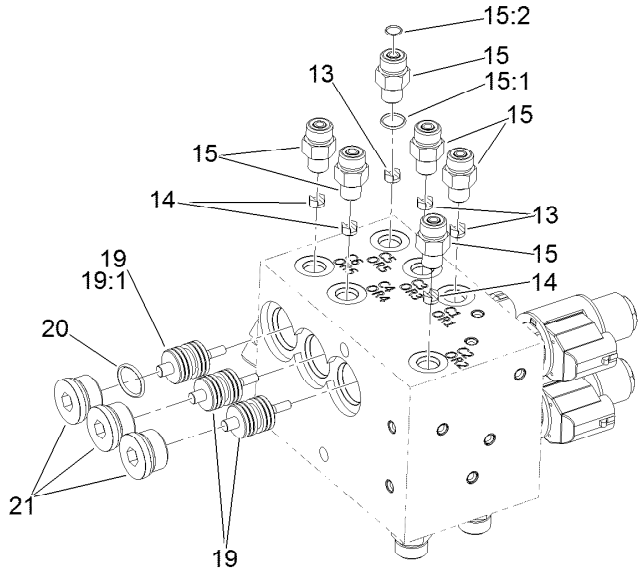


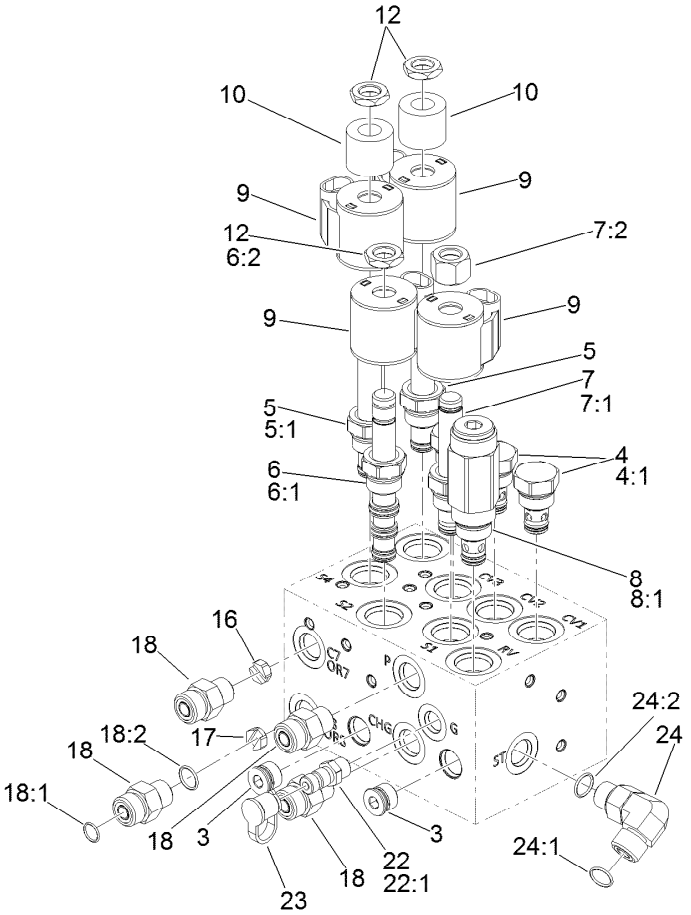


# Lift Manifold Assembly No. 138-6998

| Ref. | Part Number | Qty. | Description |
|---|---|---|---|
| 3 | 112-9213 | 2 | Plug |
| 4 | 110-9006 | 3 | Valve-Check |
| 4:1 | 105-9156 | 1 | Seal Kit |
| 5 | 136-6351 | 2 | Valve-Double Blocking |
| 5:1 | 107-7527 | 1 | Seal Kit |
| 6 | 120-1665 | 1 | Valve-Solenoid |
| 6:1 | 112-6520 | 1 | Seal Kit |
| 6:2 | 110-2634 | 1 | Nut-Coil |
| 7 | 107-7517 | 1 | Valve-Solenoid |
| 7:1 | 105-9156 | 1 | Seal Kit |
| 7:2 | 107-7812 | 1 | Nut-Solenoid |
| 8 | 120-1663 | 1 | Valve-Relief, 500 PSI |
| 8:1 | 105-9156 | 1 | Seal Kit |
| 9 | 110-0497 | 4 | Coil-Solenoid |
| 10 | 110-8909 | 2 | Spacer-Coil |
| 12 | 110-2634 | 3 | Nut-Coil |
| 13 | 121-7879 | 3 | Orifice-Control, Flow (0.040) |
| 14 | 110-8902 | 3 | Orifice-Control, Flow (0.046) |
| 15 | 340-92 | 6 | Fitting-Straight |

| Ref. | Part Number | Qty. | Description |
|---|---|---|---|
| 15:1 | 237-78 | 1 | O-Ring |
| 15:2 | 237-21 | 1 | O-Ring |
| 16 | 119-5342 | 1 | Orifice-Control, Flow (.035) |
| 17 | 119-2010 | 1 | Orifice-Control, Flow (0.055) |
| 18 | 340-2 | 4 | Fitting-Straight |
| 18:1 | 237-22 | 1 | O-Ring |
| 18:2 | 237-42 | 1 | O-Ring |
| 19 | 110-8901 | 3 | Piston-Pilot |
| 19:1 | 110-8900 | 1 | O-Ring |
| 20 | 110-8900 | 3 | O-Ring |
| 21 | 139-6024 | 3 | Plug-Socket, SAE |
| 22 | 354-77 | 1 | Fitting-Quick |
| 22:1 | 237-78 | 1 | O-Ring |
| 23 | 354-79 | 1 | Cap-Dust |
| 24 | 340-77 | 1 | Fitting-Elbow, 90 DEG |
| 24:1 | 237-22 | 1 | O-Ring |
| 24:2 | 237-42 | 1 | O-Ring |

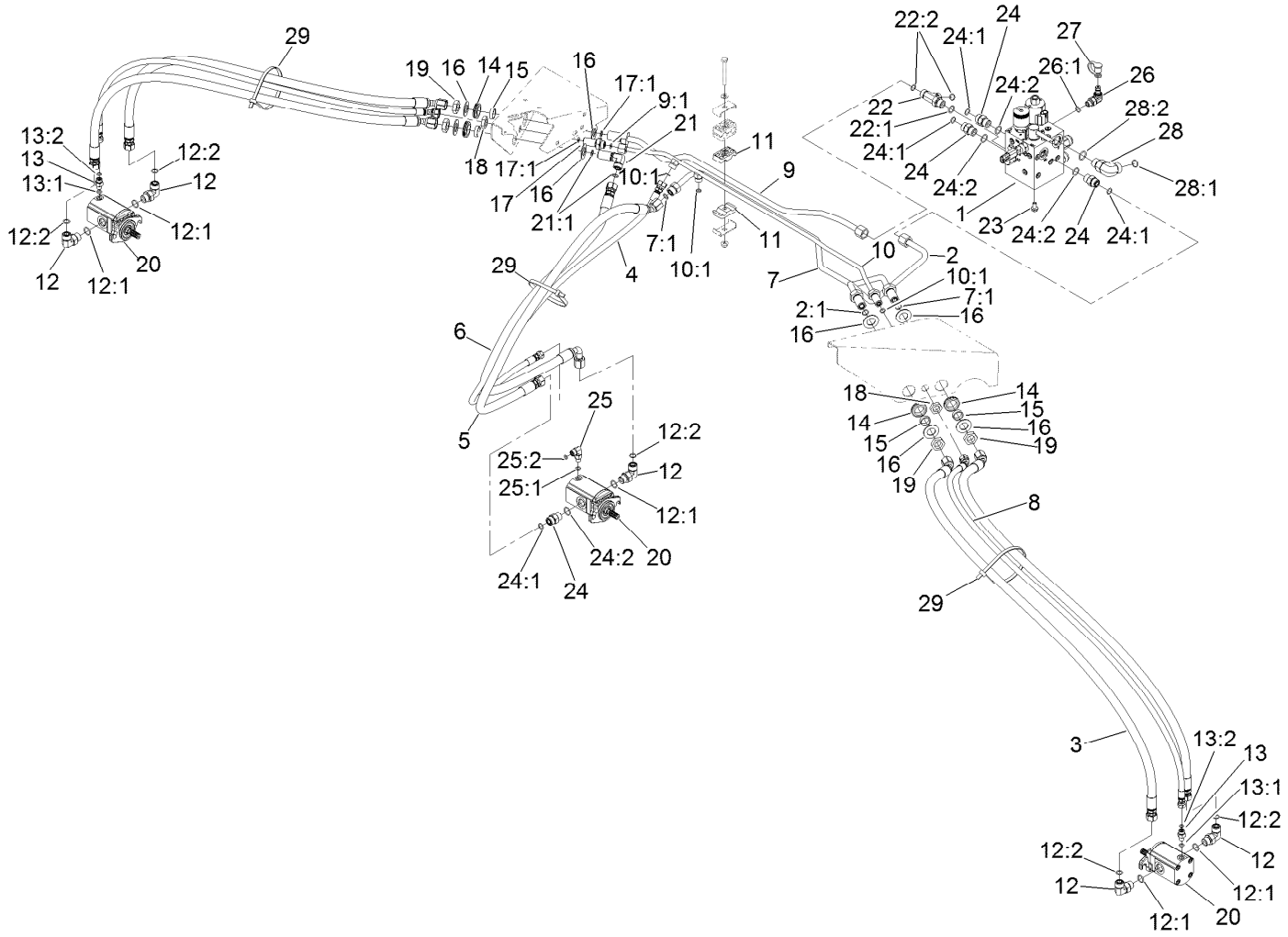


# Cutting Unit No. 1, 4 and 5 Hydraulic Assembly

| Ref. | Part Number | Qty. | Description |
|---|---|---|---|
| 1 | 139-6025 | 1 | Manifold ASM-Mow |
| 2 | 127-8511 | 1 | Tube-HYD |
| 2:1 | 237-30 | 1 | O-Ring |
| 3 | 139-5981 | 4 | Hose ASM |
| 4 | 139-5980 | 1 | Hose-HYD |
| 5 | 121-7861 | 1 | Hose-HYD |
| 6 | 139-5979 | 1 | Hose-HYD |
| 7 | 127-8551 | 1 | Tube-HYD |
| 7:1 | 237-30 | 2 | O-Ring |
| 8 | 139-5982 | 2 | Hose ASM |
| 9 | 127-8509 | 1 | Tube-HYD |
| 9:1 | 237-30 | 1 | O-Ring |
| 10 | 120-2104 | 1 | Tube-HYD |
| 10:1 | 237-22 | 3 | O-Ring |
| 11 | 56-7976 | 2 | Clamp-Tube |
| 12 | 340-98 | 5 | Fitting-Elbow, 90 DEG |
| 12:1 | 237-79 | 1 | O-Ring |
| 12:2 | 237-30 | 1 | O-Ring |
| 13 | 340-92 | 2 | Fitting-Straight |
| 13:1 | 237-78 | 1 | O-Ring |
| 13:2 | 237-21 | 1 | O-Ring |

| Ref. | Part Number | Qty. | Description |
|---|---|---|---|
| 14 | 240-5 | 4 | Grommet |
| 15 | 69-8960 | 4 | Spacer |
| 16 | 69-8930 | 8 | Washer |
| 17 | 340-71 | 1 | Fitting-Straight, Bulkhead |
| 17:1 | 237-22 | 2 | O-Ring |
| 18 | 340-70 | 2 | Nut-Lock |
| 19 | 340-127 | 4 | Nut-Bulkhead |
| 20 | 120-2072 | 3 | HYD Motor ASM |
| 21 | 93-9151 | 1 | Fitting-HYD |
| 21:1 | 237-30 | 2 | O-Ring |
| 22 | 340-109 | 1 | Fitting-Tee |
| 22:1 | 237-79 | 1 | O-Ring |
| 22:2 | 237-30 | 2 | O-Ring |
| 23 | 3234-7 | 2 | Screw-HHF |
| 24 | 340-4 | 4 | Fitting-Straight |
| 24:1 | 237-30 | 1 | O-Ring |
| 24:2 | 237-79 | 1 | O-Ring |
| 25 | 340-132 | 1 | Fitting-Elbow, 90 DEG |
| 25:1 | 237-78 | 1 | O-Ring |
| 25:2 | 237-21 | 1 | O-Ring |
| 26 | 115-9148 | 1 | Fitting-Elbow-90 |

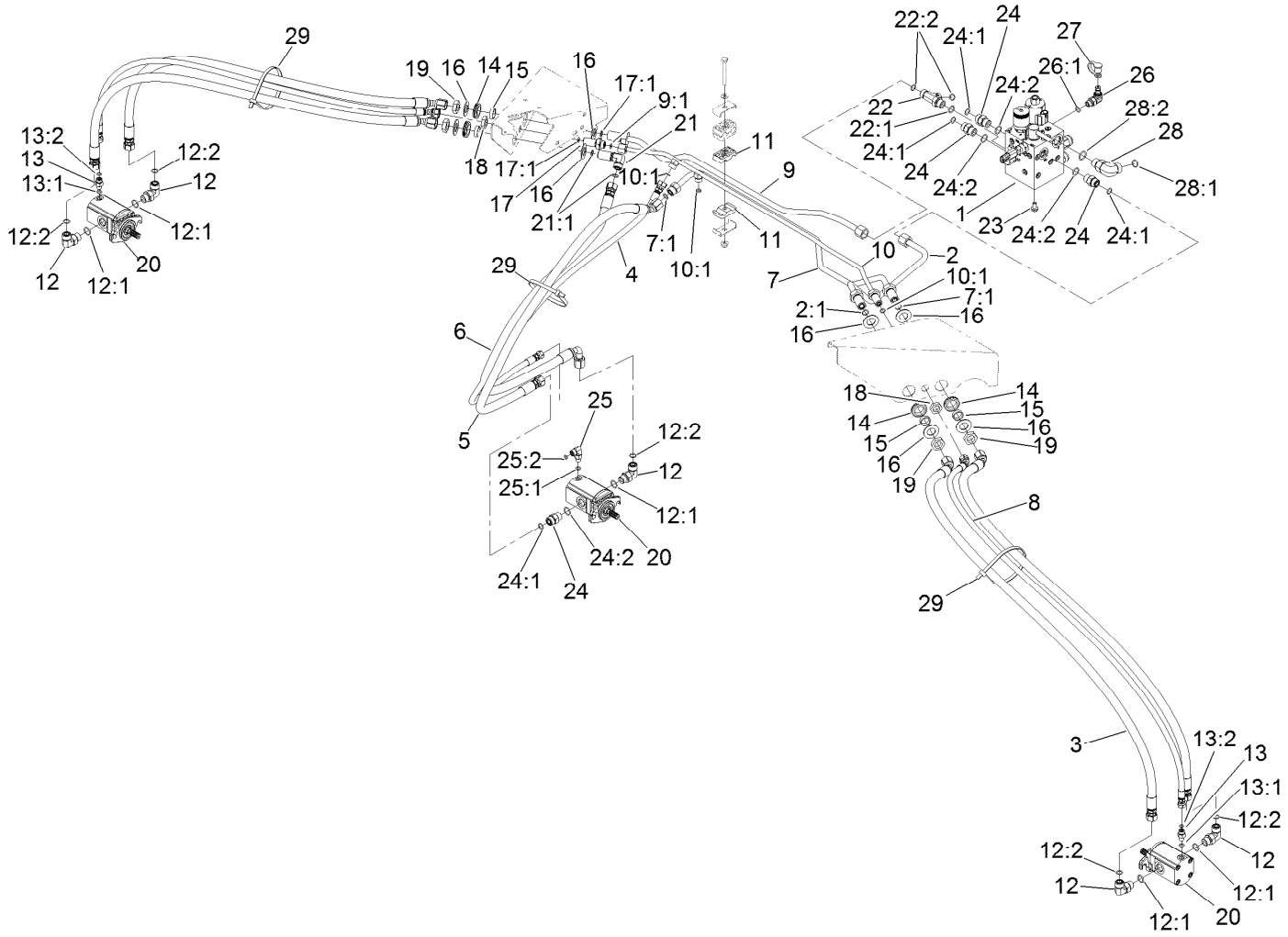


# Cutting Unit No. 1, 4 and 5 Hydraulic Assembly (continued)

| Ref. | Part Number | Qty. | Description |
|---|---|---|---|
| 26:1 | 237-42 | 1 | O-Ring |
| 27 | 354-79 | 1 | Cap-Dust |
| 28 | 340-17 | 1 | Fitting-Elbow, 90 DEG |
| 28:1 | 237-65 | 1 | O-Ring |
| 28:2 | 237-80 | 1 | O-Ring |
| 29 | 3334-945 | 3 | Tie-Cable |

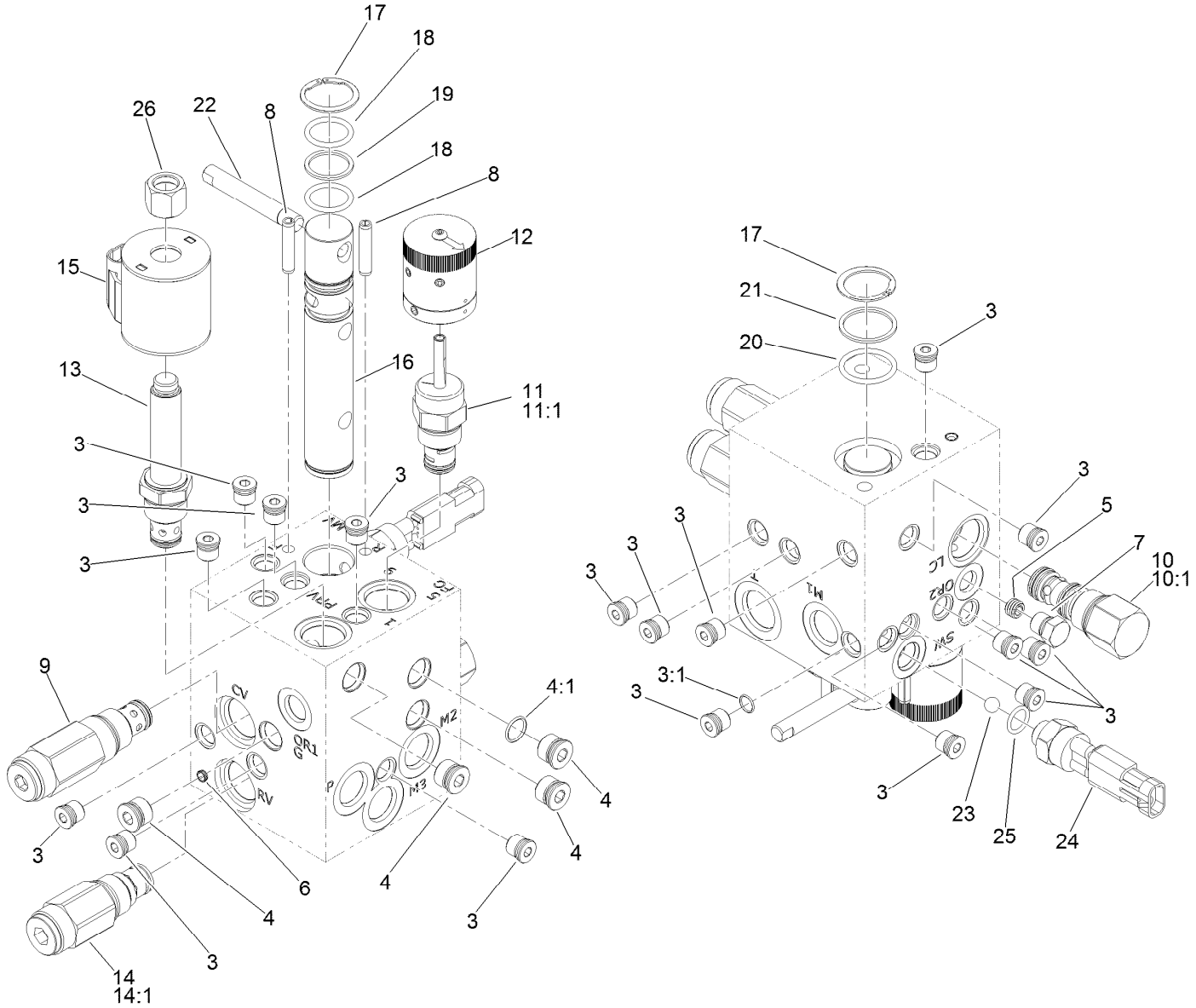


# Mow Manifold Assembly No. 139-6025

| Ref. | Part Number | Qty. | Description |
|---|---|---|---|
| 3 | 353-990 | 17 | Plug ASM |
| 3:1 | 237-78 | 1 | O-Ring |
| 4 | 353-989 | 4 | Plug-Hex, Hollow |
| 4:1 | 237-42 | 1 | O-Ring |
| 5 | 110-8987 | 1 | Plug-Orifice (0.015 Rw) |
| 6 | 110-0495 | 1 | Plug-Orifice (0.050 Inch) |
| 7 | 117-0115 | 1 | Plug |
| 8 | 112-6531 | 2 | Pin-Spring |
| 9 | 132-4912 | 1 | Valve-Check |
| 10 | 121-7880 | 1 | Spool-Logic |
| 10:1 | 119-2159 | 1 | Seal Kit ● |
| 11 | 110-8769 | 1 | Valve-Control, Manual Flow |
| 11:1 | 110-2633 | 1 | Seal Kit |
| 12 | 110-8767 | 1 | Rotary Handle ASM |
| 13 | 110-8799 | 1 | Valve-Relief, Proportional |
| 13:1 | 110-6316 | 1 | Seal Kit ● |
| 13:2 | 130-8180 | 1 | Nut-Coil (9/16-24 Unef-2B) ● |
| 14 | 121-7883 | 1 | Valve-Relief, 2000 PSI |
| 14:1 | 110-6316 | 1 | Seal Kit ● |
| 15 | 110-6344 | 1 | Coil-12V, DC |
| 16 | 120-1652 | 1 | Spool-Backlap |
| 17 | 120-1653 | 2 | Ring-Retaining, External |
| 18 | 120-1657 | 2 | O-Ring |
| 19 | 120-1656 | 1 | Ring-Backup |
| 20 | 120-1655 | 1 | O-Ring |
| 21 | 120-1654 | 1 | Ring-Backup |
| 22 | 120-1651 | 1 | Handle-Spool |
| 23 | 117-4605 | 1 | Ball-SS |
| 24 | 72-4320 | 1 | Switch-Ball |
| 25 | 110-8757 | 1 | O-Ring |
| 26 | 130-8180 | 1 | Nut-Coil (9/16-24 Unef-2B) |

● Not illustrated

# Rear Mow Hydraulic Circuit Assembly

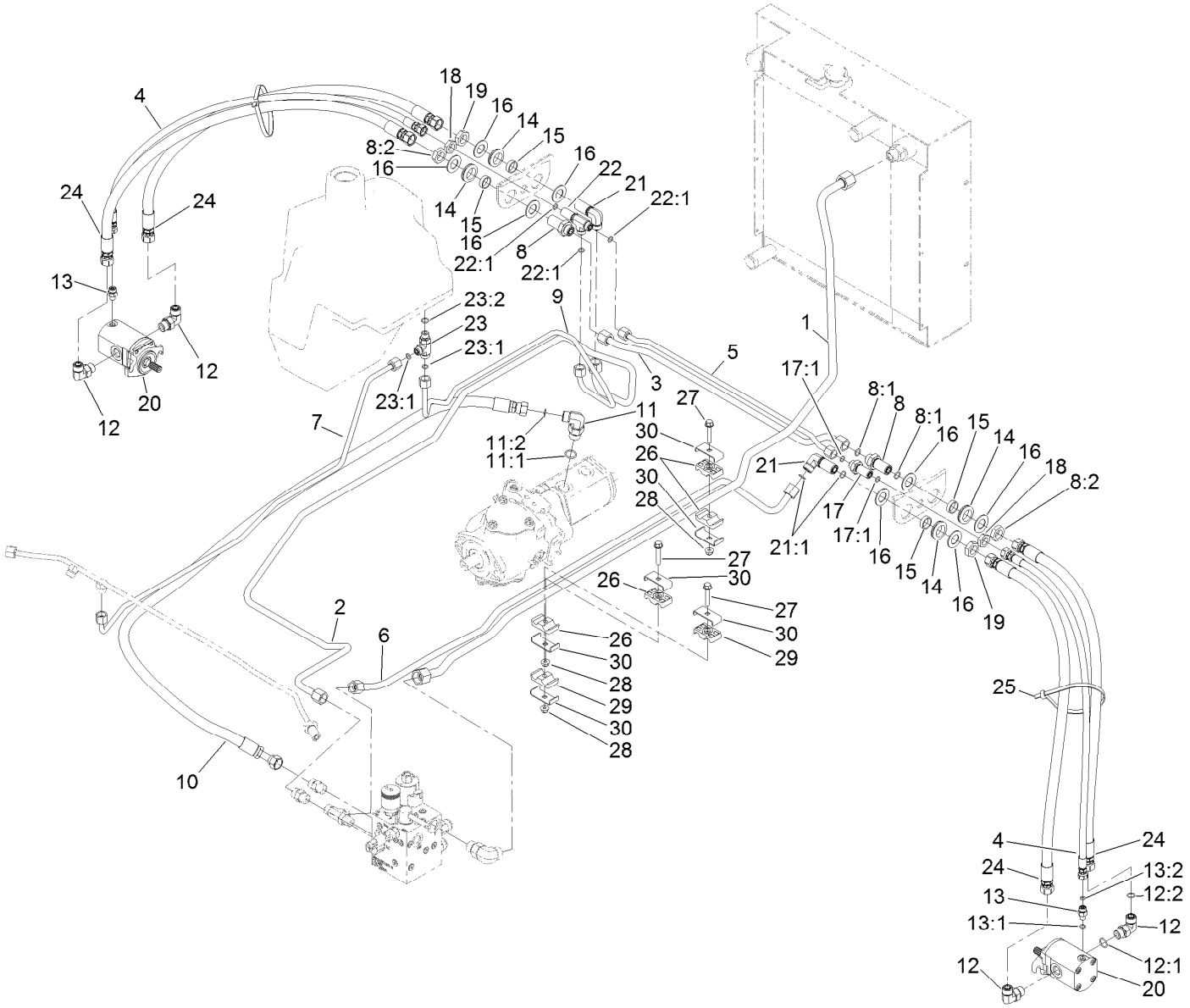

# Rear Mow Hydraulic Circuit Assembly (continued)

| Ref. | Part Number | Qty. | Description |
|---|---|---|---|
| 1 | 127-8512 | 1 | Tube-HYD |
| 2 | 127-8508 | 1 | Tube-HYD |
| 3 | 120-2173 | 1 | Tube-HYD |
| 4 | 139-5983 | 2 | Hose-HYD |
| 5 | 120-2174 | 1 | Tube-HYD |
| 6 | 127-8510 | 1 | Tube-HYD |
| 7 | 121-7843 | 1 | Tube-HYD |
| 8 | 340-161 | 2 | Fitting-Bulkhead |
| 8:1 | 237-30 | 2 | O-Ring |
| 8:2 | 340-127 | 1 | Nut-Bulkhead |
| 9 | 120-2180 | 1 | Tube-HYD |
| 10 | 121-7812 | 1 | Hose-HYD |
| 11 | 340-105 | 1 | Fitting-Elbow, 90 DEG |
| 11:1 | 237-80 | 1 | O-Ring |
| 11:2 | 237-30 | 1 | O-Ring |
| 12 | 340-98 | 4 | Fitting-Elbow, 90 DEG |
| 12:1 | 237-79 | 1 | O-Ring |
| 12:2 | 237-30 | 1 | O-Ring |
| 13 | 340-92 | 2 | Fitting-Straight |
| 13:1 | 237-78 | 1 | O-Ring |
| 13:2 | 237-21 | 1 | O-Ring |
| 14 | 240-5 | 4 | Grommet |

| Ref. | Part Number | Qty. | Description |
|---|---|---|---|
| 15 | 69-8960 | 4 | Spacer |
| 16 | 69-8930 | 8 | Washer |
| 17 | 340-71 | 1 | Fitting-Straight, Bulkhead |
| 17:1 | 237-22 | 2 | O-Ring |
| 18 | 340-70 | 2 | Nut-Lock |
| 19 | 340-127 | 2 | Nut-Bulkhead |
| 20 | 120-2072 | 2 | HYD Motor ASM |
| 21 | 93-9151 | 2 | Fitting-HYD |
| 21:1 | 237-30 | 2 | O-Ring |
| 22 | 340-68 | 1 | Fitting-Tee, Bulkhead |
| 22:1 | 237-22 | 3 | O-Ring |
| 23 | 340-86 | 1 | Fitting-Tee |
| 23:1 | 237-22 | 2 | O-Ring |
| 23:2 | 237-42 | 1 | O-Ring |
| 24 | 95-8824 | 4 | Hose ASM |
| 25 | 3334-945 | 2 | Tie-Cable |
| 26 | 56-7977 | 6 | Clamp-Tube |
| 27 | 94-5780 | 5 | Screw-HWH |
| 28 | 104-8300 | 5 | Nut-HF, NI |
| 29 | 56-7971 | 4 | Clamp-Tube |
| 30 | 119-1419 | 10 | Plate-Clamp |

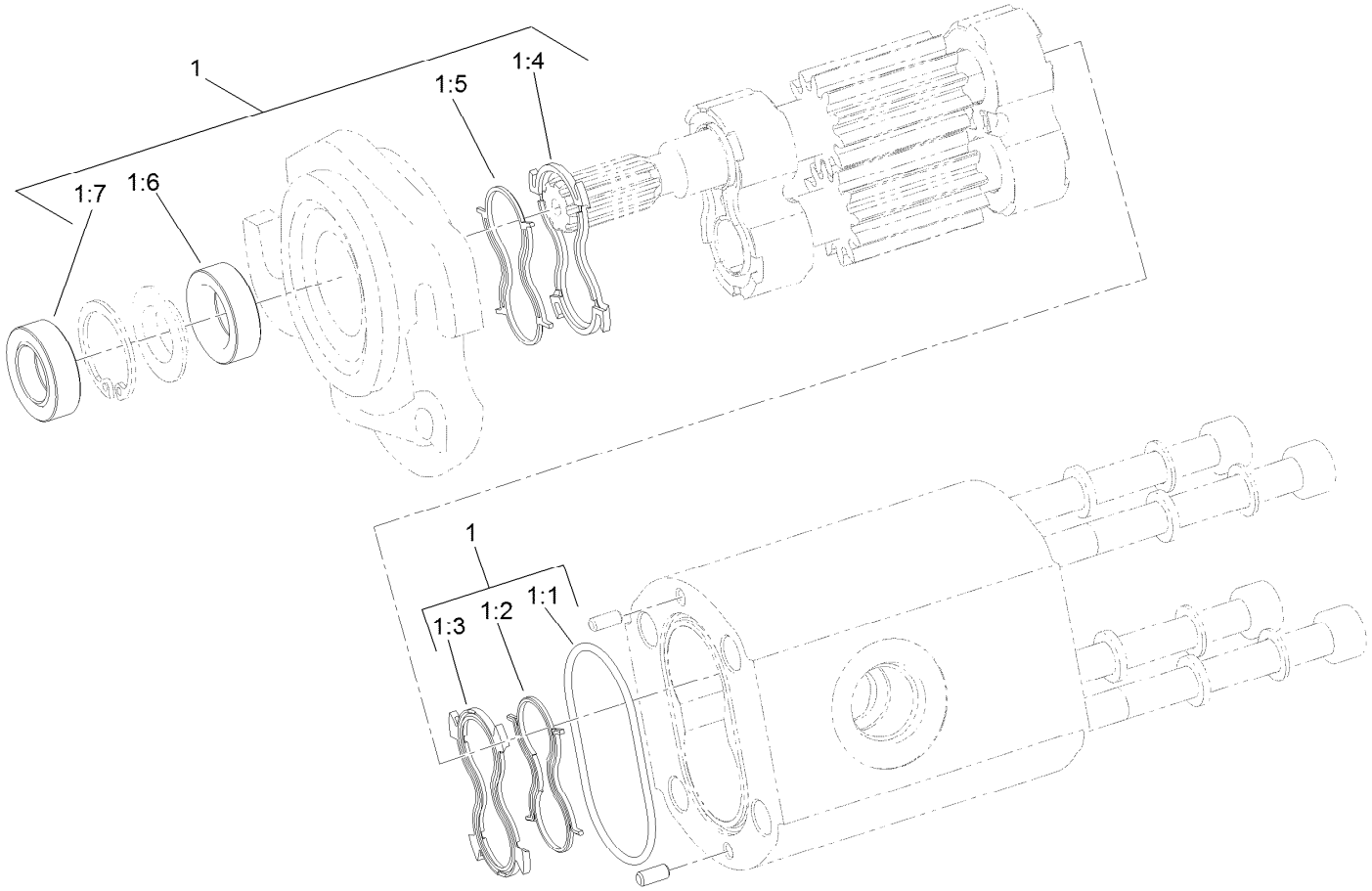


# Hydraulic Reel Motor Assembly No. 120-2072

| *Ref.* | *Part Number* | *Qty.* | *Description* |
|---|---|---|---|
| 1 | 119-7113 | 1 | Seal Kit |
| 1:1 | | 1 | O-Ring Housing ● |
| 1:2 | | 1 | Seal-Anti Extrusion ● |
| 1:3 | | 1 | Seal-Plate, Balancing ● |
| 1:4 | | 1 | Seal-Plate, Balancing ● |
| 1:5 | | 1 | Seal-Anti Extrusion ● |
| 1:6 | | 1 | Seal-Shaft (Inboard) ● |
| 1:7 | | 1 | Seal-Shaft (Outboard) ● |

● Not serviced separately

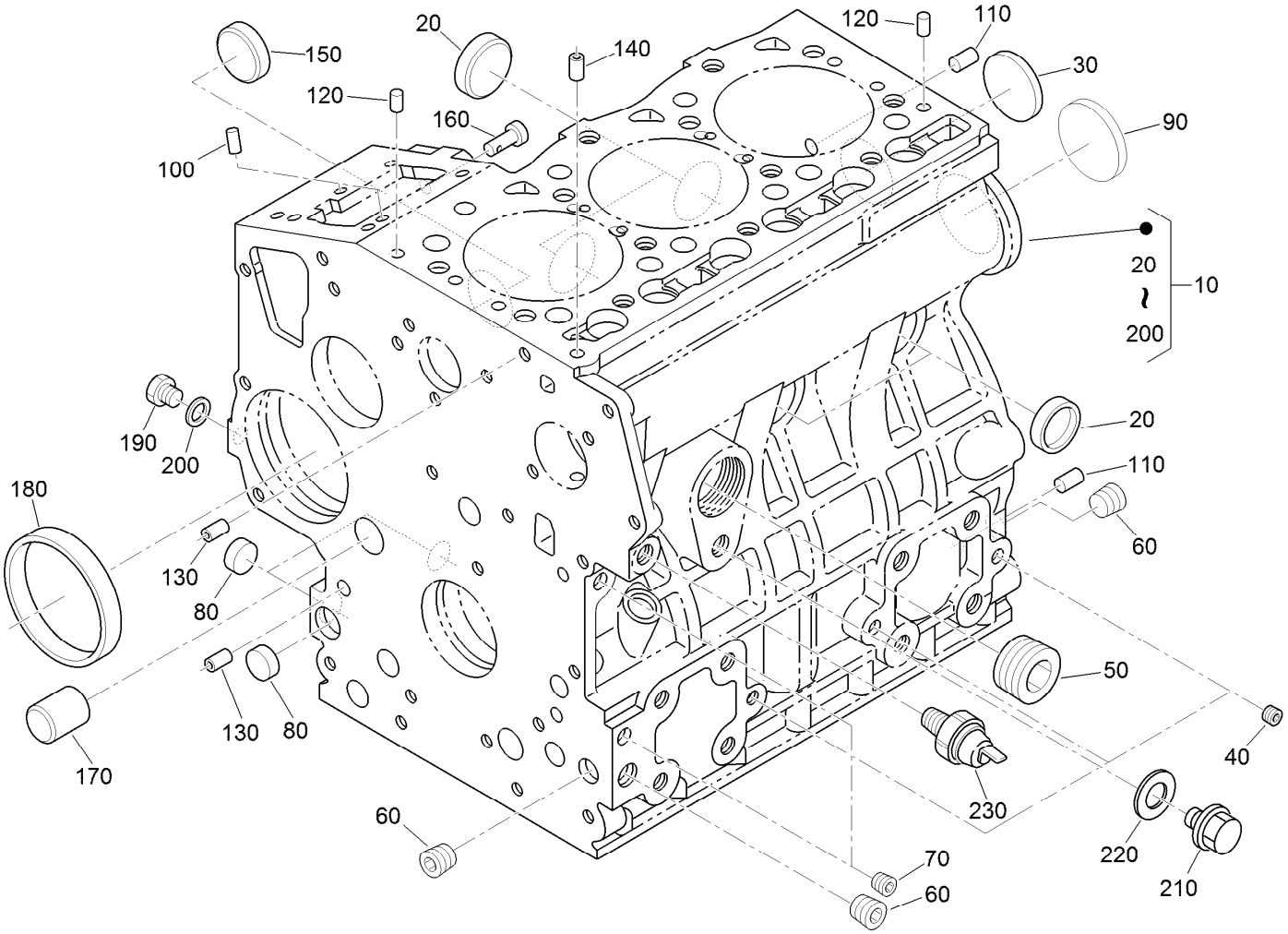


# Crankcase Assembly

| Ref. | Part Number | Qty. | Description |
|---|---|---|---|
| 10 | 115-3443 | 1 | Crankcase ASM |
| 20 | 98-9398 | 4 | Cap-Sealing |
| 30 | 98-7539 | 1 | Cap-Sealing |
| 40 | 98-9687 | 3 | Plug |
| 50 | 105-3779 | 1 | Plug |
| 60 | 98-9597 | 3 | Plug |
| 70 | 98-7487 | 2 | Plug |
| 80 | 98-9379 | 3 | Plug-Expansion |
| 90 | 98-9668 | 1 | Plug-Expansion |
| 100 | 98-9375 | 2 | Pin-Straight |
| 110 | 98-9377 | 2 | Pin-Straight |
| 120 | 98-9376 | 2 | Pin-Straight |

| Ref. | Part Number | Qty. | Description |
|---|---|---|---|
| 130 | 98-9387 | 2 | Pin-Pipe |
| 140 | 98-9539 | 1 | Pin-Pipe |
| 150 | 98-9599 | 1 | Plug |
| 160 | 98-9630 | 1 | Pin-Spring, Start |
| 170 | 98-9675 | 1 | Plug |
| 180 | 98-9656 | 1 | Bushing-Governor, Gear |
| 190 | 120-2559 | 1 | Plug |
| 200 | 98-7428 | 1 | Gasket |
| 210 | 99-3447 | 1 | Plug |
| 220 | 106-7056 | 1 | Gasket |
| 230 | 98-9416 | 1 | Switch-Oil |

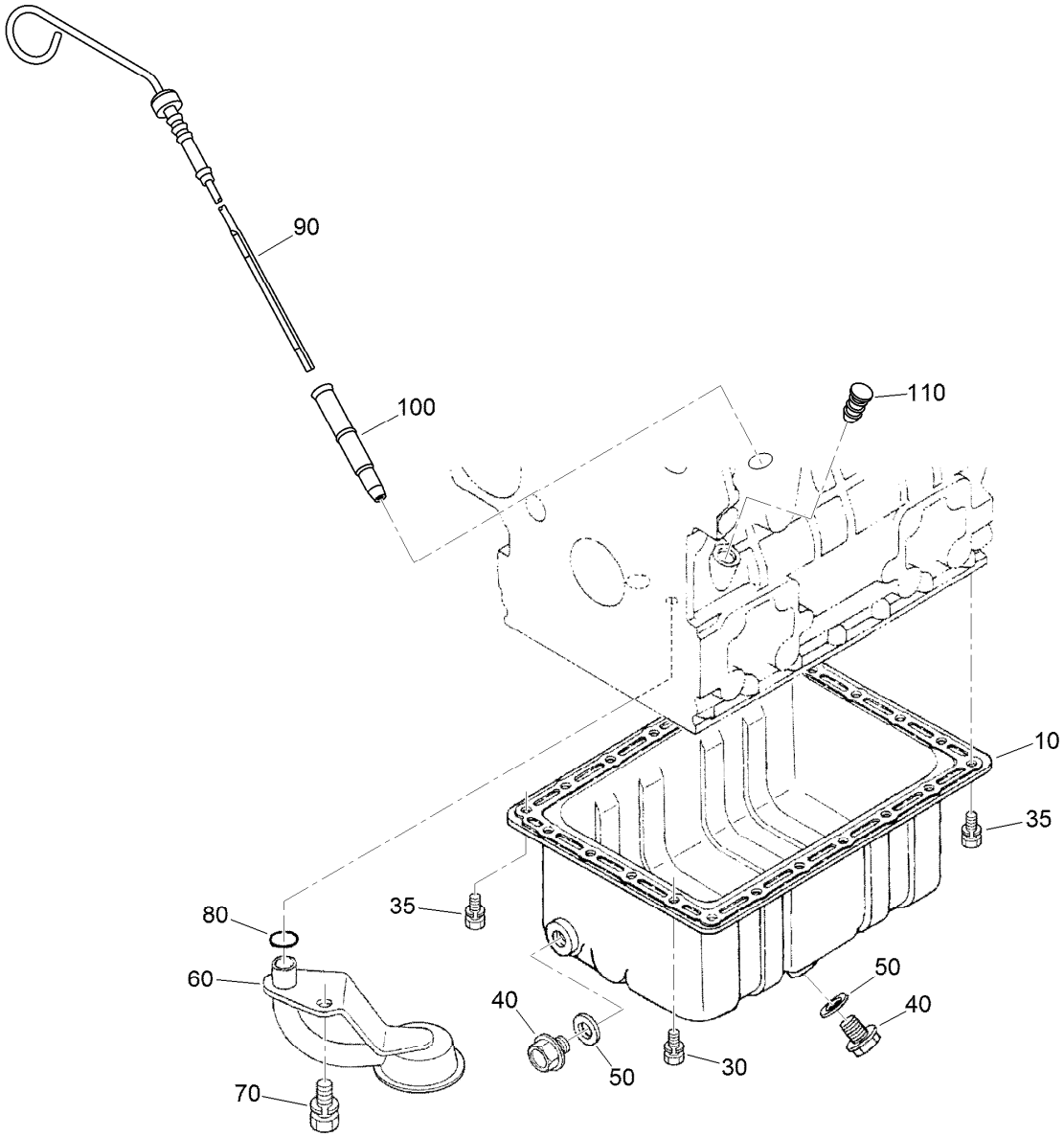


# Oil Pan and Dipstick Assembly

| *Ref.* | *Part Number* | *Qty.* | *Description* |
|---|---|---|---|
| 10 | 98-9685 | 1 | Pan-Oil |
| 30 | 98-9351 | 20 | Bolt |
| 35 | 98-9351 | 2 | Bolt |
| 40 | 114-8151 | 2 | Plug-Drain |
| 50 | 98-7524 | 2 | Gasket |
| 60 | 108-1401 | 1 | Base-Filter |
| 70 | 98-7526 | 1 | Bolt |
| 80 | 105-3776 | 1 | O-Ring |
| 90 | 104-9348 | 1 | Gauge-Oil |
| 100 | 105-4580 | 1 | Guide-Gauge, Oil |
| 110 | 110-3720 | 1 | Plug-Gauge, Oil |

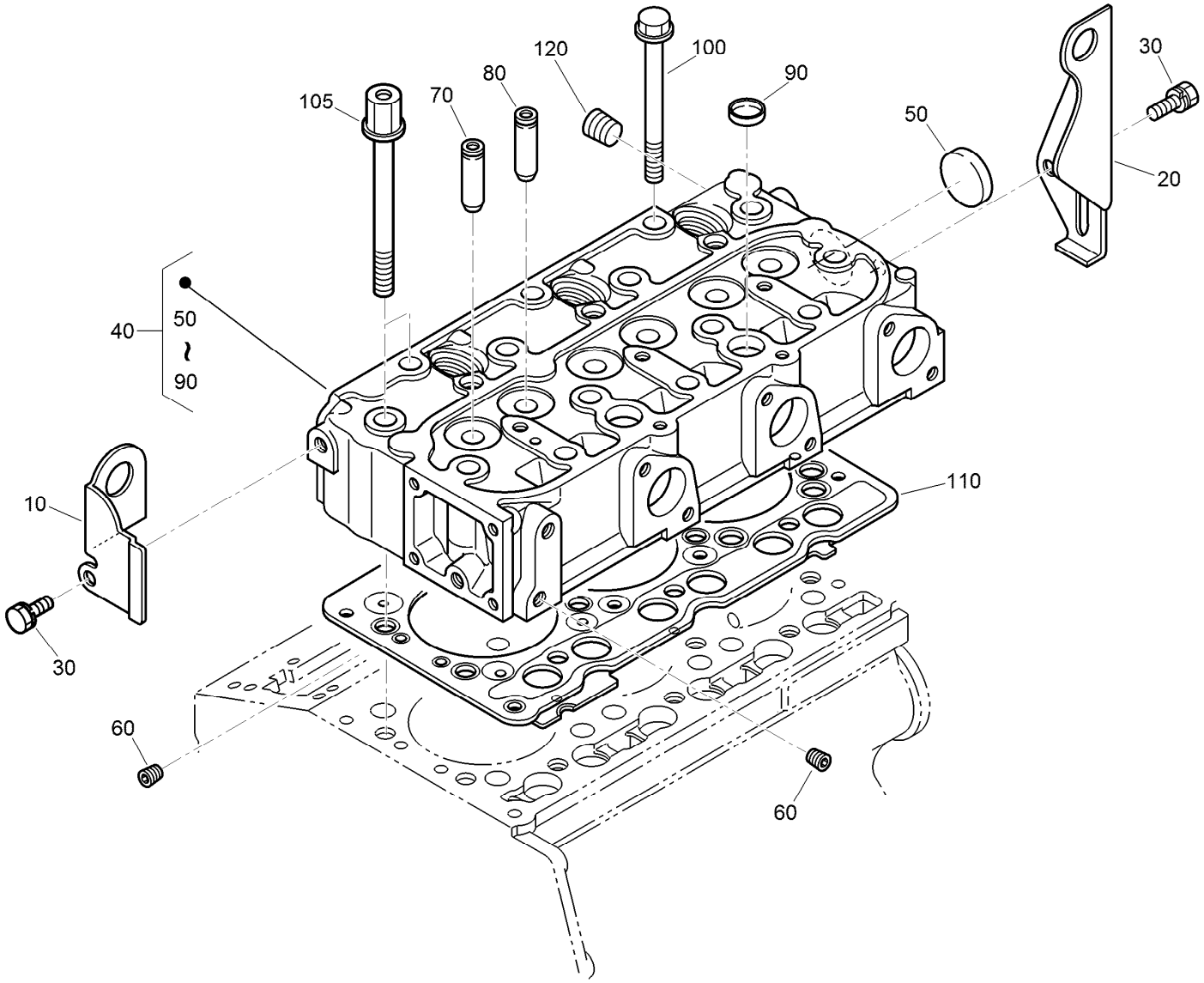


# Cylinder Head Assembly

| Ref. | Part Number | Qty. | Description |
|---|---|---|---|
| 10 | 130-1231 | 1 | Hook-Engine |
| 20 | 98-9478 | 1 | Hook-Engine |
| 30 | 100-9195 | 2 | Bolt |
| 40 | 130-1544 | 1 | Cylinder Head ASM |
| 50 | 105-3705 | 1 | Cap-Sealing |
| 60 | 98-9687 | 2 | Plug |
| 70 | 107-9066 | 3 | Guide-Valve, Inlet |
| 80 | 107-9067 | 3 | Guide-Valve, Exhaust |
| 90 | 98-9389 | 2 | Cap-Sealing |
| 100 | 98-9479 | 12 | Bolt-Head, Cylinder |
| 105 | 98-9647 | 2 | Bolt-Head, Cylinder |
| 110 | 108-6573 | 1 | Gasket-Head, Cylinder |
| 120 | 98-9444 | 1 | Plug |

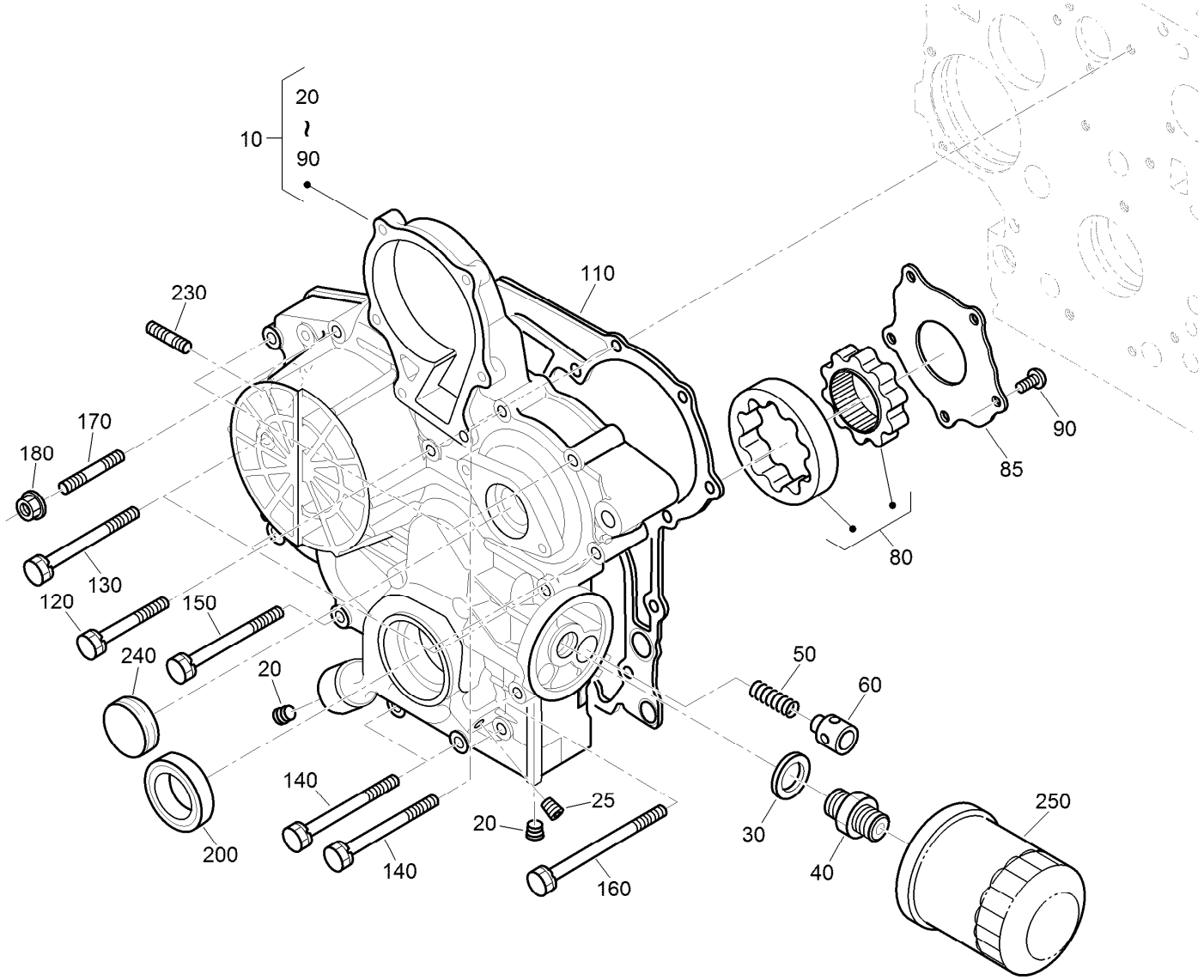


# Gear Case and Oil Filter Cartridge Assembly

| Ref. | Part Number | Qty. | Description |
|---|---|---|---|
| 10 | 115-4105 | 1 | Gear Case ASM |
| 20 | 127-0425 | 2 | Plug |
| 25 | 98-7487 | 1 | Plug |
| 30 | 98-7562 | 1 | Washer-Plain |
| 40 | 98-9388 | 1 | Joint-Pipe |
| 50 | 130-1511 | 1 | Spring |
| 60 | 130-1510 | 1 | Valve-Relief |
| 80 | 130-1508 | 1 | Rotor ASM |
| 85 | 130-1509 | 1 | Cover-Pump, Oil |
| 90 | 130-1164 | 5 | Screw-Binding |
| 110 | 98-9633 | 1 | Gasket-Case, Gear |

| Ref. | Part Number | Qty. | Description |
|---|---|---|---|
| 120 | 100-1765 | 3 | Bolt |
| 130 | 125-9063 | 4 | Bolt-Sems |
| 140 | 98-9356 | 4 | Bolt |
| 150 | 107-9074 | 1 | Bolt |
| 160 | 99-3510 | 1 | Bolt |
| 170 | 105-3709 | 1 | Stud |
| 180 | 100-2203 | 1 | Nut-Flange |
| 200 | 119-8038 | 1 | Seal-Oil |
| 230 | 105-3710 | 2 | Stud |
| 240 | 99-3515 | 1 | Plug-Gearcase |
| 250 | 108-3841 | 1 | Filter-Oil |

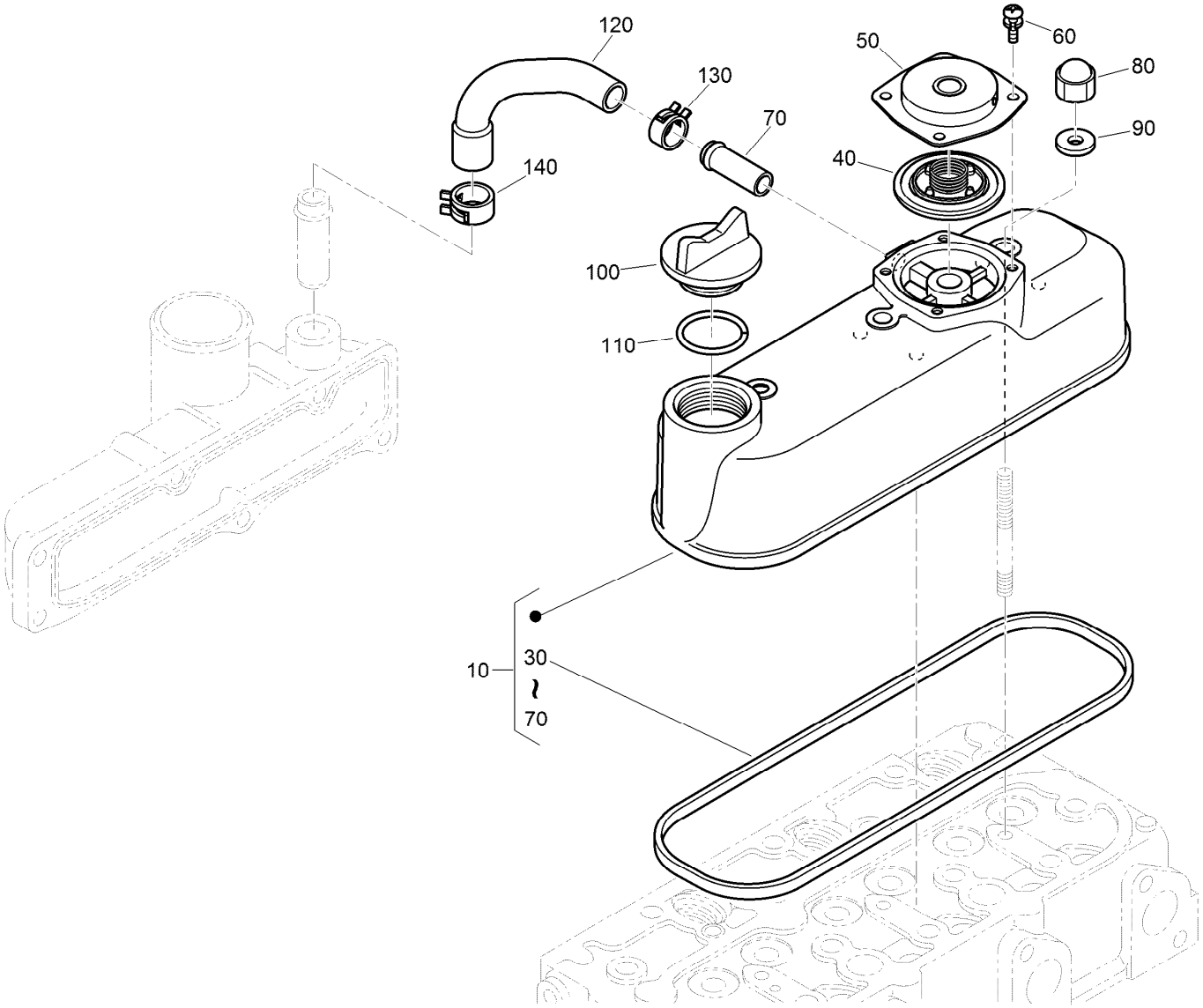


# Cylinder Head Cover Assembly

| *Ref.* | *Part Number* | *Qty.* | *Description* |
|---|---|---|---|
| 10 | 115-3446 | 1 | Cylinder Head Cover ASM |
| 30 | 98-9615 | 1 | Gasket-Cover, Head |
| 40 | 110-3715 | 1 | Valve-Breather |
| 50 | 110-3714 | 1 | Cover-Breather |
| 60 | 98-9364 | 4 | Screw (With Washer) |
| 70 | 98-7766 | 1 | Pipe-Return, Water |
| 80 | 98-9455 | 3 | Nut-Cap |
| 90 | 98-9454 | 3 | Gasket |
| 100 | 107-9075 | 1 | Plug-Filler, Oil |
| 110 | 99-3446 | 1 | O-Ring |
| 120 | 107-7836 | 1 | Tube-Breather |
| 130 | 108-2859 | 1 | Clamp-Hose |
| 140 | 108-2860 | 1 | Clamp-Hose |

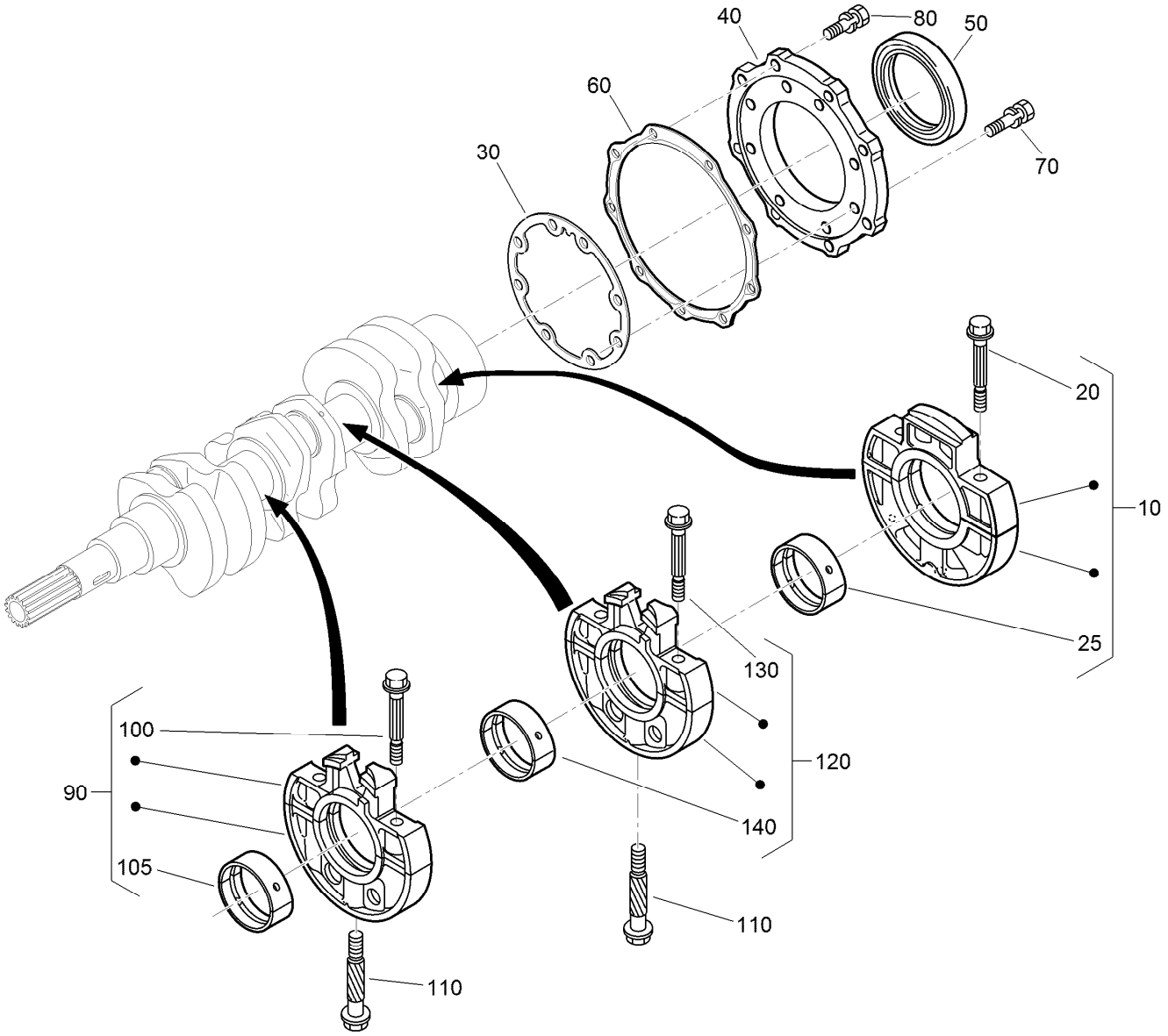


# Main Bearing Case Assembly

| Ref. | Part Number | Qty. | Description |
|---|---|---|---|
| 10 | 112-7026 | 1 | Wheel Bearing Case ASM |
| 20 | 98-9484 | 2 | Bolt-Case, Bearing |
| 25 | 115-4121 | 1 | Metal-Crankshaft (STD) |
| 25 | 112-7039 | 1 | Metal-Crankshaft (0.2Mm) |
| 25 | 112-7040 | 1 | Metal-Crankshaft (-0.4Mm) |
| 30 | 131-6554 | 1 | Gasket-Case, Bearing |
| 40 | 112-7046 | 1 | Cover-Case, Bearing |
| 50 | 112-0180 | 1 | Seal-Oil |
| 60 | 112-7037 | 1 | Gasket-Cover, Case |
| 70 | 127-0441 | 8 | Bolt |
| 80 | 127-0442 | 9 | Bolt |

| Ref. | Part Number | Qty. | Description |
|---|---|---|---|
| 90 | 115-4106 | 1 | Main Bearing Case ASM |
| 100 | 98-9484 | 2 | Bolt-Case, Bearing |
| 105 | 98-9524 | 1 | Metal-Crankshaft (STD Set) |
| 105 | 127-0433 | 1 | Metal-Crankshaft (-0.2MM) |
| 105 | 98-9531 | 1 | Bearing-Main (0.4MM) |
| 110 | 98-9485 | 2 | Bolt-Case, Bearing |
| 120 | 115-4107 | 1 | Main Bearing Case ASM |
| 130 | 98-9484 | 2 | Bolt-Case, Bearing |
| 140 | 98-9524 | 1 | Metal-Crankshaft (STD Set) |
| 140 | 127-0433 | 1 | Metal-Crankshaft (-0.2MM) |
| 140 | 98-9531 | 1 | Bearing-Main (0.4MM) |

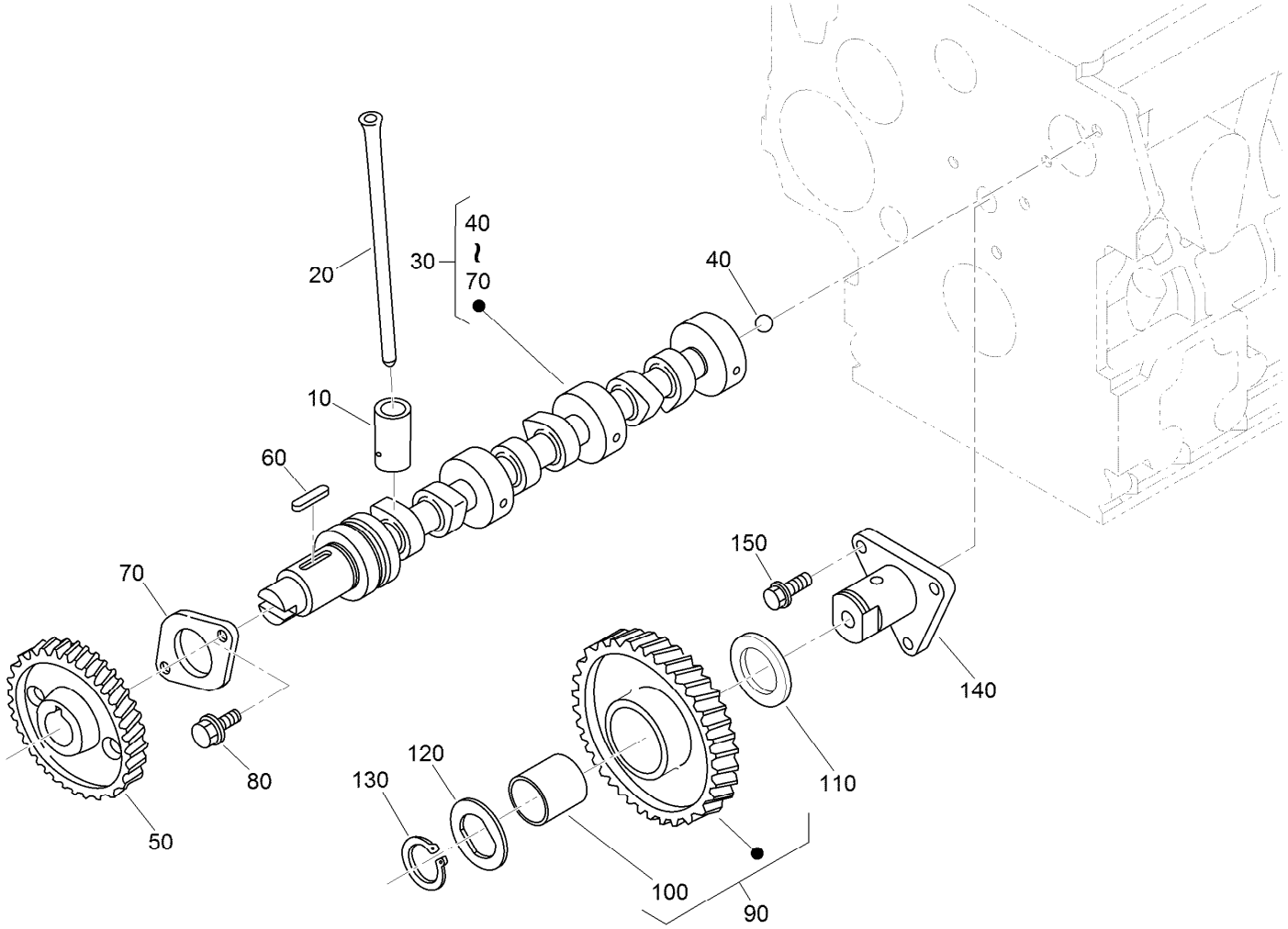


# Camshaft and Idle Gear Shaft Assembly

| Ref. | Part Number | Qty. | Description |
|---|---|---|---|
| 10 | 112-0185 | 6 | Tappet |
| 20 | 127-0421 | 6 | Rod-Push |
| 30 | 130-1545 | 1 | Camshaft ASM |
| 40 | 110-3729 | 1 | Ball |
| 50 | 98-9512 | 1 | Gear-Cam |
| 60 | 98-9378 | 1 | Key-Feather |
| 70 | 98-9510 | 1 | Stopper-Camshaft |
| 80 | 98-7692 | 2 | Bolt |
| 90 | 117-7584 | 1 | Idler Gear ASM |
| 100 | 117-7585 | 1 | Bushing-Gear, Idle |
| 110 | 98-9535 | 1 | Collar-Gear, Idle |
| 120 | 98-9536 | 1 | Collar-Gear, Idle |
| 130 | 98-9534 | 1 | Circlip-Gear, Idle |
| 140 | 98-9533 | 1 | Shaft-Gear, Idle |
| 150 | 98-7692 | 3 | Bolt |

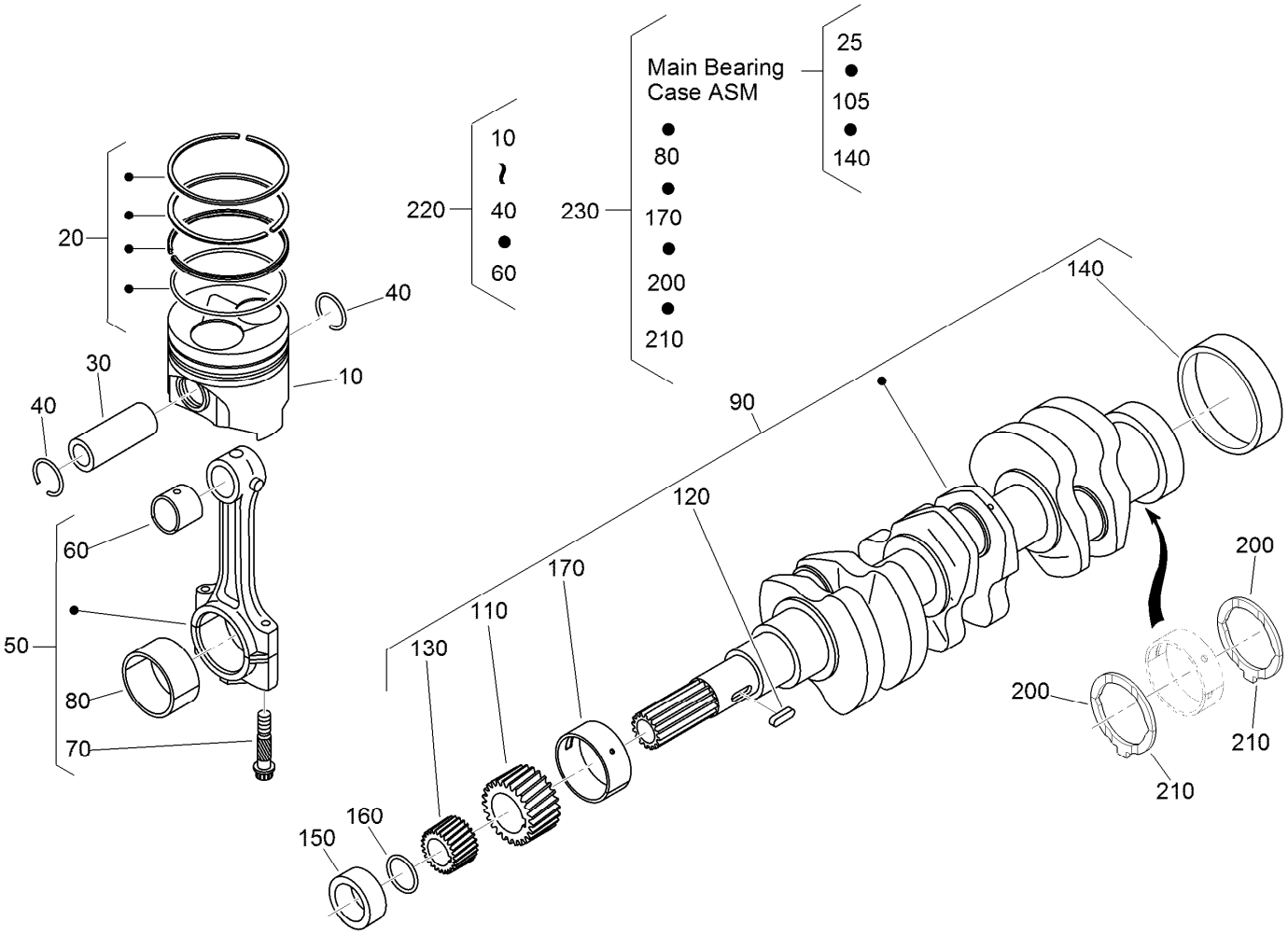


# Piston and Crankshaft Assembly

| Ref. | Part Number | Qty. | Description |
|---|---|---|---|
| 10 | 130-1546 | 3 | Piston (STD) |
| 10 | 130-1549 | 3 | Piston (+0.50MM) |
| 20 | 130-1506 | 3 | Piston Ring ASM (STD) |
| 20 | 130-1507 | 3 | Piston Ring ASM (+0.50MM) |
| 30 | 98-9513 | 3 | Pin-Piston |
| 40 | 98-9514 | 6 | Circlip-Pin, Piston |
| 50 | 117-7586 | 3 | Connecting Rod ASM |
| 60 | 115-3014 | 3 | Bushing-Pin, Piston |
| 70 | 98-9517 | 6 | Bolt-Rod, Connecting |
| 80 | 98-9553 | 3 | Bearing-Rod (STD) |
| 80 | 98-9519 | 3 | Bearing-Rod (-0.2MM) |
| 80 | 117-7588 | 3 | Metal-Crankpin (-0.4MM) |
| 90 | 130-1375 | 1 | Crankshaft ASM |
| 110 | 117-7561 | 1 | Gear-Crankshaft |
| 120 | 98-9666 | 1 | Key |
| 130 | 127-0445 | 1 | Gear-Drive, Oil Pump |
| 140 | 98-9522 | 1 | Sleeve-Crankshaft |
| 150 | 127-0444 | 1 | Collar-Crankshaft |

| Ref. | Part Number | Qty. | Description |
|---|---|---|---|
| 160 | 105-3783 | 1 | O-Ring |
| 170 | 112-7005 | 1 | Bearing-Main (STD) |
| 170 | 98-9528 | 1 | Bearing-Main (-0.2MM) |
| 170 | 127-0432 | 1 | Metal-Crankshaft (-0.4MM) |
| 200 | 98-9413 | 2 | Bearing-Thrust (STD) |
| 200 | 127-0416 | 2 | Metal-Side (+0.2Mm) |
| 200 | 127-0417 | 2 | Metal-Side (+0.40Mm) |
| 210 | 98-9688 | 2 | Bearing-Thrust (STD) |
| 210 | 127-0437 | 2 | Metal-Side (+0.2MM) |
| 210 | 127-0438 | 2 | Metal-Side (+0.40MM) |
| 220 | 130-1547 | 3 | Piston Kit |
| 220 | 130-1548 | 3 | Piston Kit |
| 230 | 130-1501 | 1 | Engine Metal Kit (STD) |
| 230 | 130-1498 | 1 | Engine Metal Kit (-0.20Mm/+0.20Mm) |
| 230 | 130-1499 | 1 | Engine Metal Kit (-0.40Mm/+0.40Mm) |

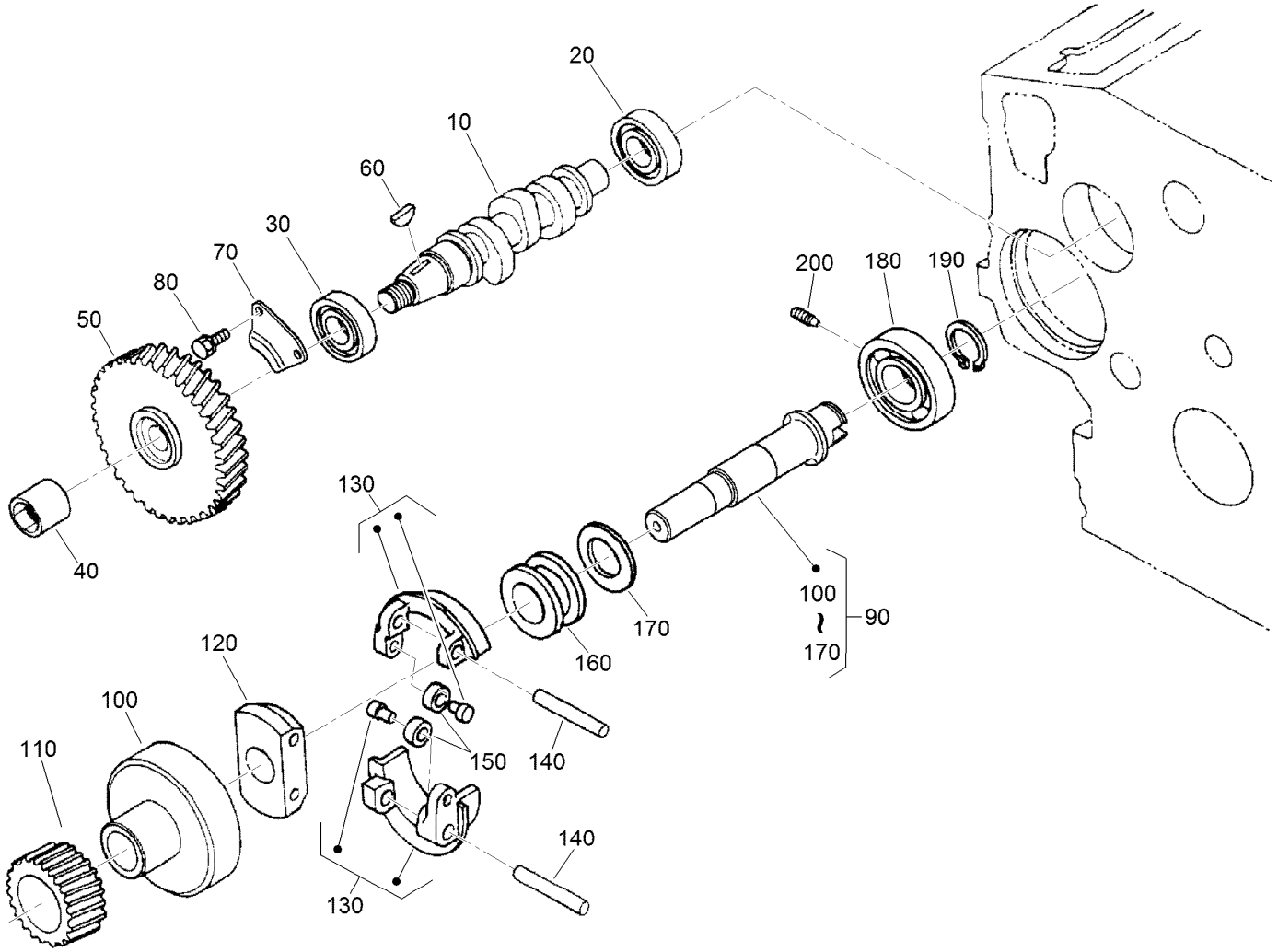


# Fuel Camshaft and Governor Shaft Assembly

| Ref. | Part Number | Qty. | Description |
|---|---|---|---|
| 10 | 98-9459 | 1 | Camshaft-Fuel |
| 20 | 107-9077 | 1 | Bearing-Ball |
| 30 | 107-9078 | 1 | Bearing-Ball |
| 40 | 130-1512 | 1 | Nut |
| 50 | 120-2562 | 1 | Gear-Pump, Injection |
| 60 | 98-9595 | 1 | Key-Woodruff |
| 70 | 98-9511 | 1 | Stopper-Fuel, Camshaft |
| 80 | 98-7692 | 2 | Bolt |
| 90 | 98-9644 | 1 | Governor Shaft ASM |
| 100 | 98-9562 | 1 | Holder-Gear, Governor |

| Ref. | Part Number | Qty. | Description |
|---|---|---|---|
| 110 | 98-9673 | 1 | Gear-Governor |
| 120 | 98-9561 | 1 | Holder-Weight, Governor |
| 130 | 130-1240 | 2 | Governor Weight ASM |
| 140 | 98-9560 | 2 | Shaft-Weight, Governor |
| 150 | 98-9692 | 2 | Roller |
| 160 | 98-9563 | 1 | Sleeve-Governor |
| 170 | 98-9564 | 1 | Washer-Thrust |
| 180 | 107-9079 | 1 | Bearing-Ball |
| 190 | 98-9657 | 1 | Circlip-Shaft, Governor |
| 200 | 98-9565 | 1 | Screw-Set |

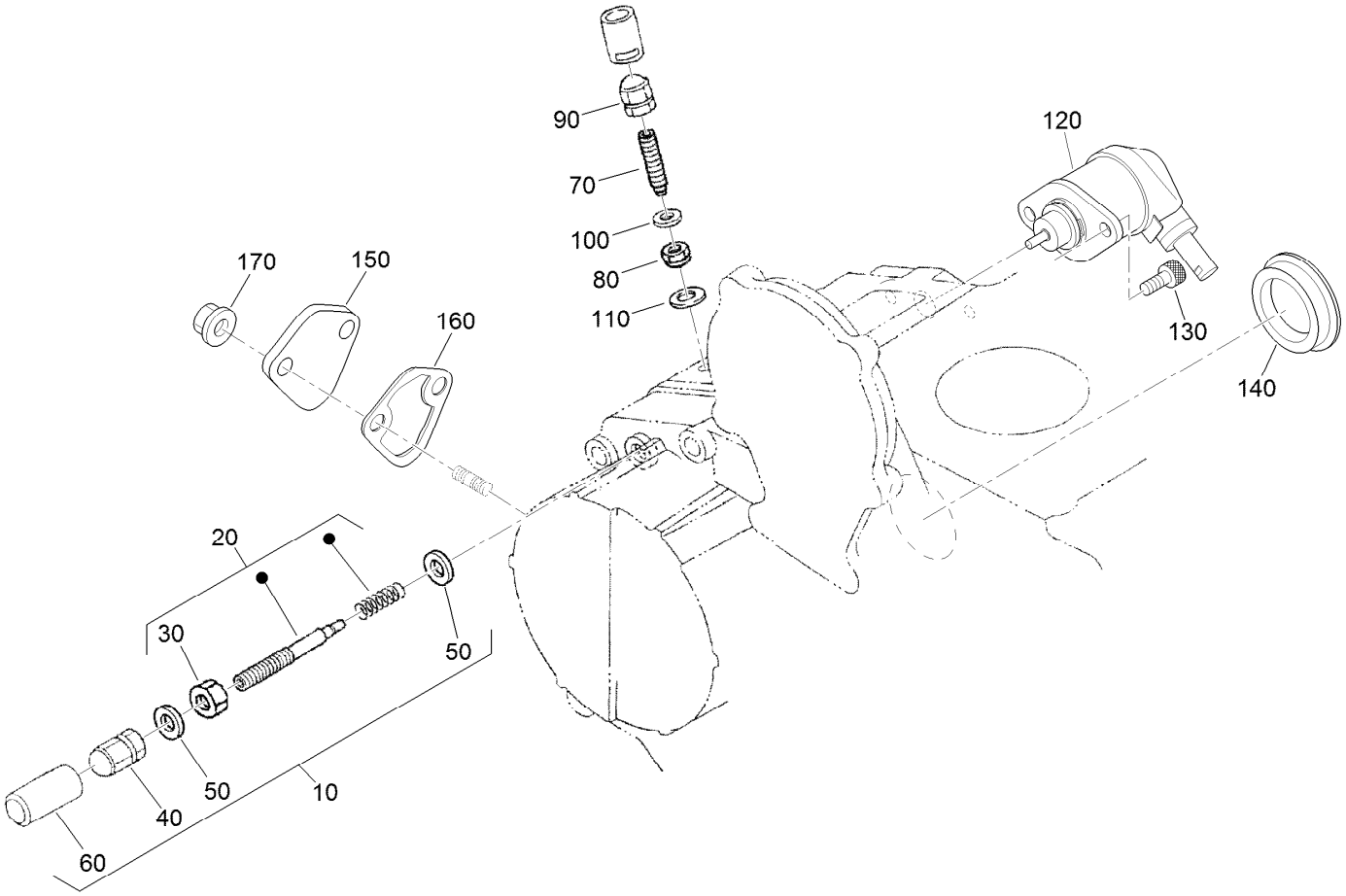


# Idle Apparatus and Stop Solenoid Assembly

| Ref. | Part Number | Qty. | Description |
|---|---|---|---|
| 10 | 98-9678 | 1 | Idle Apparatus ASM |
| 20 | 112-7014 | 1 | Adjusting Bolt ASM |
| 30 | 98-9439 | 1 | Nut |
| 40 | 112-0181 | 1 | Nut |
| 50 | 98-7654 | 2 | Gasket |
| 60 | 98-7656 | 1 | Cap |
| 70 | 112-7015 | 1 | Bolt-Adjusting |
| 80 | 100-2175 | 1 | Nut-Lock |
| 90 | 112-0181 | 1 | Nut |

| Ref. | Part Number | Qty. | Description |
|---|---|---|---|
| 100 | 98-7654 | 1 | Gasket |
| 110 | 107-9081 | 1 | Gasket |
| 120 | 104-5155 | 1 | Solenoid-Stop |
| 130 | 130-1155 | 2 | Screw-HSH |
| 140 | 112-7016 | 1 | Cover-Pump |
| 150 | 99-3514 | 1 | Cover |
| 160 | 117-7562 | 1 | Gasket-Pump, Fuel |
| 170 | 100-2203 | 2 | Nut-Flange |

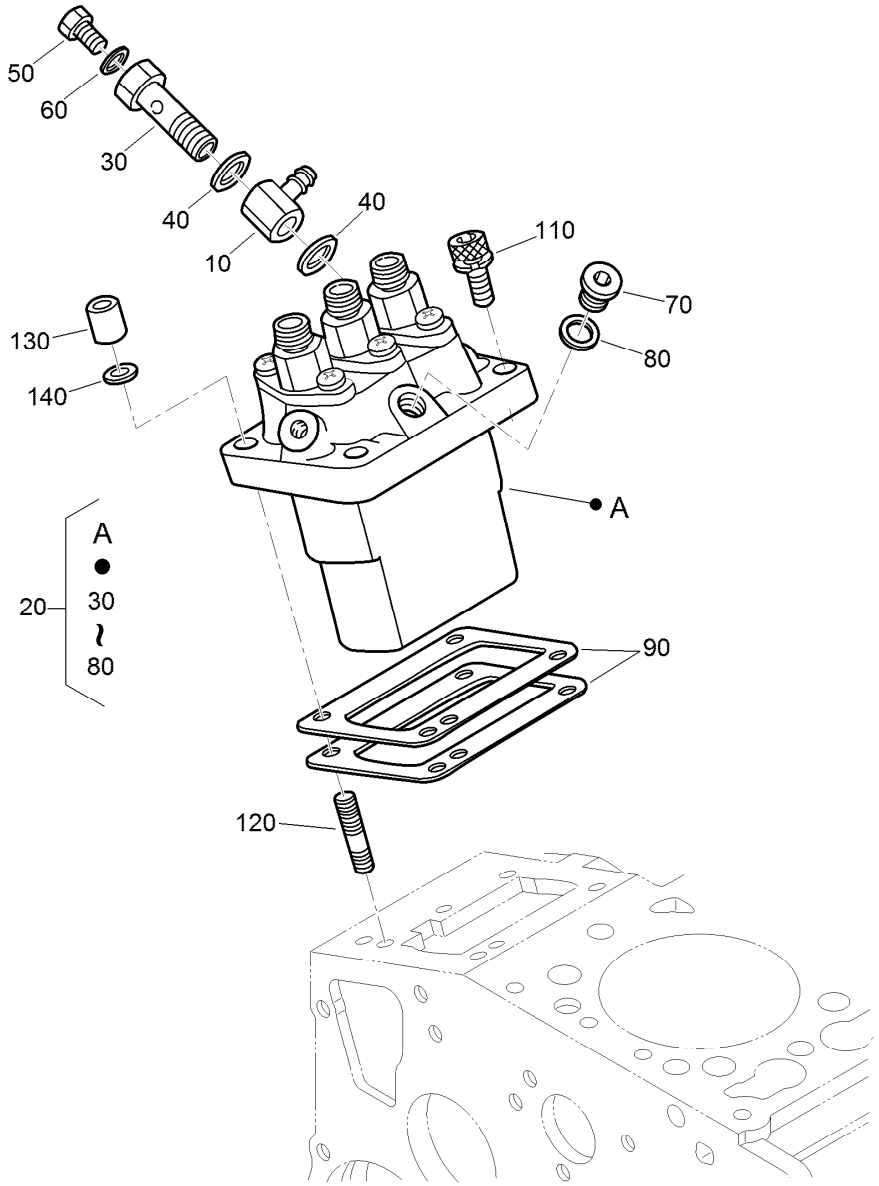


# Injection Pump Assembly

| Ref. | Part Number | Qty. | Description |
|---|---|---|---|
| 10 | 98-9596 | 1 | Joint-Eye |
| 20 | 98-9643 | 1 | Injection Pump ASM |
| 30 | 98-9464 | 1 | Bolt-Joint |
| 40 | 98-9445 | 2 | Gasket |
| 50 | 98-9430 | 1 | Screw |
| 60 | 98-9446 | 1 | Gasket |
| 70 | 98-9466 | 1 | Plug |
| 80 | 98-9451 | 1 | Gasket |
| 90 | 98-9456 | 1 | Shim-Injection (0.20MM) |

| Ref. | Part Number | Qty. | Description |
|---|---|---|---|
| 90 | 98-9457 | 1 | Shim-Injection (0.25MM) |
| 90 | 98-9458 | 1 | Shim-Injection (0.30MM) |
| 90 | 115-3046 | 1 | Shim-Injection (0.35MM) |
| 90 | 115-3045 | 1 | Shim-Injection (0.175MM) |
| 110 | 117-7564 | 2 | Bolt-Hex Soc HD |
| 120 | 98-9438 | 2 | Stud |
| 130 | 98-9440 | 2 | Nut-Cap |
| 140 | 98-7699 | 2 | Washer-Spring |

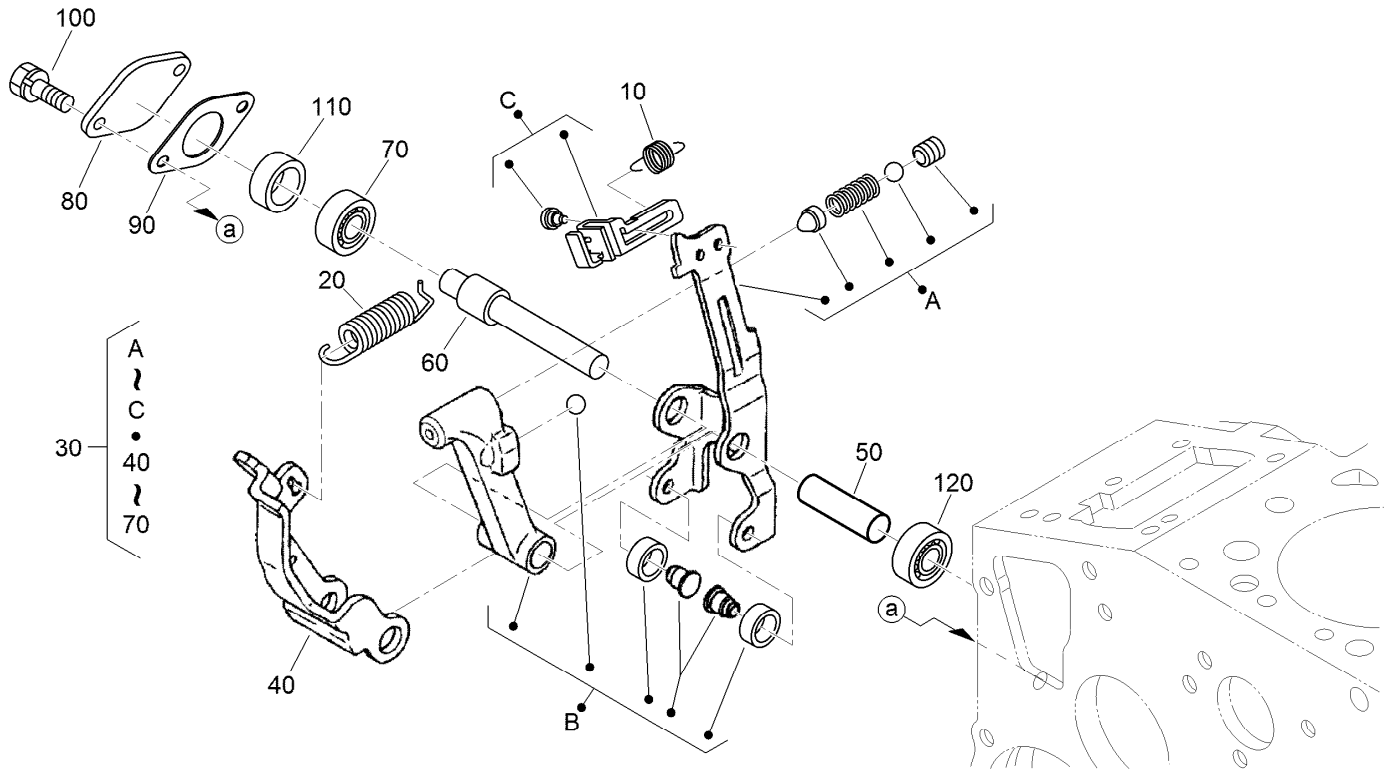


# Governor Assembly

| Ref. | Part Number | Qty. | Description |
|---|---|---|---|
| 10 | 105-3786 | 1 | Spring-Start |
| 20 | 98-9681 | 1 | Spring-Governor |
| 30 | 115-4502 | 1 | Fork Lever ASM |
| 40 | 107-9084 | 1 | Lever-Fork |
| 50 | 107-9085 | 1 | Shaft-Lever, Fork |
| 60 | 107-9086 | 1 | Shaft-Lever, Fork |
| 70 | 98-9570 | 1 | Bearing-Miniaturize |
| 80 | 115-4122 | 1 | Cover-Shaft, Fork Lever |
| 90 | 98-9682 | 1 | Gasket |
| 100 | 98-9350 | 2 | Bolt |
| 110 | 98-9567 | 1 | Collar |
| 120 | 98-9571 | 1 | Bearing-Miniaturize |

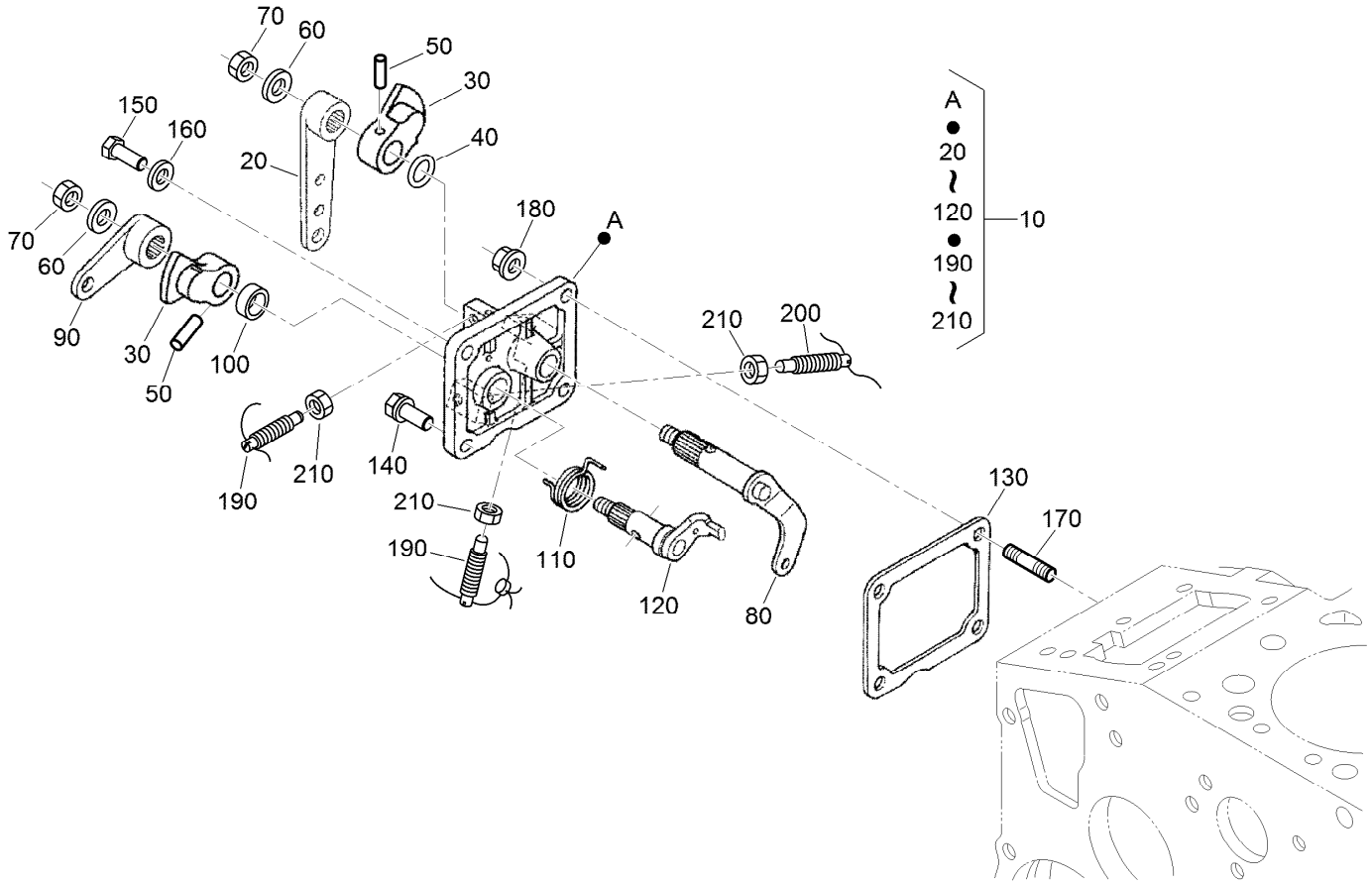


# Speed Control Plate Assembly

| Ref. | Part Number | Qty. | Description |
|---|---|---|---|
| 10 | 105-3735 | 1 | Control Plate ASM |
| 20 | 98-9662 | 1 | Lever-Control, Speed |
| 30 | 98-9572 | 2 | Lever-Control, Speed |
| 40 | 105-3788 | 1 | O-Ring |
| 50 | 98-7602 | 2 | Pin-Spring |
| 60 | 98-9594 | 2 | Washer-Plain |
| 70 | 98-9589 | 2 | Nut |
| 80 | 98-9658 | 1 | Governor Lever ASM |
| 90 | 98-9663 | 1 | Lever-Stop, Engine |
| 100 | 98-7601 | 1 | Seal-Oil |
| 110 | 98-9472 | 1 | Spring-Return |
| 120 | 98-9664 | 1 | Shaft-Lever, Stop |
| 130 | 98-9637 | 1 | Gasket |
| 140 | 98-7692 | 1 | Bolt |
| 150 | 127-0401 | 1 | Bolt-Hex |
| 160 | 98-7654 | 1 | Gasket |
| 170 | 105-3710 | 2 | Stud |
| 180 | 100-2203 | 2 | Nut-Flange |
| 190 | 117-7565 | 2 | Bolt-Adjusting |
| 200 | 117-7566 | 1 | Bolt-Adjusting |
| 210 | 98-7572 | 3 | Nut |

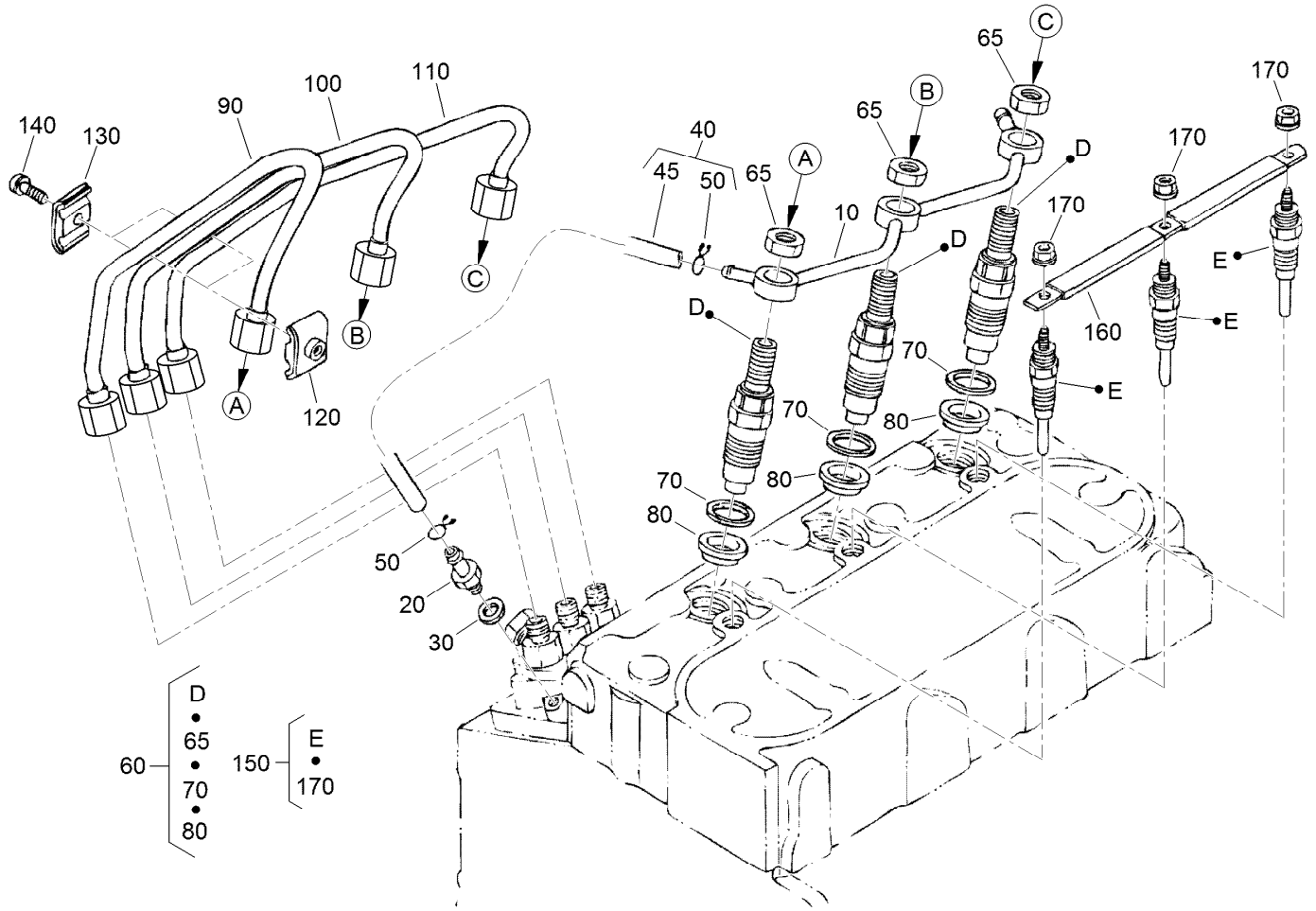


# Nozzle Holder and Glow Plug Assembly

| Ref. | Part Number | Qty. | Description |
|---|---|---|---|
| 10 | 98-9620 | 1 | Overflow Pipe ASM |
| 20 | 98-9431 | 1 | Screw-Bleeder, Air |
| 30 | 98-7654 | 1 | Gasket |
| 40 | 98-9420 | 1 | Overflow Pipe ASM |
| 45 | 112-0182 | 1 | Pipe-Overflow |
| 50 | 98-7671 | 2 | Clip-Pipe |
| 60 | 115-3018 | 3 | Nozzle Holder Kit |
| 65 | 121-2411 | 3 | Nut |
| 70 | 98-7676 | 3 | Gasket |
| 80 | 98-7677 | 3 | Seal-Heat |

| Ref. | Part Number | Qty. | Description |
|---|---|---|---|
| 90 | 98-9622 | 1 | Pipe-Injection |
| 100 | 98-9654 | 1 | Pipe-Injection |
| 110 | 98-9655 | 1 | Pipe-Injection |
| 120 | 98-7682 | 2 | Clamp-Pipe |
| 130 | 98-7683 | 2 | Clamp-Pipe |
| 140 | 98-7684 | 2 | Screw (W/Washer) |
| 150 | 130-1411 | 3 | Plug-Glow |
| 160 | 98-9631 | 1 | Cord-Plug, Glow |
| 170 | 99-8377 | 3 | Nut-Flange |

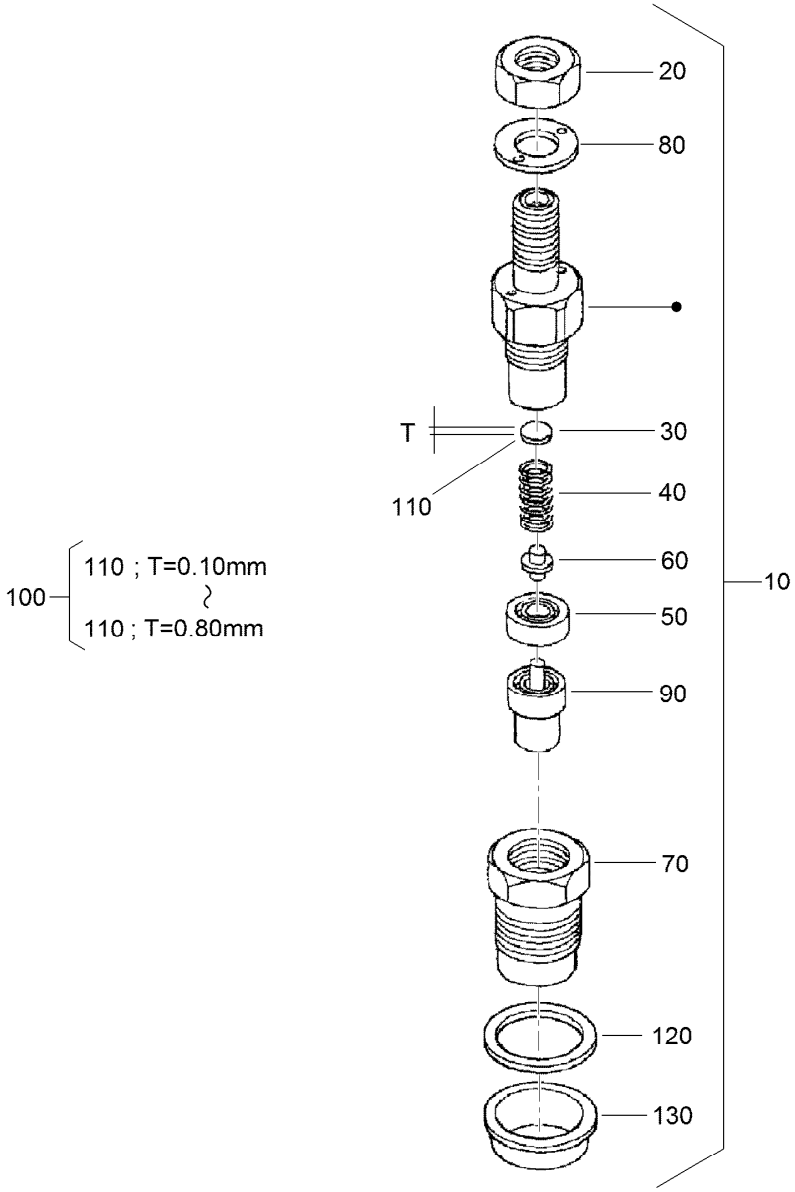


# Nozzle Holder Assembly

| Ref. | Part Number | Qty. | Description |
|---|---|---|---|
| 10 | 115-3018 | 3 | Nozzle Holder Kit |
| 20 | 121-2411 | 3 | Nut |
| 30 | 99-8302 | 3 | Washer-Adjusting |
| 40 | 99-8303 | 3 | Spring-Nozzle |
| 50 | 99-8304 | 3 | Spacer-Distance |
| 60 | 99-8305 | 3 | Rod-Push |
| 70 | 99-8306 | 3 | Nut-Nozzle |
| 80 | 99-8307 | 3 | Washer-Plain |
| 90 | 115-3020 | 3 | Piece-Nozzle |
| 100 | 99-8309 | 3 | Adjusting Washer ASM |
| 110 | 99-8310 | 3 | Washer-Adjust (0.10MM) |

| Ref. | Part Number | Qty. | Description |
|---|---|---|---|
| 110 | 99-8311 | 3 | Washer-Adjust (0.20MM) |
| 110 | 99-8312 | 3 | Washer-Adjust (0.30MM) |
| 110 | 99-8313 | 3 | Washer-Adjust (0.40MM) |
| 110 | 99-8314 | 3 | Washer-Adjust (0.50MM) |
| 110 | 99-8315 | 3 | Washer-Adjust (0.52MM) |
| 110 | 99-8316 | 3 | Washer-Adjust (0.54MM) |
| 110 | 99-8317 | 3 | Washer-Adjust (0.56MM) |
| 110 | 99-8318 | 3 | Washer-Adjust (0.58MM) |
| 110 | 99-8319 | 3 | Washer-Adjust (0.80MM) |
| 120 | 98-7676 | 3 | Gasket |
| 130 | 98-7677 | 3 | Seal-Heat |

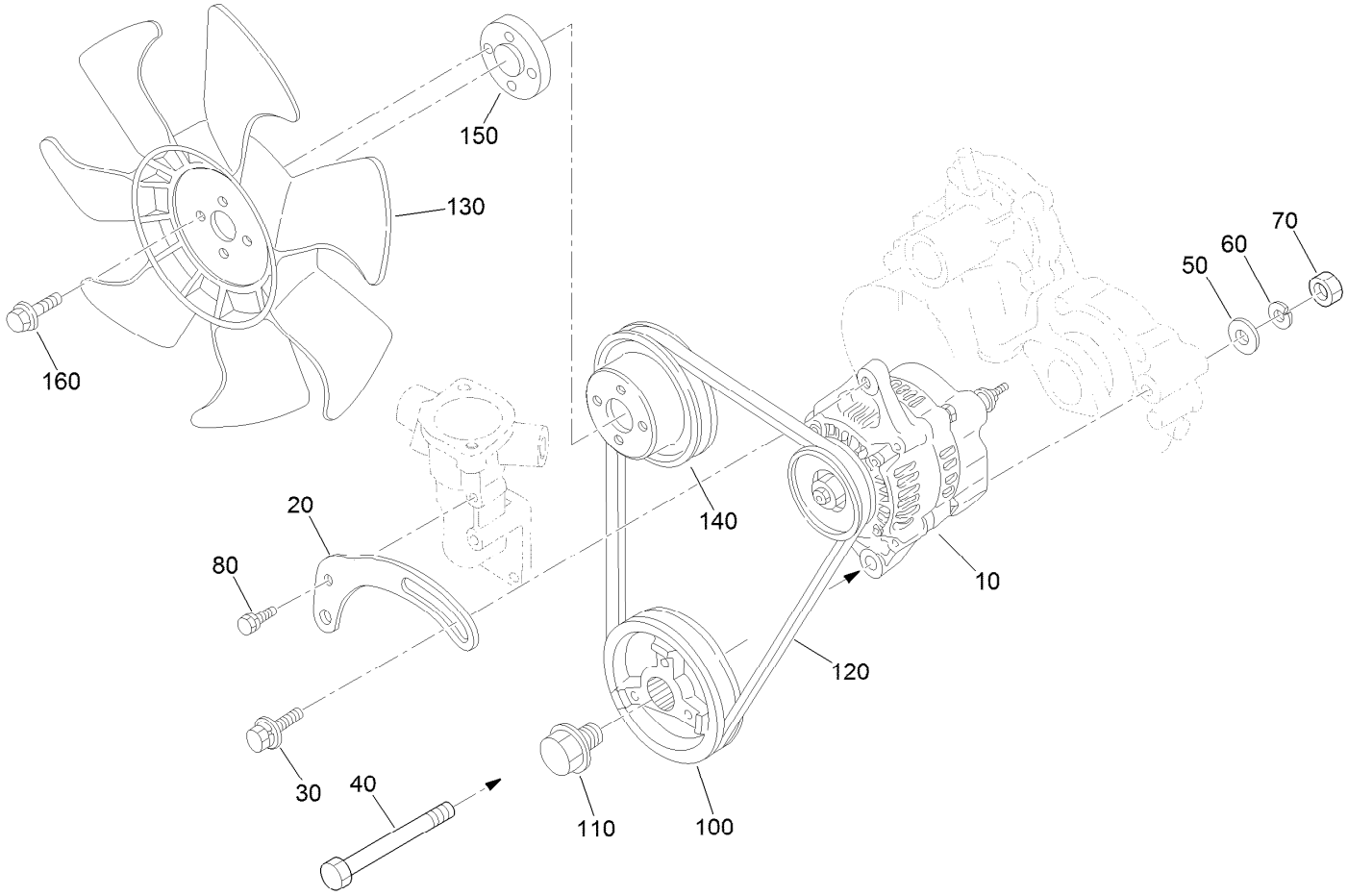


# Alternator, Pulley and Fan Assembly

| Ref. | Part Number | Qty. | Description |
|---|---|---|---|
| 10 | 131-6557 | 1 | Alternator ASM |
| 20 | 112-7047 | 1 | Stay-Dynamo |
| 30 | 108-7088 | 1 | Bolt |
| 40 | 98-9360 | 1 | Bolt |
| 50 | 98-9366 | 1 | Washer-Plain |
| 60 | 98-7738 | 1 | Washer-Spring |
| 70 | 98-7737 | 1 | Nut |
| 80 | 98-7692 | 1 | Bolt |
| 100 | 98-9473 | 1 | Pulley-Drive, Fan |
| 110 | 98-9585 | 1 | Bolt |
| 120 | 104-3494 | 1 | Belt-V |
| 130 | 104-4246 | 1 | Fan-Engine |
| 140 | 130-1567 | 1 | Pulley-Fan |
| 150 | 108-2872 | 1 | Collar-Fan |
| 160 | 108-2873 | 4 | Bolt-Flange |

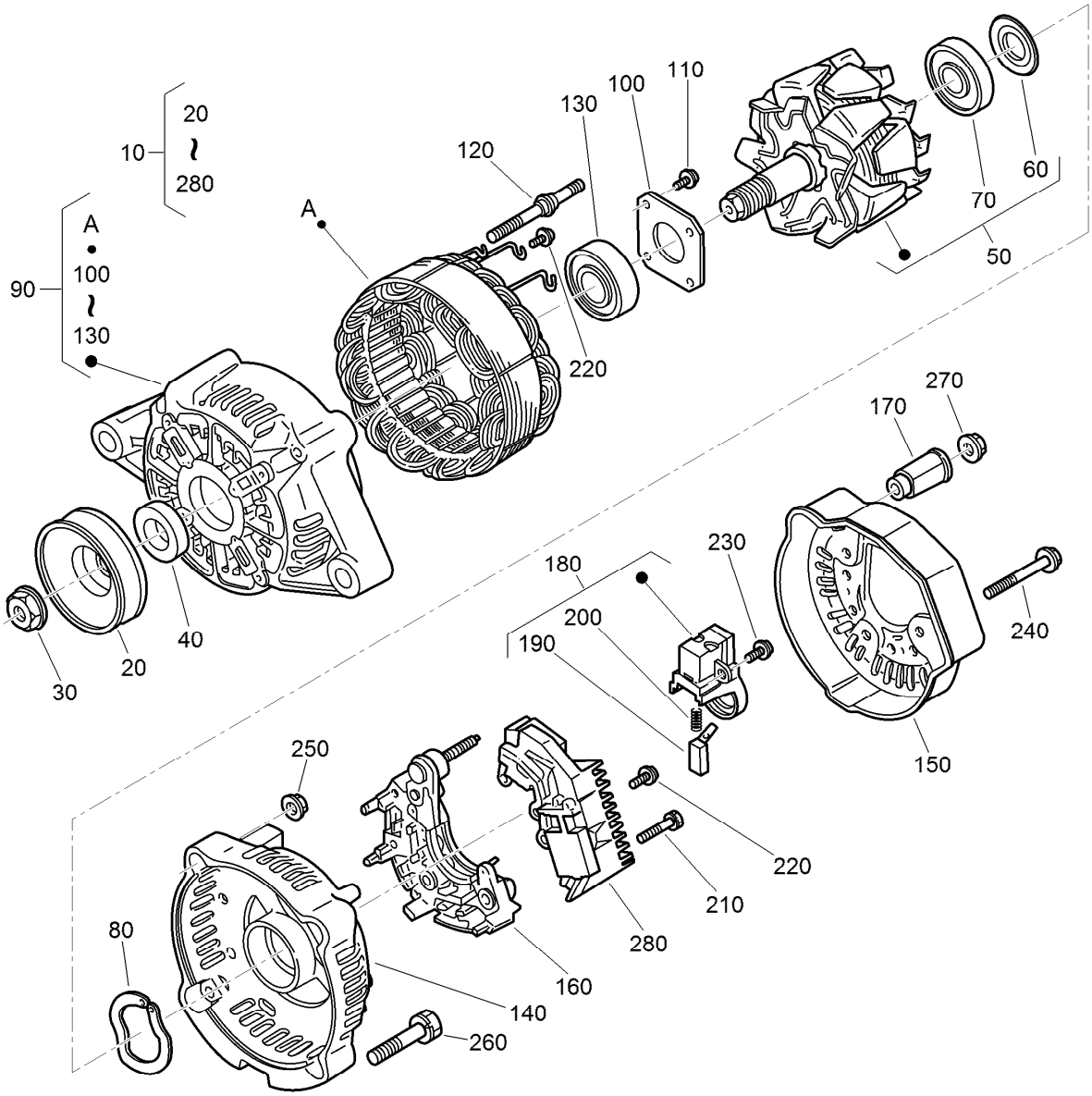


# Alternator Components Assembly

| Ref. | Part Number | Qty. | Description |
|---|---|---|---|
| 10 | 131-6557 | 1 | Alternator ASM |
| 20 | 98-9453 | 1 | Pulley-Dynamo |
| 30 | 98-7708 | 1 | Nut |
| 40 | 98-7709 | 1 | Collar |
| 50 | 107-0136 | 1 | Rotor ASM |
| 60 | 98-7711 | 1 | Cover-Bearing |
| 70 | 107-0138 | 1 | Bearing-Ball |
| 80 | 98-7713 | 1 | Washer-Thrust |
| 90 | 107-0139 | 1 | Drive End Frame ASM |
| 100 | 98-7715 | 1 | Plate-Retainer |
| 110 | 98-7716 | 4 | Screw-Head, Round |
| 120 | 98-7717 | 2 | Bolt-Through |
| 130 | 133-2811 | 1 | Bearing |
| 140 | 107-9087 | 1 | Frame-End |

| Ref. | Part Number | Qty. | Description |
|---|---|---|---|
| 150 | 107-0140 | 1 | Cover-End |
| 160 | 127-1612 | 1 | Rectifier ASM |
| 170 | 98-7722 | 1 | Bushing-Insulation |
| 180 | 107-0141 | 1 | Brush Holder ASM |
| 190 | 98-7724 | 2 | Brush |
| 200 | 98-7725 | 2 | Spring-Brush |
| 210 | 98-7726 | 2 | Screw-Head, Round |
| 220 | 98-7727 | 6 | Screw-Head, Round |
| 230 | 98-7728 | 1 | Screw-Head, Round |
| 240 | 98-7729 | 3 | Bolt |
| 250 | 98-7730 | 2 | Nut |
| 260 | 98-7731 | 2 | Bolt |
| 270 | 98-7732 | 1 | Nut |
| 280 | 110-3799 | 1 | Regulator ASM |

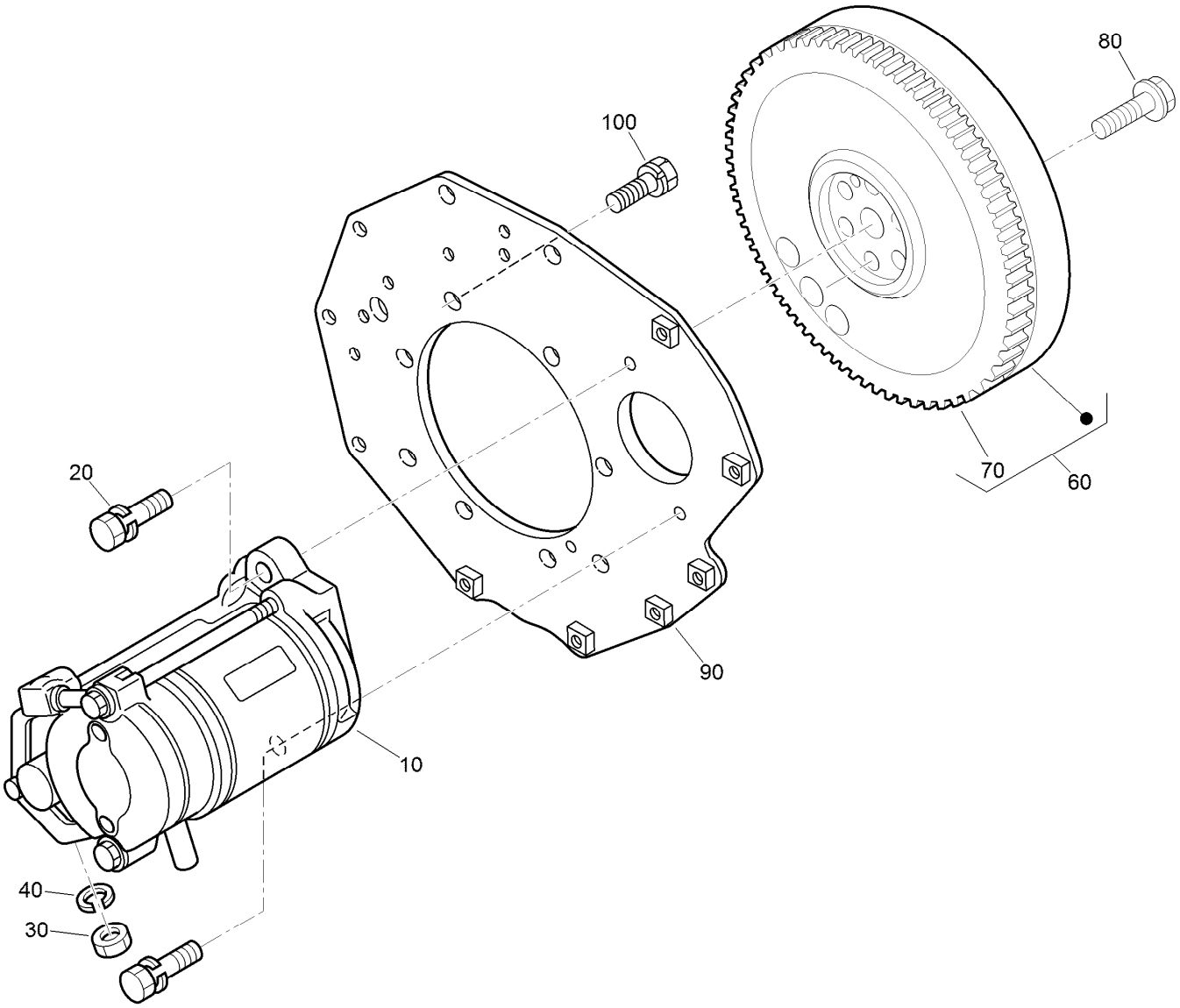


# Starter and Flywheel Assembly

| *Ref.* | *Part Number* | *Qty.* | *Description* |
|---|---|---|---|
| 10 | 98-9705 | 1 | Starter ASM |
| 20 | 98-7697 | 2 | Bolt |
| 30 | 98-7739 | 1 | Nut |
| 40 | 105-2893 | 1 | Washer-Spring |
| 60 | 105-3784 | 1 | Flywheel ASM |
| 70 | 115-3015 | 1 | Gear-Ring |
| 80 | 98-9537 | 6 | Bolt-Flywheel |
| 90 | 98-9486 | 1 | Plate-End, Rear |
| 100 | 98-9392 | 8 | Bolt |

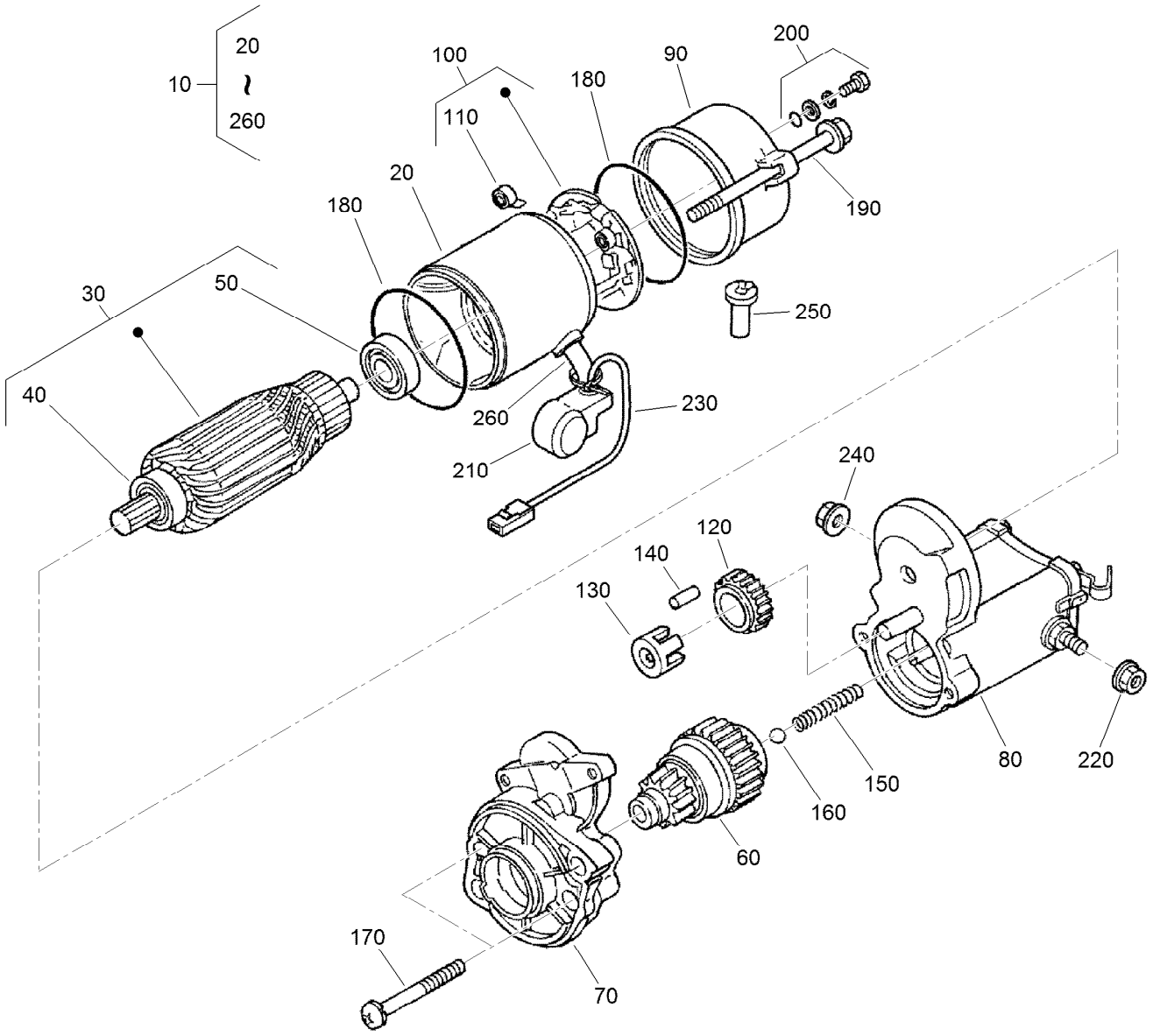


# Starter Component Assembly

| Ref. | Part Number | Qty. | Description |
|---|---|---|---|
| 10 | 98-9705 | 1 | Starter ASM |
| 20 | 104-8608 | 1 | Yoke ASM |
| 30 | 98-7742 | 1 | Armature ASM |
| 40 | 98-7744 | 1 | Bearing |
| 50 | 98-7743 | 1 | Bearing |
| 60 | 99-8373 | 1 | Clutch-Running, Over |
| 70 | 99-8374 | 1 | Frame-End, Drive |
| 80 | 105-3746 | 1 | Magnetic Switch ASM |
| 90 | 98-7748 | 1 | Frame-End |
| 100 | 98-7749 | 1 | Brush Holder ASM |
| 110 | 98-7750 | 4 | Spring-Brush |
| 120 | 98-7751 | 1 | Gear |
| 130 | 98-7752 | 1 | Retainer |

| Ref. | Part Number | Qty. | Description |
|---|---|---|---|
| 140 | 98-7753 | 5 | Roller |
| 150 | 98-7754 | 1 | Spring |
| 160 | 98-7755 | 1 | Ball |
| 170 | 98-7756 | 2 | Bolt |
| 180 | 98-7757 | 2 | O-Ring |
| 190 | 100-9240 | 2 | Bolt |
| 200 | 98-7758 | 2 | Bolt ASM |
| 210 | 99-8375 | 1 | Cover |
| 220 | 99-8371 | 1 | Nut-Hex |
| 230 | 98-9711 | 1 | Cord-Solenoid, Stop |
| 240 | 99-8376 | 1 | Nut-Hex |
| 250 | 98-7759 | 1 | Pipe-Drain |
| 260 | 98-9712 | 1 | Band-Cover |

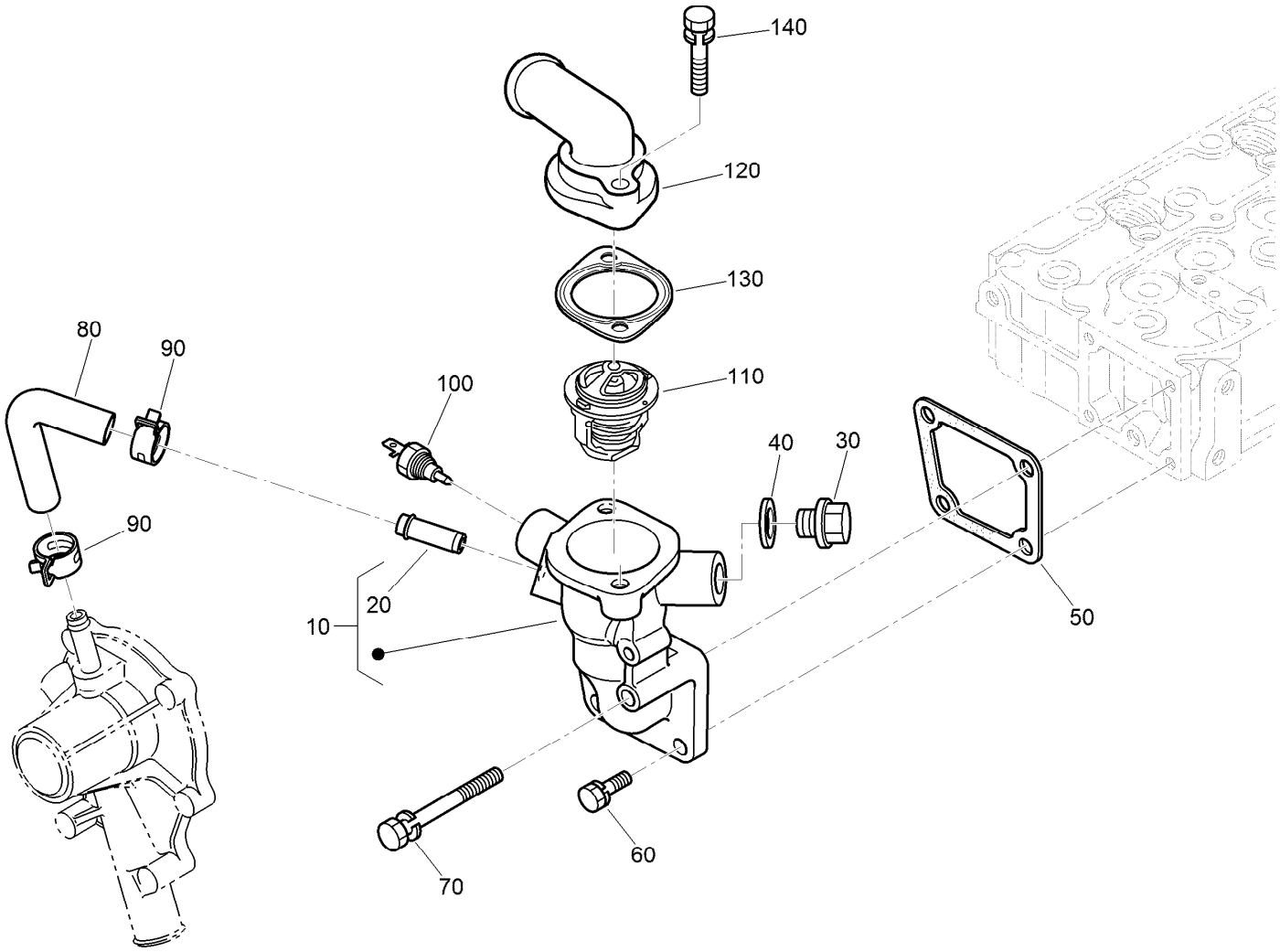


# Water Flange and Thermostat Assembly

| Ref. | Part Number | Qty. | Description |
|---|---|---|---|
| 10 | 98-9713 | 1 | Water Flange ASM |
| 20 | 98-9580 | 1 | Pipe-Return, Water |
| 30 | 105-3747 | 1 | Plug |
| 40 | 99-3583 | 1 | Gasket |
| 50 | 98-9638 | 1 | Gasket-Flange, Water |
| 60 | 98-7692 | 3 | Bolt |
| 70 | 98-9356 | 1 | Bolt |
| 80 | 98-9578 | 1 | Pipe-Return, Water |
| 90 | 125-9078 | 2 | Clamp-Hose |
| 100 | 98-9719 | 1 | Thermoswitch |
| 110 | 98-7778 | 1 | Thermostat ASM |
| 120 | 104-4804 | 1 | Outlet-Water |
| 130 | 105-3748 | 1 | Gasket-Thermostat |
| 140 | 98-7777 | 2 | Bolt |

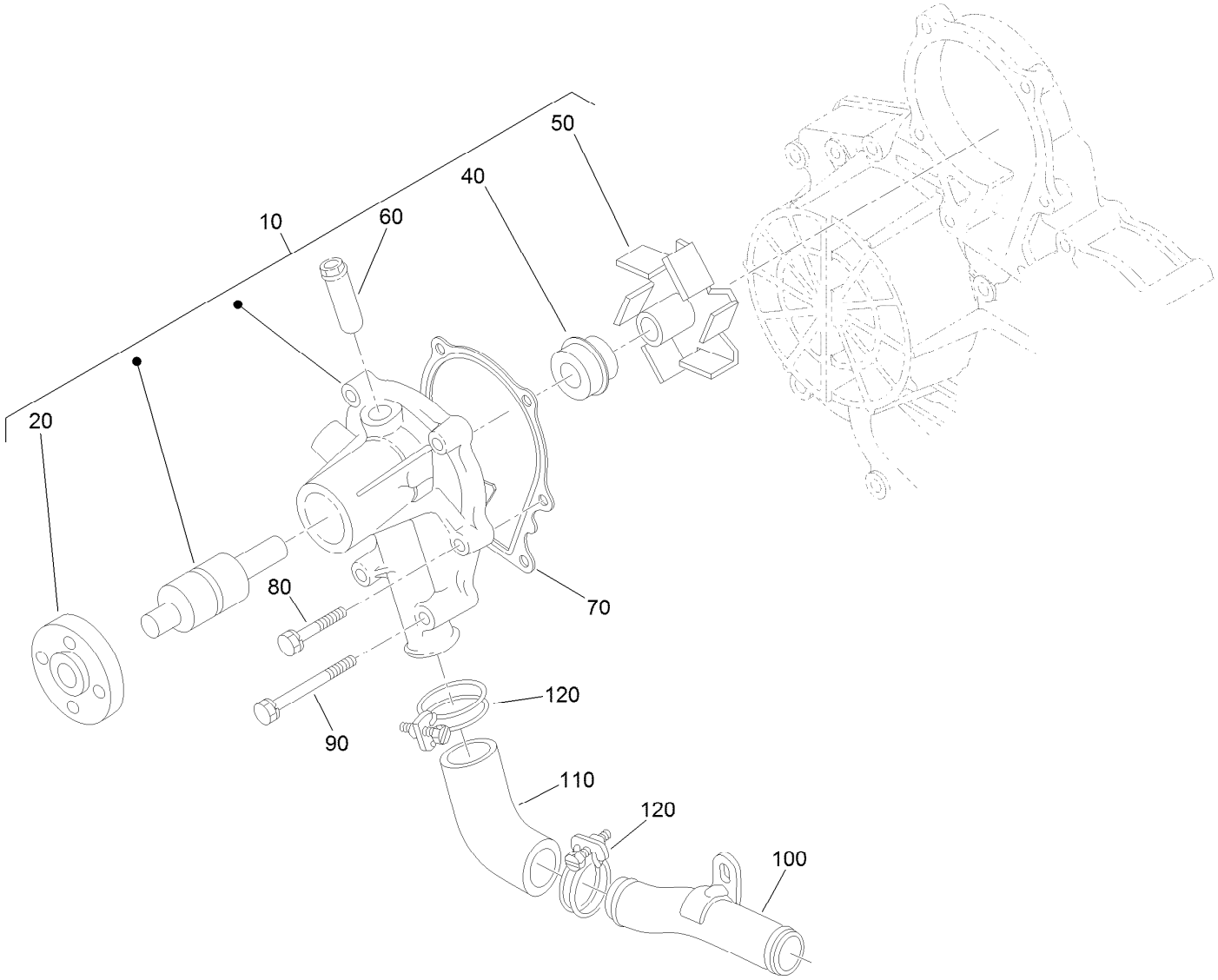


# Water Pump Assembly

| Ref. | Part Number | Qty. | Description |
|---|---|---|---|
| 10 | 107-9089 | 1 | Water Pump ASM |
| 20 | 99-3516 | 1 | Flange-Pump, Water |
| 40 | 105-3750 | 1 | Mechanical Seal ASM |
| 50 | 112-7017 | 1 | Impeller-Pump, Water |
| 60 | 100-1932 | 1 | Pipe-Return, Water |
| 70 | 99-3454 | 1 | Gasket-Pump, Water |
| 80 | 98-9353 | 4 | Bolt |
| 90 | 107-9090 | 2 | Bolt |
| 100 | 98-9716 | 1 | Pipe-Water |
| 110 | 107-9091 | 1 | Pipe-Water |
| 120 | 127-0439 | 2 | Clamp-Hose |

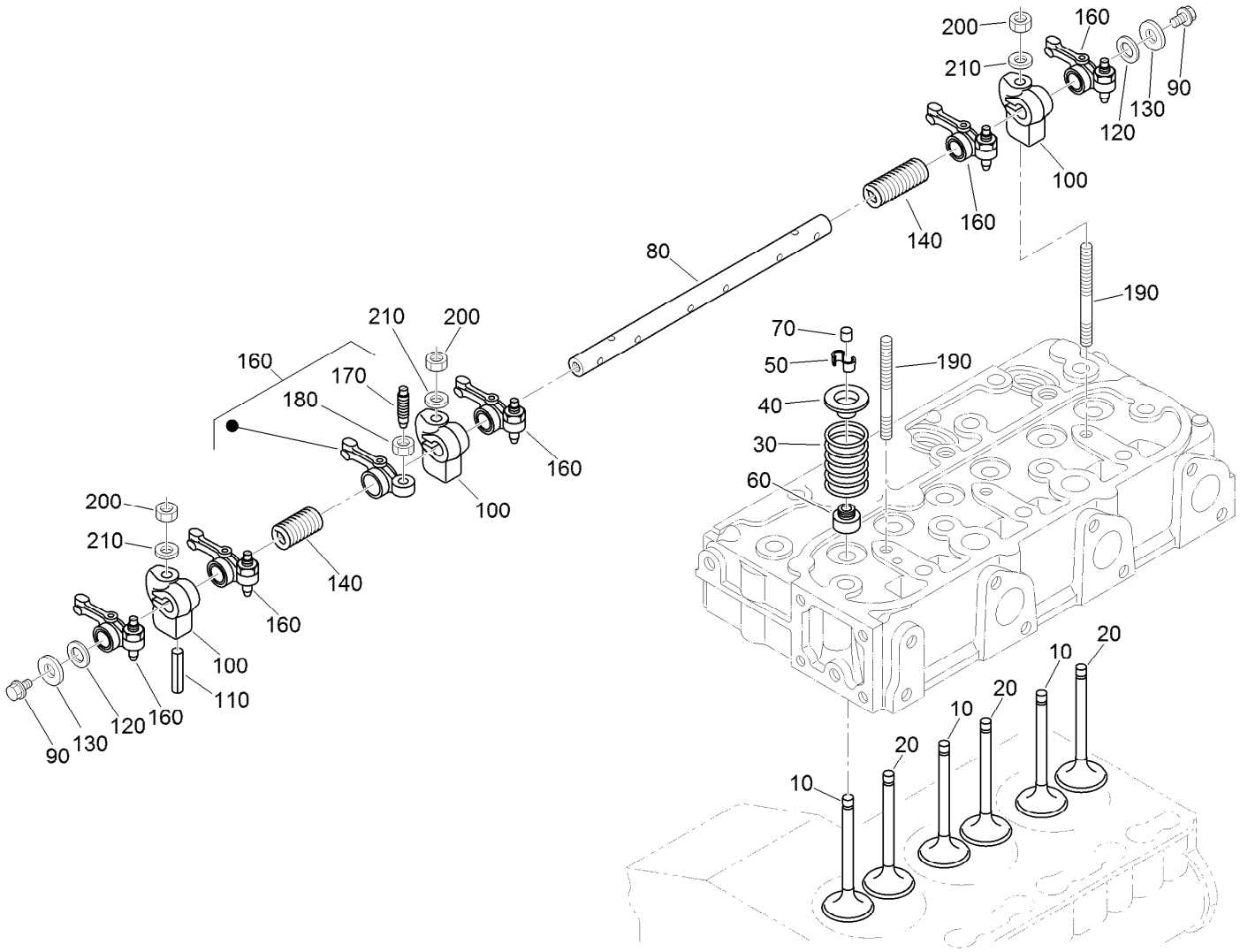


# Valve and Rocker Arm Assembly

| Ref. | Part Number | Qty. | Description |
|---|---|---|---|
| 10 | 112-7018 | 3 | Valve-Inlet |
| 20 | 120-2564 | 3 | Valve-Exhaust |
| 30 | 98-9648 | 6 | Spring-Valve |
| 40 | 107-9092 | 6 | Retainer-Spring |
| 50 | 117-7572 | 6 | Collet-Spring, Valve |
| 60 | 99-8385 | 6 | Seal-Stem, Valve |
| 70 | 98-9497 | 6 | Cap-Valve |
| 80 | 130-1248 | 1 | Shaft-Arm, Rocker |
| 90 | 99-8363 | 2 | Bolt-Flange |
| 100 | 98-9505 | 3 | Bracket-Arm, Rocker |

| Ref. | Part Number | Qty. | Description |
|---|---|---|---|
| 110 | 105-3758 | 1 | Pin-Spring |
| 120 | 98-9507 | 2 | Washer-Shaft, Rocker Arm |
| 130 | 110-3832 | 2 | Washer-Plain |
| 140 | 98-9504 | 2 | Spring-Arm, Rocker |
| 160 | 112-7020 | 6 | Rocker Arm ASM |
| 170 | 98-9502 | 6 | Screw-Adjusting |
| 180 | 98-9503 | 6 | Nut |
| 190 | 98-9506 | 3 | Stud |
| 200 | 98-9393 | 3 | Nut |
| 210 | 98-9385 | 3 | Washer-Flat |

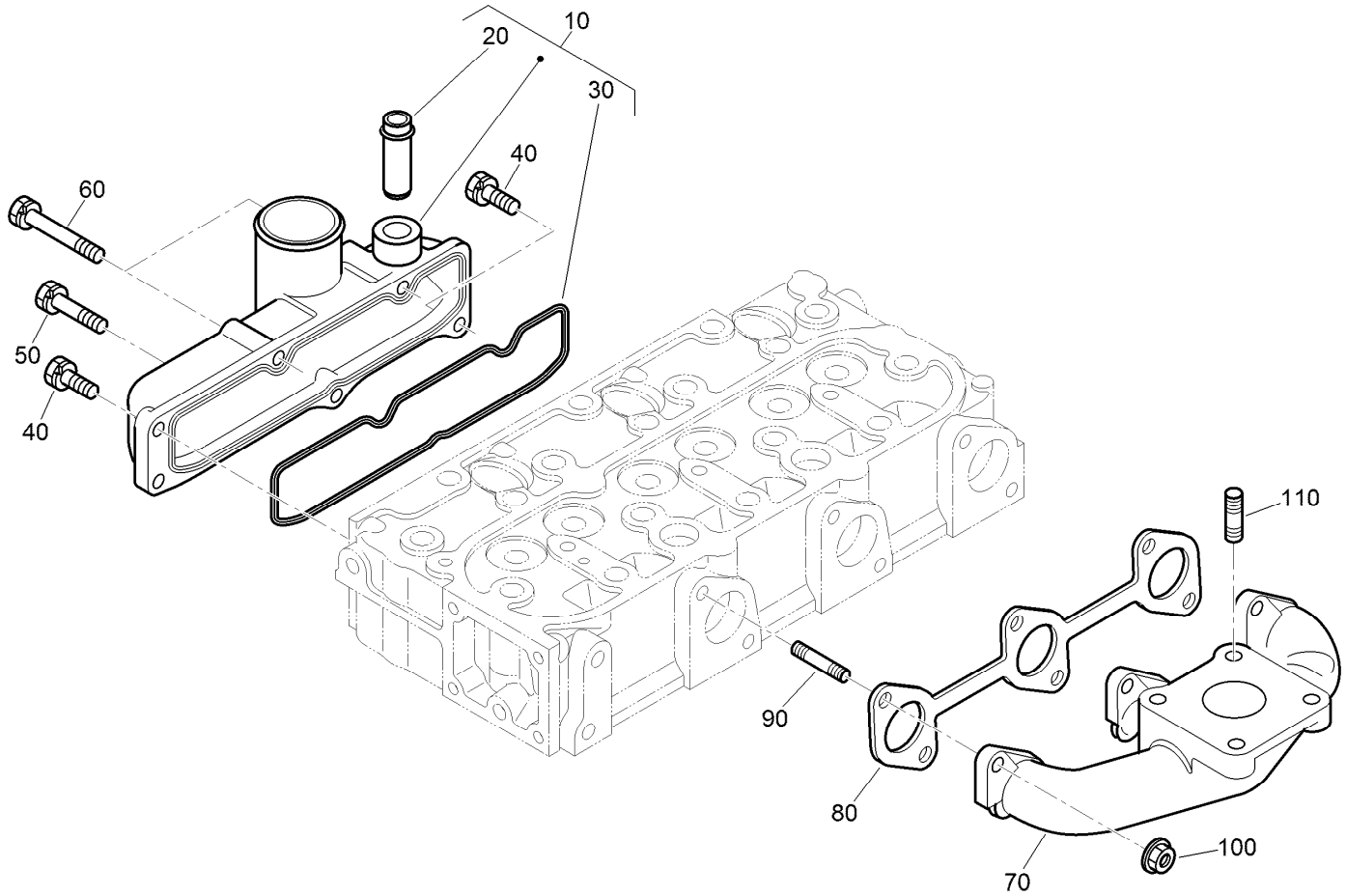


# Inlet and Exhaust Manifold Assembly

| *Ref.* | *Part Number* | *Qty.* | *Description* |
|---|---|---|---|
| 10 | 107-7843 | 1 | Manifold Inlet ASM |
| 20 | 98-9492 | 1 | Joint-Pipe, Breather |
| 30 | 98-9609 | 1 | Gasket-Manifold, Inlet |
| 40 | 127-0403 | 3 | Bolt-Flange |
| 50 | 98-9353 | 1 | Bolt |
| 60 | 125-9063 | 2 | Bolt-Sems |
| 70 | 107-9093 | 1 | Manifold-Exhaust |
| 80 | 99-8327 | 1 | Gasket-Manifold, Exhaust |
| 90 | 98-9588 | 6 | Stud |
| 100 | 98-9665 | 6 | Nut |
| 110 | 98-7769 | 4 | Stud |

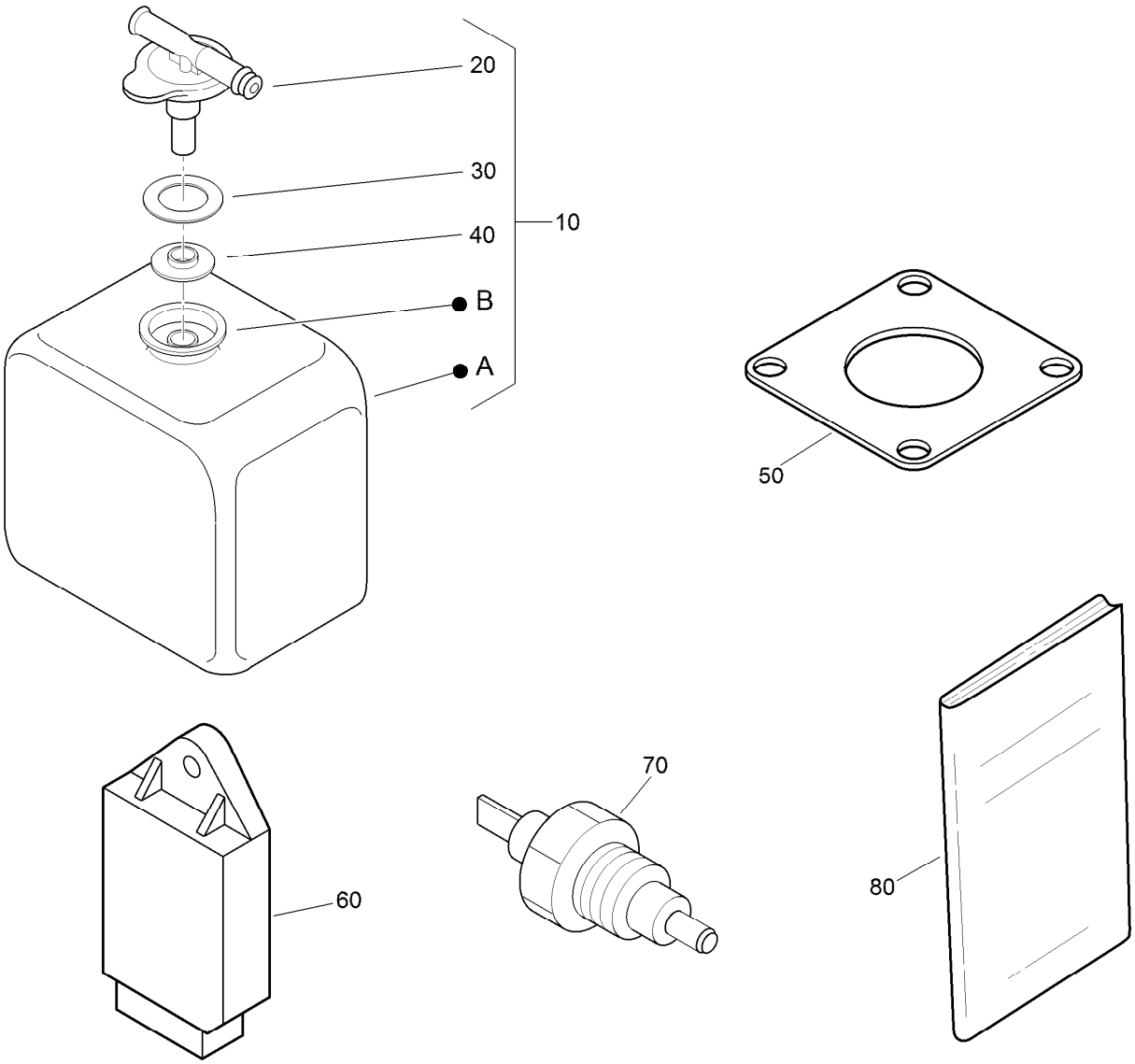


# Miscellaneous Engine Parts

| *Ref.* | *Part Number* | *Qty.* | *Description* |
|---|---|---|---|
| 10 | 104-9318 | 1 | Bottle-Overflow |
| 20 | 115-4132 | 1 | Cap |
| 30 | 105-3755 | 1 | Gasket |
| 40 | 105-3756 | 1 | Plate |
| 50 | 99-8343 | 1 | Gasket-Muffler |
| 60 | 98-7611 | 1 | Controller-Glow |
| 70 | 106-7772 | 1 | Thermoswitch |
| 80 | 130-1543 | 1 | Manual-Operator |

# Attachments and Accessories

## For 03820 Reelmaster 3555 Traction Unit

| Product Name | Model/Part |
|---|---|
| 22in Fairway Flex Grass Basket Kit | 03415 |
| 22in Fairway Compact Grass Basket Kit | 03416 |
| 22in 8-Blade DPA Cutting Unit | 03487 |
| 22in 11-Blade DPA Cutting Unit | 03488 |
| Premium All Purpose Grease (Tube) | 108-1190 |
| Premium Synthetic Bio-Degradable Hydraulic Fluid (5 Gallon Pail) | 119-2157 |
| Premium Synthetic Bio-Degradable Hydraulic Fluid (55 Gallon Drum) | 119-2158 |
| Treaded 22-12x12 Tire Asm | 121-7924 |
| Step | 127-8562-03 |
| PX Hydraulic Fluid (5 Gal) | 133-8086 |
| PX Hydraulic Fluid (55 Gal) | 133-8087 |
| Cutting Unit Lock Kit, Reelmaster 3555 or 3575 Traction Unit | 138-6938 |
| Brush and Handle Kit | 29-9100 |
| White Universal Sunshade | 30669 |
| Red Universal Sunshade | 30671 |
| 1000 Hour MVP Kit | 44963 |
| Diagnostic Display Box | 85-4750 |

TORO®

Count on it.