Form No. 3450-144 Rev B

TORO®

Count on it.

Parts Catalog

Reelmaster® 3575

Traction Unit

Model No. 03821—Serial No. 410200000 and Up

Register at www.Toro.com.
Original Instructions (EN)

CE

3450-144 B

Ordering Replacement Parts

To order replacement parts, please supply the part number, the quantity, and the description of each part desired.

Understanding Reference Numbers

Each identified part in an illustration has a reference number. The reference number for a part also appears in the parts list, along with other information about the part.

This catalog uses two special reference number formats, one to indicate parts in a service assembly and another to indicate the quantity of a given part in an illustration.

Service Assembly Reference Numbers

Parts in service assemblies have reference numbers in the form a:b. The a represents the reference number of the entire service assembly and the b represents a sequential number unique to each part within the service assembly.

For example, a wheel assembly might be identified by reference number 6, the tire by 6:1, the valve by 6:2, and the wheel by 6:3. When you order the assembly identified by reference number 6, you receive all parts identified by reference numbers 6:1,6:2, and 6:3. However, you may also order any part individually. Reference numbers of this type appear in illustration and in parts lists.

Reference Numbers Indicating Quantity

In an illustration, if a reference number indicates more than one part, the reference number has the form nX y. The n represents the quantity of the part, the X is the multiplication symbol, and the y represents the reference number.

For example, in an illustration, the reference number 2X 37 means that two of the parts identified by reference number 37 are indicated.

Contents

Frame and Front Axle Assembly . . . 5
Engine Mount Assembly . . . 7
Muffler and Air Cleaner Assembly . . . 8
Air Cleaner Assembly No. 93-2190 . . . 9
Radiator and Oil Cooler Assembly . . . 10
No. 1, No. 4 and No. 5 Lift Arm Assembly . . . 11
Hydraulic Cylinder Assembly No. 119-6987 . . . 13
Hydraulic Cylinder Assembly No. 119-6988 . . . 14
No. 2 and No. 3 Lift Arm Assembly . . . 15
Hydraulic Cylinder Assembly No. 138-6941 . . . 17
Fuel Tank and Filter Assembly . . . 18
Hydraulic Tank and Filter Assembly . . . 19
Battery Assembly . . . 20
Seat and Heat-Shield Assembly . . . 21
Seat Assembly No. 116-3998 . . . 22
Control Panel Assembly . . . 23
Joystick Bracket Assembly No. 120-5280 . . . 24
Parking Brake Assembly . . . 25
Main Wire Harness Assembly . . . 26
Steering Arm Assembly . . . 27
Steering Valve Assembly No. 144-2099 . . . 28
Front Shroud and Floorplate Assembly . . . 29
Traction Control Assembly . . . 30
Hood and Screen Assembly . . . 31
Wheel and Brake Assembly . . . 32
Hydraulic Motor Assembly No. 110-8786 . . . 33
Hydraulic Motor Assembly No. 110-8785 . . . 34
Brake Assembly No. 127-8535 . . . 35
Rear Fork Assembly . . . 36
Steering Cylinder Assembly No. 121-7835 . . . 37
Hydraulic Motor Assembly No. 95-8694 . . . 38
Neutral Arm Assembly . . . 39
Piston Pump and Gear Pump Assembly . . . 40
Hydraulic Pump Assembly No. 104-4890 . . . 41
Hydraulic Gear Pump Assembly No. 121-7841 . . . 43
Traction Hydraulic Assembly . . . 44
Lift Manifold and Steering Circuit Assembly . . . 46
Lift Manifold Assembly No. 138-6998 . . . 47
Front Mow Hydraulic Circuit Assembly . . . 48
Mow Manifold Assembly No. 139-6025 . . . 50
Hydraulic Gear Motor Assembly No. 127-8436 . . . 51
Rear Mow Hydraulic Circuit Assembly . . . 52
Crankcase Assembly . . . 54
Oil Pan and Dipstick Assembly . . . 55
Cylinder Head Assembly . . . 56
Gear Case and Oil Filter Cartridge Assembly . . . 57
Cylinder Head Cover Assembly . . . 58
Main Bearing Case Assembly . . . 59
Camshaft and Idle Gear Shaft Assembly . . . 60
Piston and Crankshaft Assembly . . . 61
Fuel Camshaft and Governor Shaft Assembly . . . 62
Idle Apparatus and Stop Solenoid Assembly . . . 63
Solenoid Assembly . . . 64
Injection Pump Assembly . . . 65

© 2023—The Toro® Company
8111 Lyndale Avenue South
Bloomington, MN 55420

Contact us at www.Toro.com.
Printed in the USA.
All Rights Reserved

Contents (continued)

Governor Assembly 66
Speed Control Plate Assembly. 67
Nozzle Holder and Glow Plug Assembly 68
Nozzle Holder Assembly 69
Alternator, Pulley and Fan Assembly 70
Alternator Components Assembly 71
Starter and Flywheel Assembly 72
Starter Component Assembly 73
Water Flange and Thermostat Assembly 74
Water Pump Assembly 75
Valve and Rocker Arm Assembly. 76
Inlet and Exhaust Manifold Assembly 77
Miscellaneous Engine Parts 78
Attachments and Accessories 79

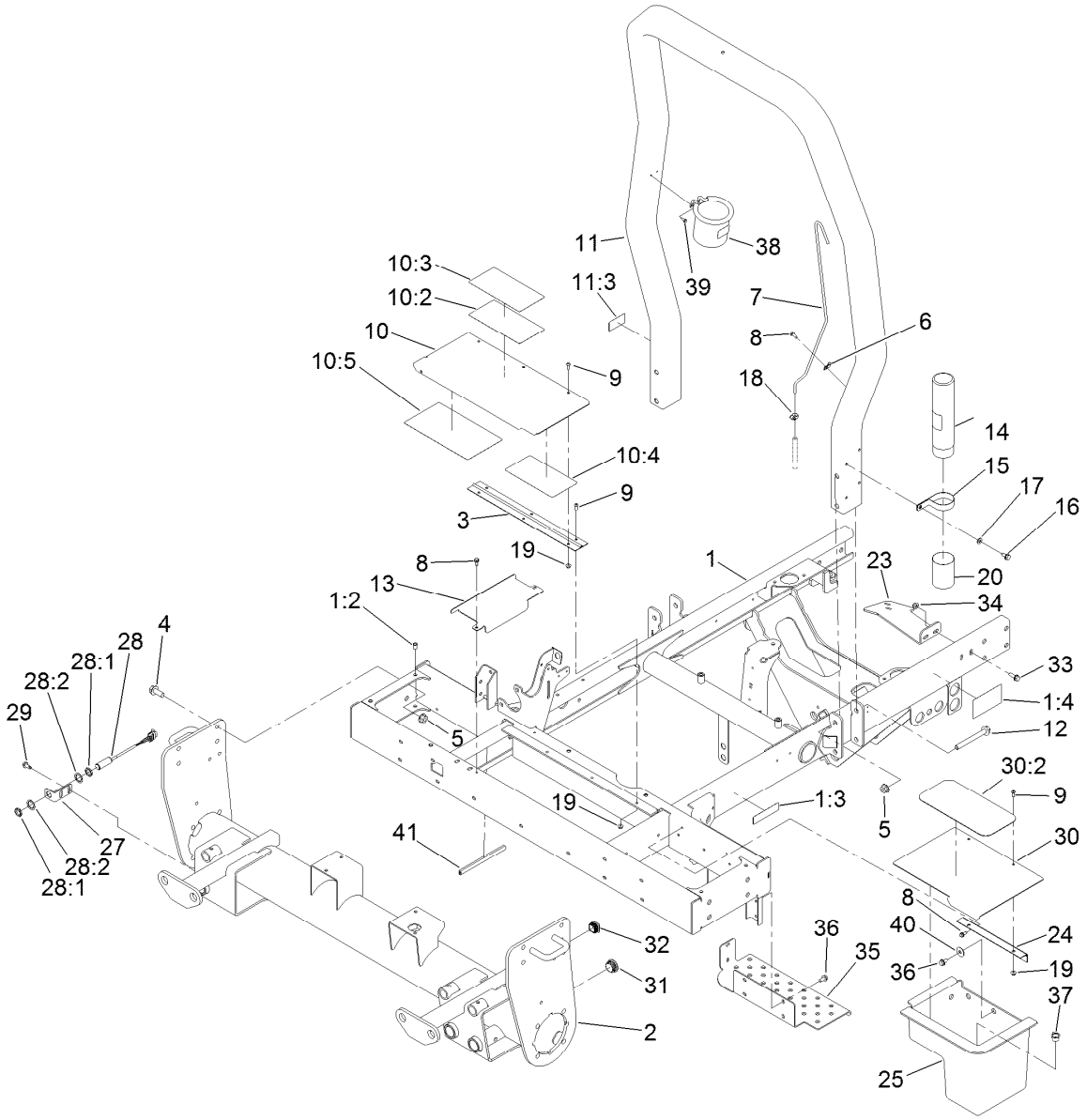

Frame and Front Axle Assembly

Ref.	Part Number	Qty.	Description
1	133-4935	1	Frame ASM
1:2	32148-6	3	Nut-Clinch
1:3	133-8062	1	Decal-Arrestor, Spark
1:4	117-3270	2	Decal-Danger
2	127-8452-03	1	Front Axle ASM
3	127-8517	1	Hinge-Toolbox
4	3234-38	8	Screw-HHF
5	32128-49	12	Nut-HHF
6	2412-72	2	Clip-Closed, Insulated
7	95-8615	1	Tube-Breather
8	32144-10	6	Screw-HWH
9	119-6906	8	Screw-HSBH
10	127-8592	1	Toolbox Cover ASM
10:2	120-1683	1	Decal-Danger
10:3	138-1186	1	Decal-Danger
10:4	133-4901	1	Decal-Reel Speed
10:5	136-3718	1	Decal-Service
11	127-8493	1	ROPS ASM
11:3	136-3702	1	Decal-Safety, ROPS
12	117-3176	4	Screw-HHF
13	127-8547-01	1	Cover-Battery, Inner

Ref.	Part Number	Qty.	Description
14	104-7050	1	Tube-Manual
15	2412-133	2	Clamp-R
16	32144-70	2	Screw-HWHTF
17	3256-23	2	Washer-Plain
18	2412-108	1	Clamp-Worm
19	104-7201	8	Nut-HF, NI
20	104-7048	1	Cap-Housing
23	138-6940-0P	1	Bracket-Filter
24	127-8589	1	Hinge-Toolbox
25	127-8590	1	Box-Storage
27	127-8520	1	Bracket-Switch
28	115-5300	1	Proximity Switch ASM
28:1	117-3207	2	Nut-Hex
28:2	117-3208	2	Washer-Lock, Internal Tooth
29	32104-32	2	Screw-HWH
30	127-8565	1	Cover ASM
30:2	75-0620	1	Tread-Foot, LH
31	110-9012	3	Caplug
32	95-9495	2	Cap
33	3234-29	2	Screw-HHF
34	104-8300	2	Nut-HF, NI

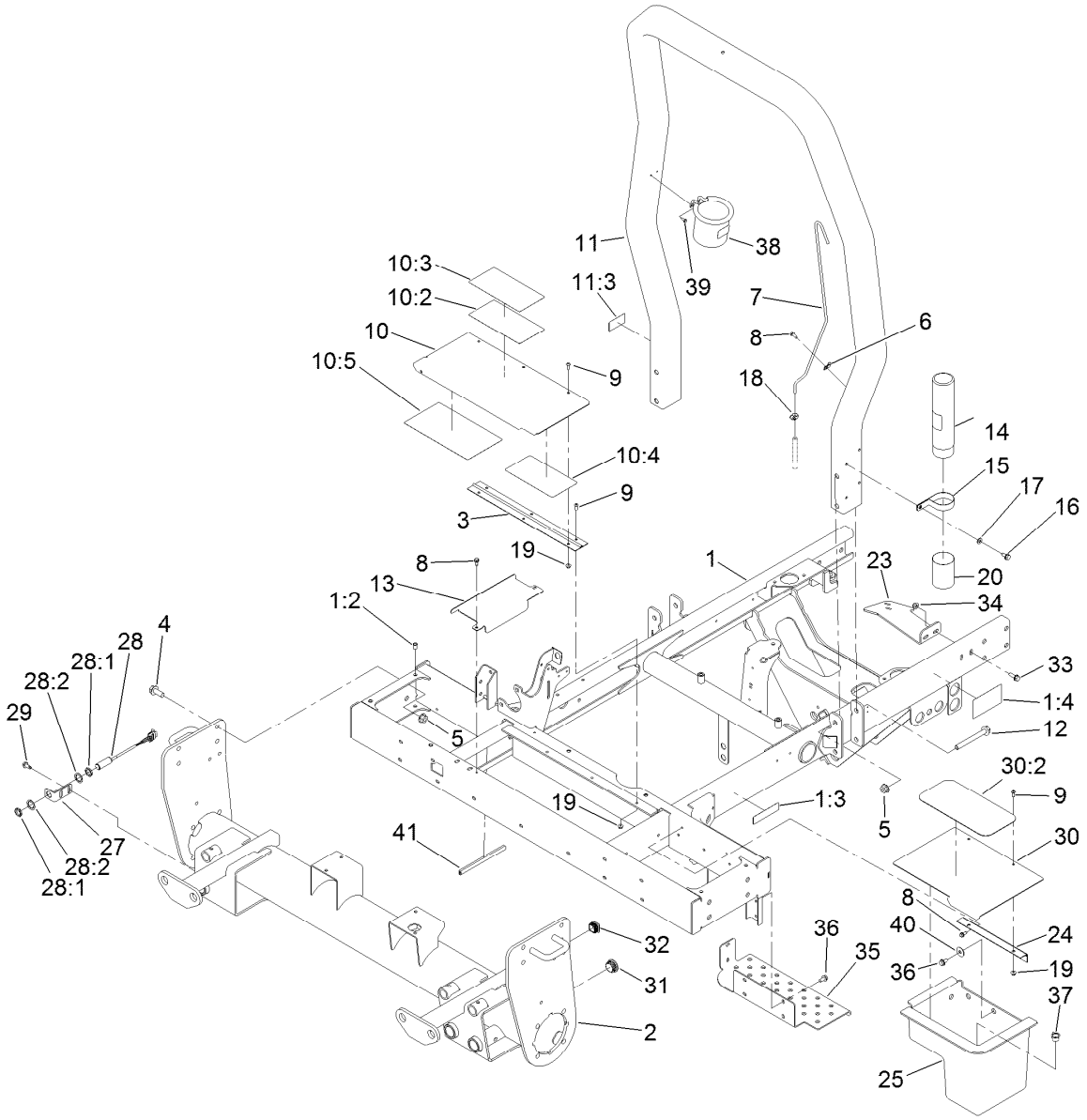

Frame and Front Axle Assembly (continued)

Ref.	Part Number	Qty.	Description
35	127-8443-03	1	Step
36	32144-14	11	Screw-HWHTF
37	2410-72	1	Caplug (L-9)
38	117-2378	1	Holder-Bag
39	32144-1	2	Screw-Taptite
40	3256-35	5	Washer-Flat
41	127-6619	1	Strip-Seal

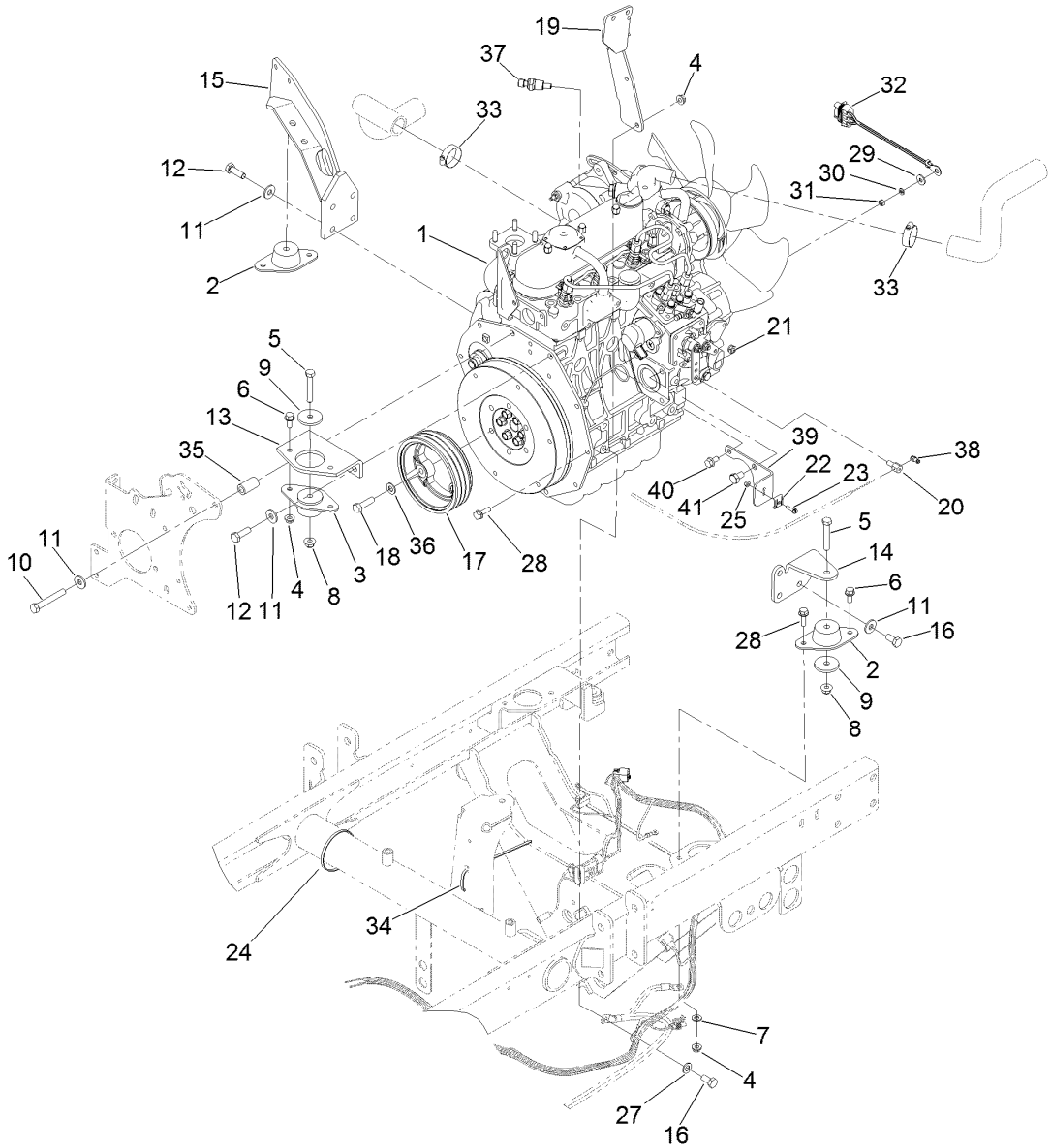

Engine Mount Assembly

Ref.	Part Number	Qty.	Description
1	138-6908	1	Engine-Kubota, D1105
2	121-9076	2	Mount-Engine
3	93-5265	1	Mount-Engine
4	32128-20	8	Nut-HF
5	323-11	3	Screw-HH
6	3234-5	5	Screw-HHF
7	120-9683	1	Washer-Plain
8	104-8301	3	Nut-HF, NI
9	80-8560	3	Washer-Hardened
10	42-9370	1	Screw-HH
11	80-6990	9	Washer-Hardened
12	95-8812	5	Screw-HH
13	99-3618-0P	1	Mount-Engine, Front
14	95-8937-0P	1	Mount-Engine, LH
15	100-4838-0P	1	Mount-Engine
16	63-7790	4	Screw-Cap
17	99-3626	1	Pulley-3V
18	56-2140	3	Screw-HH
19	115-3487-0P	1	Bracket-Mount, Fuel Filter
20	98-9311	1	Swivel-Throttle

Ref.	Part Number	Qty.	Description
21	3296-20	1	Nut-Lock, NI
22	81-1690	1	Clamp-Cable
23	32105-13	1	Screw-HWH
24	3290-379	2	Tie-Cable
25	3296-2	1	Nut-Lock, NI
27	33095-00	1	Washer-Flat
28	3234-17	3	Screw-HHF
29	3256-78	1	Washer-Flat
30	43-5930	1	Washer-Lock, Spring
31	48-7890	1	Nut-Hex
32	99-3441	1	Harness-Wire, Fusible Link
33	2412-34	2	Clamp-Hose
34	3290-378	14	Tie-Cable
35	95-8736	1	Spacer
36	3256-24	3	Washer-Plain
37	119-4478	1	Sender-Temperature
38	112-9919	1	Stop-Cable, Throttle
39	110-9009-0P	1	Bracket-Cable, Throttle
40	33104-016	1	Screw-HHF
41	70-8470	1	Screw-HH

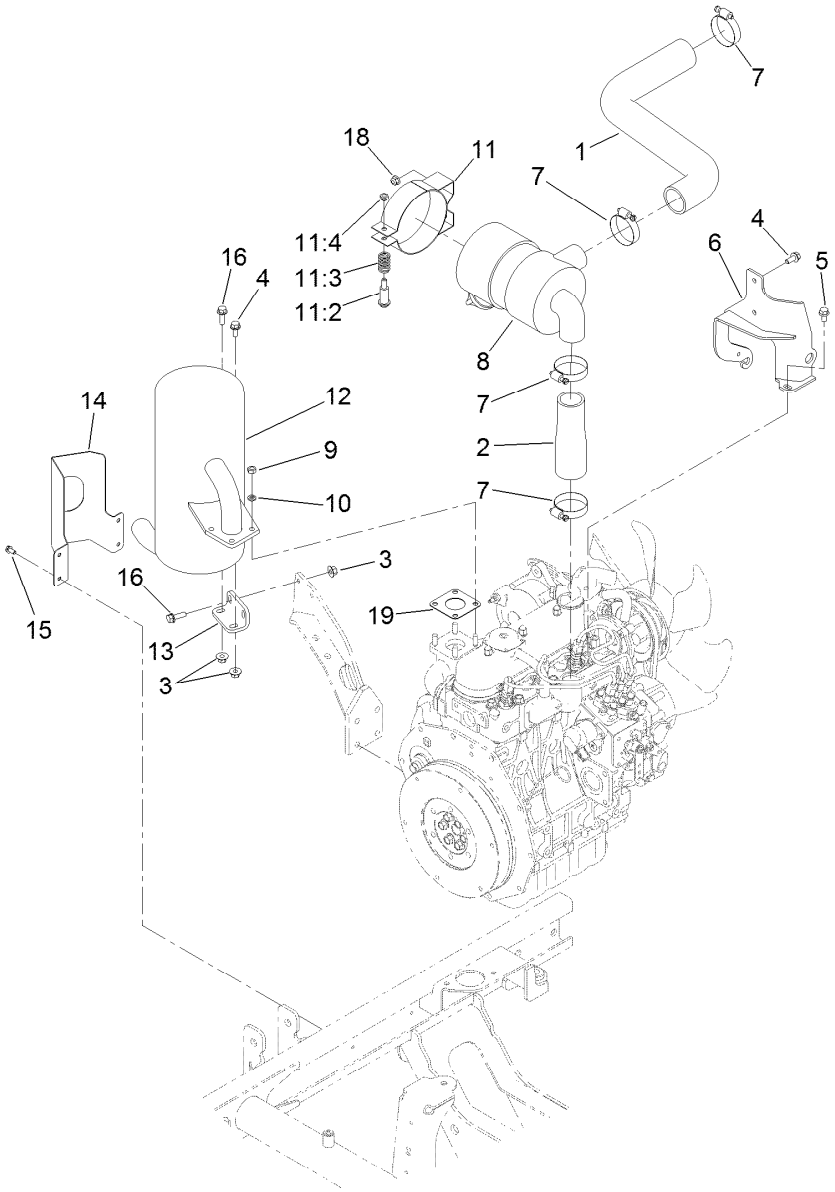

Muffler and Air Cleaner Assembly

Ref.	Part Number	Qty.	Description
1	121-7834	1	Hose-Air Intake, Upper
2	95-8947	1	Hose-Air Inlet, Lower
3	32128-44	4	Nut
4	3234-5	3	Screw-HHF
5	33104-016	3	Screw-HHF
6	136-3154-0P	1	Bracket-Cleaner, Air
7	2412-92	4	Clamp-Hose
8	93-2190	1	Air Cleaner ASM
9	33014-00	4	Nut-Hex
10	3253-4	4	Washer-Lock
11	93-2191	1	Air Cleaner Mounting Band ASM

Ref.	Part Number	Qty.	Description
11:2	94-3653	1	Bolt
11:3	94-3654	1	Spring
11:4	48-9510	1	*obs* Nut
12	104-4834	1	Muffler
13	95-8943-0P	1	Bracket-Muffler
14	99-3425-03	1	Guard-Exhaust
15	32144-4	4	Screw-HWH
16	3234-17	3	Screw-HHF
18	104-8300	2	Nut-HF, NI
19	98-9611	1	Gasket

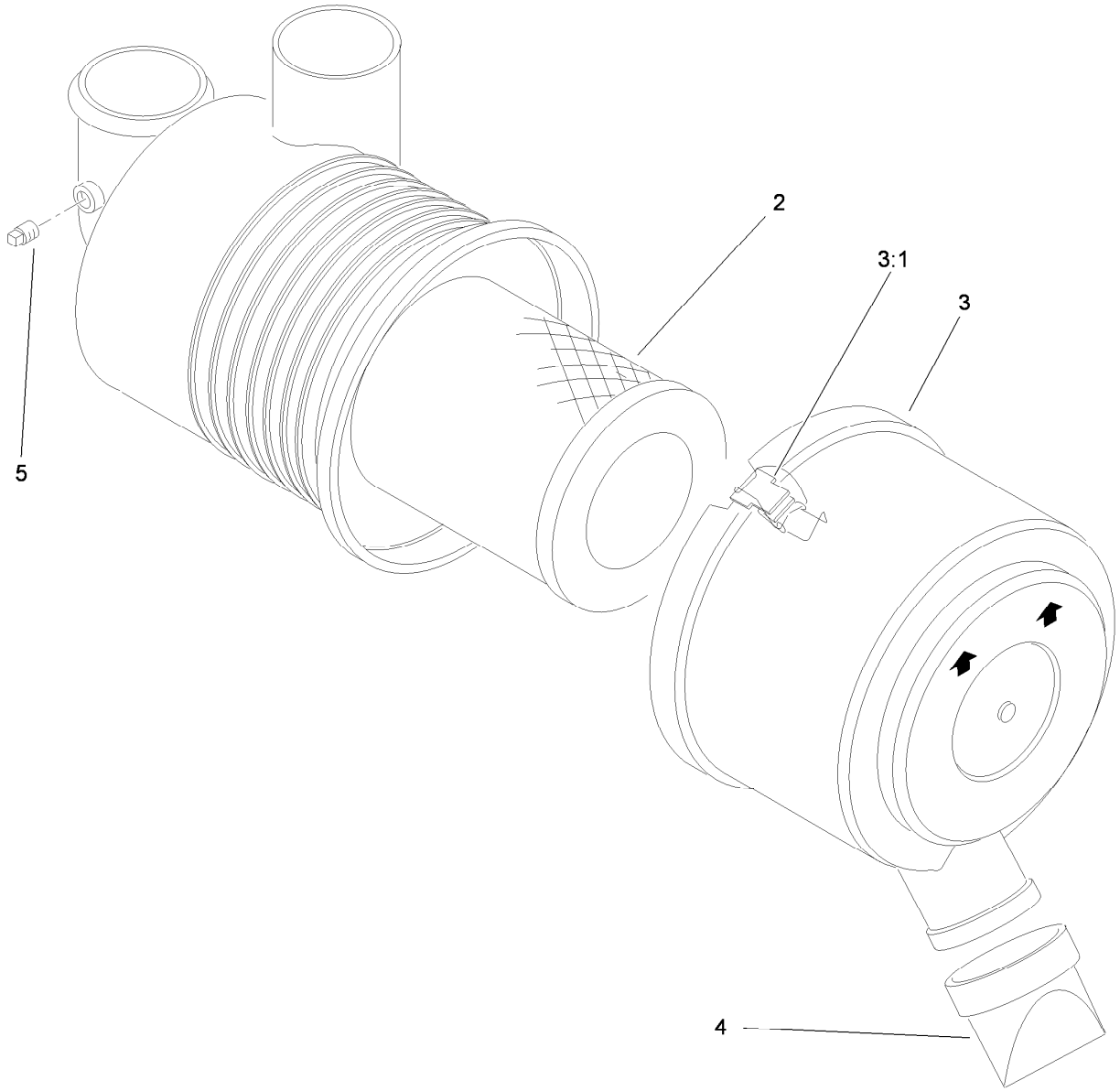

Air Cleaner Assembly No. 93-2190

Ref.	*Part Number*	*Qty.*	*Description*
2	108-3811	1	Filter-Air
3	94-3652	1	Cover ASM
3:1	1-643283	2	Latch-Cleaner, Air
4	87-9400	1	Valve-Vacuator
5	285-17	1	Plug-Pipe

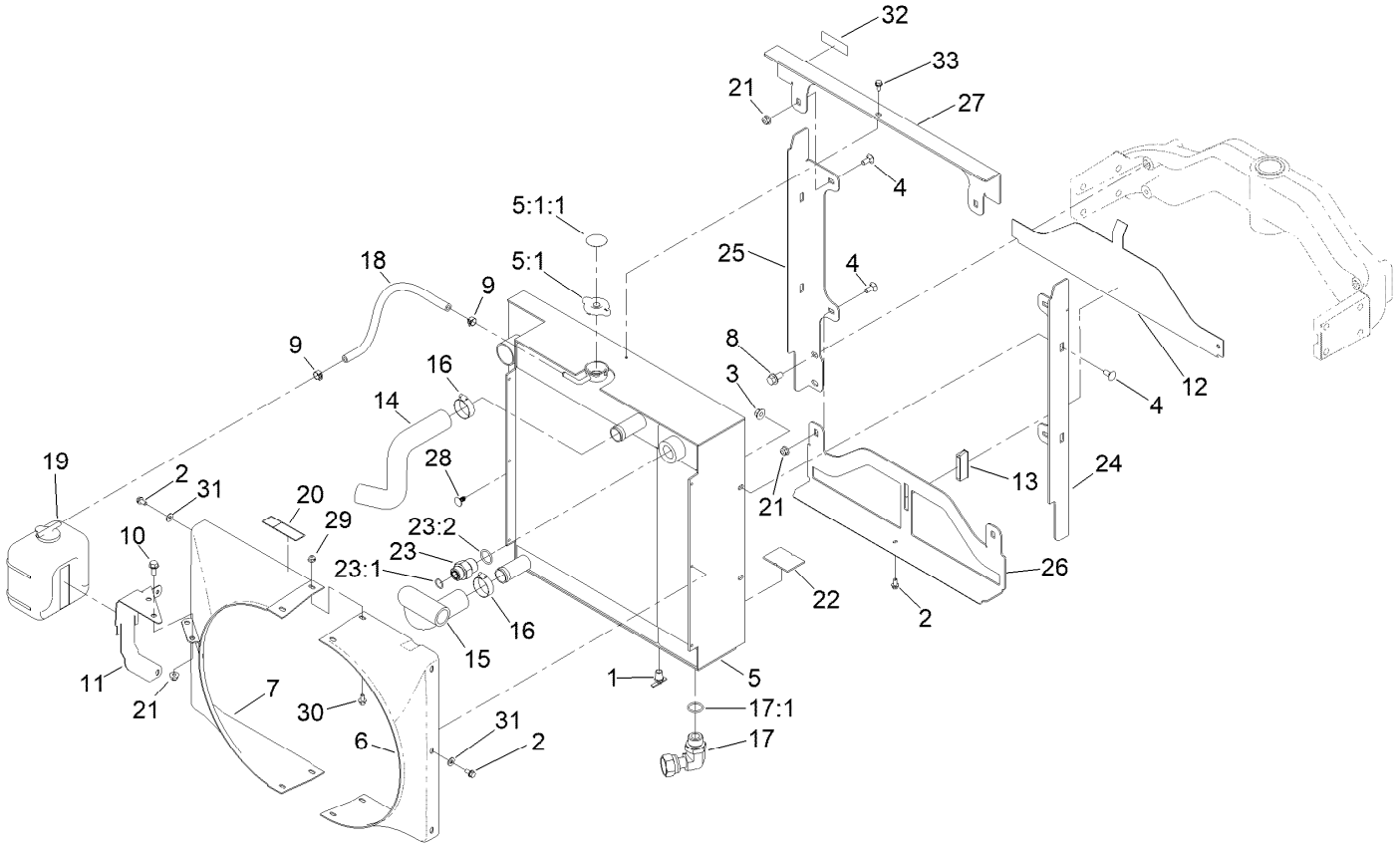

Radiator and Oil Cooler Assembly

Ref.	Part Number	Qty.	Description
1	304-46	1	Draincock
2	32104-116	6	Screw-HWHTF
3	32128-44	4	Nut
4	3230-1	8	Bolt-CARR
5	119-2028	1	Radiator And Oil Cooler ASM
5:1	115-7766	1	Cap-Radiator
5:1:1	106-6755	1	Decal-Cap, Radiator
6	121-7853	1	Shroud-LH
7	133-4918	1	Shroud-RH
8	3234-1	4	Screw-HHF
9	92-2379	2	Clamp-Hose
10	3234-5	2	Screw-HHF
11	133-4919-0P	1	Bracket-Reservoir
12	95-8702-0P	1	Shield-Radiator, Lower
13	99-3497	1	Magnet
14	120-2193	1	Hose-Radiator, Upper
15	120-3353	1	Hose-Radiator, Lower
16	2412-34	2	Clamp-Hose
17	94-2636	1	Fitting ASM

Ref.	Part Number	Qty.	Description
17:1	237-81	1	O-Ring
18	109-0274	1	Hose-Fuel
19	108-0638	1	Bottle-Overflow
20	120-0627	1	Decal-Warning
21	104-8300	6	Nut-HF, NI
22	104-9459	2	Seal-Foam
23	340-8	1	Fitting-Straight
23:1	237-65	1	O-Ring
23:2	237-81	1	O-Ring
24	120-3531-0P	1	Bracket-Radiator, LH
25	120-3532-0P	1	Bracket-Radiator, RH
26	120-3530-0P	1	Bracket-Radiator, Bottom
27	120-3529-0P	1	Bracket-Radiator, Top
28	117-2382	2	Plug-Plastic
29	104-7201	4	Nut-HF, NI
30	3234-13	4	Screw-HHF
31	3256-22	4	Washer-Flat
32	125-6688	1	Decal-Danger, Starter Fluid
33	32144-10	2	Screw-HWH

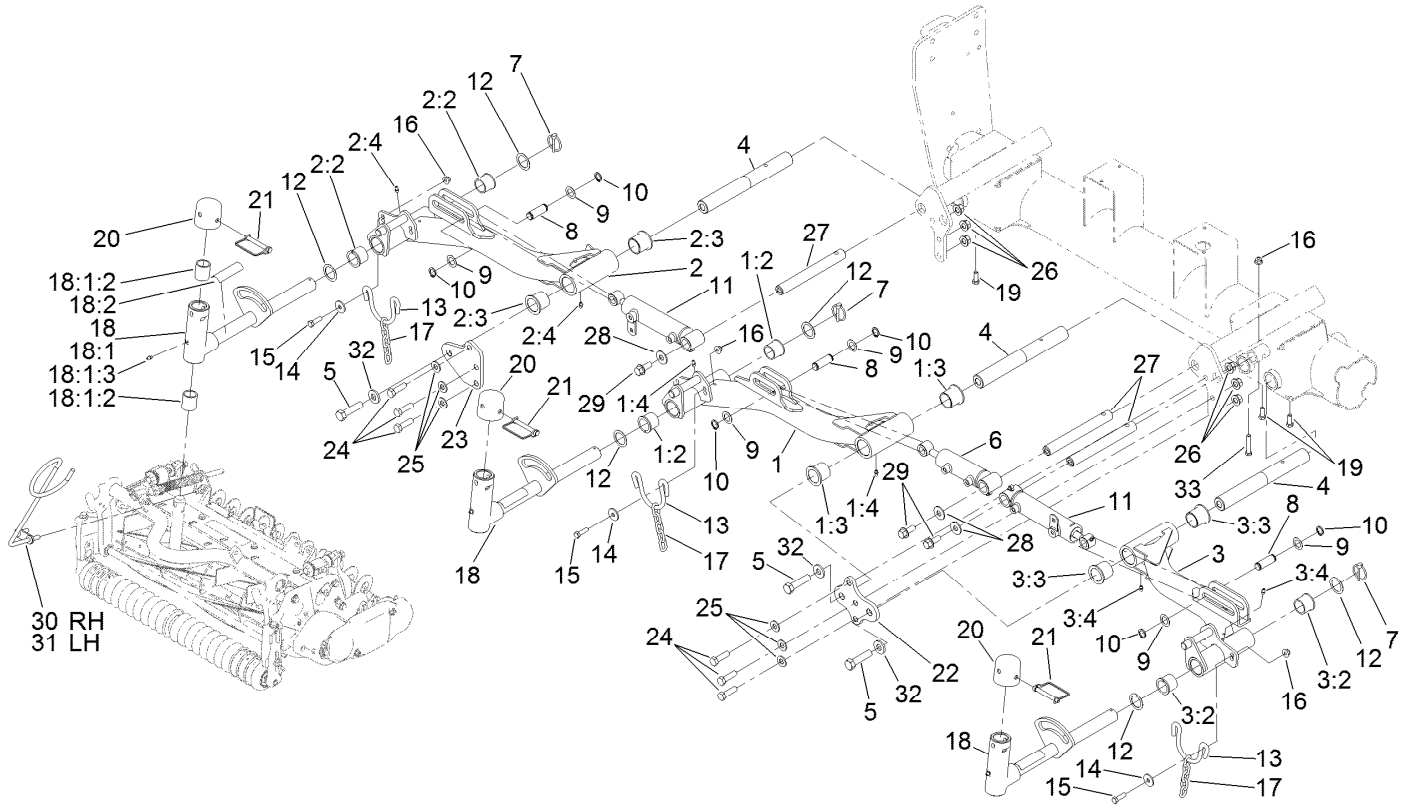

No. 1, No. 4 and No. 5 Lift Arm Assembly

Ref.	Part Number	Qty.	Description
1	110-0991	1	No. 1 Lift Arm ASM
1:2	69-6470	2	Bushing-Caster
1:3	104-0015	2	Bushing-Flange
1:4	302-5	2	Fitting-Grease
2	127-8519	1	No. 5 Lift Arm ASM
2:2	69-6470	2	Bushing-Caster
2:3	104-0015	2	Bushing-Flange
2:4	302-5	2	Fitting-Grease
3	114-8874	1	No. 4 Lift Arm ASM
3:2	69-6470	2	Bushing-Caster
3:3	104-0015	2	Bushing-Flange
3:4	302-5	2	Fitting-Grease
4	127-8494	3	Pin-Lift Arm
5	327-7	3	Screw-HH
6	119-6988	1	HYD Cylinder ASM
7	92-1298	3	Pin-Lynch
8	104-0046	3	Pin-Slide, Cylinder
9	3-6498	6	Washer-Thrust

Ref.	Part Number	Qty.	Description
10	32120-93	6	Ring-Retaining
11	119-6987	2	HYD Cylinder ASM
12	76-2980	6	Washer-Thrust
13	110-0922	3	Hoop-Chain
14	63-8410	6	Washer
15	323-7	6	Screw-HH
16	104-8301	9	Nut-HF, NI
17	84-2451	3	Chain-Straight, 5 Link
18	138-1248	3	Pivot Yoke ASM
18:1		1	Yoke-Pivot ●
18:1:2	121-3187	2	Bushing
18:1:3	302-5	1	Fitting-Grease
18:2	110-9642	1	Decal-Warning
19	323-6	3	Screw-HH
20	107-4027	3	Cap
21	107-7400	3	Pin-Lynch
22	127-8506-03	1	Plate-Bridge
23	127-8507-03	1	Plate-Bridge

● Not serviced separately

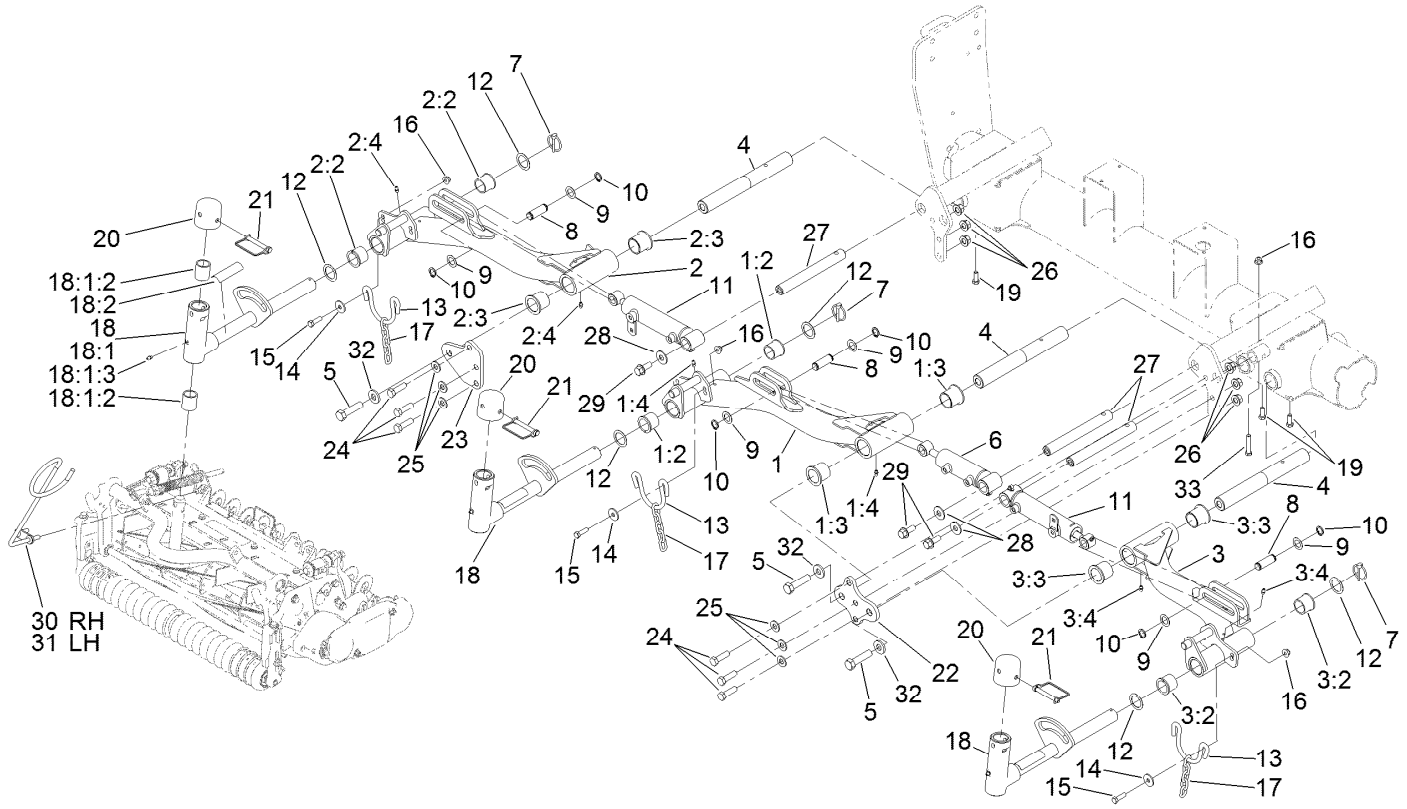

No. 1, No. 4 and No. 5 Lift Arm Assembly (continued)

Ref.	Part Number	Qty.	Description
24	325-7	6	Screw-HH
25	87-7270	6	Washer-Thrust
26	99-5107	6	Nut-Lock
27	117-0148	3	Pin-Cylinder
28	3256-6	3	Washer-Flat
29	3234-32	3	Screw-HHF
30	139-5995	1	Guide-Hose, RH
31	139-5996	1	Hose Guide ASM-LH
32	99-7667	3	Washer-Flat
33	323-10	3	Screw-HH

● Not serviced separately

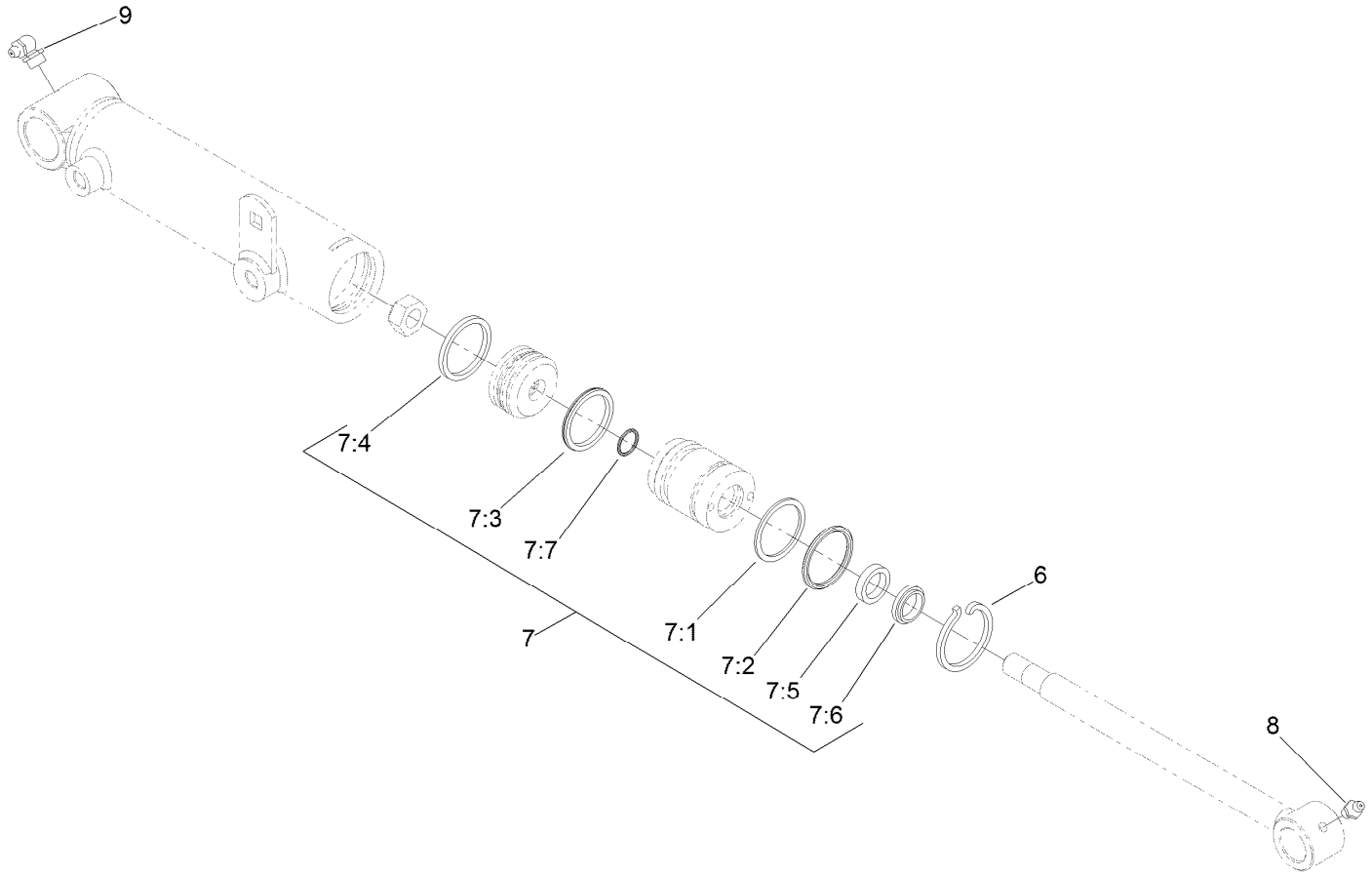

Hydraulic Cylinder Assembly No. 119-6987

Ref.	*Part Number*	*Qty.*	*Description*
6	84-1680	1	Ring-Retaining
7	133-2900	1	Seal Kit
7:1		1	O-Ring ●
7:2		1	Backup ●
7:3		1	Bp Seal ●
7:4		1	Wear Ring-Ht ●
7:5		1	Bt Seal ●
7:6		1	Dust Seal-Dt ●
7:7		1	O-Ring ●
8	302-5	1	Fitting-Grease
9	302-60	1	Fitting-Grease

● Not serviced separately

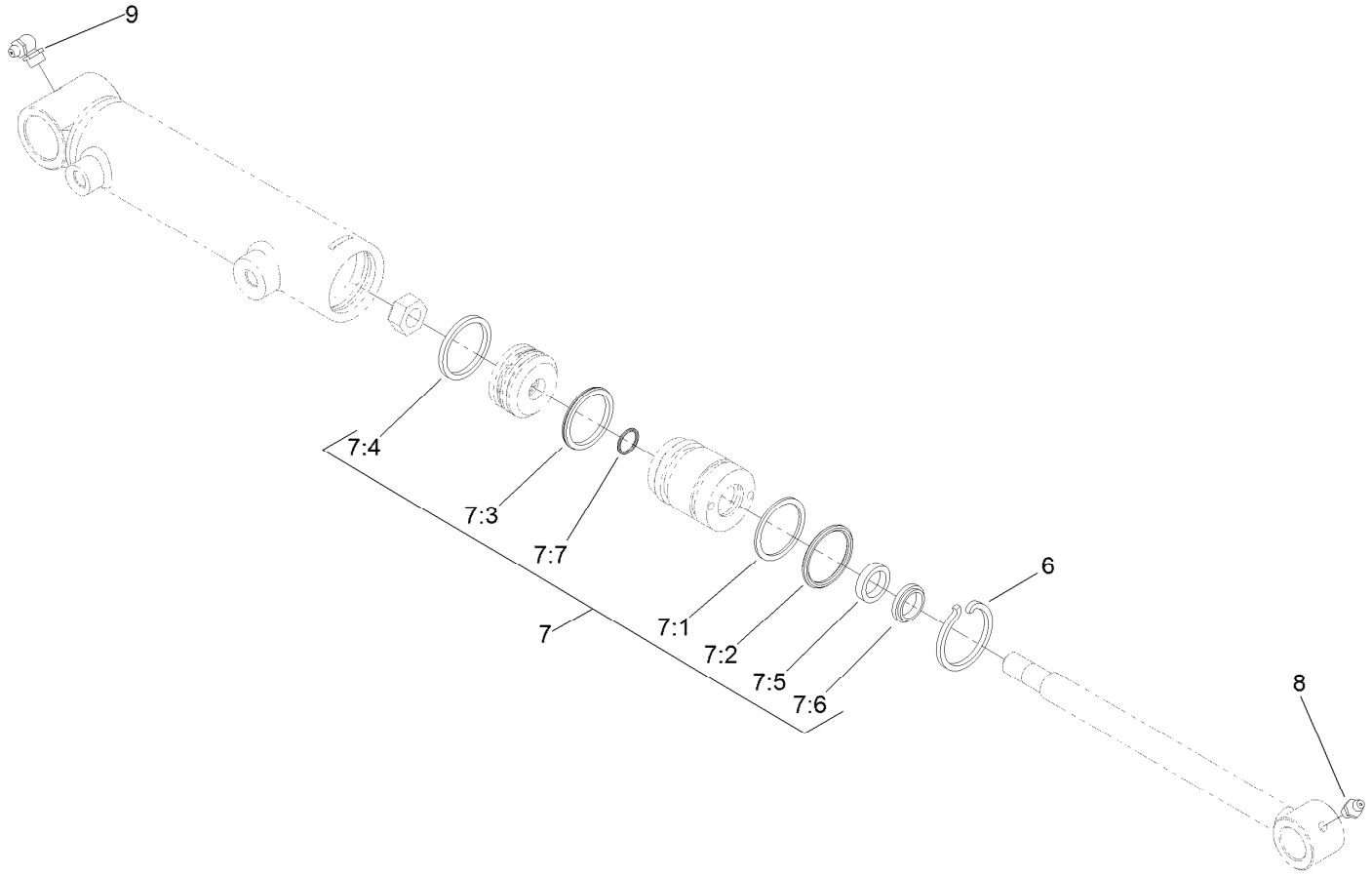

Hydraulic Cylinder Assembly No. 119-6988

Ref.	*Part Number*	*Qty.*	*Description*
6	84-1680	1	Ring-Retaining
7	133-2900	1	Seal Kit
7:1		1	O-Ring ●
7:2		1	Backup ●
7:3		1	Bp Seal ●
7:4		1	Wear Ring-Ht ●
7:5		1	Bt Seal ●
7:6		1	Dust Seal-Dt ●
7:7		1	O-Ring ●
8	302-5	1	Fitting-Grease
9	302-60	1	Fitting-Grease

● Not serviced separately

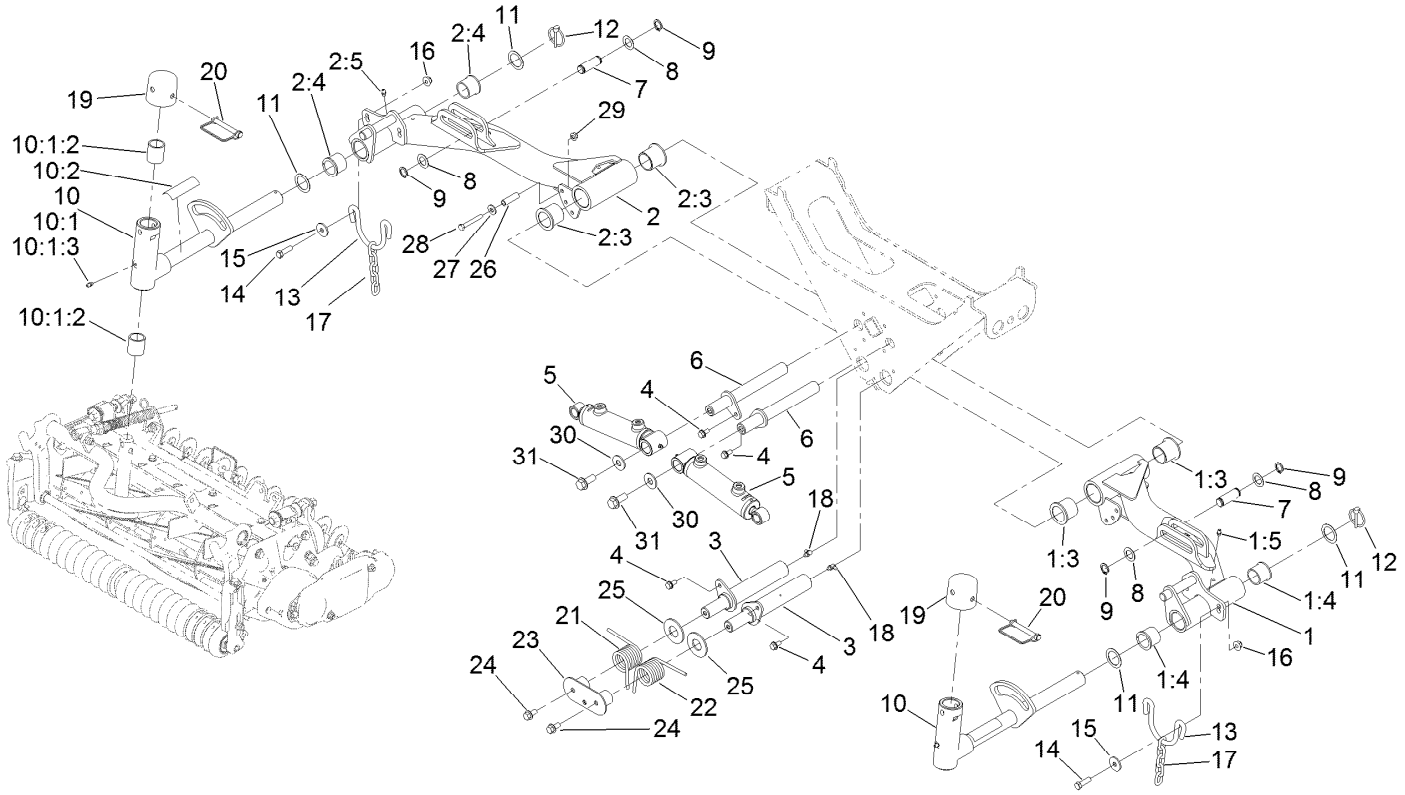

No. 2 and No. 3 Lift Arm Assembly

Ref.	Part Number	Qty.	Description
1	133-4946	1	No. 2 Lift Arm ASM
1:3	69-6470	2	Bushing-Caster
1:4	104-0015	2	Bushing-Flange
1:5	302-5	1	Fitting-Grease
2	133-4948	1	No. 3 Lift Arm ASM
2:3	69-6470	2	Bushing-Caster
2:4	104-0015	2	Bushing-Flange
2:5	302-5	1	Fitting-Grease
3	127-8504	2	Pin ASM
4	32144-14	4	Screw-HWHTF
5	138-6941	2	HYD CYL ASM
6	133-4931	2	Pin
7	104-0046	2	Pin-Slide, Cylinder
8	3-6498	4	Washer-Thrust
9	32120-93	4	Ring-Retaining
10	138-1248	2	Pivot Yoke ASM
10:1		1	Yoke-Pivot ●
10:1:2	121-3187	2	Bushing

Ref.	Part Number	Qty.	Description
10:1:3	302-5	1	Fitting-Grease
10:2	110-9642	1	Decal-Warning
11	76-2980	4	Washer-Thrust
12	92-1298	2	Pin-Lynch
13	110-0922	2	Hoop-Chain
14	323-7	4	Screw-HH
15	63-8410	4	Washer
16	104-8301	4	Nut-HF, NI
17	84-2451	2	Chain-Straight, 5 Link
18	302-60	4	Fitting-Grease
19	107-4027	2	Cap
20	107-7400	2	Pin-Lynch
21	127-8580	1	Spring-Torsion, RH
22	127-8581	1	Spring-Torsion, LH
23	139-6009-03	1	Catch ASM
24	3234-1	2	Screw-HHF
25	104-6126	2	Washer-Flat
26	107-0285	2	Spacer

● Not serviced separately

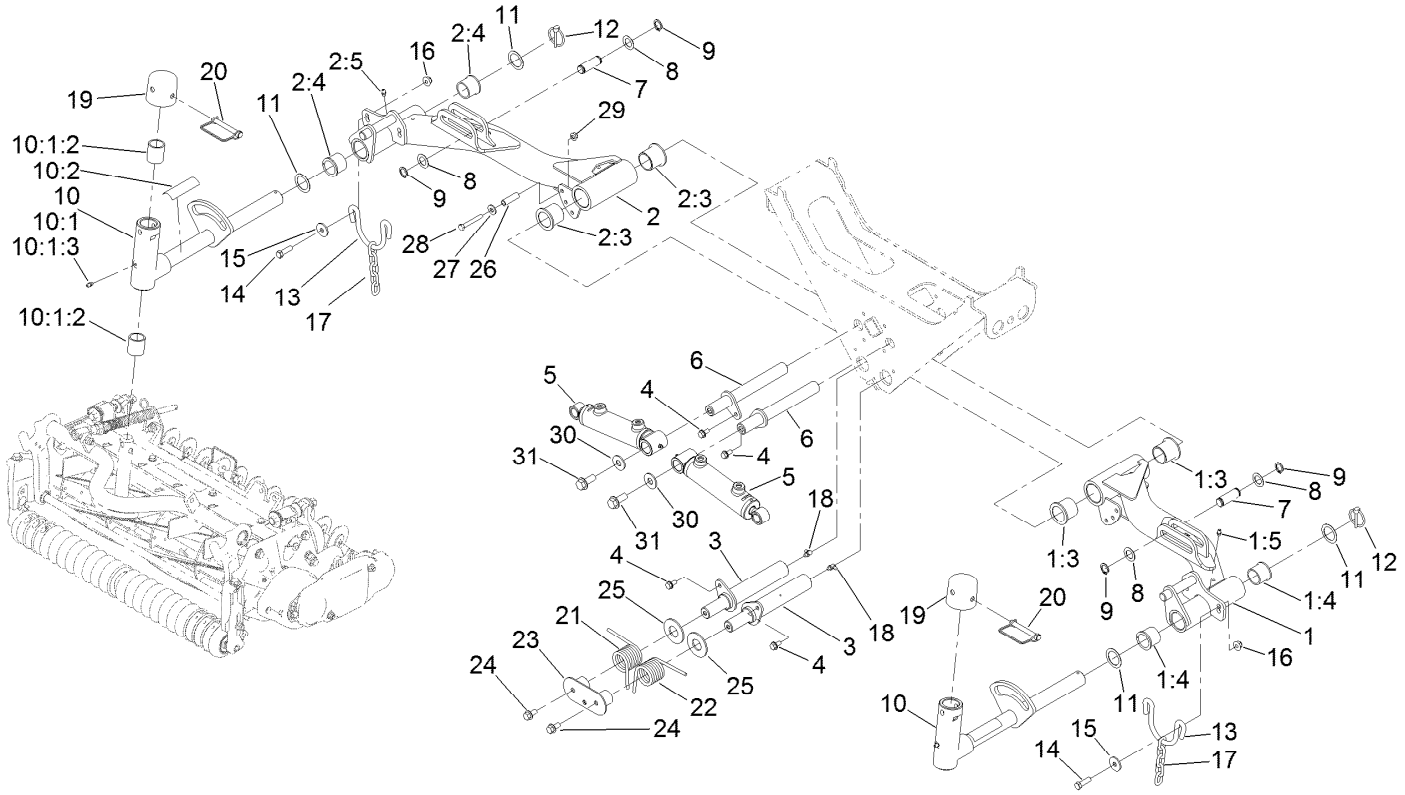

No. 2 and No. 3 Lift Arm Assembly (continued)

Ref.	Part Number	Qty.	Description
27	3256-3	2	Washer-Flat
28	322-11	2	Screw-HH
29	104-8300	2	Nut-HF, NI
30	3256-6	2	Washer-Flat
31	3234-38	2	Screw-HHF

● Not serviced separately

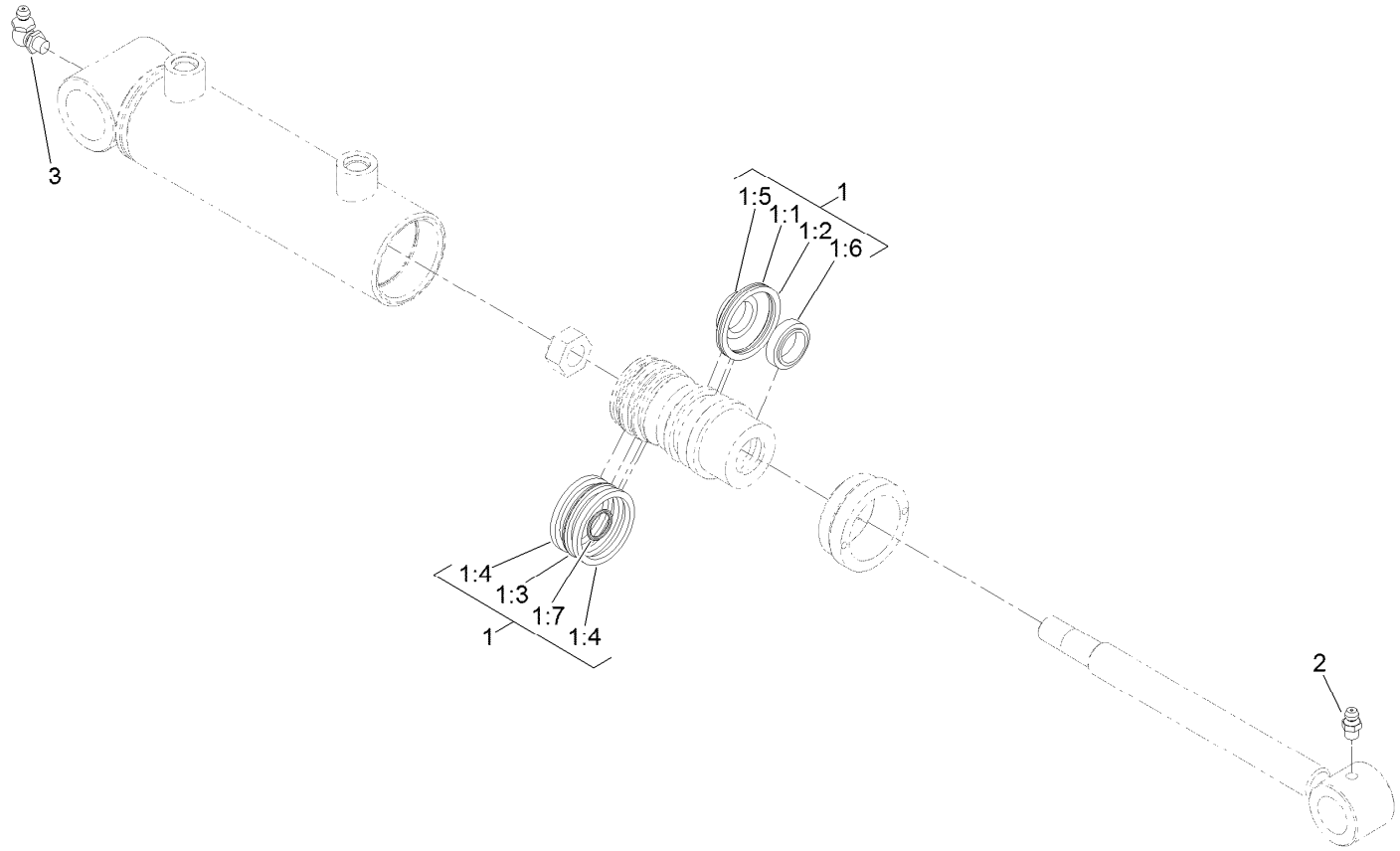

Hydraulic Cylinder Assembly No. 138-6941

Ref.	*Part Number*	*Qty.*	*Description*
1	127-8587	1	Seal Kit
1:1		1	O-Ring ●
1:2		1	Backup ●
1:3		1	Bp Seal ●
1:4		1	Wear Ring-Ht ●
1:5		1	Bt Seal ●
1:6		1	Dust Seal-Dt ●
1:7		1	O-Ring ●
2	302-5	1	Fitting-Grease
3	302-60	1	Fitting-Grease

● Not serviced separately

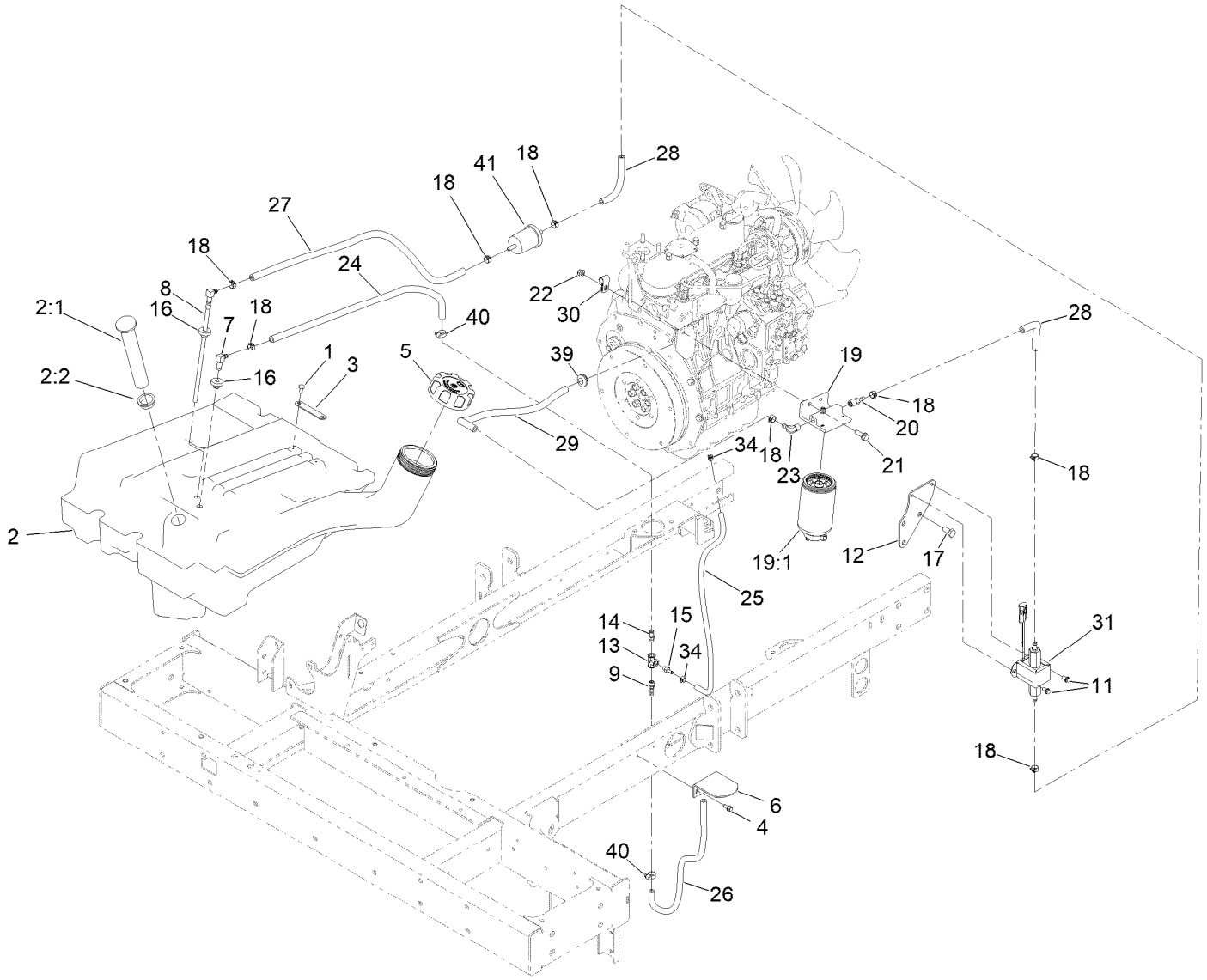

Fuel Tank and Filter Assembly

Ref.	Part Number	Qty.	Description
1	321-2	2	Screw-HH
2	95-8620	1	Tank-Fuel
2:1	95-8971	1	Gauge-Fuel
2:2	95-8972	1	Grommet
3	95-8881	1	Strap-Line, Fuel
4	32144-10	2	Screw-HWH
5	114-5064	1	Cap-Diesel
6	95-8968-03	1	Support-Tank, Fuel
7	46-6550	1	Fitting-Elbow, 90 DEG
8	110-9689	1	Pipe-Stand
9	304-73	1	Fitting-Straight
11	32144-4	2	Screw-HWH
12	136-3818-0P	1	Plate-Fuel Pump
13	354-20	1	Fitting-Tee
14	354-21	1	Fitting-Barbed
15	354-22	1	Fitting-Barbed
16	46-6560	2	Bushing
17	63-7790	3	Screw-Cap
18	92-2379	9	Clamp-Hose

Ref.	Part Number	Qty.	Description
19	110-9044	1	Separator-Filter
19:1	110-9049	1	Filter-Spin On, Fuel/Water
20	353-783	1	Fitting-STR
21	3234-17	2	Screw-HHF
22	104-8300	2	Nut-HF, NI
23	353-781	1	Fitting-HYD, 90
24	110-6187	1	Hose-Fuel
25	110-8751	1	Hose-Fuel
26	110-5701	1	Hose-Fuel
27	110-3257	1	Hose-Fuel
28	109-0310	2	Hose-Fuel
29	121-7852	1	Hose-Fuel
30	2412-10	1	Clamp-R
31	145-3160	1	Pump-Fuel, Electric
34	2412-80	2	Clamp-Hose
39	1-543296	1	Grommet
40	2412-108	2	Clamp-Worm
41	98-7612	1	Filter-Fuel

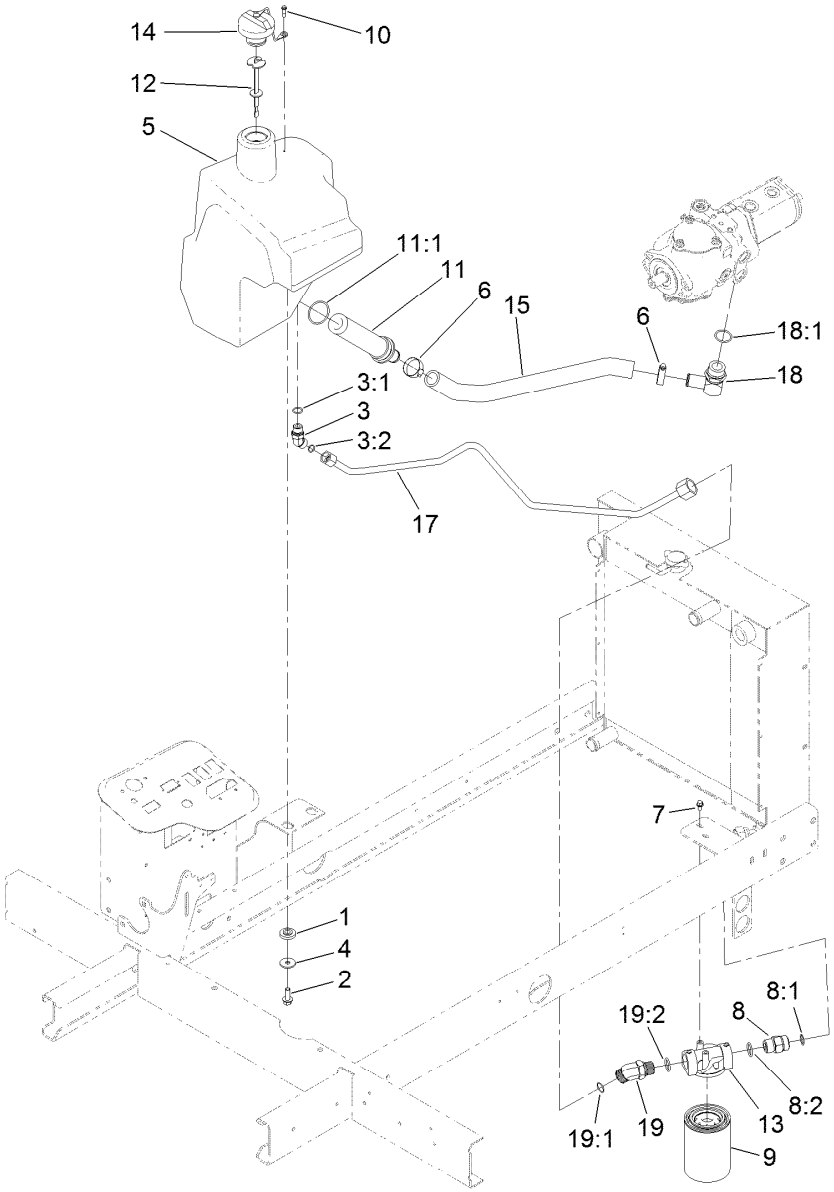

Hydraulic Tank and Filter Assembly

Ref.	Part Number	Qty.	Description
1	240-11	4	Bushing-Flange
2	3234-11	4	Screw-HHF
3	340-101	1	Fitting-HYD, 45 DEG
3:1	237-30	1	O-Ring
3:2	237-79	1	O-Ring
4	63-8410	4	Washer
5	104-4840	1	Tank-HYD
6	2412-34	2	Clamp-Hose
7	3234-13	2	Screw-HHF
8	340-9	1	Fitting-STR
8:1	237-58	1	O-Ring
8:2	237-81	1	O-Ring
9	86-3010	1	Filter-Oil

Ref.	Part Number	Qty.	Description
10	57-5420	1	Screw-Shoulder
11	104-7546	1	Tank Strainer ASM
11:1	340-136	1	O-Ring
12	119-6968	1	Dipstick-Oil
13	92-5821	1	Head-Filter
14	93-7160	1	Cap-Oil, HYD
15	121-7803	1	Hose-Suction
17	136-8044	1	Tube-Hydraulic
18	23-8910	1	Stem-Barb-90
18:1	237-146	1	O-Ring
19	100-5530	1	Fitting-45 DEG
19:1	237-58	1	O-Ring
19:2	237-81	1	O-Ring

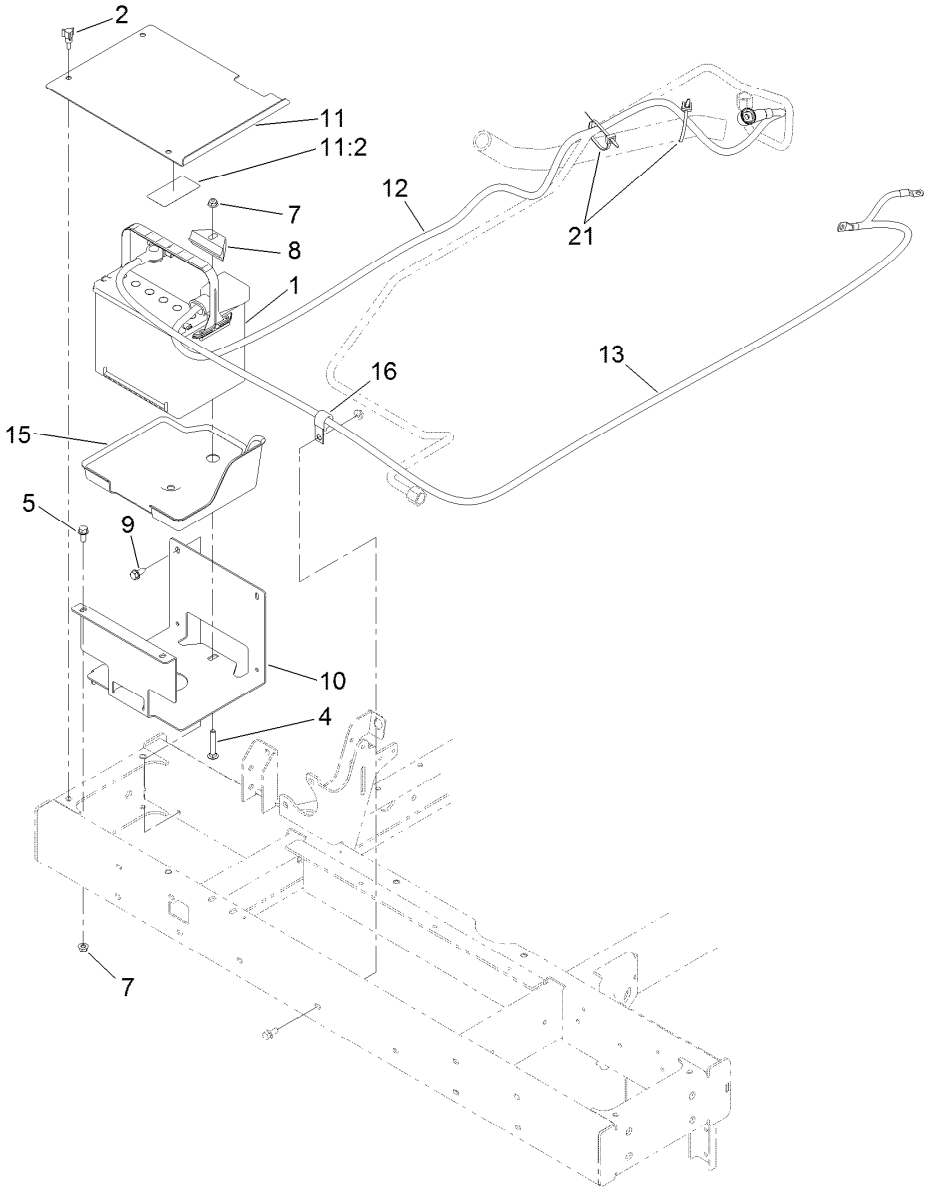

Battery Assembly

Ref.	Part Number	Qty.	Description
1	106-5187	1	Battery, 525 CCA W/O Electrolyte
2	233-70	3	Knob-Star, Three
4	3230-6	1	Bolt-CARR
5	3234-5	2	Screw-HHF
7	104-8300	3	Nut-HF, NI
8	138-6335	1	Retainer-Battery
9	32104-32	2	Screw-HWH
10	127-8527-03	1	Bracket-Battery
11	127-8531	1	Cover-Battery
11:2	93-7276	1	Decal-Danger
12	122-0812	1	Cable-Battery, Positive
13	122-0817	1	Battery-Cable, Negative
15	133-4913	1	Tray-Battery
16	94-9580	1	Clamp-J
21	3290-378	2	Tie-Cable

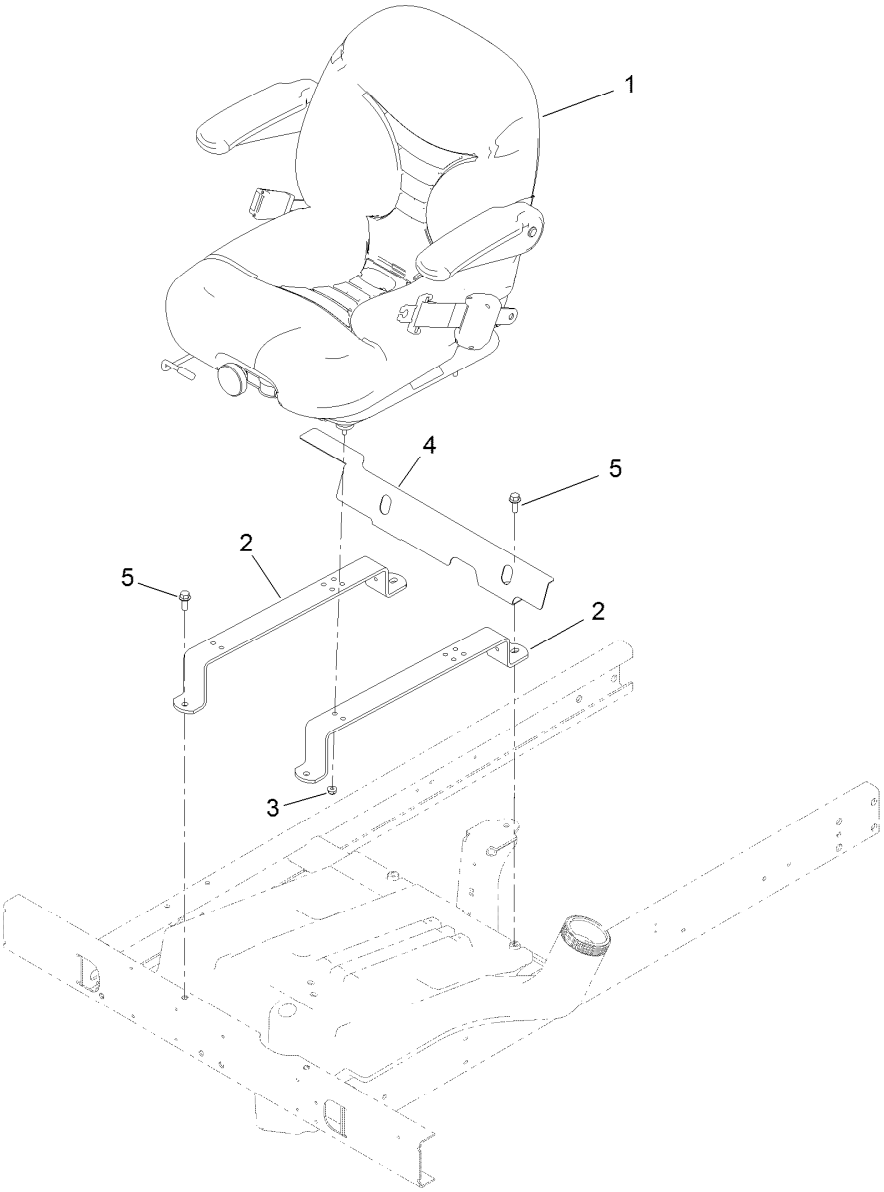

Seat and Heat-Shield Assembly

Ref.	*Part Number*	*Qty.*	*Description*
1	116-3998	1	Suspension Seat ASM
2	120-2120-03	2	Strap-Support, Seat
3	104-8300	4	Nut-HF, NI
4	104-4833-03	1	Shield-Heat
5	3234-11	4	Screw-HHF

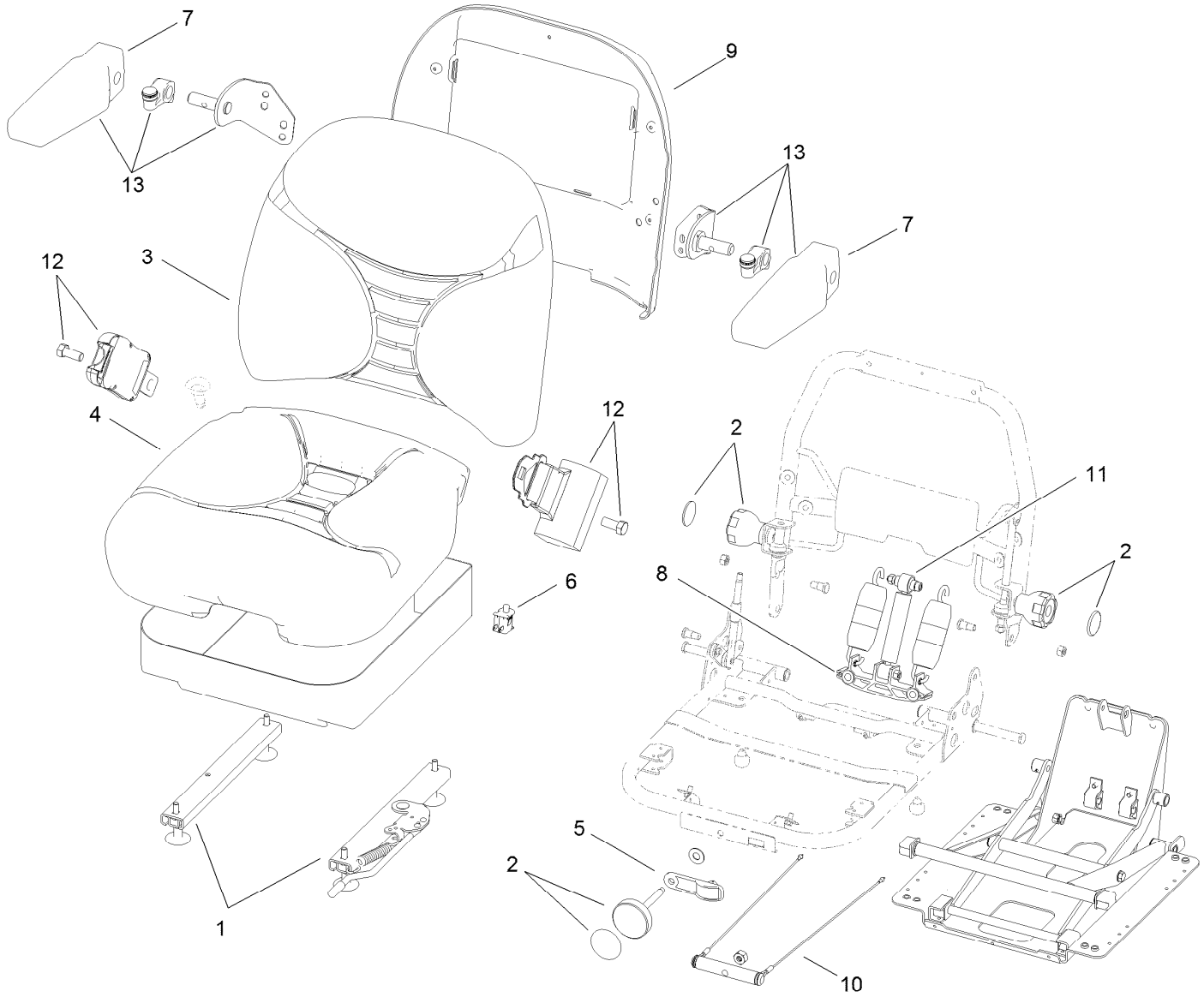

Seat Assembly No. 116-3998

Ref.	Part Number	Qty.	Description
1	116-0333	1	Seat Track Kit
2	107-1881	1	Knob Kit
3	107-1882	1	Back Cushion Kit
4	107-1883	1	Bottom Cushion Kit
5	107-1885	1	Weight Indicator Kit
6	82-2190	1	Switch-Bail
7	107-1887	1	Pad-Armrest
8	109-3343	1	Spring And Saddle Kit
9	109-3344	1	Back Panel Kit
10	109-3345	1	Weight Adjust Kit
11	116-0998	1	Shock Absorber Kit
12	110-0413	1	Seatbelt-Retractable
13	121-9415	1	Armrest Kit

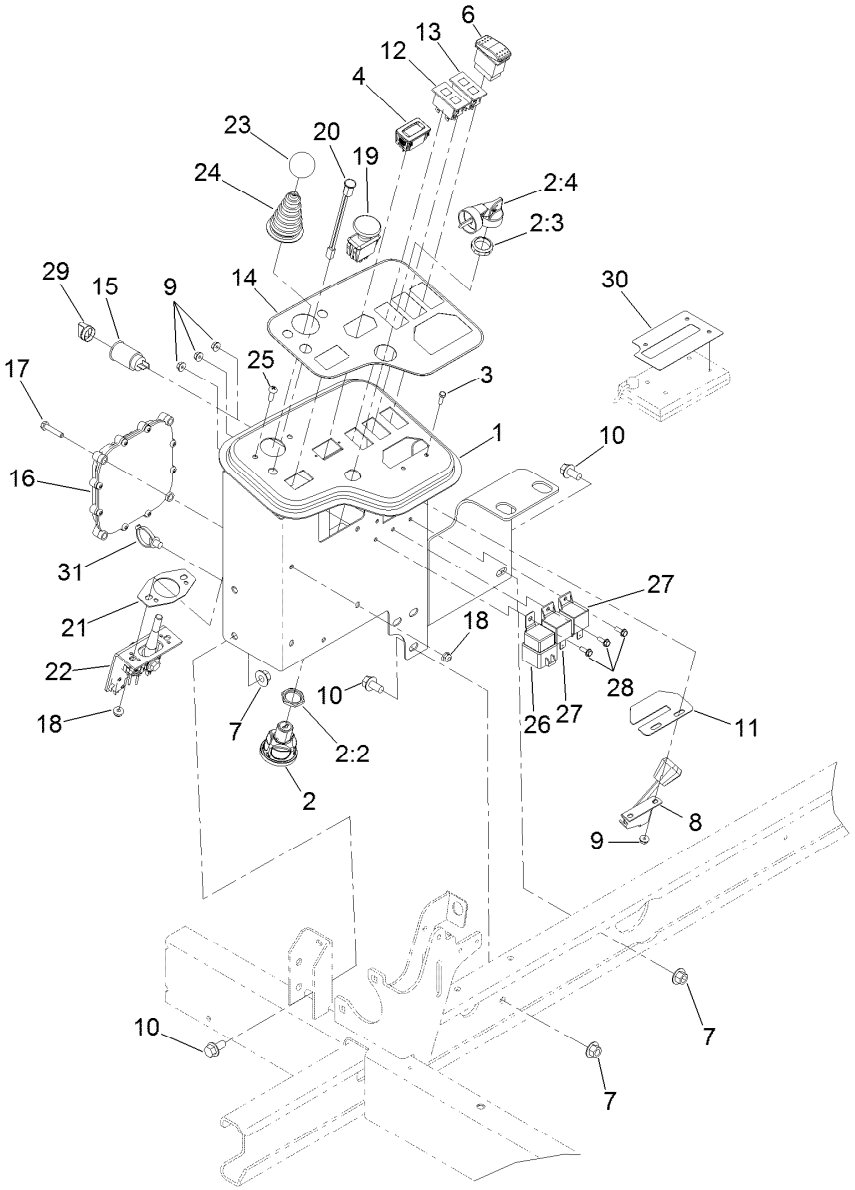

Control Panel Assembly

Ref.	Part Number	Qty.	Description
1	120-2051-03	1	Panel-Control
2	121-5159	1	Switch-Ignition
2:2	121-5160	1	Nut-Hex
2:3	121-5161	1	Nut-Face
2:4	121-5162	1	Set-Key, Ignition
3	3290-134	2	Screw
4	120-2244	1	Hourmeter
6	95-8999	1	Switch-Rocker, On-None-On
7	32128-43	5	Nut-Flange
8	138-1224	1	Cable-Throttle
9	3290-148	5	Nut-HF
10	3234-1	5	Screw-HHF
11	104-0421	1	Plate-Stop, Throttle
12	100-8070	1	Lamp-Warning
13	100-8071	1	Lamp-Warning
14	120-2105	1	Decal-Console
15	99-7411	1	Point-Power
16	115-1900	1	Controller
17	321-8	4	Screw-HH
18	104-7201	6	Nut-HF, NI
19	93-9999	1	Switch-PTO
20	95-7652	1	Light-Indicator
21	112-9181	1	Plate-Boot
22	120-5280	1	Bracket-Joystick
23	233-42	1	Knob
24	93-5961	1	Boot-Lever
25	3258-166	2	Screw-PRH
26	99-7430	1	Relay-Mini
27	99-7435	2	Relay
28	32105-23	3	Screw
29	99-7416	1	Cap
30	133-4914	1	Decal-Diagnostic Overlay
31	32180-030	1	Clip-Tie

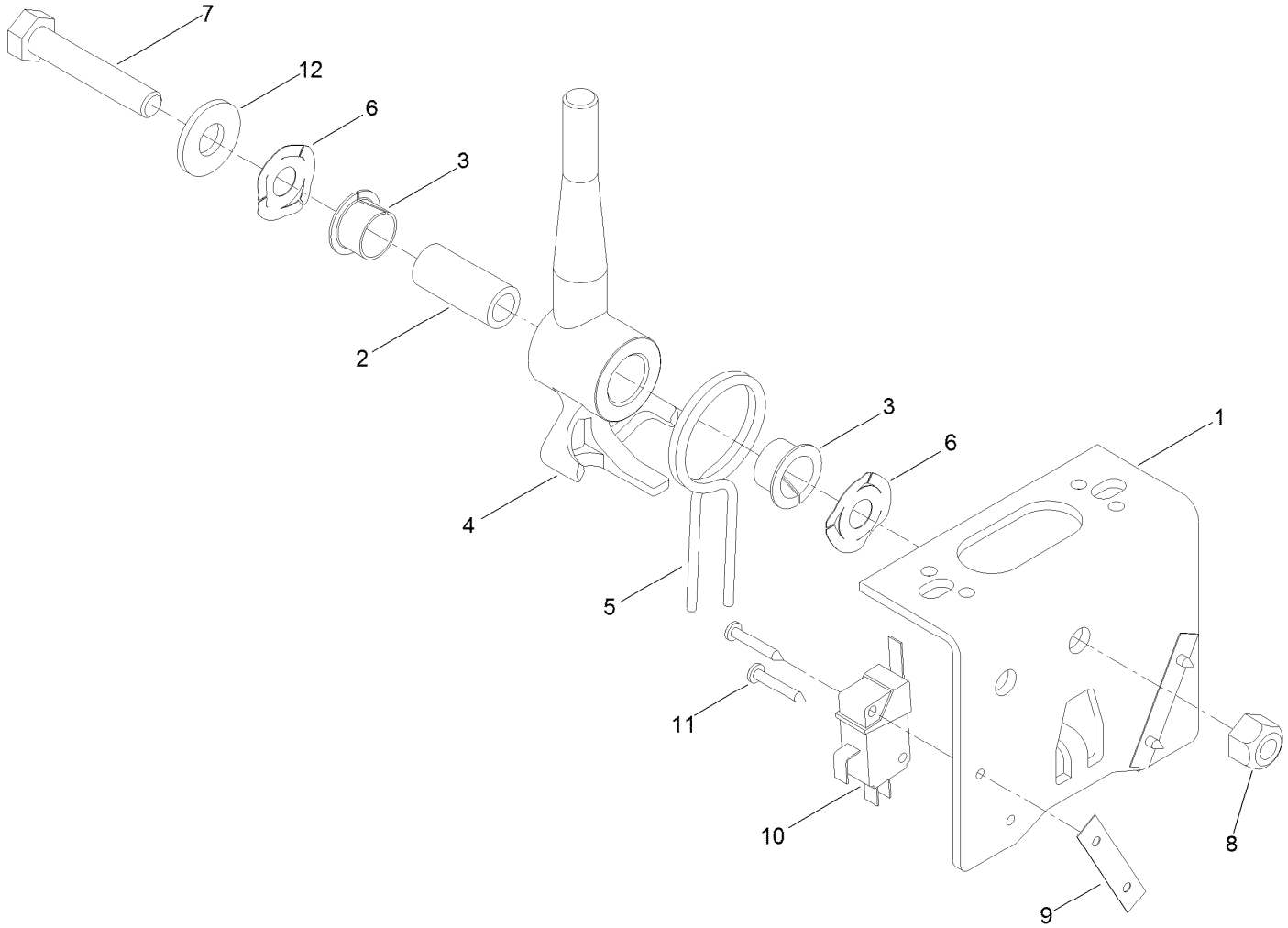

Joystick Bracket Assembly No. 120-5280

Ref.	*Part Number*	*Qty.*	*Description*
1	115-5357-03	1	Bracket-Joystick
2	106-4192	1	Spacer
3	93-5547	2	Bushing-Nylon
4	119-3540	1	Hub-Pivot, Joystick
5	105-8289	1	Spring-Torsion
6	106-4193	2	Washer-Finger, Spring
7	322-9	1	Screw-HH
8	3296-29	1	Nut-Lock, NI
9	3290-354	2	Nut-Speed
10	108-6496	2	Switch (W/Boot)
11	95-3003	4	Screw-PPHTF
12	3256-3	1	Washer-Flat

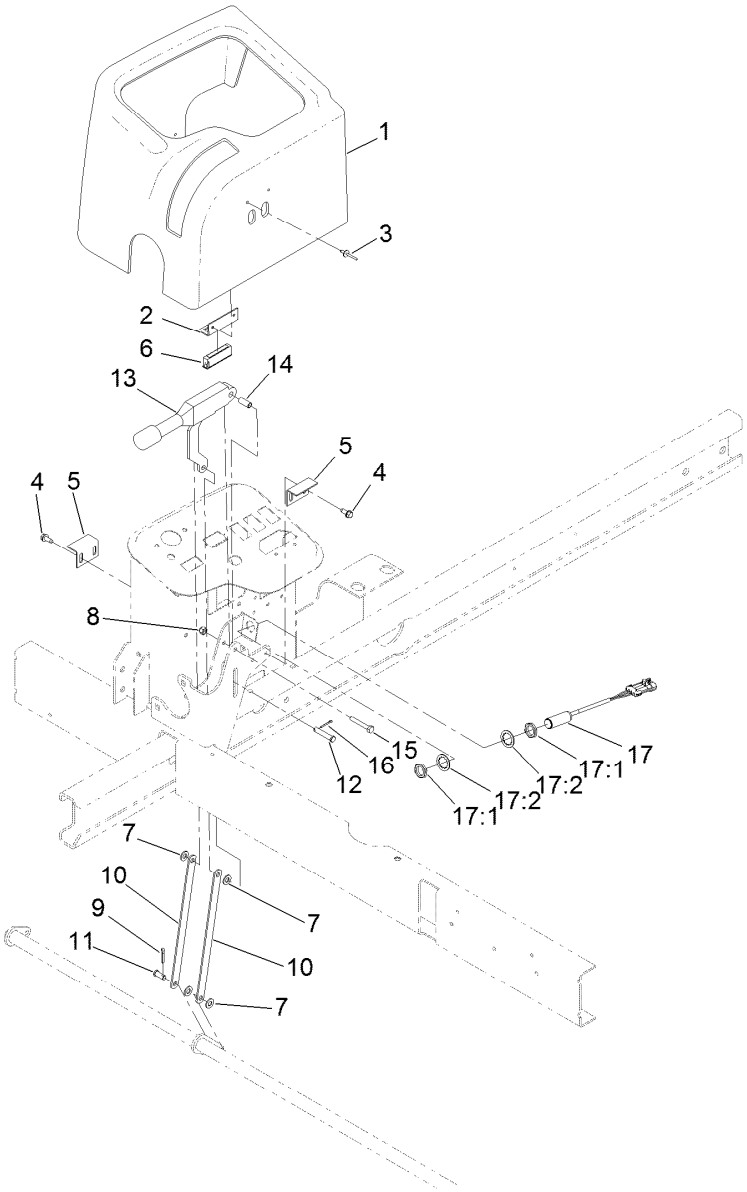

Parking Brake Assembly

Ref.	Part Number	Qty.	Description
1	120-2054	1	Cover-Plastic
2	95-8763	2	Bracket-Hold Down, Cover
3	3269-5	4	Rivet-Pop
4	32144-10	4	Screw-HWH
5	95-8765	2	Bracket-Strike, Magnet
6	58-4250	2	Catch-Magnetic
7	3256-23	4	Washer-Plain
8	3296-42	1	Nut-Lock, NI
9	3272-10	1	Pin-Cotter
10	104-4628	2	Link-Brake, Parking

Ref.	Part Number	Qty.	Description
11	283-62	1	Pin-Clevis
12	94-3829	1	Pin-Clevis
13	104-4817	1	Lever-Brake
14	87-4710	1	Spacer-Brake, Parking
15	321-10	1	Screw-HH
16	3272-6	1	Pin-Cotter
17	115-0282	1	Proximity Sensor ASM
17:1	117-3207	2	Nut-Hex
17:2	117-3208	2	Washer-Lock, Internal Tooth

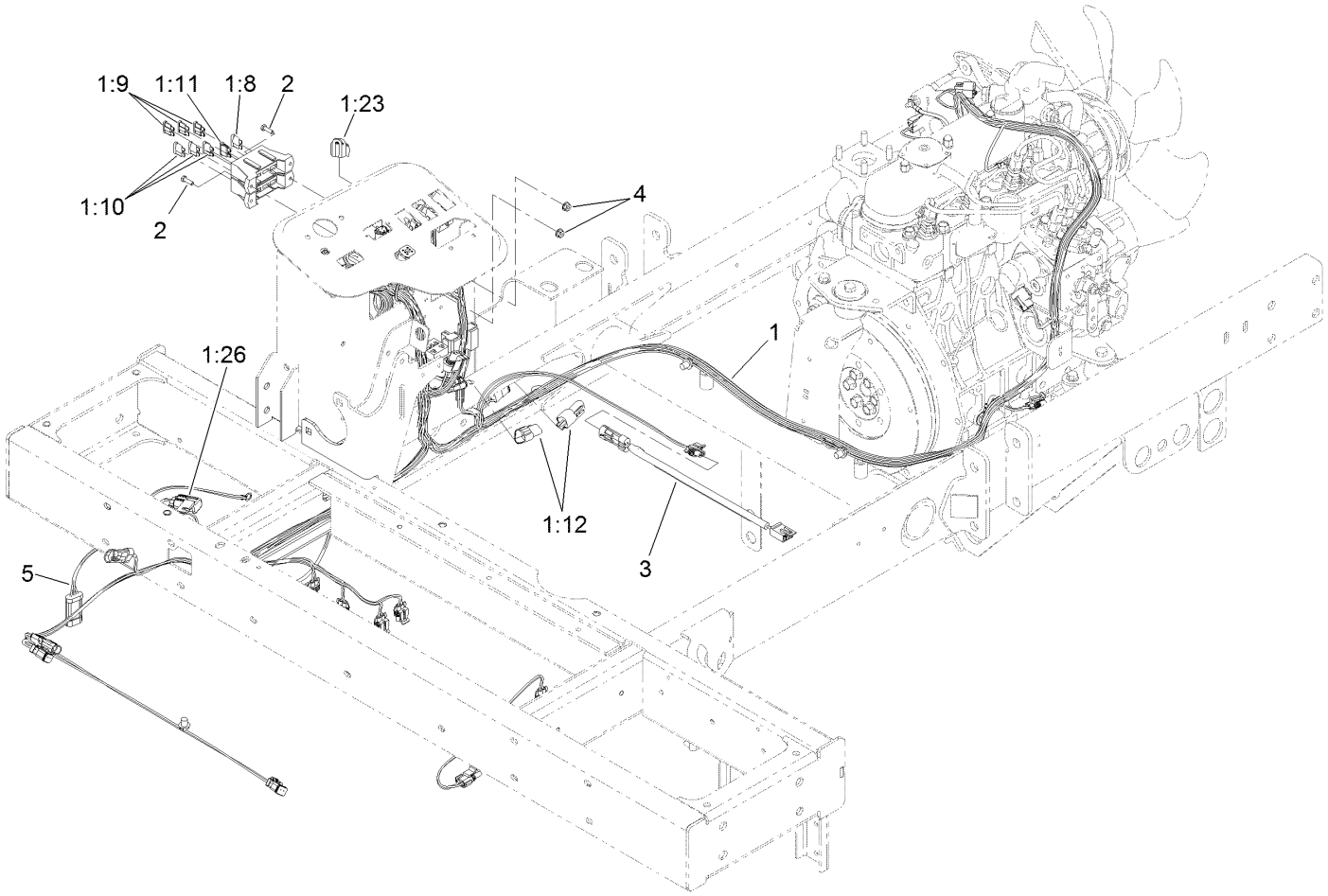

Main Wire Harness Assembly

Ref.	*Part Number*	*Qty.*	*Description*
1	122-1731	1	Harness-Wire, Main
1:8	94-6710	1	Fuse-2 Amp
1:9	114241	3	Fuse-Blade, 7.5 Amp
1:10	218-578	3	Fuse-Blade, 10 Amp
1:11	109355	1	Fuse-Blade, 15 Amp
1:12	32180-043	2	Resistor-120 Ohm
1:23	32180-089	1	Cap-Plug, 3 Way
1:26	32180-156	1	Cap-Plug, 6 Way
2	3290-134	2	Screw
3	108-8657	1	Harness-Wire, Seat
4	3290-148	2	Nut-HF
5	122-0715	1	Harness-Wire, 100In Turn-Around

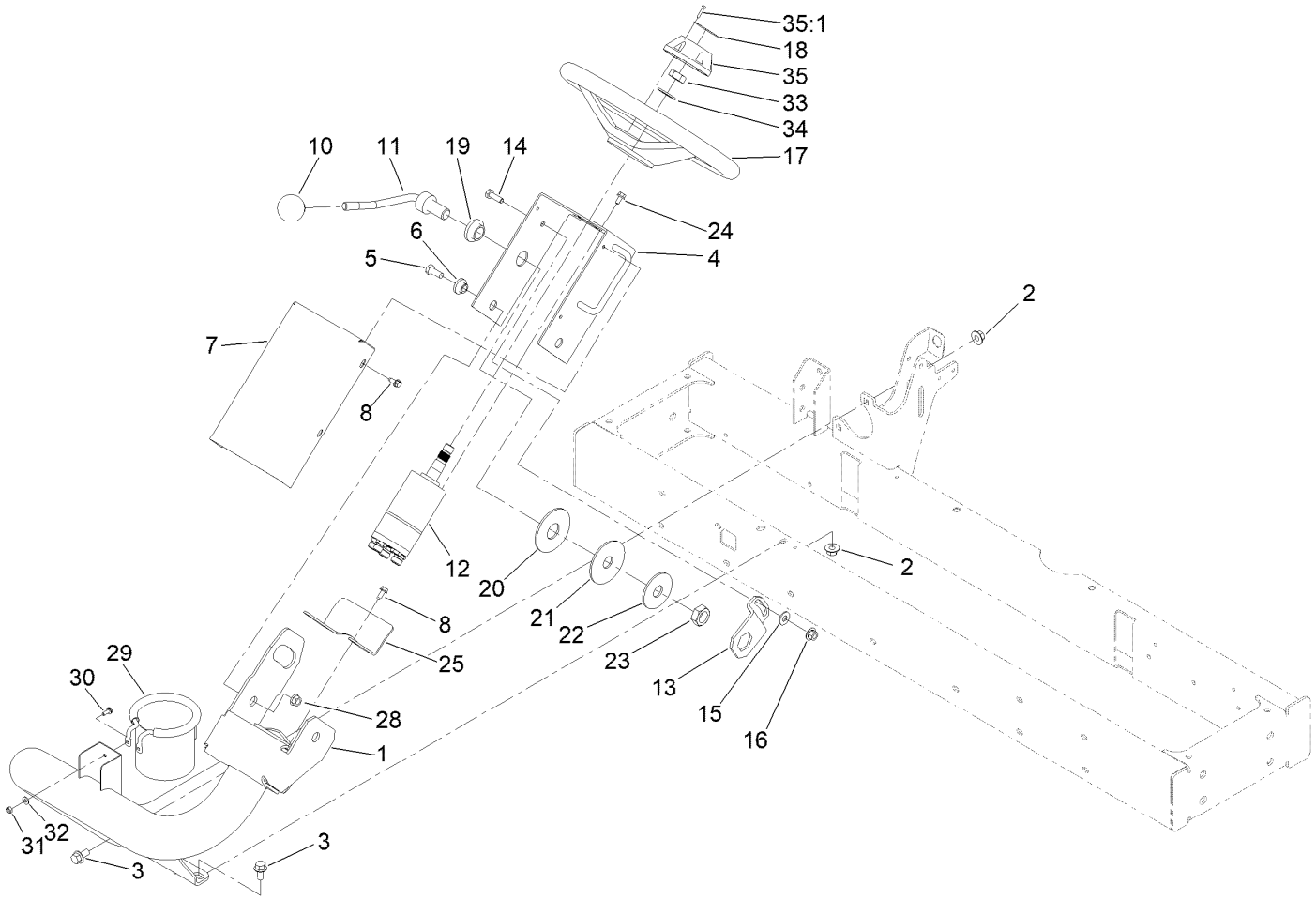

Steering Arm Assembly

Ref.	Part Number	Qty.	Description
1	120-2063-01	1	Arm-Steering
2	32128-43	4	Nut-Flange
3	3234-1	4	Screw-HHF
4	120-2190-01	1	Bracket-Valve
5	323-5	2	Screw-HH
6	93-5988	2	Hub-Pivot
7	95-8794-01	1	Cover-Valve, Steering
8	32144-10	5	Screw-HWH
10	233-48	1	Knob
11	95-8798-03	1	Lever-Steering
12	144-2099	1	Valve-Steering
13	80-2880	1	Bracket-Tilt
14	322-5	1	Screw-HH
15	3256-3	1	Washer-Flat
16	32128-44	1	Nut
17	145-0051	1	Steering Wheel
18	68-5370	1	Decal

Ref.	Part Number	Qty.	Description
19	99-3502	1	Boss
20	31-0390	1	Disc-Friction
21	82-9010	1	Disc-Friction
22	80-2930	1	Washer-Flat
23	3218-7	1	Nut-Jam
24	33103-012	4	Screw-HHF
25	99-3405-01	1	Shield-Steering
28	32128-21	2	Nut-HF Lock
29	117-2378	1	Holder-Bag
30	3290-321	2	Screw-HWH
31	3296-2	2	Nut-Lock, NI
32	3256-14	2	Washer-Flat
33	3296-33	1	Nut-Lock, NI
34	3256-27	1	Washer-Flat
35	68-5140	1	Cap-Wheel, Steering
35:1	32144-21	1	Screw

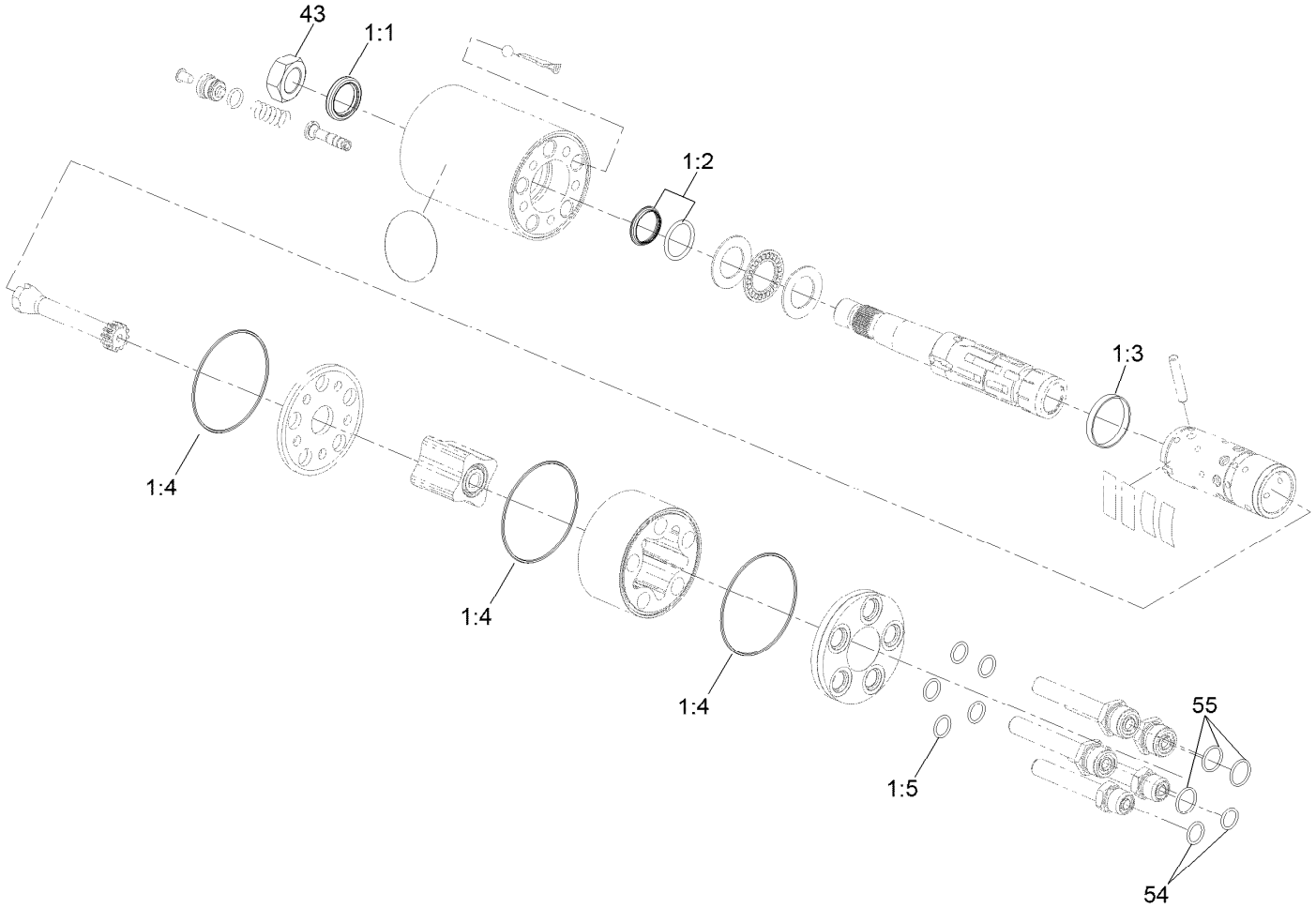

Steering Valve Assembly No. 144-2099

Ref.	Part Number	Qty.	Description
1	106-6716	1	Seal Kit ●
1:1		1	Ring-Seal, Dust ■
1:2		1	Seal-Shaft ■
1:3		1	O-Ring ■
1:4		2	O-Ring ■
1:5		5	O-Ring ■
43	3296-33	1	Nut-Lock, NI
54	237-21	2	O-Ring
55	237-22	3	O-Ring

● Not illustrated

■ Not serviced separately

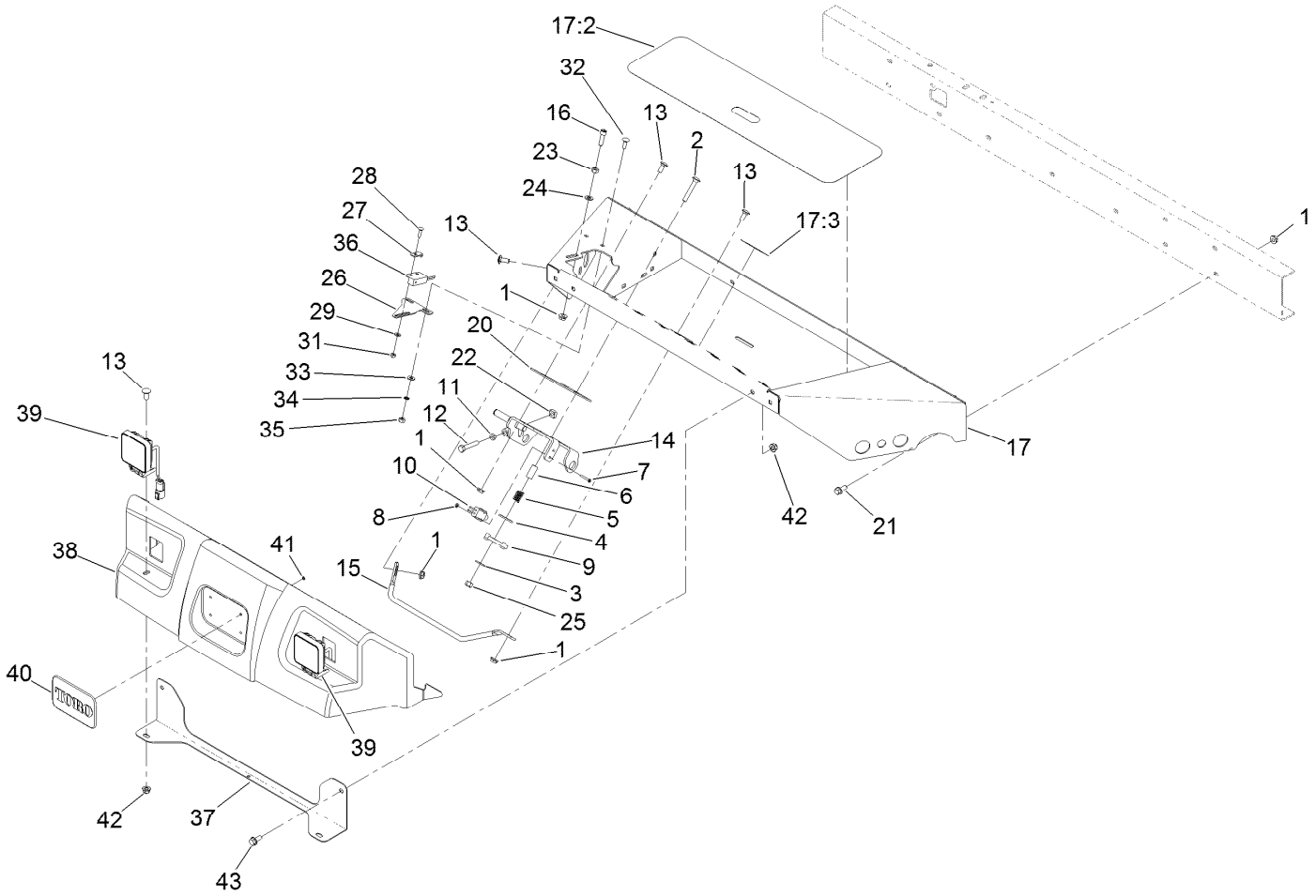

Front Shroud and Floorplate Assembly

Ref.	Part Number	Qty.	Description
1	32128-20	15	Nut-HF
2	3230-6	1	Bolt-CARR
3	3256-3	1	Washer-Flat
4	3256-40	1	Washer-Flat
5	65-9940	1	Spring
6	95-8866	1	Tube-Arm, Rocker
7	32105-9	2	Screw-HH
8	3296-9	2	Nut-Hex
9	99-3593	1	Arm-Rocker
10	95-8900	1	Switch
11	3218-2	1	Nut-Hex Jam
12	322-41	1	Bolt-Hex,TAP
13	3230-23	6	Bolt-CARR
14	95-8869-0P	1	Bracket-Pedal, Traction
15	95-8893	1	Bar-Deflector
16	3274-22	1	Screw-HSH
17	120-2189	1	Floorplate ASM
17:2	99-3478	1	Tread-Foot
17:3	99-3444	1	Decal-Mow / Transport
20	106-2661-0P	1	Plate-Support
21	3234-5	10	Screw-HHF

Ref.	Part Number	Qty.	Description
22	99-3565	1	Nut-Square
23	3217-6	1	Nut-Hex
24	3256-23	1	Washer-Plain
25	3296-29	1	Nut-Lock, NI
26	100-4871	1	Bracket-Switch, Neutral
27	100-4872	1	Plate-Switch, Neutral
28	3229-20	1	Screw-CARR
29	3256-14	1	Washer-Flat
31	3296-2	1	Nut-Lock, NI
32	3229-1	2	Screw-CARR
33	3256-22	2	Washer-Flat
34	3255-7	2	Washer-Lock/EXT
35	3217-5	2	Nut-Hex
36	100-1270	1	Switch-Proximity
37	121-7822-03	1	Bracket-Head Light
38	121-7823	1	Shroud-Front
39	140-6990	2	Light-Work, LED
40	93-6028	1	Plate-Logo
41	3254-9	4	Washer-Lock, Internal
42	104-8300	4	Nut-HF, NI
43	3234-47	2	Screw-HHF

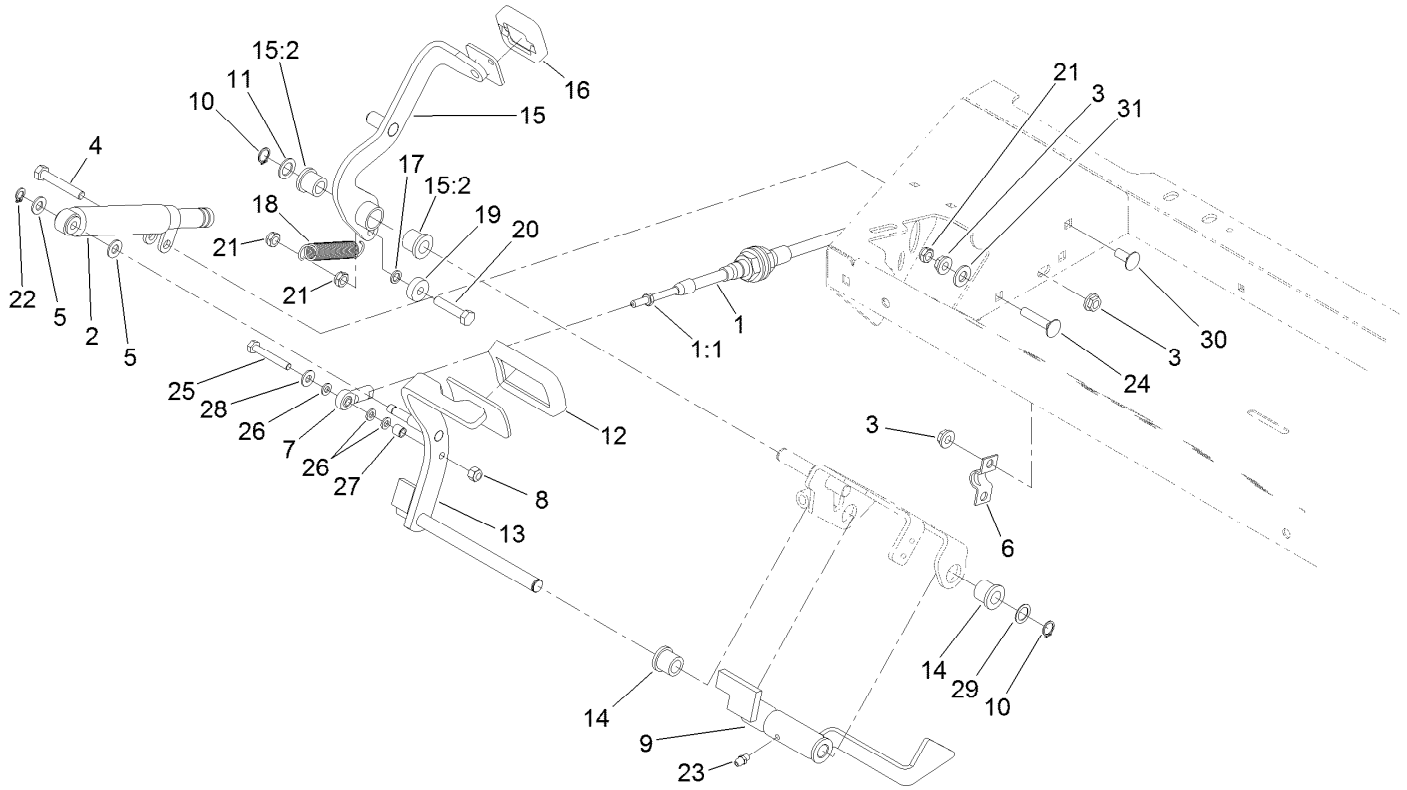

Traction Control Assembly

Ref.	Part Number	Qty.	Description
1	100-4815	1	Cable-Control, Traction
1:1	3220-1	2	Nut-Jam
2	140-6248	1	Damper
3	32128-20	5	Nut-HF
4	322-10	1	Screw-HH
5	3256-23	2	Washer-Plain
6	93-2092	1	Clamp-Cable
7	2411-41	1	Rod End-Ball Joint
8	3296-42	1	Nut-Lock, NI
9	95-8861	1	Slide
10	32151-84	2	Ring-Shaft, EXT
11	41-8440	1	Washer
12	74-9100	1	Pad-Pedal, Forward
13	104-4852-03	1	Pedal-Traction
14	256-243	2	Bearing-Flange
15	99-3379	1	Pedal-Reverse ASM
15:2	256-243	2	Bearing-Flange

Ref.	Part Number	Qty.	Description
16	74-9110	1	Pad-Pedal, Reverse
17	75-5470	1	Spacer-Bearing
18	99-3476	1	Spring-Extension
19	251-259	1	Bearing-Ball
20	322-7	1	Screw-HH
21	3296-47	3	Nut-Lock,NI
22	32151-3	1	Ring-Grip
23	302-5	1	Fitting-Grease
24	3230-27	1	Screw-CARR
25	321-10	1	Screw-HH
26	33093-00	3	Washer-Flat
27	99-3545	1	Spacer
28	3256-22	1	Washer-Flat
29	73-0040	4	Washer-Thrust
30	3230-23	2	Bolt-CARR
31	3256-24	1	Washer-Plain

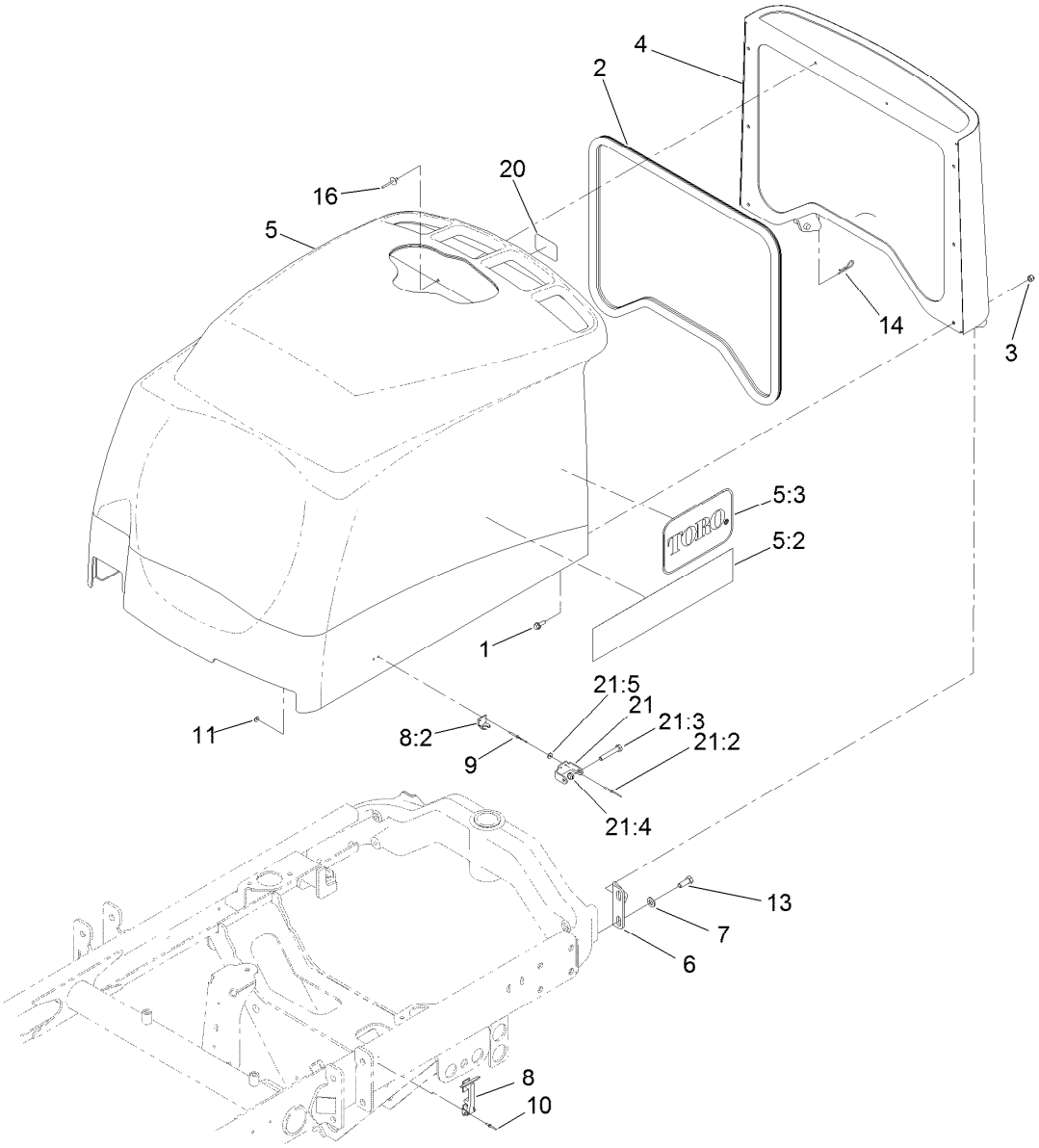

Hood and Screen Assembly

Ref.	Part Number	Qty.	Description
1	3234-4	6	Screw-HHF
2	100-4932	1	Trim-Seal
3	3296-42	6	Nut-Lock, NI
4	104-4853-03	1	Screen-Hood
5	127-8599	1	Hood ASM
5:2	127-8597	2	Decal-Hood
5:3	62-7400	2	Decal-Toro Logo
6	95-8728	2	Bracket-Pivot, Hood
7	3256-24	8	Washer-Plain
8	59-9740	2	Flex Draw Latch ASM
8:2	249-40	1	Keeper
9	107-0333	4	Rivet-Pop

Ref.	Part Number	Qty.	Description
10	3290-55	4	Rivet-Pop
11	3269-10	4	Washer-Back
13	323-6	4	Screw-HH
14	3290-467	1	Pin-Hair
16	3269-21	2	Rivet-Pop
20	110-7135	1	Decal-Toro
21	119-2004	1	CE Latch Kit
21:2	107-0333	2	Rivet-Pop
21:3	322-10	1	Screw-HH
21:4	3296-47	1	Nut-Lock,NI
21:5	3269-10	2	Washer-Back

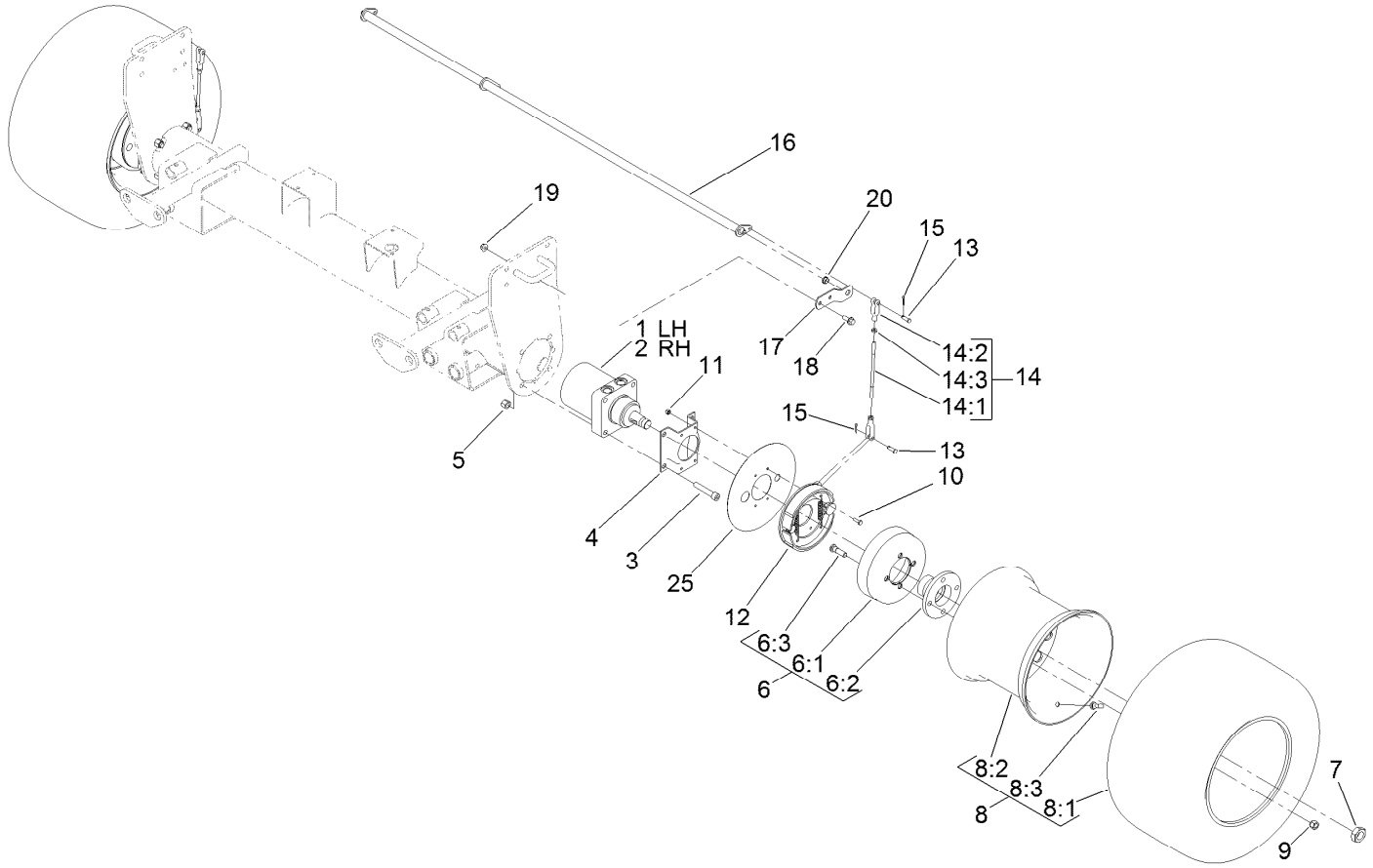

Wheel and Brake Assembly

Ref.	Part Number	Qty.	Description
1	110-8785	1	HYD Motor ASM (CCW)
2	110-8786	1	HYD Motor ASM (CW)
3	3274-93	8	Screw-HSH
4	84-2000-0P	2	Bracket-Brake
5	3296-23	8	Nut-Lock, NI
6	127-8568	2	Hub ASM
6:1	127-8536	1	Brake Drum
6:2	93-6838-03	1	Hub-Wheel
6:3	85-6540	4	Stud-Drive
7	26-3790	2	Nut-Lock
8		2	Tire ASM ●
8:1	120-2114	1	Tire-Smooth
8:2	120-2115	1	Wheel-12 Inch
8:3	232-27	1	Stem-Valve
9	242-50	8	Nut-Lug

Ref.	Part Number	Qty.	Description
10	321-5	8	Screw-HH
11	3296-42	8	Nut-Lock, NI
12	127-8535	2	Brake ASM
13	283-1	4	Pin-Clevis
14	127-8455	2	Brake Lever ASM
14:1	127-8456	1	Rod-Brake
14:2	1-303105	2	Yoke-Adjustable
14:3	3220-2	2	Nut-Jam
15	3272-10	4	Pin-Cotter
16	127-8434-03	1	Shaft-Pivot, Brake
17	95-8683	2	Bracket-Pivot, Brake
18	3234-11	4	Screw-HHF
19	104-8301	4	Nut-HF, NI
20	256-156	2	Bushing-Flange
25	136-8006-0P	2	Shield-Wheel Rim

● Not serviced separately

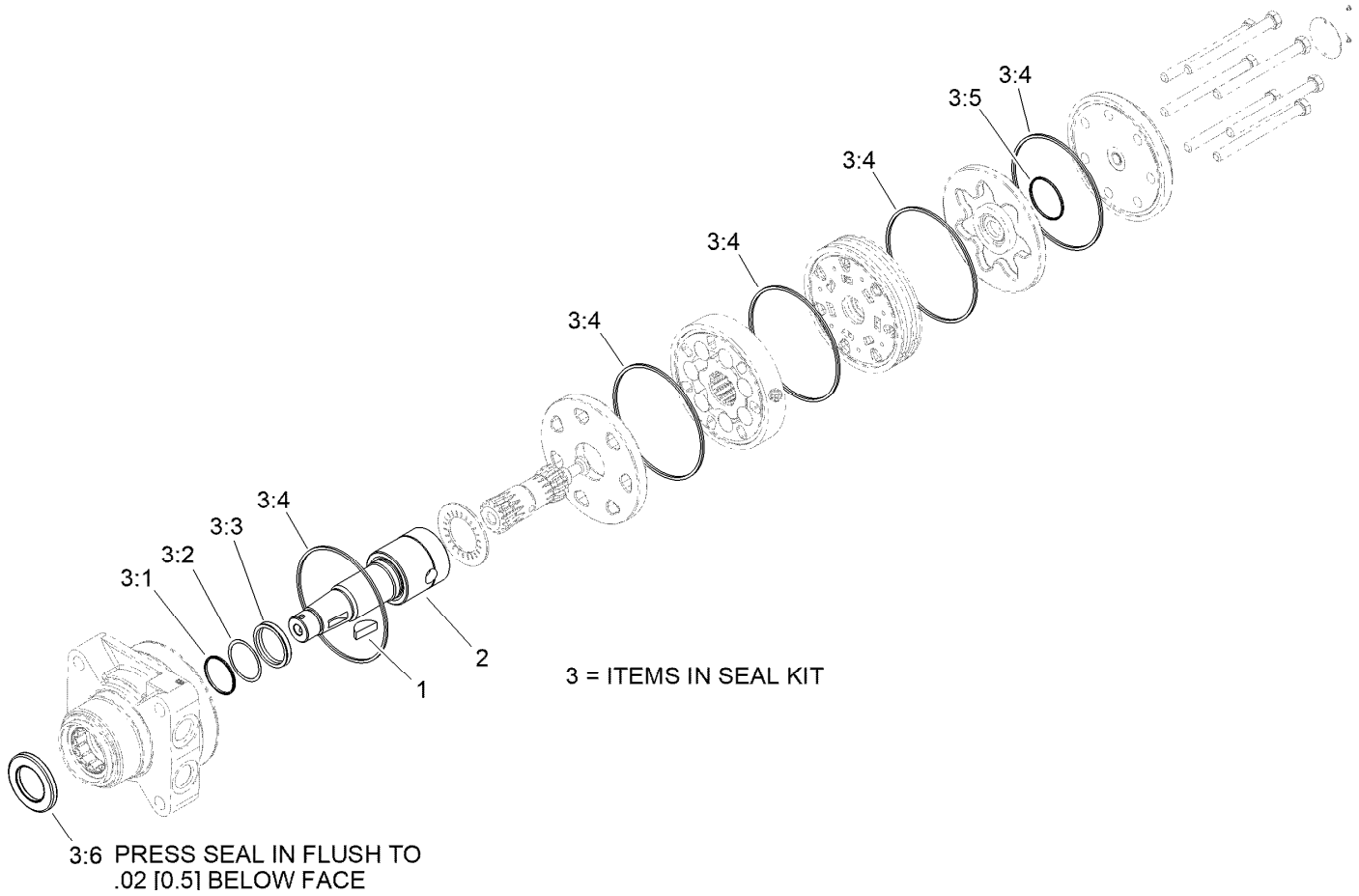

Hydraulic Motor Assembly No. 110-8786

Ref.	*Part Number*	*Qty.*	*Description*
1	3257-42	1	Key-Woodruff
2	99-3090	1	Shaft-Coupling
3	100-6131	1	Seal Kit
3:1		1	Ring-Back Up ●
3:2		1	Washer-Back Up ●
3:3		1	Seal-Shaft ●
3:4		5	Seal-Ring ●
3:5		1	Seal-Commutator ●
3:6		1	Seal-Dirt And Water ●

● Not serviced separately

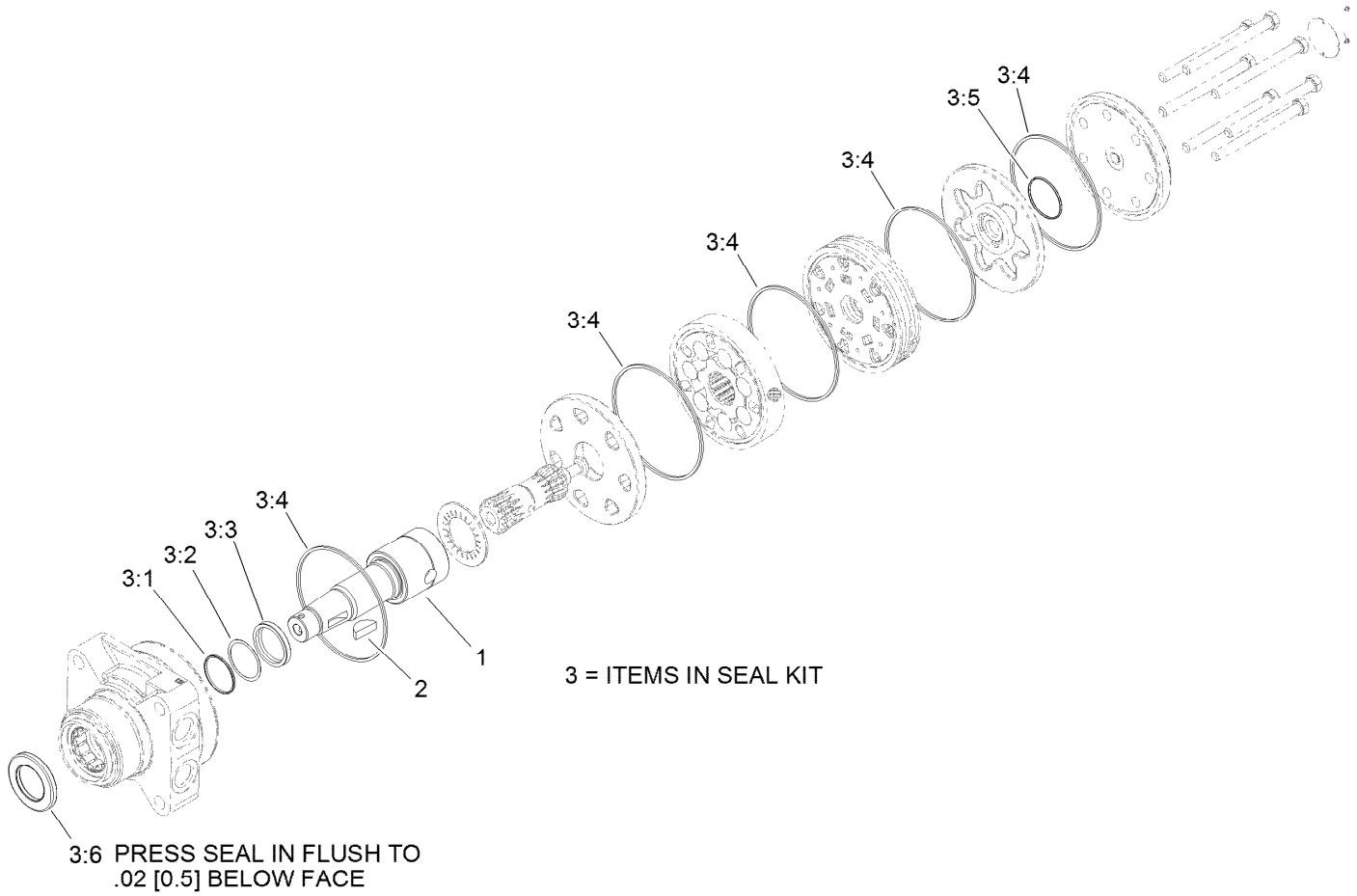

Hydraulic Motor Assembly No. 110-8785

Ref.	*Part Number*	*Qty.*	*Description*
1	3257-42	1	Key-Woodruff
2	99-3090	1	Shaft-Coupling
3	100-6131	1	Seal Kit
3:1		1	Ring-Back Up ●
3:2		1	Washer-Back Up ●
3:3		1	Seal-Shaft ●
3:4		5	Seal-Ring ●
3:5		1	Seal-Commutator ●
3:6		1	Seal-Dirt And Water ●

● Not serviced separately

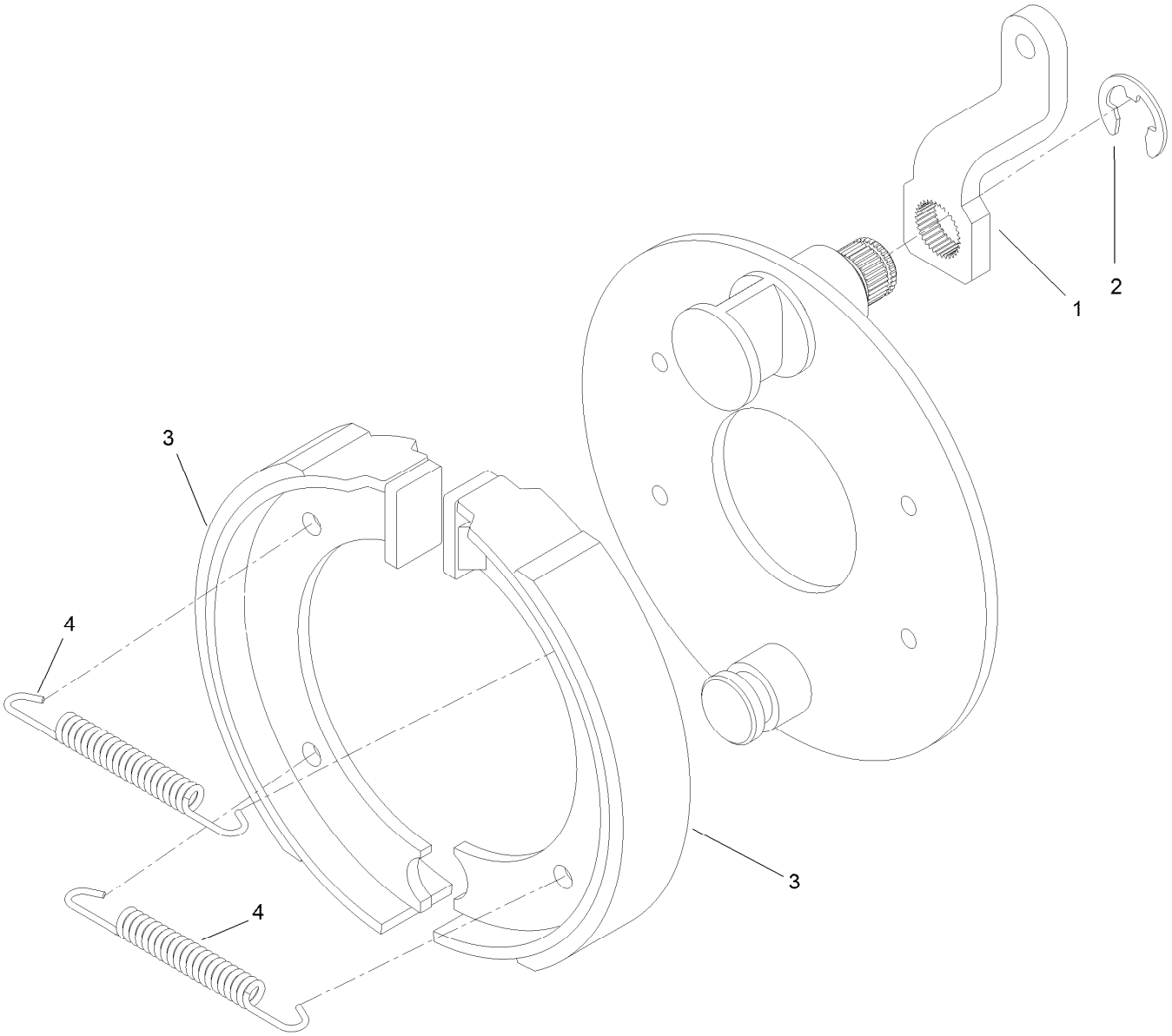

Brake Assembly No. 127-8535

Ref.	*Part Number*	*Qty.*	*Description*
1	127-8567	1	Lever
2	127-8566	1	E-Clip, 15MM External
3	127-8570	2	Brake-Shoe
4	127-8569	2	Brake-Spring

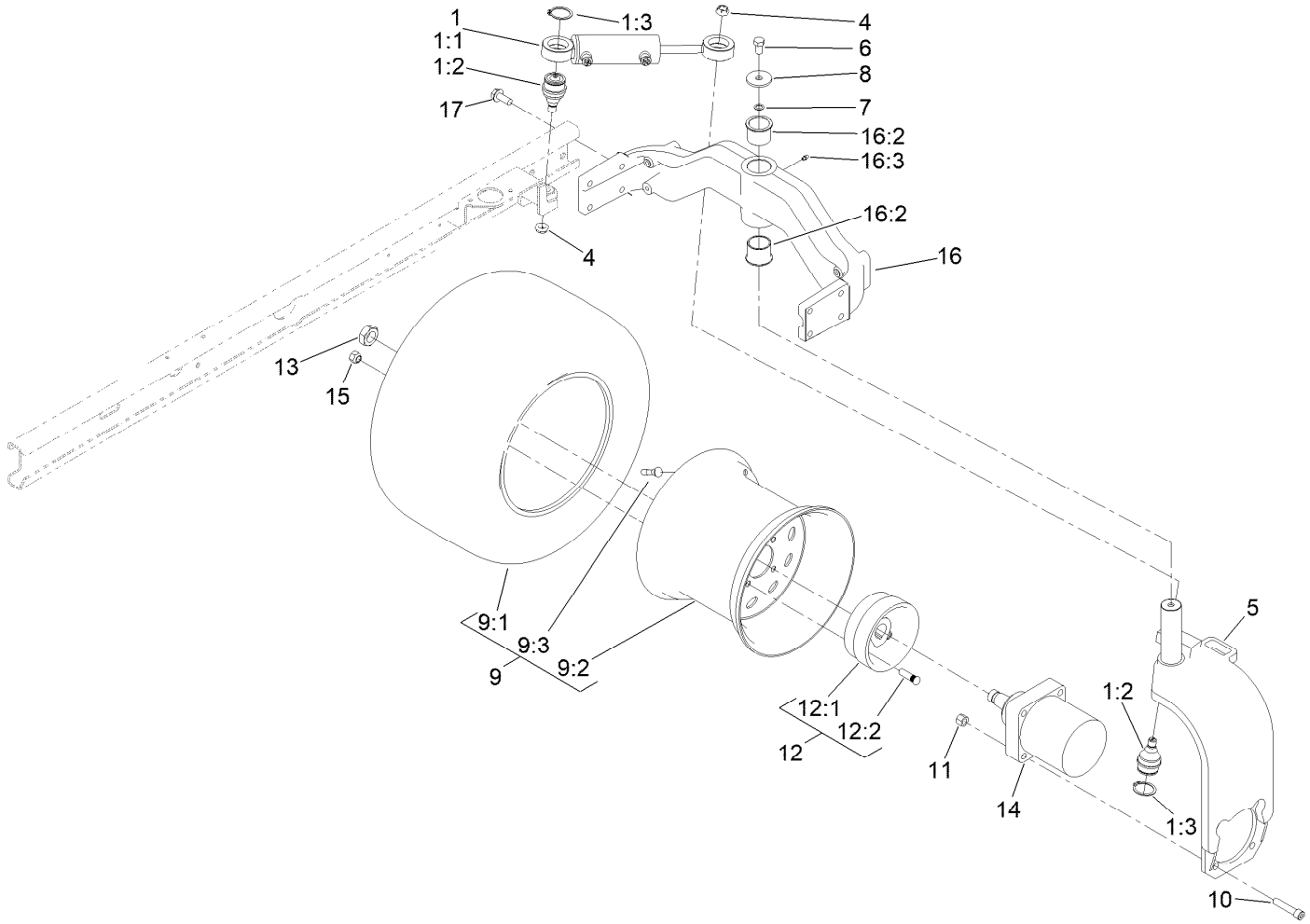

Rear Fork Assembly

Ref.	Part Number	Qty.	Description
1	133-4912	1	Steering Cylinder ASM
1:1	121-7835	1	Steering Cylinder ASM
1:2	121-3605	2	Ball Joint
1:3	32151-104	2	Ring-Retaining, External
4	121-3611	2	Nut-Hex, Flextop
5	127-8448-01	1	Rear Fork ASM
6	325-3	1	Screw-HH
7	3255-2	1	Washer-Lock, EXT
8	75-7730	1	Washer-Thrust
9		1	Tire ASM ●
9:1	120-2114	1	Tire-Smooth
9:2	120-2115	1	Wheel-12 Inch
9:3	232-27	1	Stem-Valve

Ref.	Part Number	Qty.	Description
10	3274-71	4	Screw-HSH
11	3296-23	4	Nut-Lock, NI
12	103-0590	1	Wheel Hub ASM
12:1	103-0589	1	Hub-Wheel
12:2	1-633926	4	Stud-Wheel
13	26-3790	1	Nut-Lock
14	95-8694	1	HYD Motor ASM
15	242-50	4	Nut-Lug
16	127-8576	1	Rear Casting ASM
16:2	127-8572	2	Bushing-Flange
16:3	302-5	1	Fitting-Grease
17	3234-38	8	Screw-HHF

● Not serviced separately

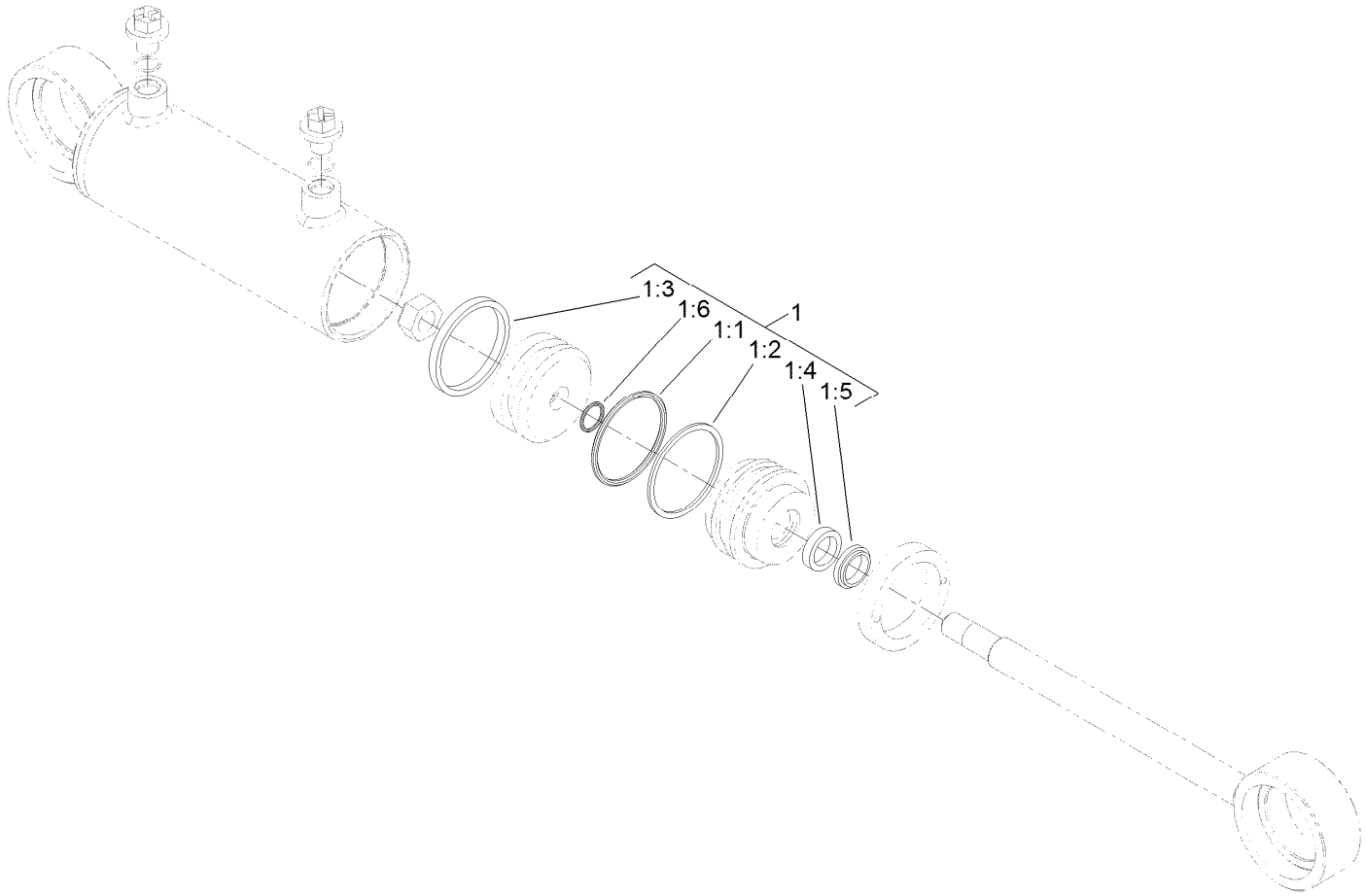

Steering Cylinder Assembly No. 121-7835

Ref.	*Part Number*	*Qty.*	*Description*
1	121-7844	1	Kit-Seal
1:1		1	O-Ring ●
1:2		1	Backup ●
1:3		1	Psp Seal ●
1:4		1	Bt Seal ●
1:5		1	Dust Seal-Dt ●
1:6		1	O-Ring ●

● Not serviced separately

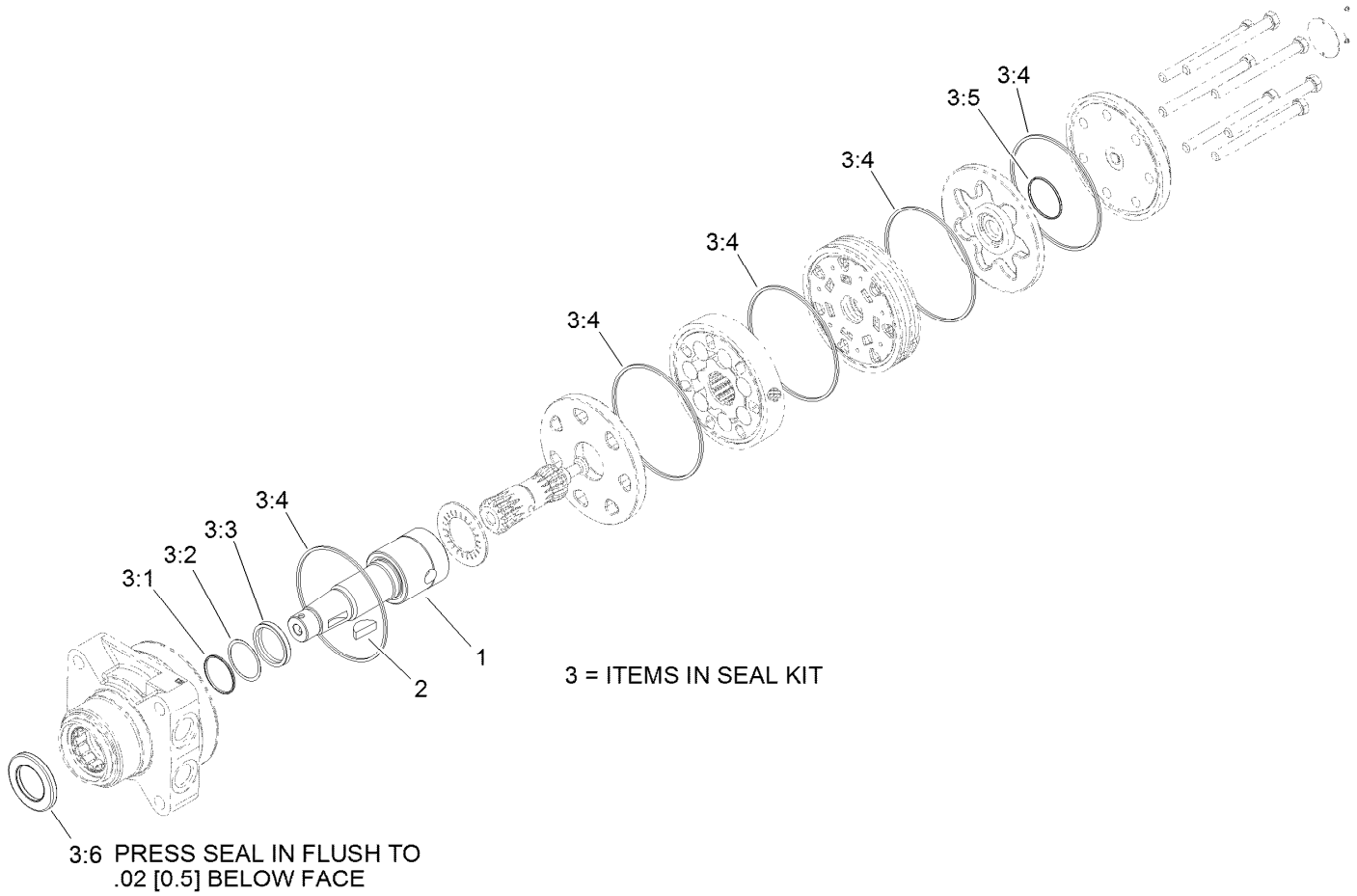

Hydraulic Motor Assembly No. 95-8694

Ref.	*Part Number*	*Qty.*	*Description*
1	99-3090	1	Shaft-Coupling
2	3257-42	1	Key-Woodruff
3	100-6131	1	Seal Kit
3:1		1	Ring-Back Up ●
3:2		1	Washer-Back Up ●
3:3		1	Seal-Shaft ●
3:4		5	Seal-Ring ●
3:5		1	Seal-Commutator ●
3:6		1	Seal-Dirt And Water ●

● Not serviced separately

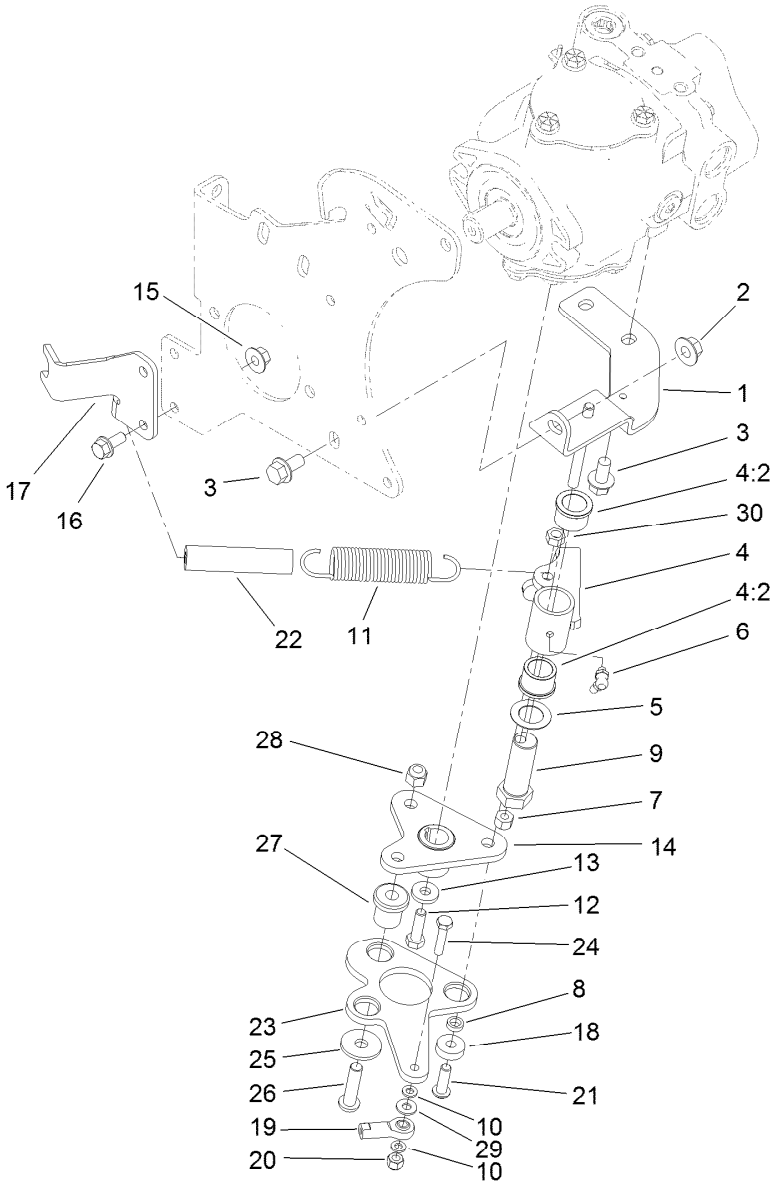

Neutral Arm Assembly

Ref.	Part Number	Qty.	Description
1	95-8960-0P	1	Bracket-Neutral
2	32128-43	1	Nut-Flange
3	3234-1	3	Screw-HHF
4	104-0422	1	Neutral Arm ASM
4:2	256-113	2	Bushing-Flange
5	3-6498	1	Washer-Thrust
6	302-60	1	Fitting-Grease
7	3296-29	1	Nut-Lock, NI
8	100-4817	1	Spacer
9	76-8640	1	Stud-Traction
10	33093-00	2	Washer-Flat
11	94-1369	1	Spring-Extension
12	3210-6	1	Screw-HH
13	88-7200	1	Washer-Flat
14	120-5566	1	Hub
15	32128-44	2	Nut
16	3234-5	2	Screw-HHF
17	104-0464-03	1	Bracket-Support, Cable
18	251-259	1	Bearing-Ball
19	2411-41	1	Rod End-Ball Joint
20	3296-42	1	Nut-Lock, NI
21	3274-104	1	Screw-HSBH
22	99-3556	1	Hose
23	99-3594-0P	1	Lever-Pump
24	321-8	1	Screw-HH
25	2844	3	Washer
26	95-3857	3	Screw-HSBH
27	63-9750	3	Mount
28	3296-39	3	Nut-Lock, NI
29	3256-22	1	Washer-Flat
30	32153-3	1	Nut-Hex, Side Deform

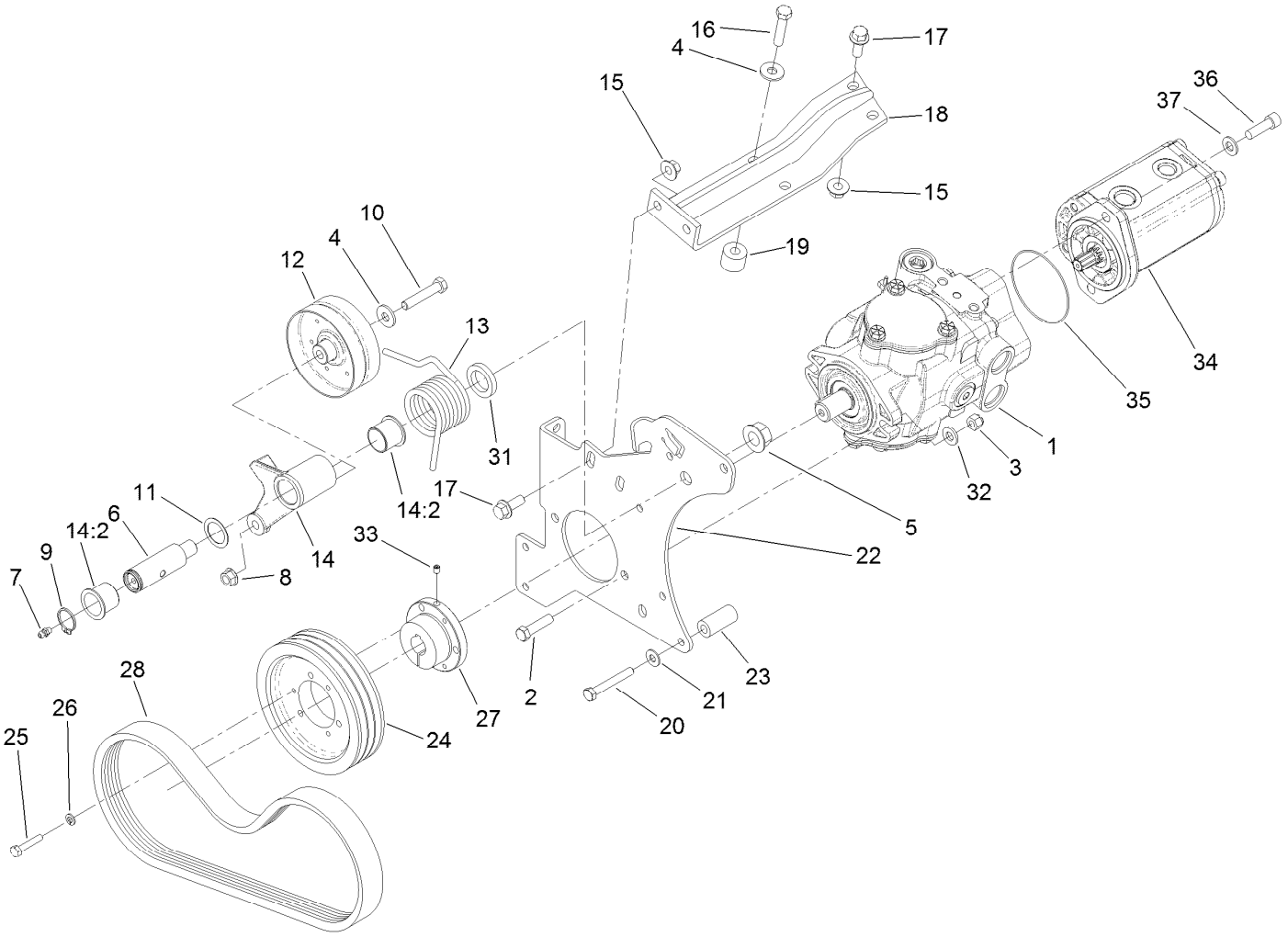

Piston Pump and Gear Pump Assembly

Ref.	Part Number	Qty.	Description
1	104-4890	1	Piston Pump ASM
2	323-8	2	Screw-HH
3	3296-39	2	Nut-Lock, NI
4	80-6990	2	Washer-Hardened
5	32128-54	1	Nut-HF
6	99-3624	1	Shaft-Pivot, Idler
7	302-5	1	Fitting-Grease
8	32128-21	1	Nut-HF Lock
9	32151-36	1	Ring-Retaining
10	323-10	1	Screw-HH
11	74-1810	1	Washer
12	139-6031	1	Pulley-Idler
13	115-3488	1	Spring-Torsion
14	137-1653	1	Idler Arm ASM
14:2	126-1963	2	Bushing-Pivot
15	32128-43	4	Nut-Flange
16	323-19	2	Screw-HH
17	3234-11	4	Screw-HHF

Ref.	Part Number	Qty.	Description
18	99-3436-0P	1	Support-Pump
19	99-3440	2	Spacer
20	33114-060	4	Screw-HH
21	87-8640	3	Washer-Flat
22	95-8933-0P	1	Plate - Pump Mount *b
23	95-8941	4	Spacer-Mount, Pump
24	99-3620	1	Pulley-3V, Pump
25	321-13	3	Screw-HH
26	3253-3	3	Washer-Lock
27	100-4813	1	Bushing-Lock, Taper
28	99-3619	1	Belt-3V
31	99-3625	1	Spacer-Arm, Idler
32	100-4852	2	Washer-Hardened
33	3245-7	1	Screw-Set
34	121-7841	1	HYD Gear Pump ASM
35	60-3520	1	O-Ring
36	323-7	2	Screw-HH
37	3256-24	4	Washer-Plain

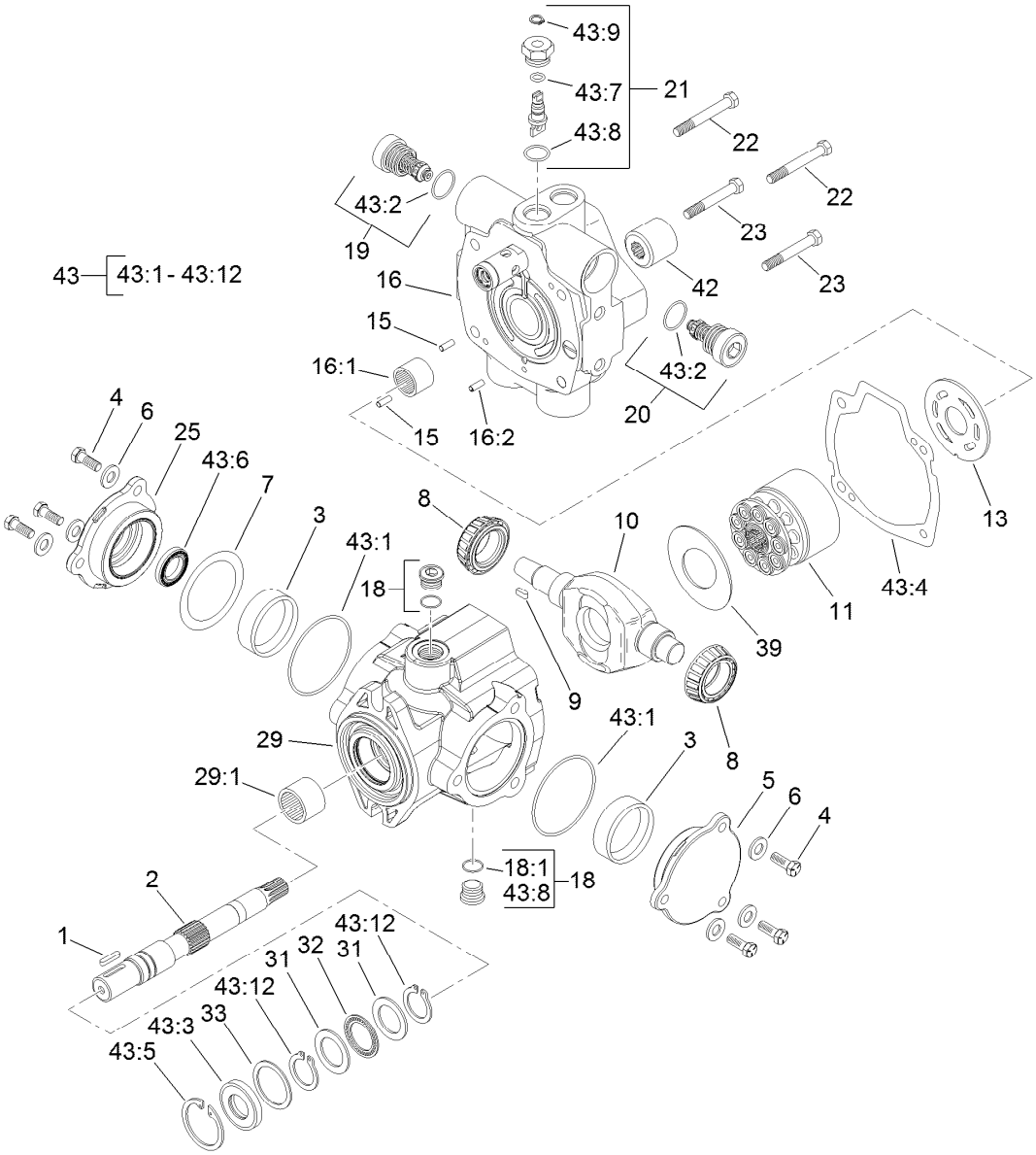

Hydraulic Pump Assembly No. 104-4890

Ref.	Part Number	Qty.	Description
1	94-3645	1	Key
2	94-6359	1	Shaft-Drive
3	104-4046	2	Bearing-Cup
4	98-4640	6	Screw-Cap
5	98-4644	1	Plate-Cover
6	105-9762	6	Washer
7	100-3182	2	Shim Kit
8	98-4639	2	Bearing-Cone
9	94-3646	1	Key
10	104-4888	1	Swashplate
11	76-6070	1	Rotating Kit
13	104-0429	1	Plate-Valve
15	76-6150	2	Pin-Dowel
16	105-3813	1	Endcover Sub ASM
16:1	94-6368	1	Bearing
16:2		1	Pin-Roll ■
18	74-9280	2	Plug ASM
18:1		1	O-Ring ■

Ref.	Part Number	Qty.	Description
19	104-4889	1	Relief Valve ASM
20	105-3812	1	Valve-Check
21	105-3811	1	Valve-Bypass
22	76-6170	2	Capscrew
23	76-6160	2	Capscrew
25	98-4645	1	Plate-Cover
29	100-3176	1	Housing ASM
29:1	94-6363	1	Bearing
31	252-71	2	Washer-Thrust
32	252-66	1	Bearing-Thrust
33	33-3720	1	Washer
39	98-4635	1	Insert-Plate, Cam
42	74-9040	1	Coupler
43	120-5754	1	Seal Kit
43:1		2	O-Ring ■
43:2		2	O-Ring ■
43:3		1	Seal-Shaft ■
43:4		1	Gasket ■

● Not illustrated

■ Not serviced separately

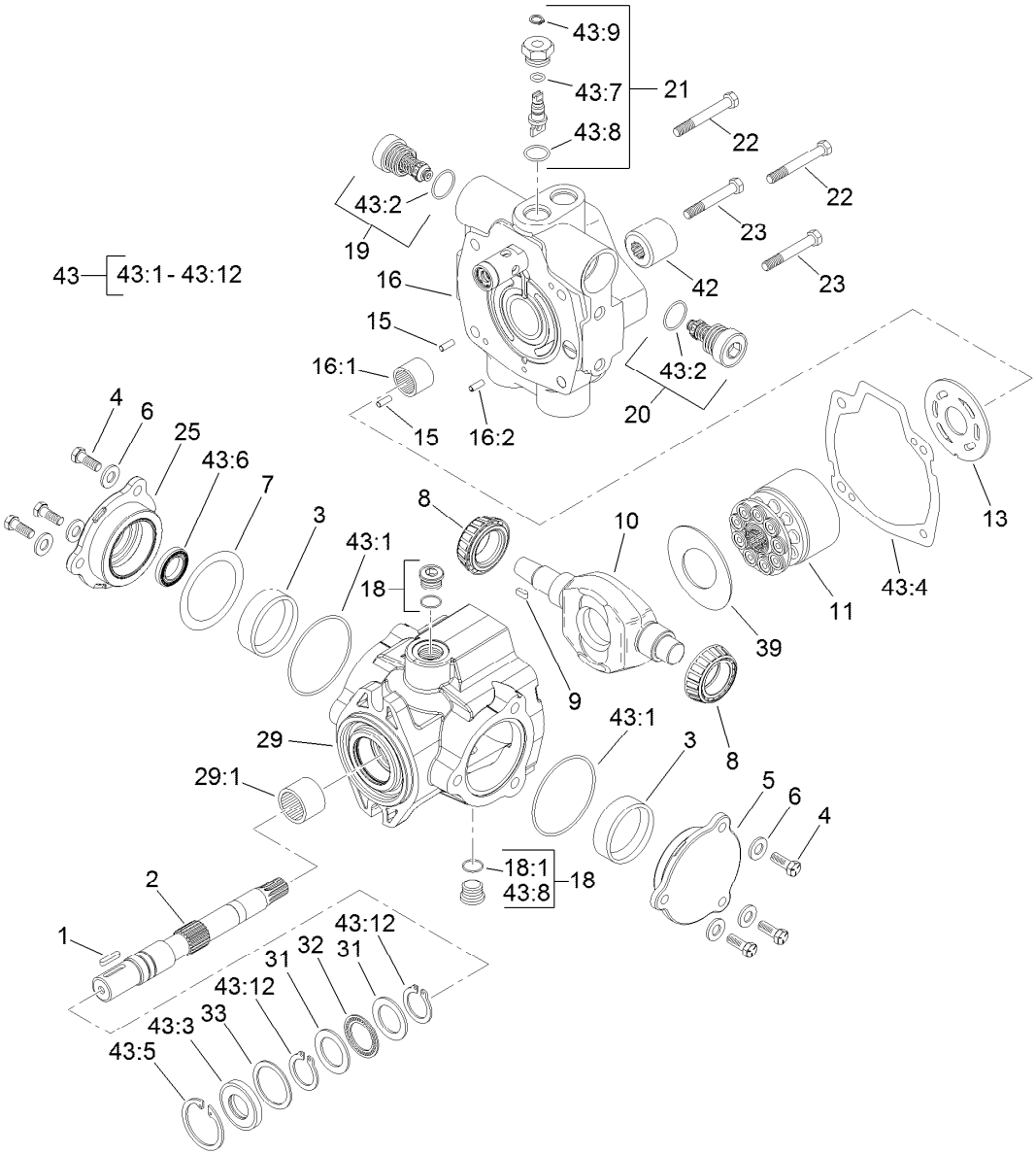

Hydraulic Pump Assembly No. 104-4890 (continued)

Ref.	Part Number	Qty.	Description
43:5		1	Ring-Retaining ■
43:6		1	Seal-Shaft ■
43:7		1	O-Ring ■
43:8		5	O-Ring ■
43:9		1	Ring-Retaining ■

Ref.	Part Number	Qty.	Description
43:10		1	O-Ring ● ■
43:11		1	O Ring-Molded ● ■
43:12		2	Ring-Retaining ■
43:13		1	O-Ring ■ ●

● Not illustrated

■ Not serviced separately

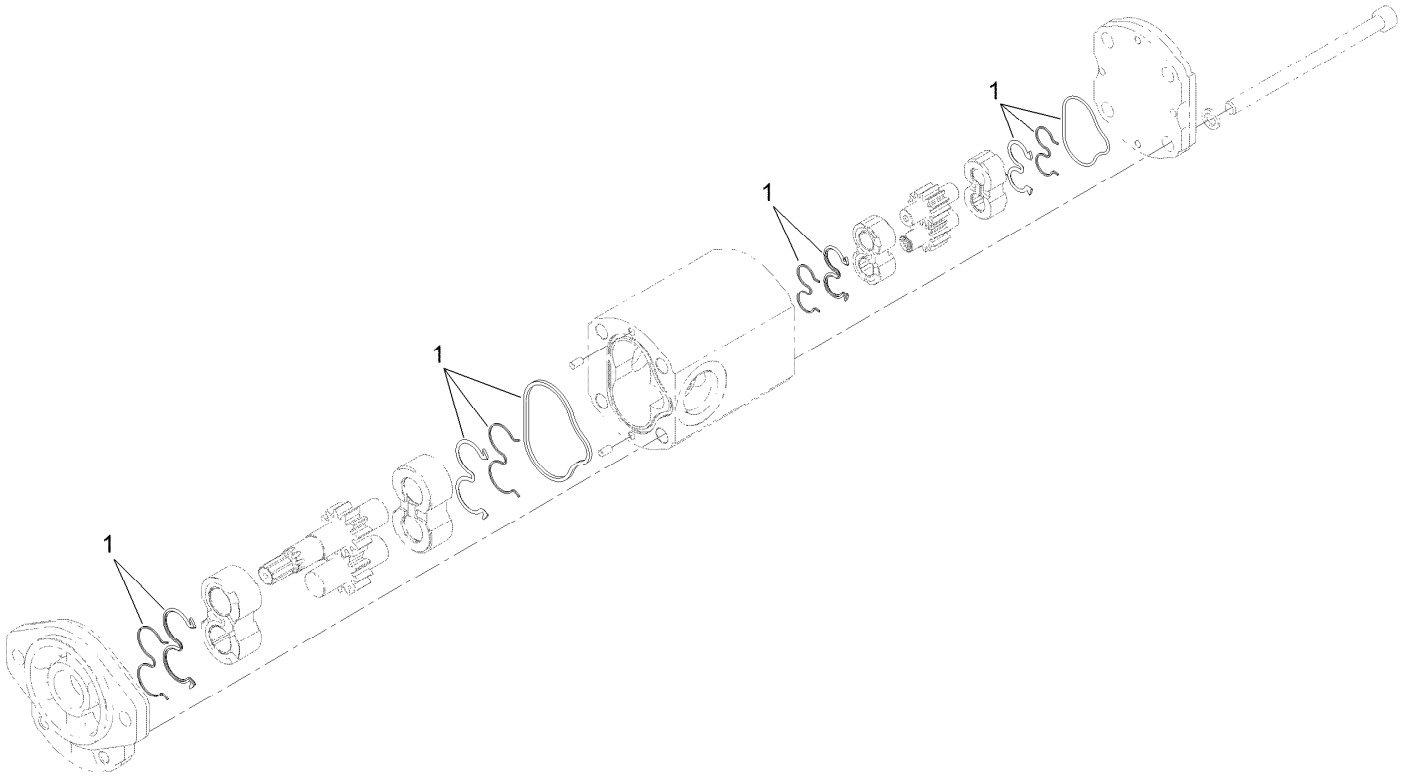

Hydraulic Gear Pump Assembly No. 121-7841

Ref.	*Part Number*	*Qty.*	*Description*
1	119-7134	1	Kit-Seal

Traction Hydraulic Assembly

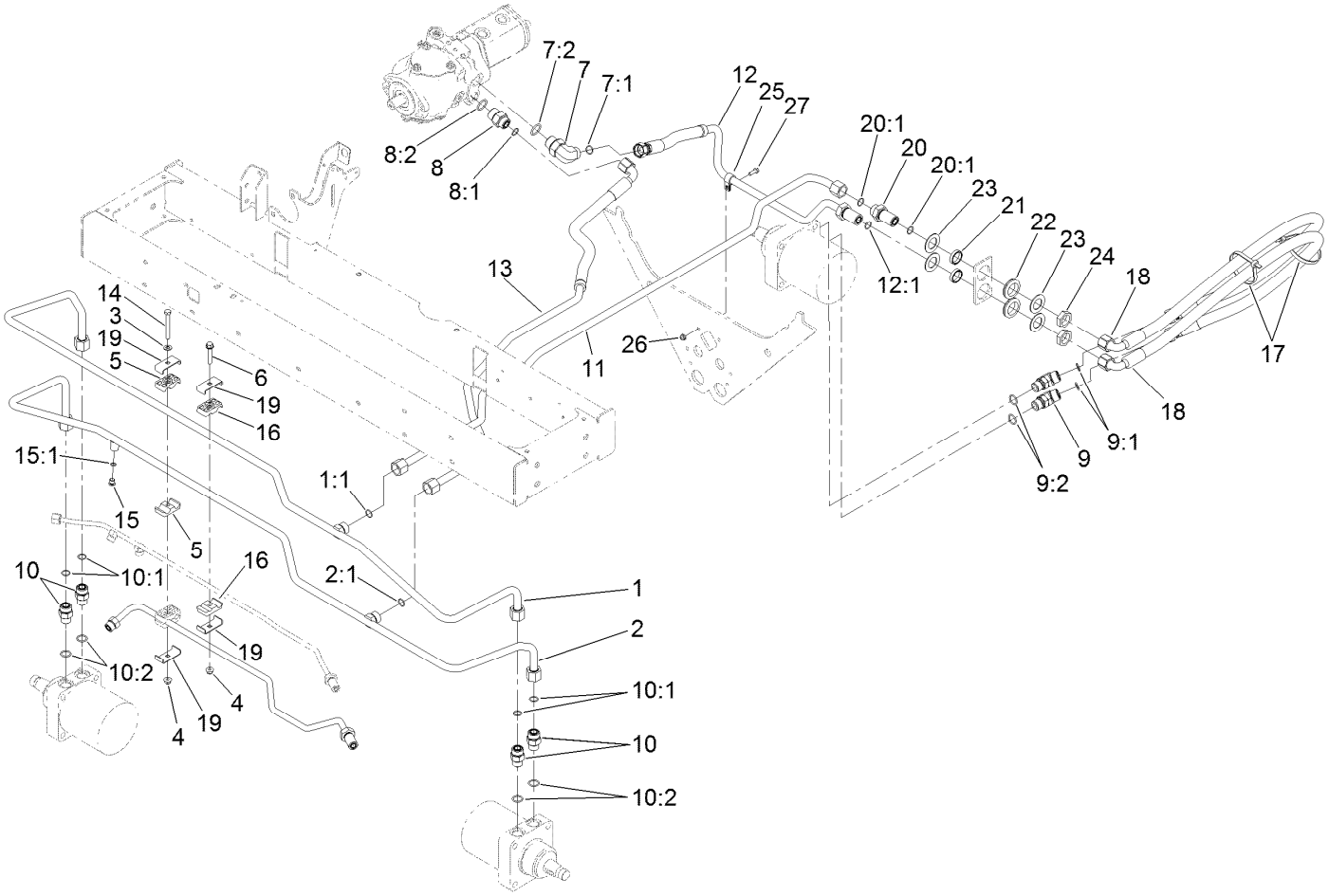

Traction Hydraulic Assembly (continued)

Ref.	Part Number	Qty.	Description
1	127-8500	1	Tube-HYD
1:1	237-65	1	O-Ring
2	127-8501	1	Tube-HYD
2:1	237-65	1	O-Ring
3	3256-23	1	Washer-Plain
4	104-8300	2	Nut-HF, NI
5	56-7971	2	Clamp-Tube
6	94-5780	1	Screw-HWH
7	340-139	1	Fitting-Elbow 90
7:1	237-81	1	O-Ring
7:2	237-65	1	O-Ring
8	340-8	1	Fitting-Straight
8:1	237-65	1	O-Ring
8:2	237-81	1	O-Ring
9	340-14	2	Fitting-HYD, 45 DEG
9:1	237-65	1	O-Ring
9:2	237-80	1	O-Ring
10	340-7	4	Fitting-Straight
10:1	237-65	1	O-Ring
10:2	237-80	1	O-Ring
11	127-8513	1	Tube-HYD

Ref.	Part Number	Qty.	Description
12	133-4911	1	HYD Tube ASM
12:1	237-65	1	O-Ring
13	127-8514	1	Tube-HYD
14	322-13	1	Screw-HH
15	353-990	1	Plug ASM
15:1	237-78	1	O-Ring
16	56-7970	2	Clamp-Tube
17	3334-945	2	Tie-Cable
18	119-3922	2	Hose-HYD
19	119-1419	4	Plate-Clamp
20	340-76	1	Fitting-Bulkhead Union, Straight
20:1	237-65	2	O-Ring
21	125-1984	2	Spacer
22	240-3	2	Grommet-Rubber
23	69-9010	4	Washer
24	340-74	2	Nut-Lock, Bulkhead
25	2412-87	1	Clamp-Cable
26	104-7201	1	Nut-HF, NI
27	321-4	1	Screw-HH

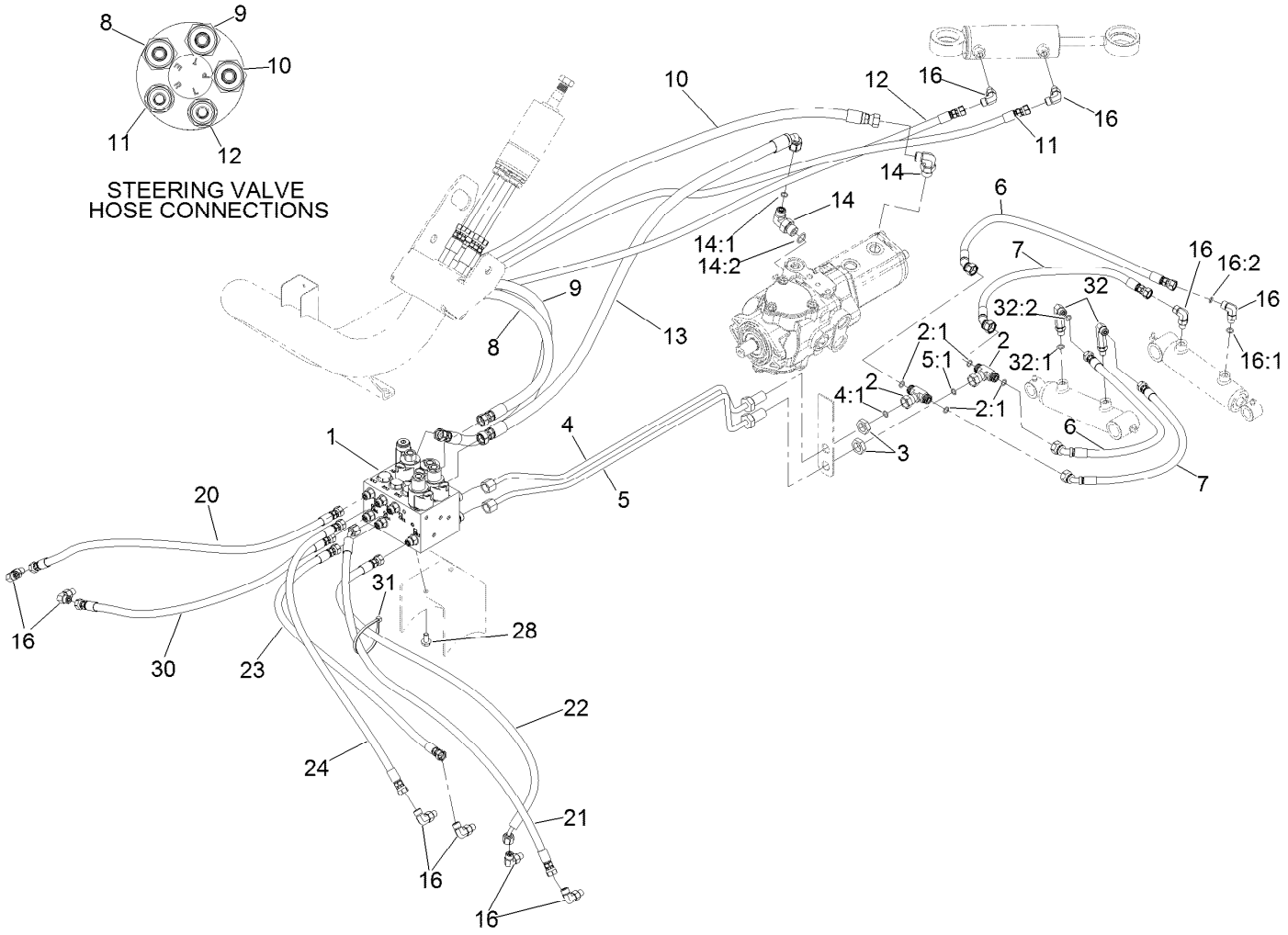

Lift Manifold and Steering Circuit Assembly

Ref.	Part Number	Qty.	Description
1	138-6998	1	Lift Manifold ASM
2	340-166	2	Fitting-Tee
2:1	237-22	2	O-Ring
3	340-70	2	Nut-Lock
4	133-4926	1	Tube-HYD
4:1	237-22	1	O-Ring
5	133-4927	1	Tube-HYD
5:1	237-22	1	O-Ring
6	139-5978	2	Hose-HYD
7	139-5977	2	Hose-HYD
8	120-2060	1	Hose-HYD
9	138-4261	1	Hose ASM-HYD HP
10	119-2067	1	Hose-HYD
11	121-7836	1	Hose-HYD
12	108-5673	1	Hose-HYD
13	93-5386	1	Hose ASM
14	340-18	2	Fitting-HYD, 90 DEG

Ref.	Part Number	Qty.	Description
14:1	237-79	1	O-Ring
14:2	237-22	1	O-Ring
16	340-132	10	Fitting-Elbow, 90 DEG
16:1	237-78	1	O-Ring
16:2	237-21	1	O-Ring
20	108-6508	1	Hose-HYD
21	92-7641	1	Hose ASM
22	87-4890	1	Hose ASM
23	106-9674	1	Hose-HYD
24	92-7564	1	Hose-HYD
28	3234-7	2	Screw-HHF
30	108-6506	1	Hose-HYD
31	3290-378	1	Tie-Cable
32	100-7695	2	Fitting-Elbow 90
32:1	237-78	1	O-Ring
32:2	237-21	1	O-Ring

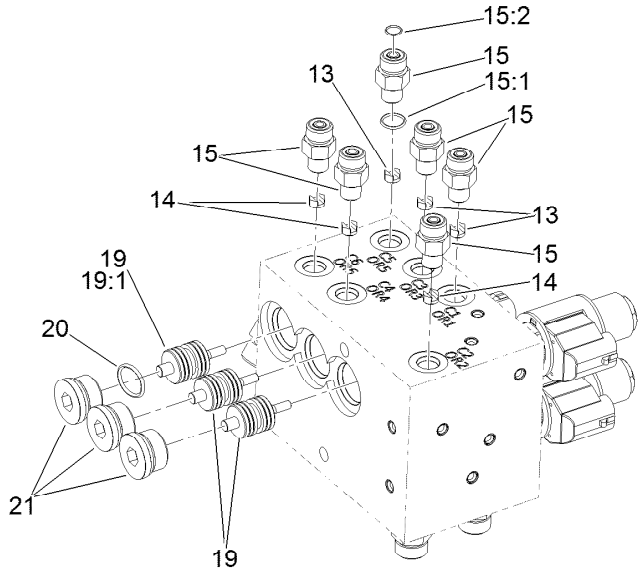

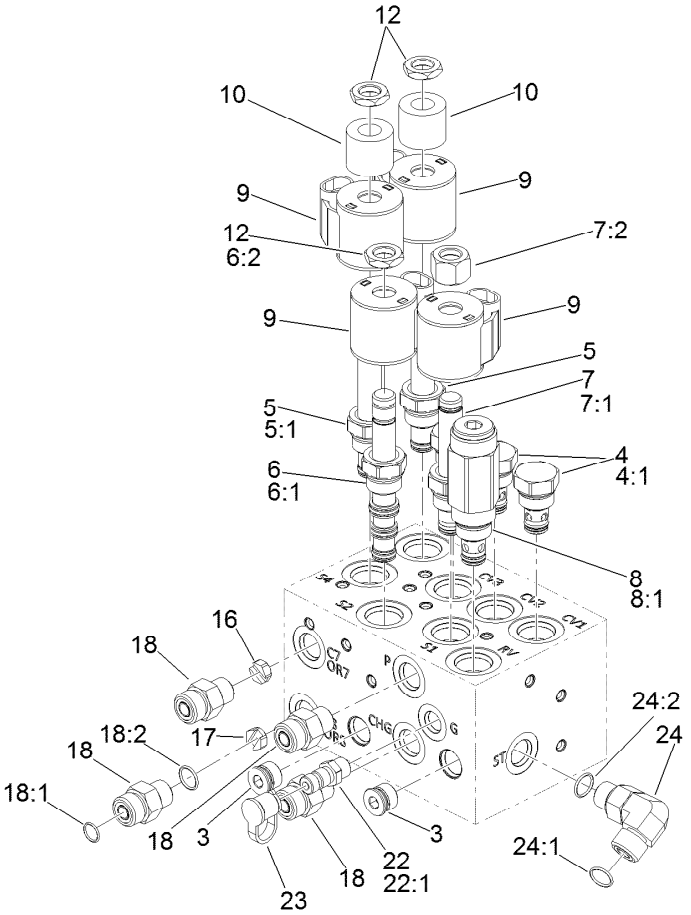

Lift Manifold Assembly No. 138-6998

Ref.	Part Number	Qty.	Description
3	112-9213	2	Plug
4	110-9006	3	Valve-Check
4:1	105-9156	1	Seal Kit
5	136-6351	2	Valve-Double Blocking
5:1	107-7527	1	Seal Kit
6	120-1665	1	Valve-Solenoid
6:1	112-6520	1	Seal Kit
6:2	110-2634	1	Nut-Coil
7	107-7517	1	Valve-Solenoid
7:1	105-9156	1	Seal Kit
7:2	107-7812	1	Nut-Solenoid
8	120-1663	1	Valve-Relief, 500 PSI
8:1	105-9156	1	Seal Kit
9	110-0497	4	Coil-Solenoid
10	110-8909	2	Spacer-Coil
12	110-2634	3	Nut-Coil
13	121-7879	3	Orifice-Control, Flow (0.040)
14	110-8902	3	Orifice-Control, Flow (0.046)

Ref.	Part Number	Qty.	Description
15	340-92	6	Fitting-Straight
15:1	237-78	1	O-Ring
15:2	237-21	1	O-Ring
16	119-5342	1	Orifice-Control, Flow (.035)
17	119-2010	1	Orifice-Control, Flow (0.055)
18	340-2	4	Fitting-Straight
18:1	237-22	1	O-Ring
18:2	237-42	1	O-Ring
19	110-8901	3	Piston-Pilot
19:1	110-8900	1	O-Ring
20	110-8900	3	O-Ring
21	139-6024	3	Plug-Socket, SAE
22	354-77	1	Fitting-Quick
22:1	237-78	1	O-Ring ●
23	354-79	1	Cap-Dust
24	340-77	1	Fitting-Elbow, 90 DEG
24:1	237-22	1	O-Ring
24:2	237-42	1	O-Ring

● Not illustrated

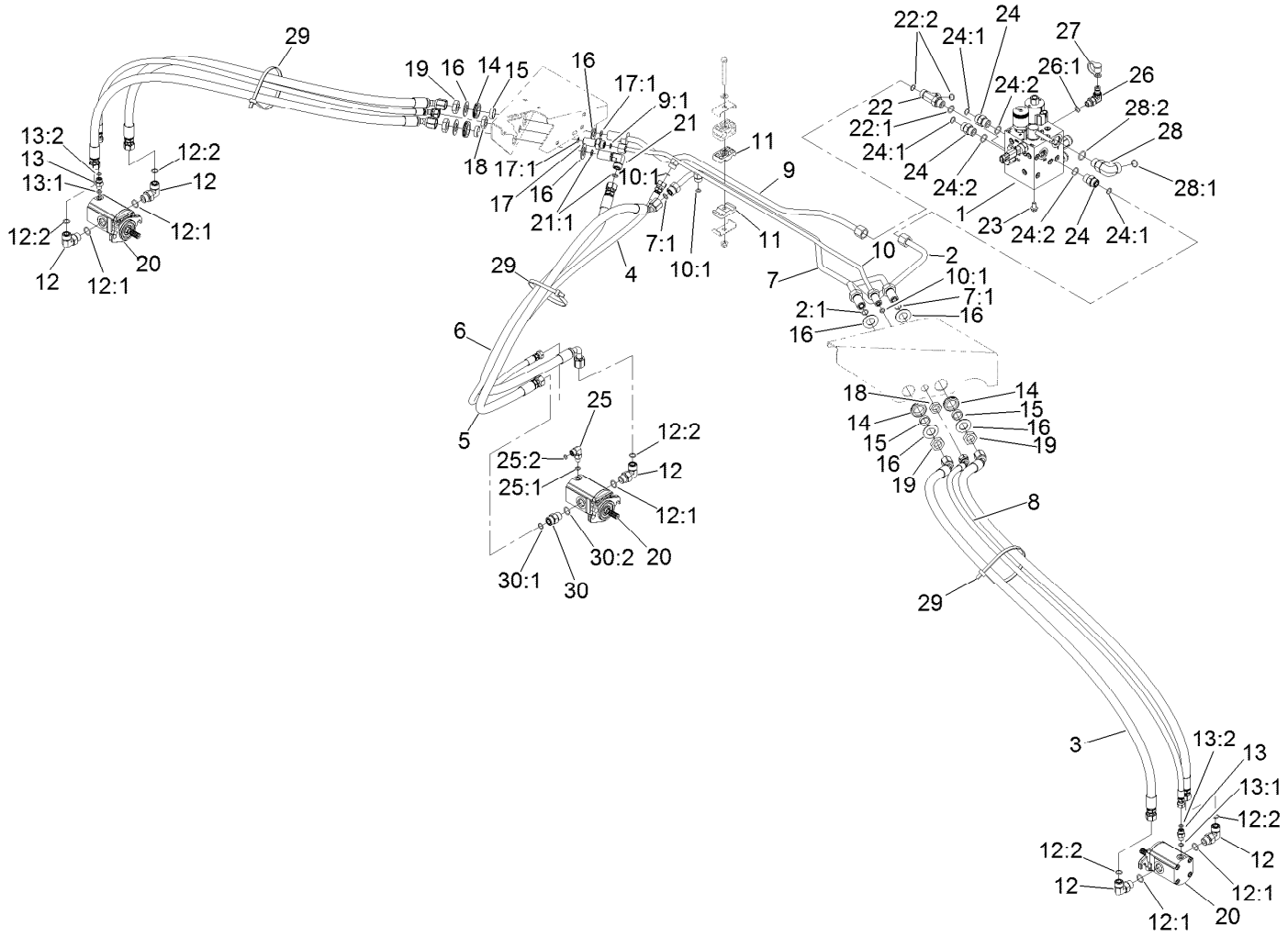

Front Mow Hydraulic Circuit Assembly

Ref.	Part Number	Qty.	Description
1	139-6025	1	Manifold ASM-Mow
2	127-8511	1	Tube-HYD
2:1	237-30	1	O-Ring
3	139-5981	4	Hose ASM
4	139-5980	1	Hose-HYD
5	121-7861	1	Hose-HYD
6	139-5979	1	Hose-HYD
7	127-8551	1	Tube-HYD
7:1	237-30	2	O-Ring
8	139-5982	2	Hose ASM
9	127-8509	1	Tube-HYD
9:1	237-30	1	O-Ring
10	120-2104	1	Tube-HYD
10:1	237-22	3	O-Ring
11	56-7976	2	Clamp-Tube
12	340-105	5	Fitting-Elbow, 90 DEG
12:1	237-80	1	O-Ring
12:2	237-30	1	O-Ring
13	340-92	2	Fitting-Straight
13:1	237-78	1	O-Ring
13:2	237-21	1	O-Ring

Ref.	Part Number	Qty.	Description
14	240-5	4	Grommet
15	69-8960	4	Spacer
16	69-8930	8	Washer
17	340-71	1	Fitting-Straight, Bulkhead
17:1	237-22	2	O-Ring
18	340-70	2	Nut-Lock
19	340-127	4	Nut-Bulkhead
20	127-8436	3	Motor-HYD, 16Cc
21	93-9151	1	Fitting-HYD
21:1	237-30	2	O-Ring
22	340-109	1	Fitting-Tee
22:1	237-79	1	O-Ring
22:2	237-30	2	O-Ring
23	3234-7	2	Screw-HHF
24	340-4	3	Fitting-Straight
24:1	237-30	1	O-Ring
24:2	237-79	1	O-Ring
25	340-132	1	Fitting-Elbow, 90 DEG
25:1	237-78	1	O-Ring
25:2	237-21	1	O-Ring
26	115-9148	1	Fitting-Elbow-90

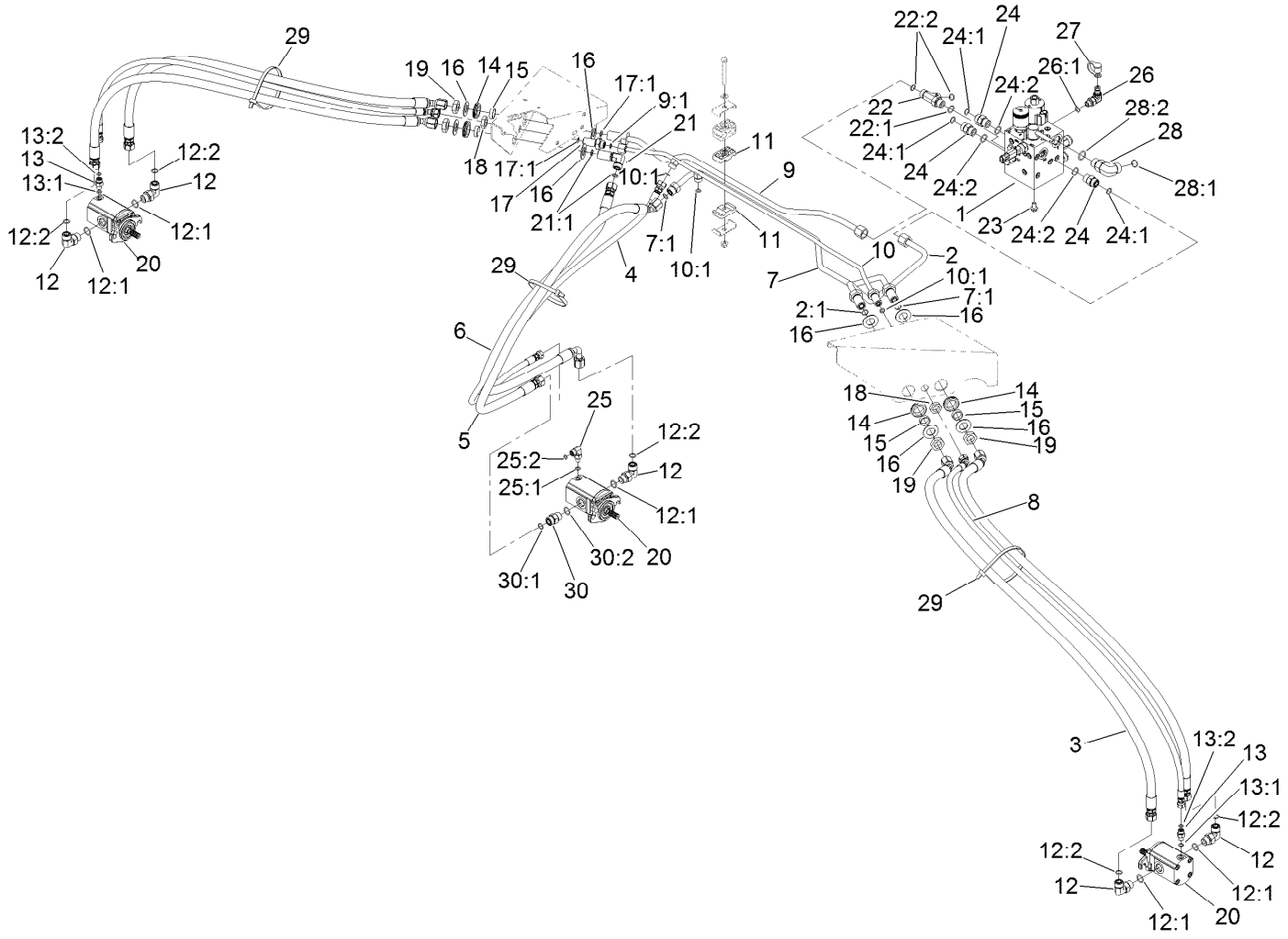

Front Mow Hydraulic Circuit Assembly (continued)

Ref.	Part Number	Qty.	Description
26:1	237-42	1	O-Ring
27	354-79	1	Cap-Dust
28	340-17	1	Fitting-Elbow, 90 DEG
28:1	237-65	1	O-Ring
28:2	237-80	1	O-Ring

Ref.	Part Number	Qty.	Description
29	3334-945	3	Tie-Cable
30	340-6	1	Fitting-Straight
30:1	237-30	1	O-Ring
30:2	237-80	1	O-Ring

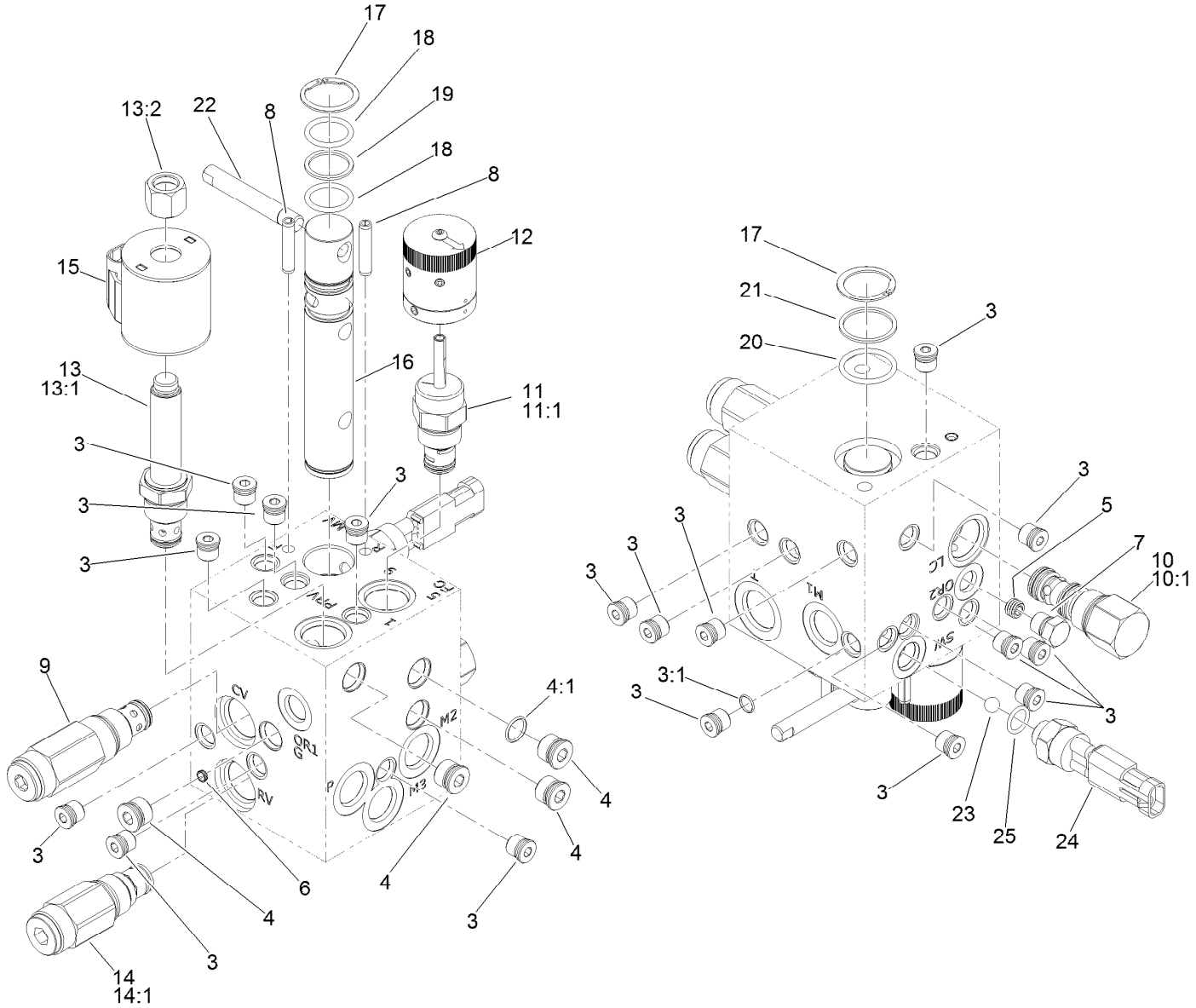

Mow Manifold Assembly No. 139-6025

Ref.	Part Number	Qty.	Description
3	353-990	17	Plug ASM
3:1	237-78	1	O-Ring
4	353-989	4	Plug-Hex, Hollow
4:1	237-42	1	O-Ring
5	110-8987	1	Plug-Orifice (0.015 Rw)
6	110-0495	1	Plug-Orifice (0.050 Inch)
7	117-0115	1	Plug
8	112-6531	2	Pin-Spring
9	132-4912	1	Valve-Check
10	121-7880	1	Spool-Logic
10:1	119-2159	1	Seal Kit ●
11	110-8769	1	Valve-Control, Manual Flow
11:1	110-2633	1	Seal Kit
12	110-8767	1	Rotary Handle ASM
13	110-8799	1	Valve-Relief, Proportional

Ref.	Part Number	Qty.	Description
13:1	110-6316	1	Seal Kit
13:2	130-8180	1	Nut-Coil (9/16-24 Unef-2B)
14	121-7883	1	Valve-Relief, 2000 PSI
14:1	110-6316	1	Seal Kit ●
15	110-6344	1	Coil-12V, DC
16	120-1652	1	Spool-Backlap
17	120-1653	2	Ring-Retaining, External
18	120-1657	2	O-Ring
19	120-1656	1	Ring-Backup
20	120-1655	1	O-Ring
21	120-1654	1	Ring-Backup
22	120-1651	1	Handle-Spool
23	117-4605	1	Ball-SS
24	72-4320	1	Switch-Ball
25	110-8757	1	O-Ring

● Not illustrated

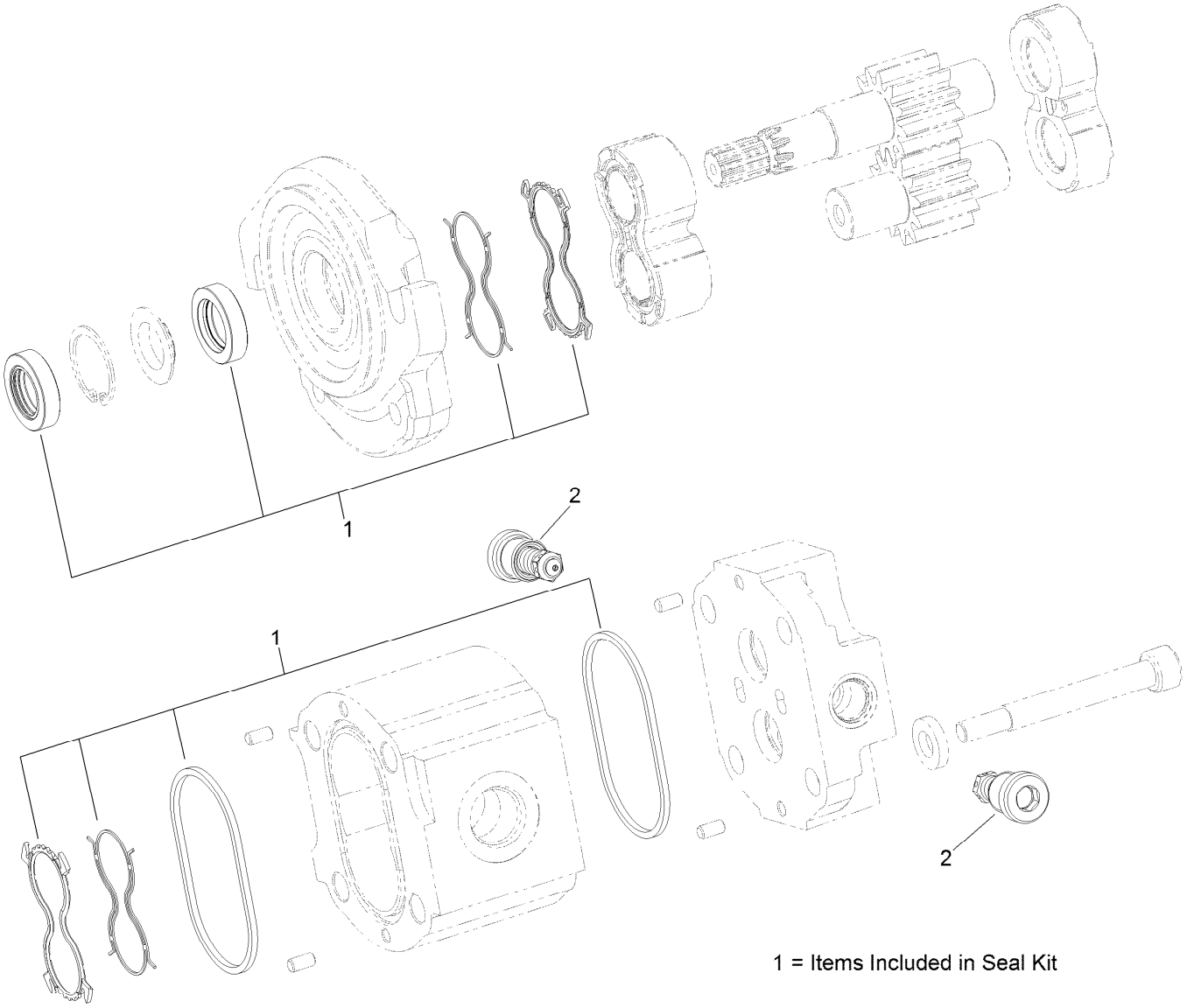

Hydraulic Gear Motor Assembly No. 127-8436

Ref.	*Part Number*	*Qty.*	*Description*
1	138-1234	1	Seal Kit
2	117-5107	1	Valve-Check

Rear Mow Hydraulic Circuit Assembly

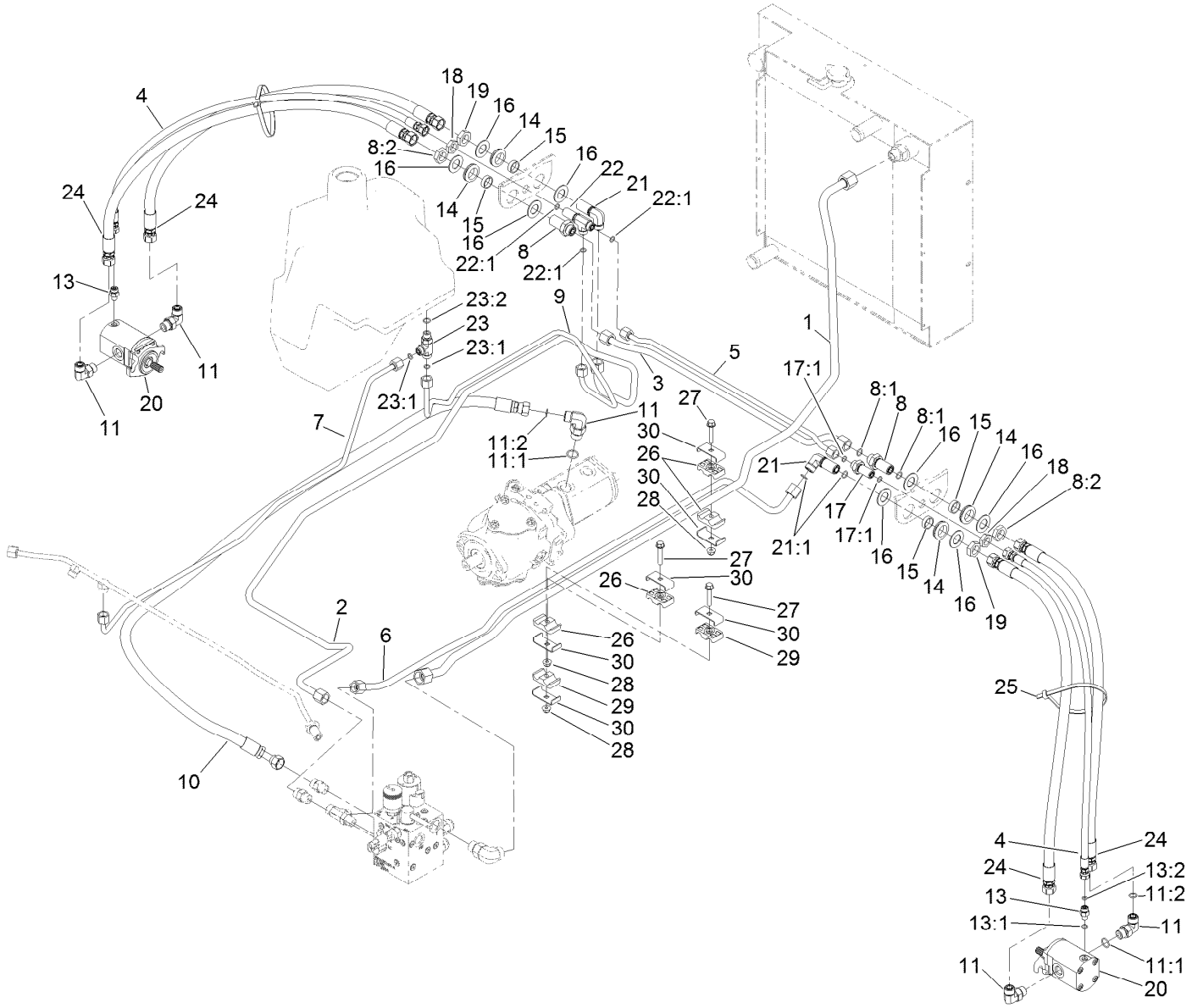

Rear Mow Hydraulic Circuit Assembly (continued)

Ref.	Part Number	Qty.	Description
1	127-8512	1	Tube-HYD
2	127-8508	1	Tube-HYD
3	120-2173	1	Tube-HYD
4	139-5983	2	Hose-HYD
5	120-2174	1	Tube-HYD
6	127-8510	1	Tube-HYD
7	121-7843	1	Tube-HYD
8	340-161	2	Fitting-Bulkhead
8:1	237-30	2	O-Ring
8:2	340-127	1	Nut-Bulkhead
9	120-2180	1	Tube-HYD
10	121-7812	1	Hose-HYD
11	340-105	5	Fitting-Elbow, 90 DEG
11:1	237-80	1	O-Ring
11:2	237-30	1	O-Ring
13	340-92	2	Fitting-Straight
13:1	237-78	1	O-Ring
13:2	237-21	1	O-Ring
14	240-5	4	Grommet
15	69-8960	4	Spacer

Ref.	Part Number	Qty.	Description
16	69-8930	8	Washer
17	340-71	1	Fitting-Straight, Bulkhead
17:1	237-22	2	O-Ring
18	340-70	2	Nut-Lock
19	340-127	2	Nut-Bulkhead
20	127-8436	2	Motor-HYD, 16Cc
21	93-9151	2	Fitting-HYD
21:1	237-30	2	O-Ring
22	340-68	1	Fitting-Tee, Bulkhead
22:1	237-22	3	O-Ring
23	340-86	1	Fitting-Tee
23:1	237-22	2	O-Ring
23:2	237-42	1	O-Ring
24	95-8824	4	Hose ASM
25	3334-945	2	Tie-Cable
26	56-7977	6	Clamp-Tube
27	94-5780	5	Screw-HWH
28	104-8300	5	Nut-HF, NI
29	56-7971	4	Clamp-Tube
30	119-1419	10	Plate-Clamp

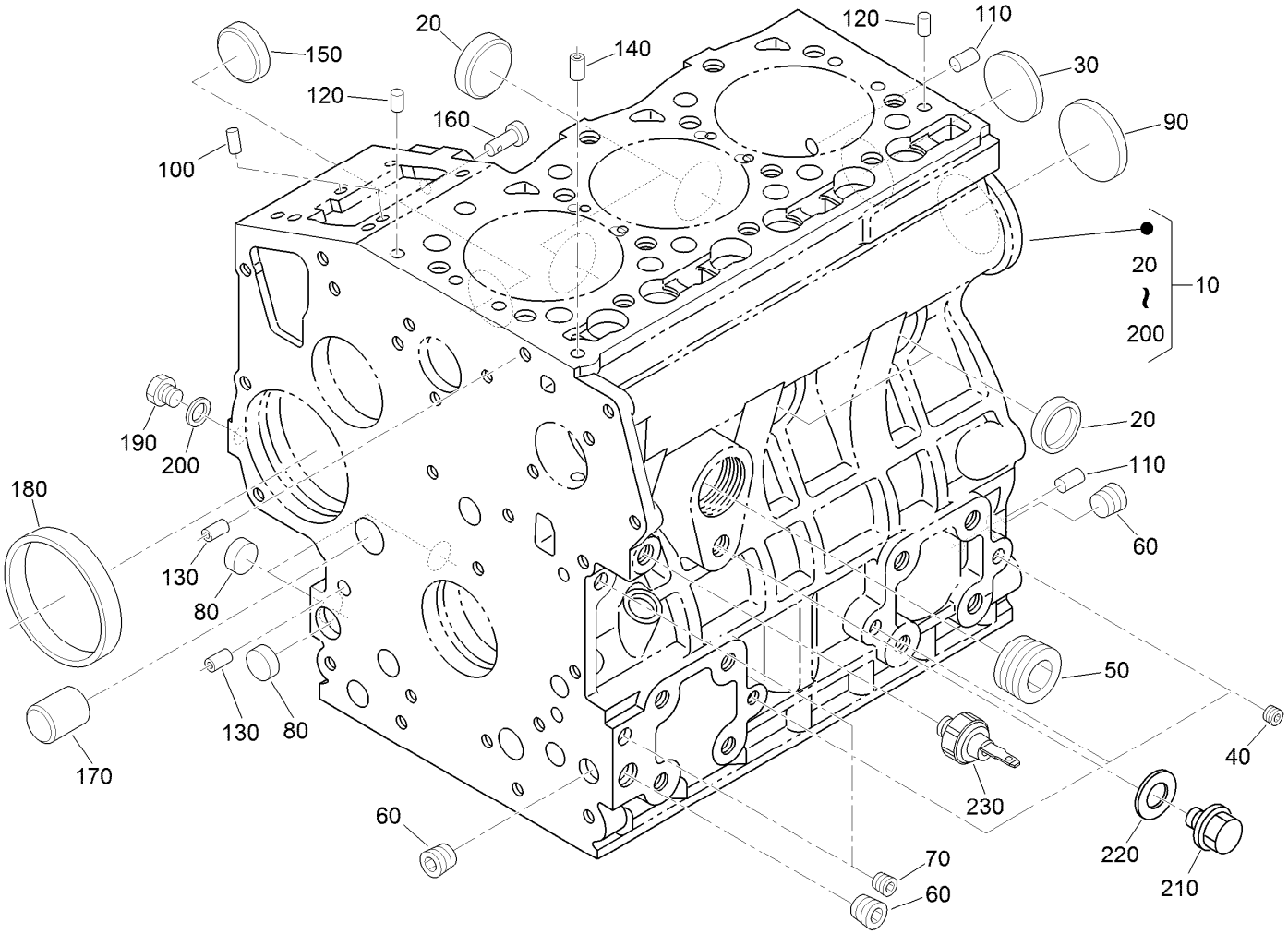

Crankcase Assembly

Ref.	Part Number	Qty.	Description
10	115-3443	1	Crankcase ASM
20	98-9398	4	Cap-Sealing
30	98-7539	1	Cap-Sealing
40	98-9687	3	Plug
50	105-3779	1	Plug
60	98-9597	3	Plug
70	98-7487	2	Plug
80	98-9379	3	Plug-Expansion
90	98-9668	1	Plug-Expansion
100	98-9375	2	Pin-Straight
110	98-9377	2	Pin-Straight
120	98-9376	2	Pin-Straight

Ref.	Part Number	Qty.	Description
130	98-9387	2	Pin-Pipe
140	98-9539	1	Pin-Pipe
150	98-9599	1	Plug
160	98-9630	1	Pin-Spring, Start
170	98-9675	1	Plug
180	98-9656	1	Bushing-Governor, Gear
190	120-2559	1	Plug
200	98-7428	1	Gasket
210	99-3447	1	Plug
220	112-8325	1	Washer
230	98-9416	1	Switch-Oil

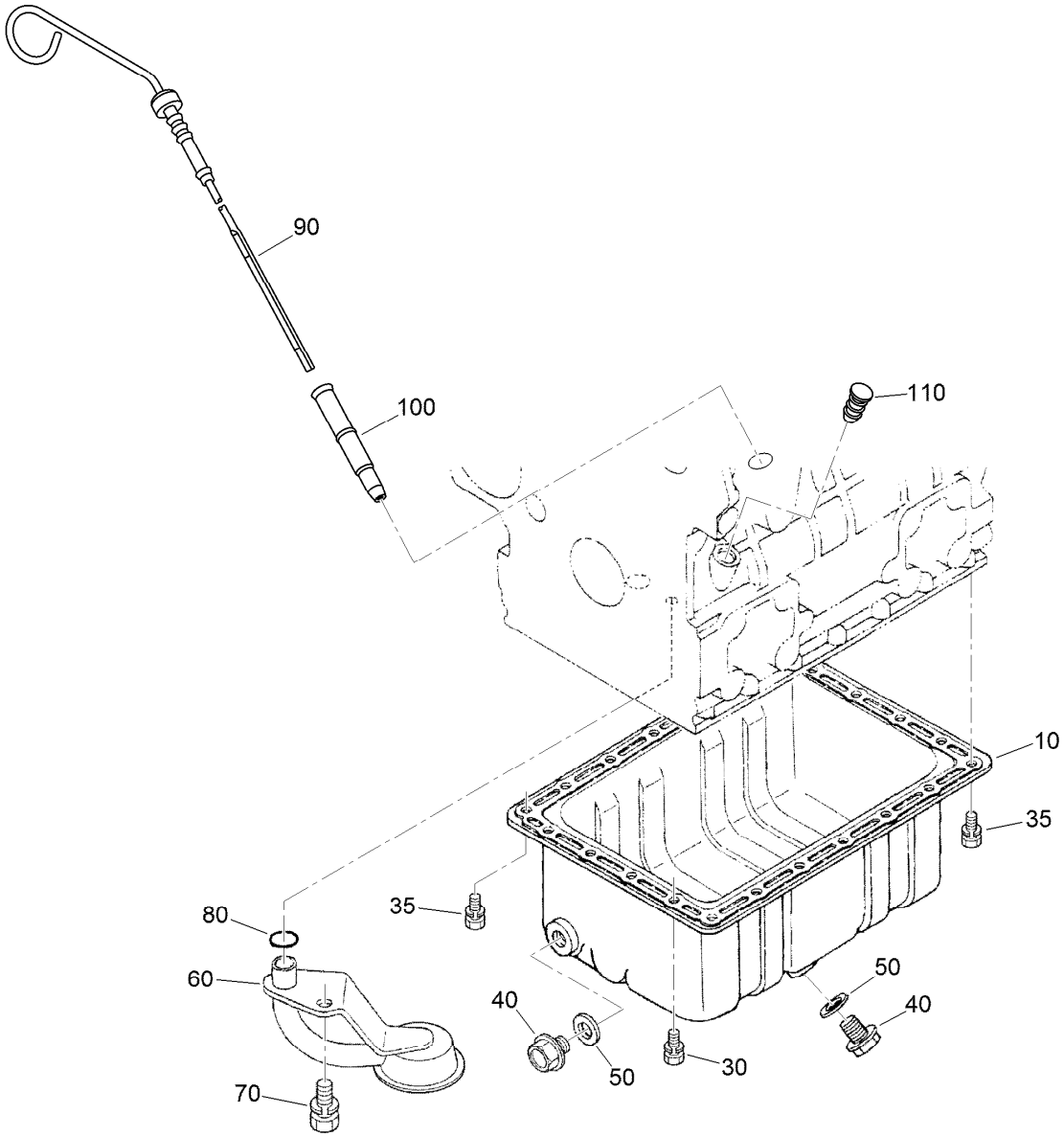

Oil Pan and Dipstick Assembly

Ref.	*Part Number*	*Qty.*	*Description*
10	98-9685	1	Pan-Oil
30	98-9351	20	Bolt
35	98-9351	2	Bolt
40	114-8151	2	Plug-Drain
50	98-7524	2	Gasket
60	108-1401	1	Base-Filter
70	98-7526	1	Bolt
80	105-3776	1	O-Ring
90	104-9348	1	Gauge-Oil
100	105-4580	1	Guide-Gauge, Oil
110	110-3720	1	Plug-Gauge, Oil

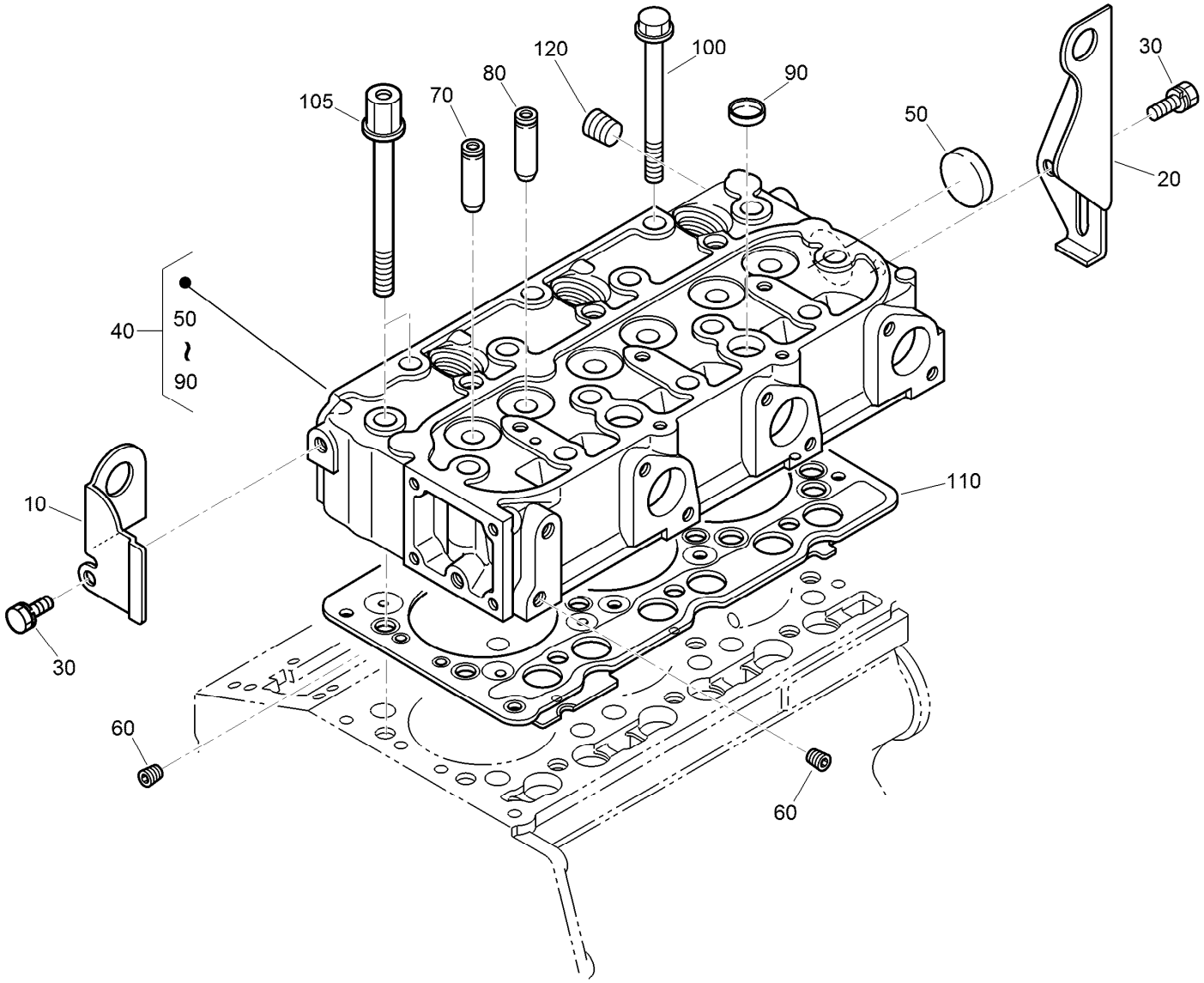

Cylinder Head Assembly

Ref.	Part Number	Qty.	Description
10	130-1231	1	Hook-Engine
20	98-9478	1	Hook-Engine
30	100-9195	2	Bolt
40	130-1544	1	Cylinder Head ASM
50	105-3705	1	Cap-Sealing
60	98-9687	2	Plug
70	107-9066	3	Guide-Valve, Inlet
80	107-9067	3	Guide-Valve, Exhaust
90	98-9389	2	Cap-Sealing
100	98-9479	12	Bolt-Head, Cylinder
105	98-9647	2	Bolt-Head, Cylinder
110	108-6573	1	Gasket-Head, Cylinder
120	98-9444	1	Plug

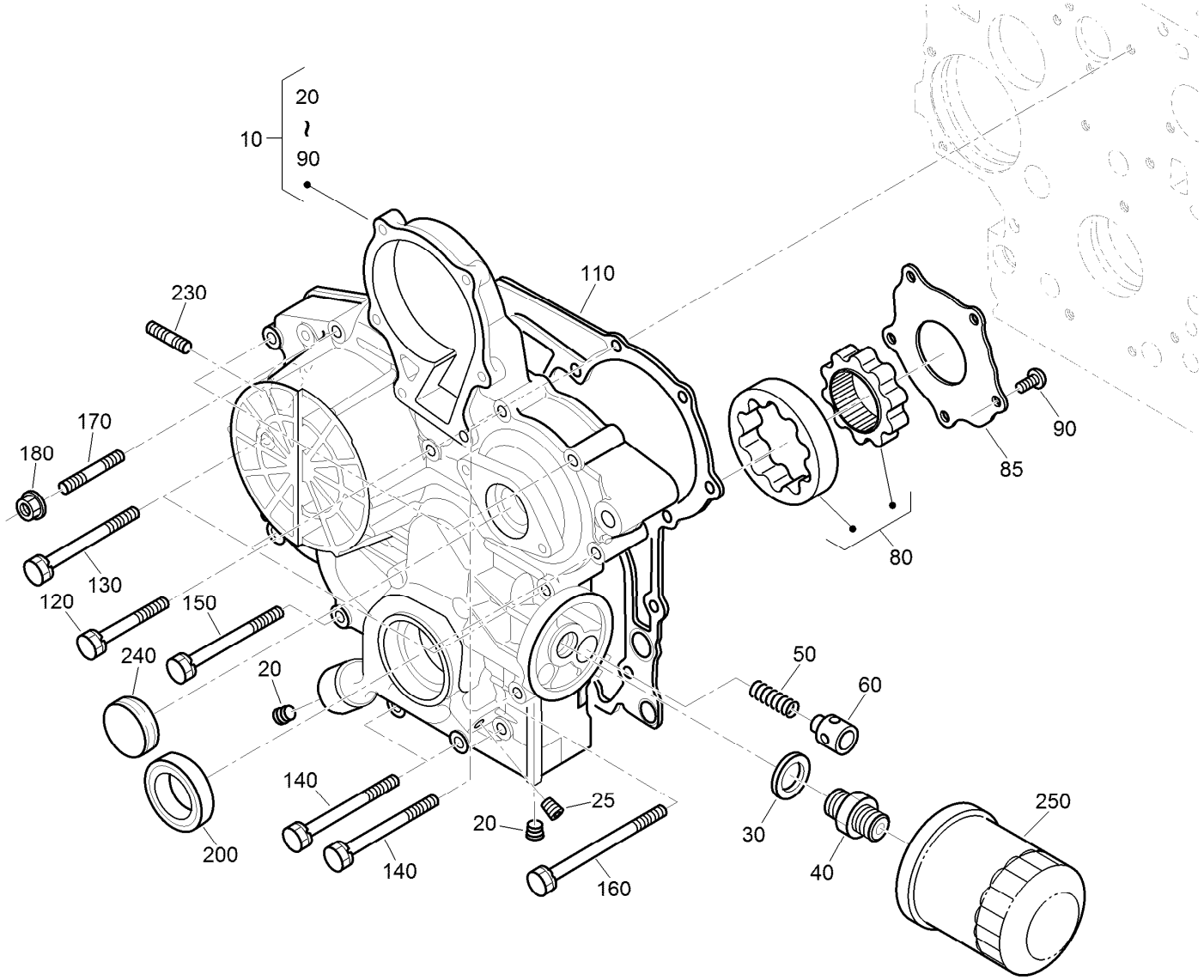

Gear Case and Oil Filter Cartridge Assembly

Ref.	Part Number	Qty.	Description
10	115-4105	1	Gear Case ASM
20	127-0425	2	Plug
25	98-7487	1	Plug
30	98-7562	1	Washer-Plain
40	98-9388	1	Joint-Pipe
50	130-1511	1	Spring
60	130-1510	1	Valve-Relief
80	130-1508	1	Rotor ASM
85	130-1509	1	Cover-Pump, Oil
90	130-1164	5	Screw-Binding
110	98-9633	1	Gasket-Case, Gear

Ref.	Part Number	Qty.	Description
120	100-1765	3	Bolt
130	125-9063	4	Bolt-Sems
140	98-9356	4	Bolt
150	107-9074	1	Bolt
160	99-3510	1	Bolt
170	105-3709	1	Stud
180	100-2203	1	Nut-Flange
200	119-8038	1	Seal-Oil
230	105-3710	2	Stud
240	99-3515	1	Plug-Gearcase
250	108-3841	1	Filter-Oil

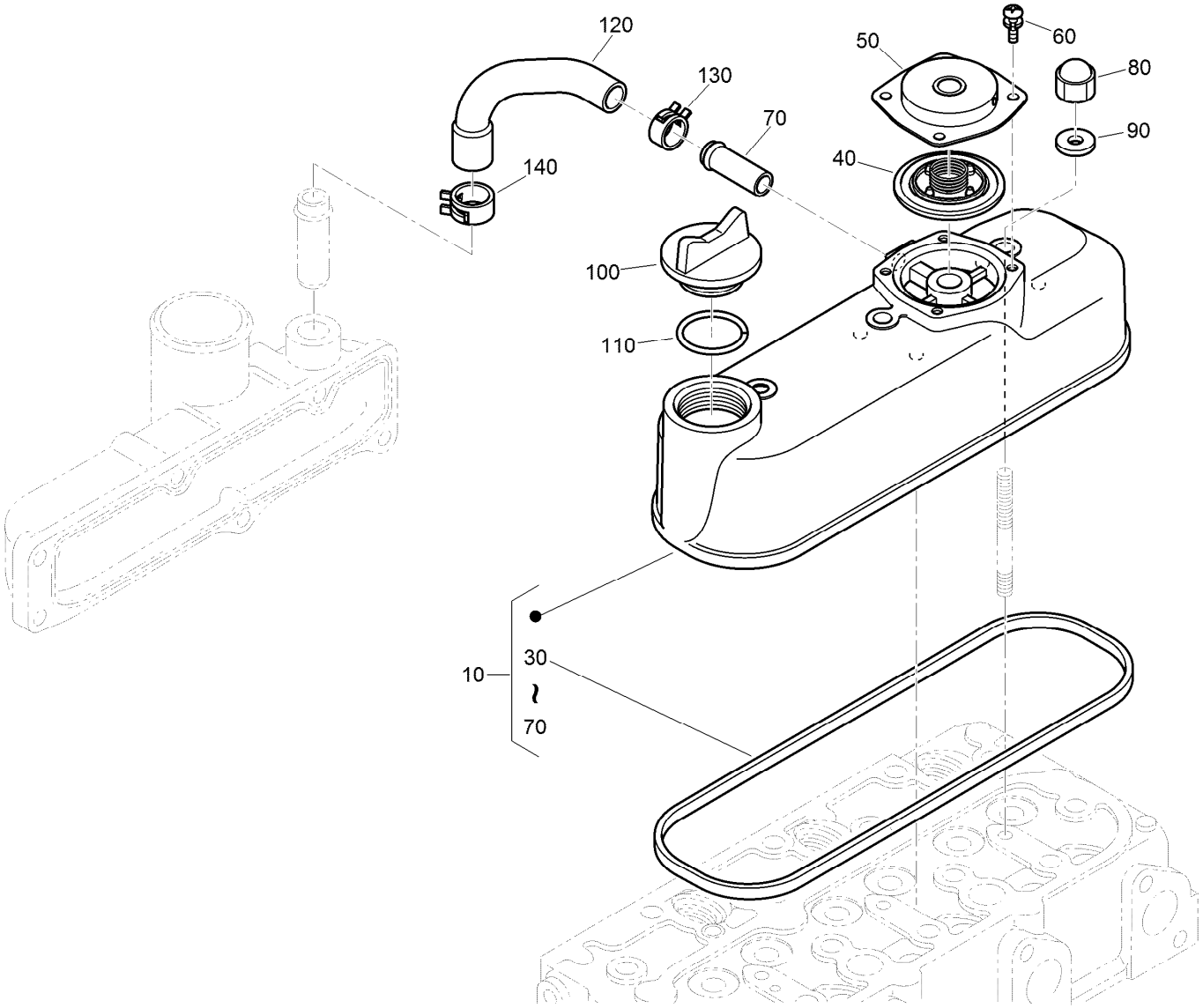

Cylinder Head Cover Assembly

Ref.	Part Number	Qty.	Description
10	139-4544	1	Cylinder Cover ASM
30	98-9615	1	Gasket-Cover, Head
40	110-3715	1	Valve-Breather
50	110-3714	1	Cover-Breather
60	98-9364	4	Screw (With Washer)
70	98-7766	1	Pipe-Return, Water
80	98-9455	3	Nut-Cap
90	98-9454	3	Gasket
100	107-9075	1	Plug-Filler, Oil
110	131-3834	1	O Ring
120	139-4545	1	Tube-Breather
130	108-2859	1	Clamp-Hose
140	108-2860	1	Clamp-Hose

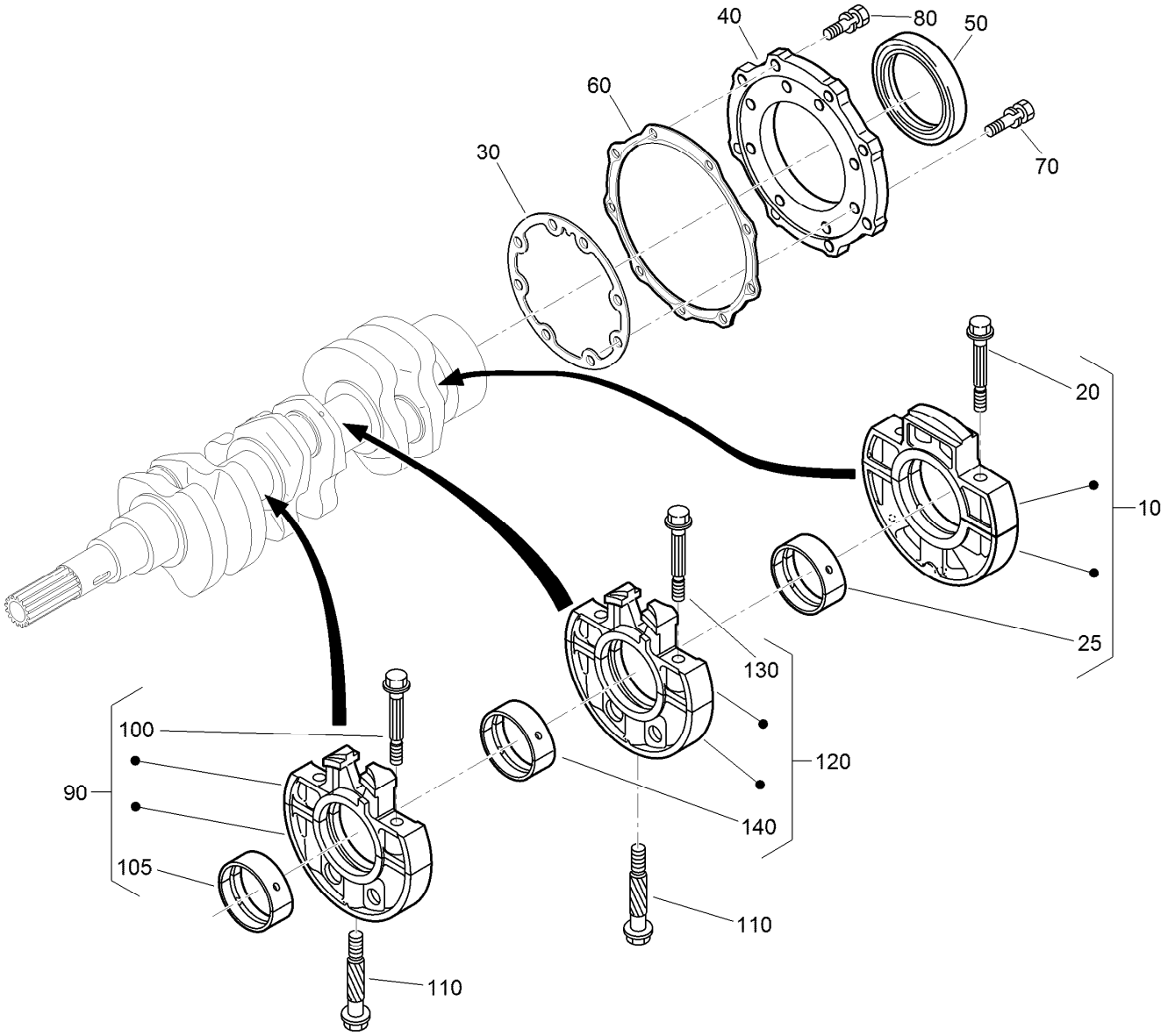

Main Bearing Case Assembly

Ref.	Part Number	Qty.	Description
10	139-4546	1	Bearing Case ASM
20	98-9484	2	Bolt-Case, Bearing
25	115-4121	1	Metal-Crankshaft (STD)
25	112-7039	1	Metal-Crankshaft (0.2Mm)
25	112-7040	1	Metal-Crankshaft (-0.4Mm)
30	131-6554	1	Gasket-Case, Bearing
40	112-7046	1	Cover-Case, Bearing
50	112-0180	1	Seal-Oil
60	112-7037	1	Gasket-Cover, Case
70	127-0441	8	Bolt
80	140-2467	9	Bolt

Ref.	Part Number	Qty.	Description
90	115-4106	1	Main Bearing Case ASM
100	98-9484	2	Bolt-Case, Bearing
105	98-9524	1	Metal-Crankshaft (STD Set)
105	127-0433	1	Metal-Crankshaft (-0.2MM)
105	98-9531	1	Bearing-Main (0.4MM)
110	98-9485	2	Bolt-Case, Bearing
120	115-4107	1	Main Bearing Case ASM
130	98-9484	2	Bolt-Case, Bearing
140	98-9524	1	Metal-Crankshaft (STD Set)
140	127-0433	1	Metal-Crankshaft (-0.2MM)
140	98-9531	1	Bearing-Main (0.4MM)

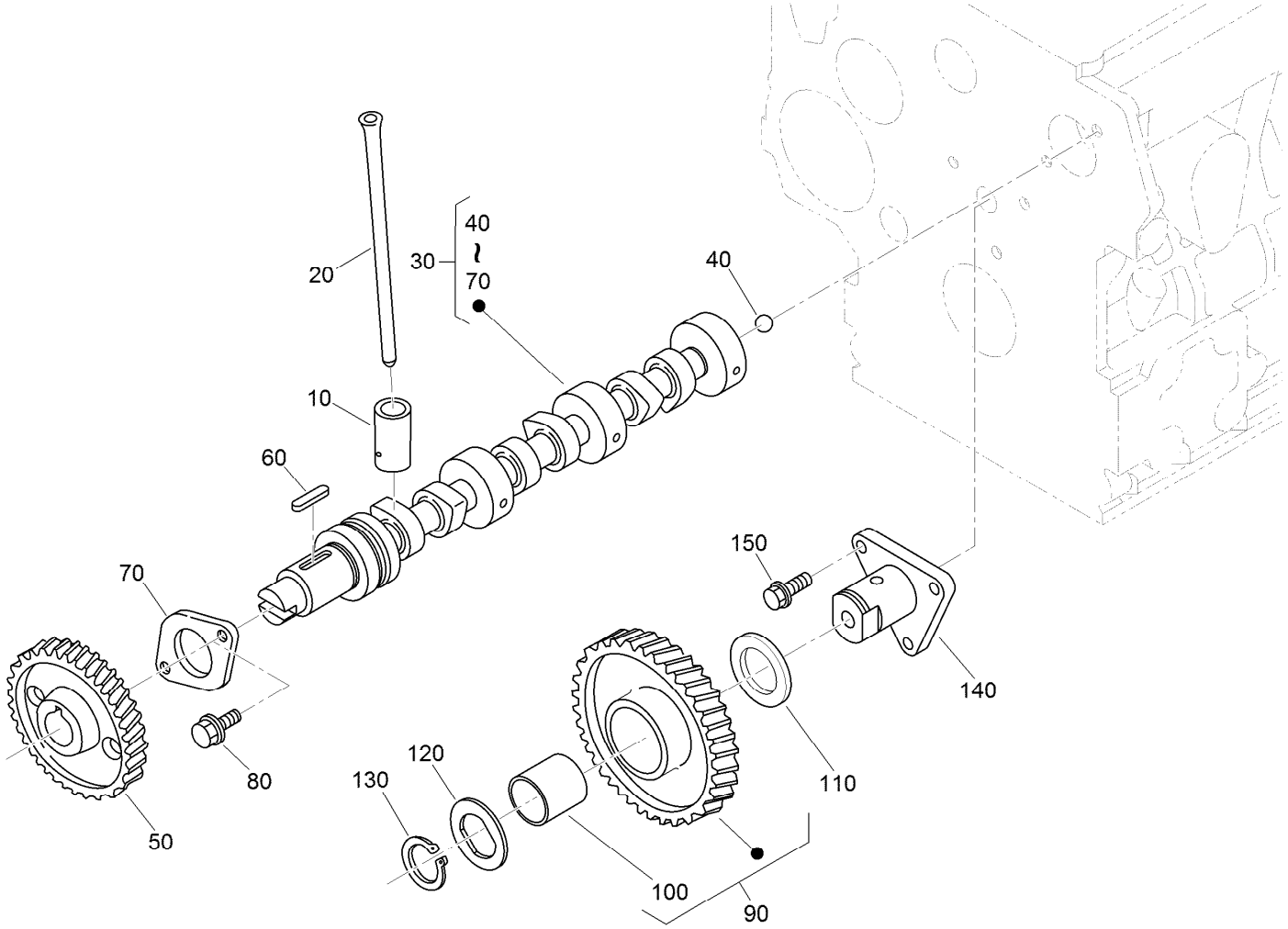

Camshaft and Idle Gear Shaft Assembly

Ref.	Part Number	Qty.	Description
10	112-0185	6	Tappet
20	127-0421	6	Rod-Push
30	130-1545	1	Camshaft ASM
40	110-3729	1	Ball
50	120-3116	1	Camshaft ASM
60	98-9378	1	Key-Feather
70	131-6555	1	Stopper (Camshaft)
80	98-7692	2	Bolt
90	117-7584	1	Idler Gear ASM
100	117-7585	1	Bushing-Gear, Idle
110	98-9535	1	Collar-Gear, Idle
120	98-9536	1	Collar-Gear, Idle
130	98-9534	1	Circlip-Gear, Idle
140	98-9533	1	Shaft-Gear, Idle
150	98-7692	3	Bolt

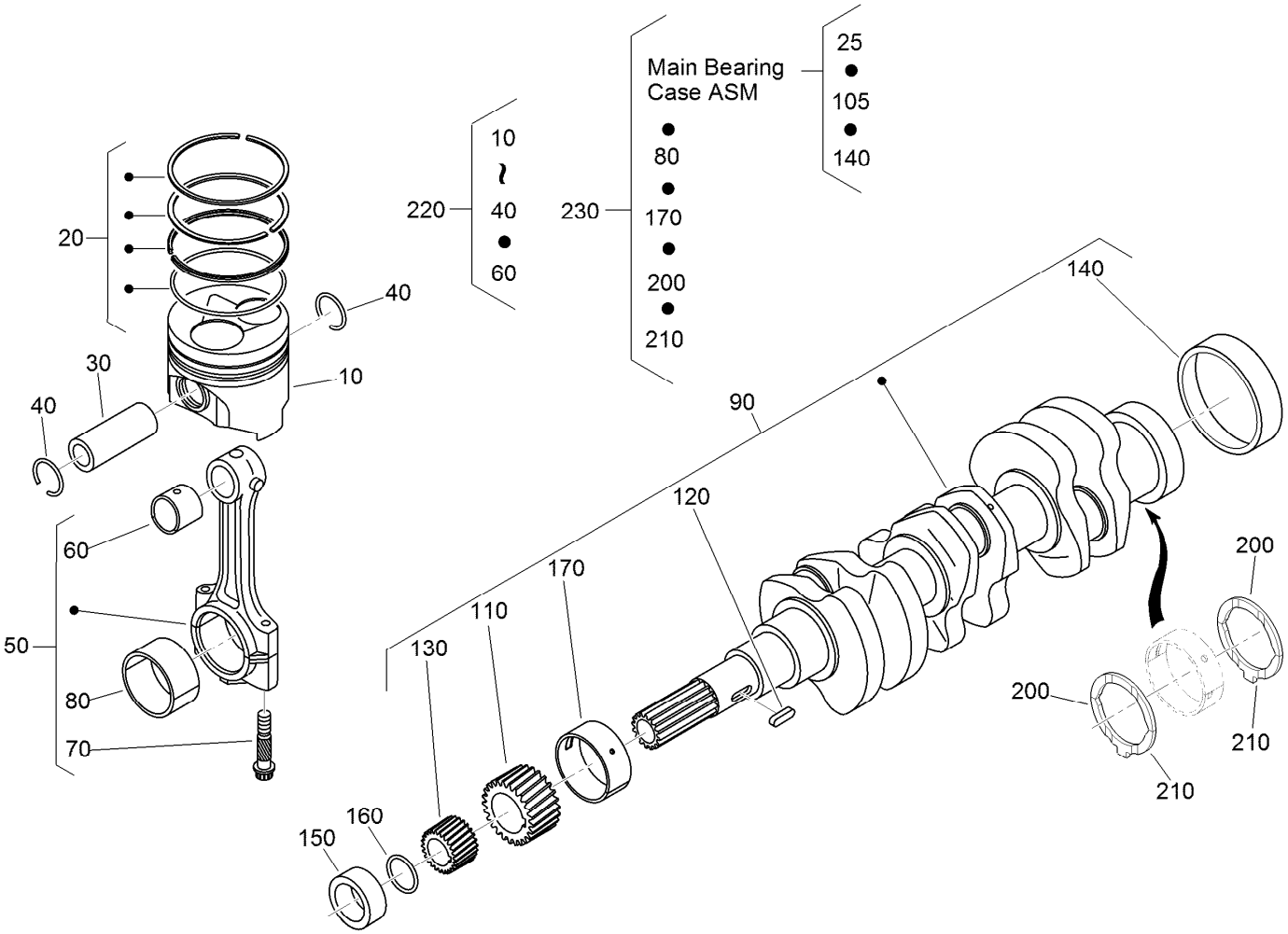

Piston and Crankshaft Assembly

Ref.	Part Number	Qty.	Description
10	130-1546	3	Piston (STD)
10	130-1549	3	Piston (+0.50MM)
20	130-1506	3	Piston Ring ASM (STD)
20	130-1507	3	Piston Ring ASM (+0.50MM)
30	98-9513	3	Pin-Piston
40	98-9514	6	Circlip-Pin, Piston
50	117-7586	3	Connecting Rod ASM
60	115-3014	3	Bushing-Pin, Piston
70	98-9517	6	Bolt-Rod, Connecting
80	98-9553	3	Bearing-Rod (STD)
80	98-9519	3	Bearing-Rod (-0.2MM)
80	117-7588	3	Metal-Crankpin (-0.4MM)
90	130-1375	1	Crankshaft ASM
110	117-7561	1	Gear-Crankshaft
120	98-9666	1	Key
130	127-0445	1	Gear-Drive, Oil Pump
140	98-9522	1	Sleeve-Crankshaft
150	127-0444	1	Collar-Crankshaft

Ref.	Part Number	Qty.	Description
160	105-3783	1	O-Ring
170	112-7005	1	Bearing-Main (STD)
170	98-9528	1	Bearing-Main (-0.2MM)
170	127-0432	1	Metal-Crankshaft (-0.4MM)
200	98-9413	2	Bearing-Thrust (STD)
200	127-0416	2	Metal-Side (+0.2Mm)
200	127-0417	2	Metal-Side (+0.40Mm)
210	98-9688	2	Bearing-Thrust (STD)
210	127-0437	2	Metal-Side (+0.2MM)
210	127-0438	2	Metal-Side (+0.40MM)
220	130-1547	3	Piston Kit
220	130-1548	3	Piston Kit
230	130-1501	1	Engine Metal Kit (STD)
230	130-1498	1	Engine Metal Kit (-0.20Mm/+0.20Mm)
230	130-1499	1	Engine Metal Kit (-0.40Mm/+0.40Mm)

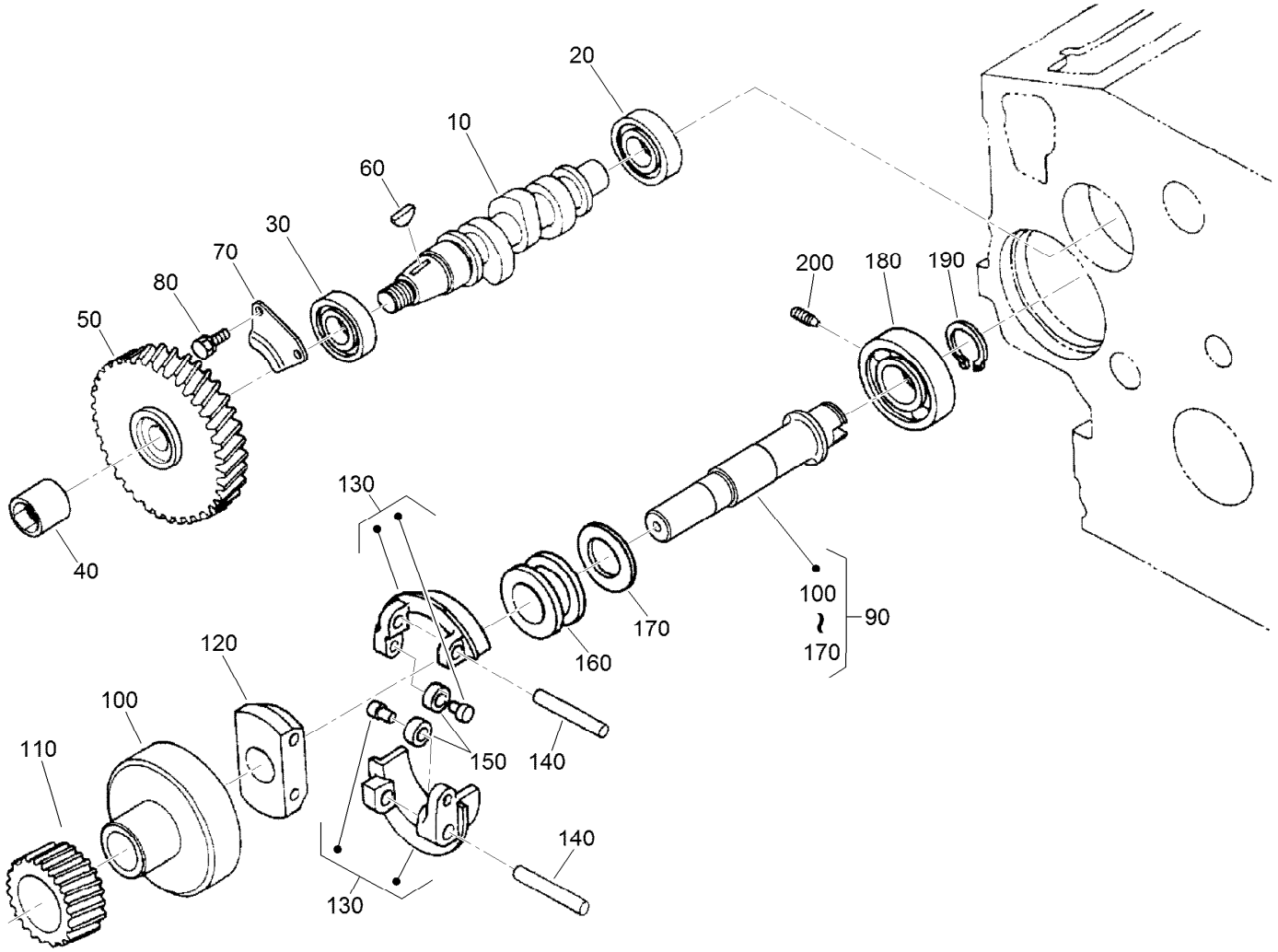

Fuel Camshaft and Governor Shaft Assembly

Ref.	Part Number	Qty.	Description
10	139-4547	1	Camshaft-Fuel
20	107-9077	1	Bearing-Ball
30	107-9078	1	Bearing-Ball
40	130-1512	1	Nut
50	120-2562	1	Gear-Pump, Injection
60	98-9595	1	Key-Woodruff
70	98-9511	1	Stopper-Fuel, Camshaft
80	98-7692	2	Bolt
90	98-9644	1	Governor Shaft ASM
100	98-9562	1	Holder-Gear, Governor

Ref.	Part Number	Qty.	Description
110	98-9673	1	Gear-Governor
120	98-9561	1	Holder-Weight, Governor
130	98-9559	2	Governor Weight ASM
140	98-9560	2	Shaft-Weight, Governor
150	98-9692	2	Roller
160	98-9563	1	Sleeve-Governor
170	98-9564	1	Washer-Thrust
180	107-9079	1	Bearing-Ball
190	98-9657	1	Circlip-Shaft, Governor
200	98-9565	1	Screw-Set

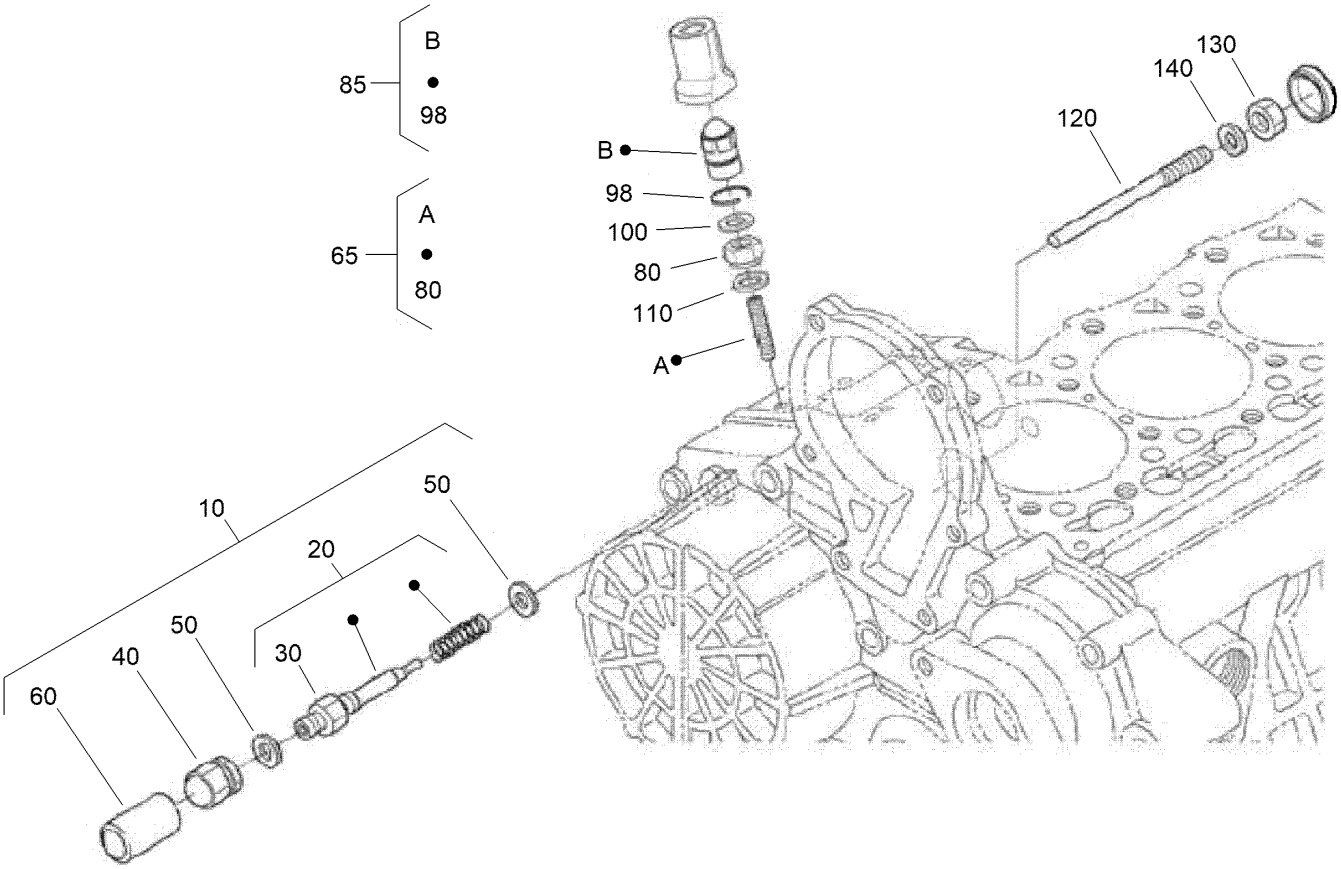

Idle Apparatus and Stop Solenoid Assembly

Ref.	*Part Number*	*Qty.*	*Description*
10	98-9678	1	Idle Apparatus ASM
20	112-7014	1	Adjusting Bolt ASM
30	98-9439	1	Nut
40	112-0181	1	Nut
50	98-7654	2	Gasket
60	98-7656	1	Cap
65	140-2470	1	Adjusting Bolt ASM
80	139-4548	1	Nut-Lock
85	140-2471	1	Cap Nut ASM
98	140-2472	1	Circlip-Int
100	98-7654	1	Gasket
110	107-9081	1	Gasket
120	131-6556	1	Bolt
130	98-7572	1	Nut
140	98-7654	1	Gasket

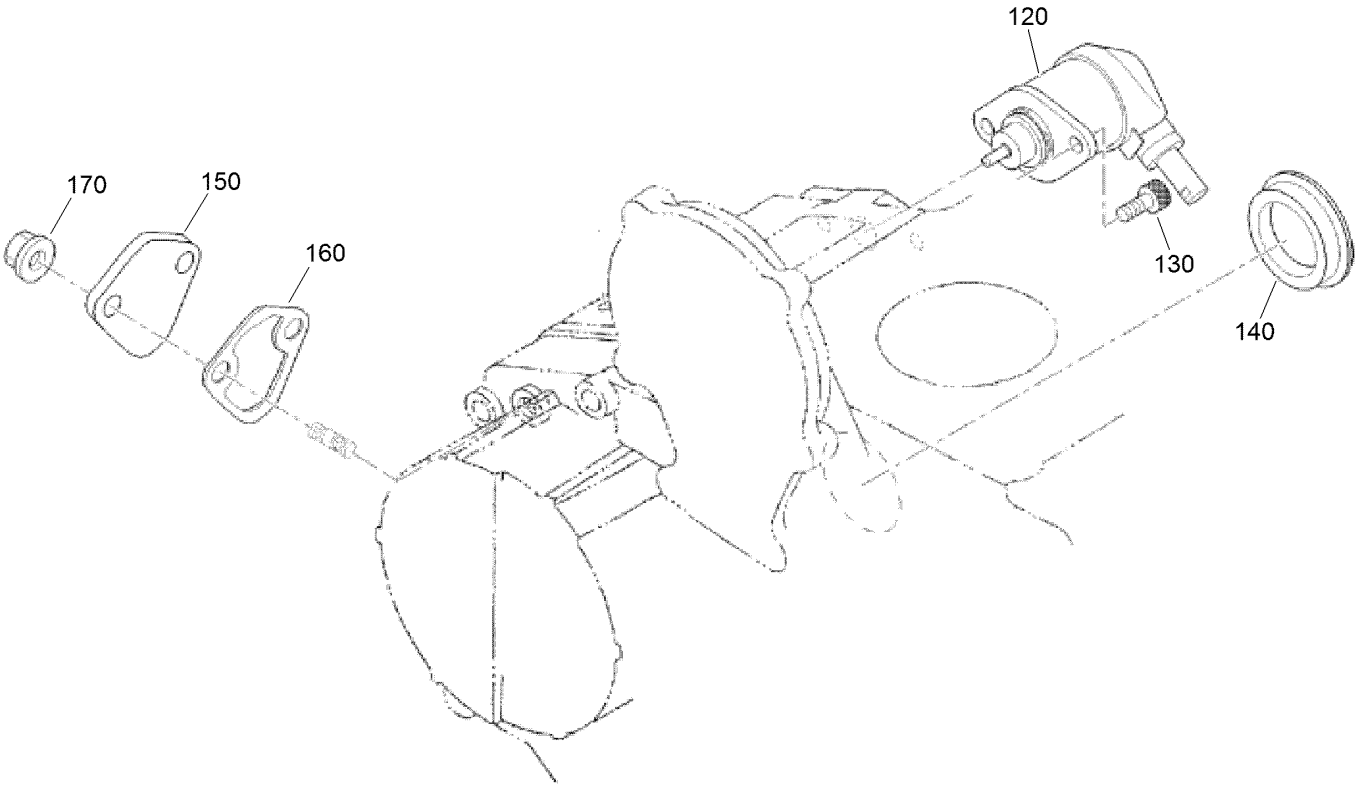

Solenoid Assembly

Ref.	*Part Number*	*Qty.*	*Description*
120	104-5155	1	Solenoid-Stop
130	130-1155	2	Screw-HSH
140	112-7016	1	Cover-Pump
150	99-3514	1	Cover
160	117-7562	1	Gasket-Pump, Fuel
170	100-2203	2	Nut-Flange

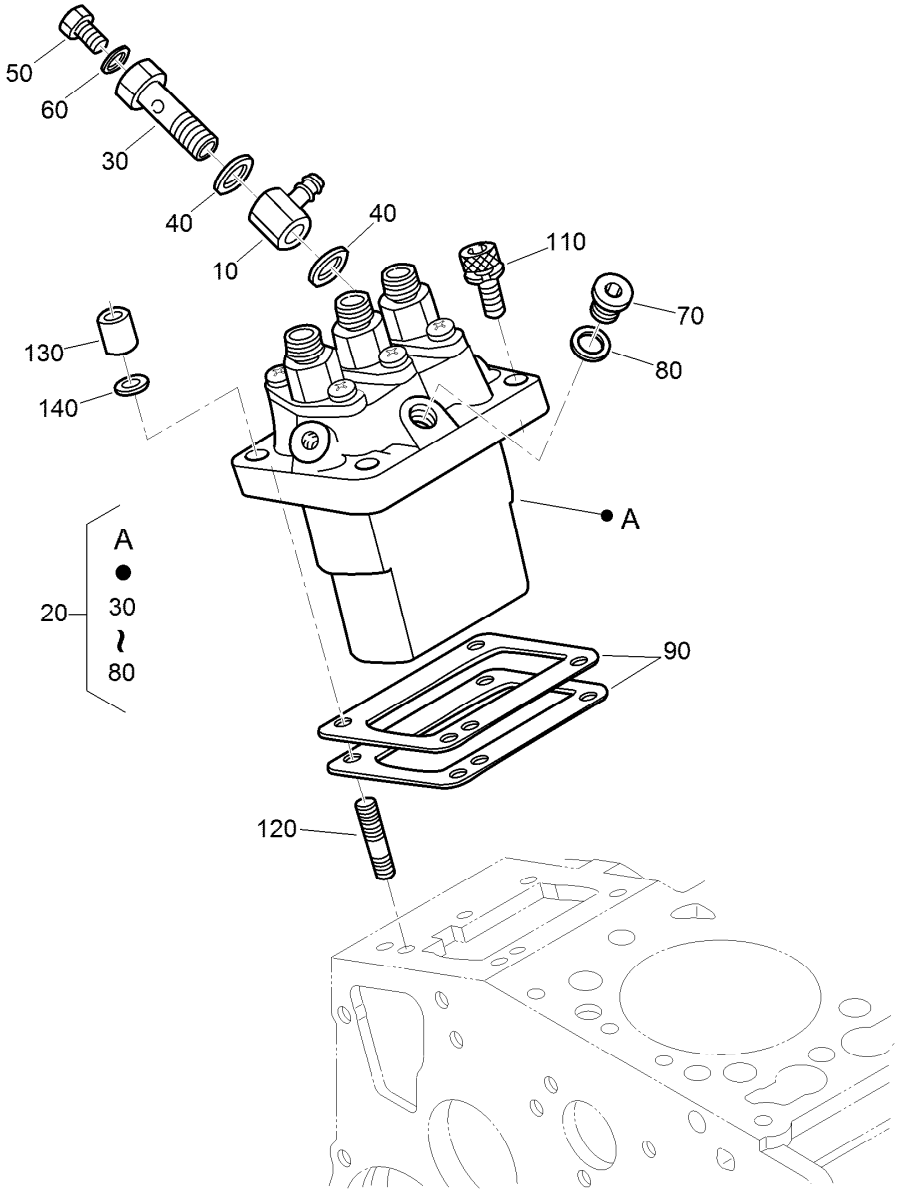

Injection Pump Assembly

Ref.	Part Number	Qty.	Description
10	139-4549	1	Joint-Eye
20	98-9643	1	Injection Pump ASM
30	98-9464	1	Bolt-Joint
40	98-9445	2	Gasket
50	98-9430	1	Screw
60	98-9446	1	Gasket
70	98-9466	1	Plug
80	98-9451	1	Gasket
90	98-9456	1	Shim-Injection (0.20MM)

Ref.	Part Number	Qty.	Description
90	98-9457	1	Shim-Injection (0.25MM)
90	98-9458	1	Shim-Injection (0.30MM)
90	115-3046	1	Shim-Injection (0.35MM)
90	115-3045	1	Shim-Injection (0.175MM)
110	117-7564	2	Bolt-Hex Soc HD
120	98-9438	2	Stud
130	98-9440	2	Nut-Cap
140	98-7699	2	Washer-Spring

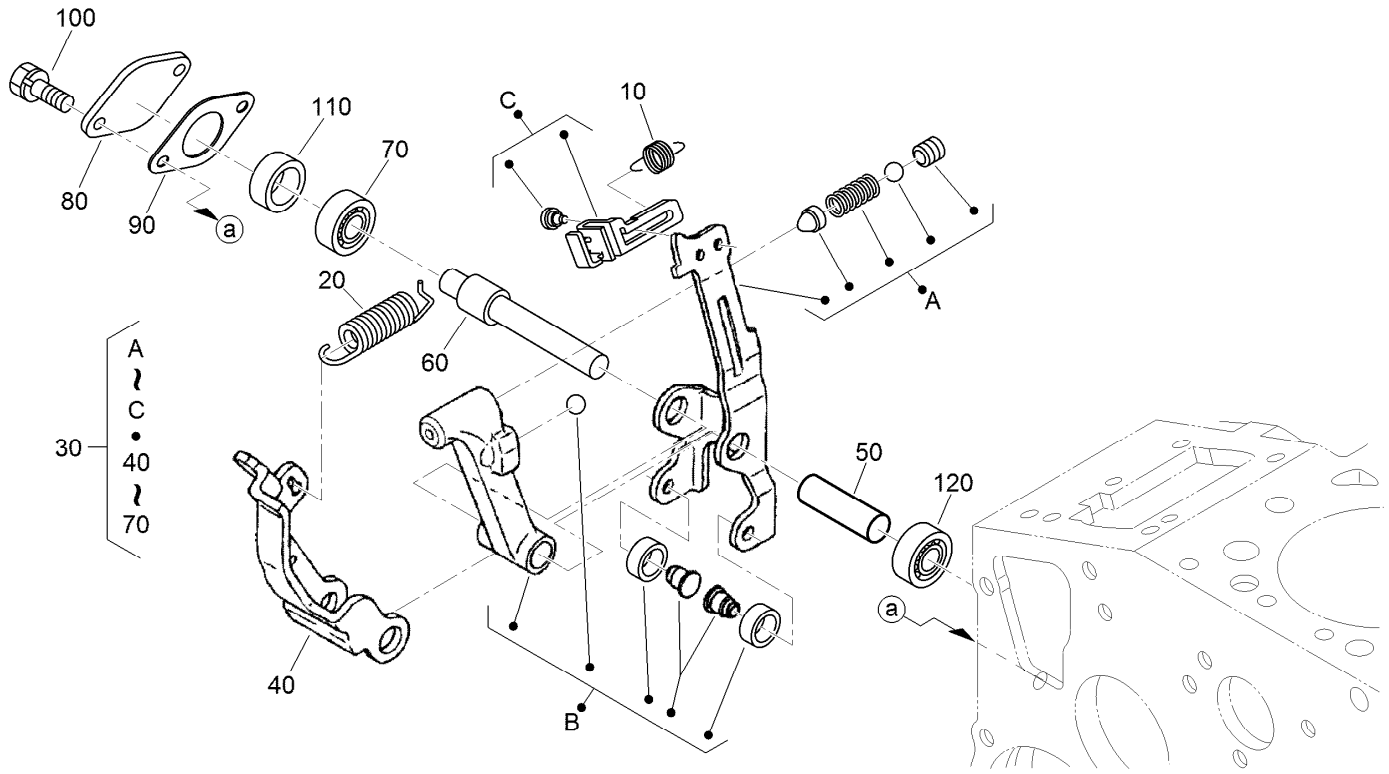

Governor Assembly

Ref.	Part Number	Qty.	Description
10	105-3786	1	Spring-Start
20	98-9681	1	Spring-Governor
30	115-4502	1	Fork Lever ASM
40	107-9084	1	Lever-Fork
50	107-9085	1	Shaft-Lever, Fork
60	107-9086	1	Shaft-Lever, Fork
70	98-9570	1	Bearing-Miniaturize
80	115-4122	1	Cover-Shaft, Fork Lever
90	98-9682	1	Gasket
100	98-9350	2	Bolt
110	98-9567	1	Collar
120	98-9571	1	Bearing-Miniaturize

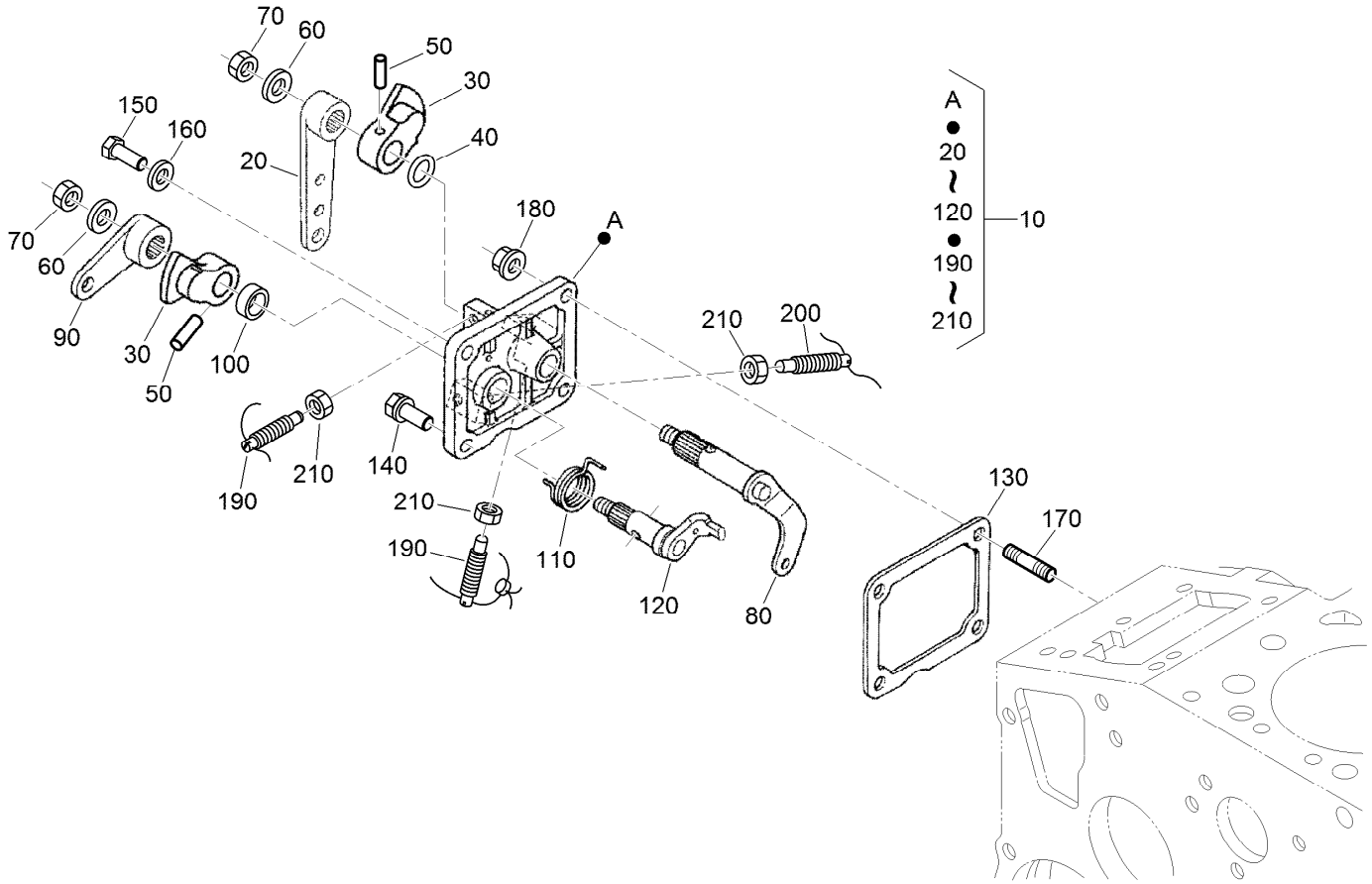

Speed Control Plate Assembly

Ref.	Part Number	Qty.	Description
10	105-3735	1	Control Plate ASM
20	98-9662	1	Lever-Control, Speed
30	98-9572	2	Lever-Control, Speed
40	105-3788	1	O-Ring
50	98-7602	2	Pin-Spring
60	98-9594	2	Washer-Plain
70	98-9589	2	Nut
80	98-9658	1	Governor Lever ASM
90	98-9663	1	Lever-Stop, Engine
100	98-7601	1	Seal-Oil
110	98-9472	1	Spring-Return

Ref.	Part Number	Qty.	Description
120	98-9664	1	Shaft-Lever, Stop
130	98-9637	1	Gasket
140	98-7692	1	Bolt
150	127-0401	1	Bolt-Hex
160	98-7654	1	Gasket
170	105-3710	2	Stud
180	100-2203	2	Nut-Flange
190	117-7565	2	Bolt-Adjusting
200	117-7566	1	Bolt-Adjusting
210	98-7572	3	Nut

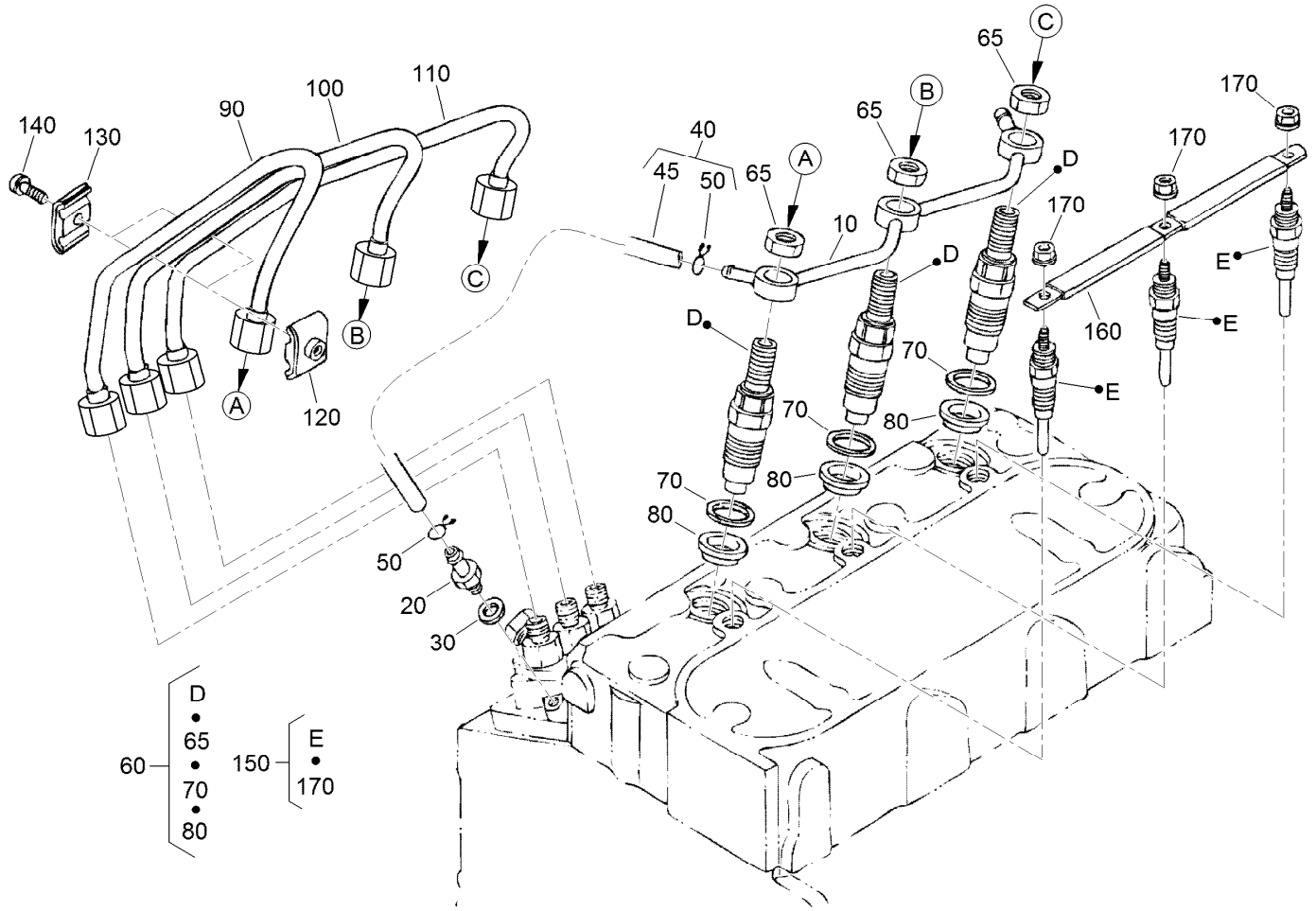

Nozzle Holder and Glow Plug Assembly

Ref.	Part Number	Qty.	Description
10	98-9620	1	Overflow Pipe ASM
20	98-9431	1	Screw-Bleeder, Air
30	98-7654	1	Gasket
40	140-2456	1	Overflow Pipe ASM
45	140-2457	1	Pipe-Overflow
50	98-7671	2	Clip-Pipe
60	115-3018	3	Nozzle Holder Kit
65	121-2411	3	Nut
70	98-7676	3	Gasket
80	98-7677	3	Seal-Heat

Ref.	Part Number	Qty.	Description
90	98-9622	1	Pipe-Injection
100	98-9654	1	Pipe-Injection
110	98-9655	1	Pipe-Injection
120	98-7682	2	Clamp-Pipe
130	98-7683	2	Clamp-Pipe
140	98-7684	2	Screw (W/Washer)
150	130-1411	3	Plug-Glow
160	98-9631	1	Cord-Plug, Glow
170	99-8377	3	Nut-Flange

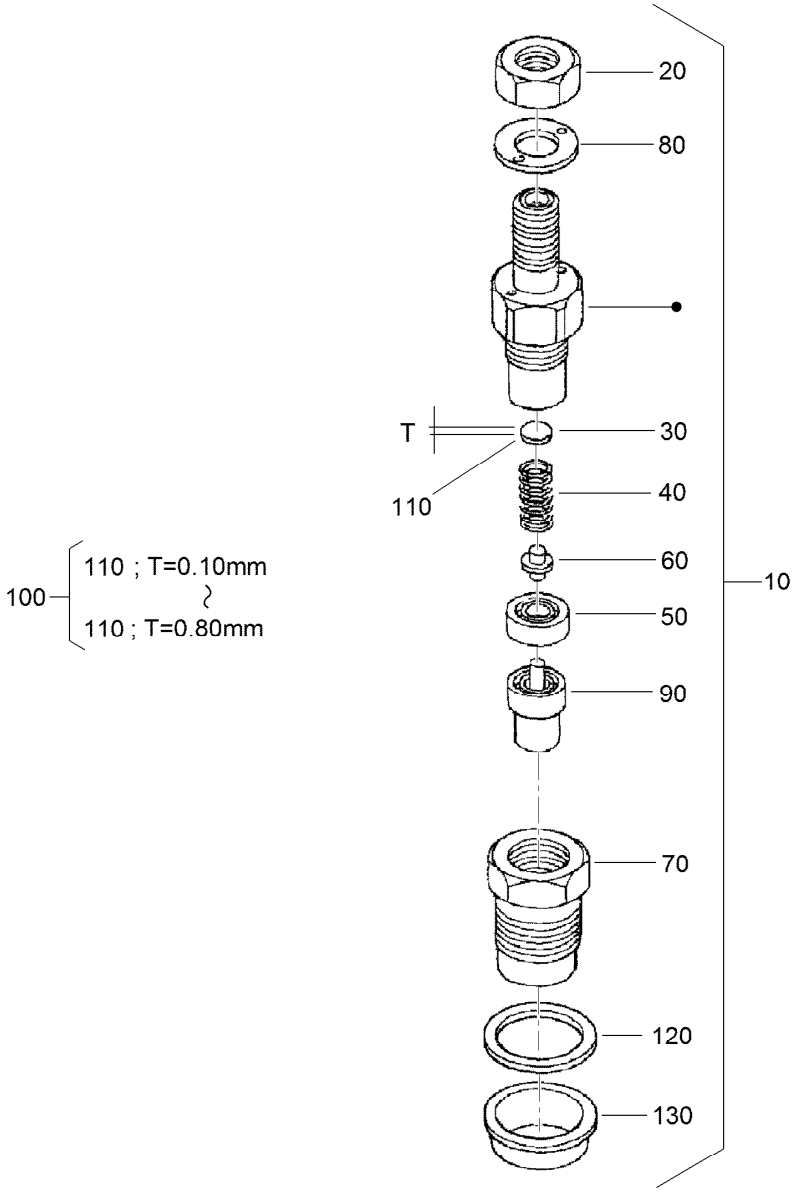

Nozzle Holder Assembly

Ref.	Part Number	Qty.	Description
10	115-3018	3	Nozzle Holder Kit
20	121-2411	3	Nut
30	99-8302	3	Washer-Adjusting
40	99-8303	3	Spring-Nozzle
50	99-8304	3	Spacer-Distance
60	99-8305	3	Rod-Push
70	99-8306	3	Nut-Nozzle
80	99-8307	3	Washer-Plain
90	115-3020	3	Piece-Nozzle
100	99-8309	3	Adjusting Washer ASM
110	99-8310	3	Washer-Adjust (0.10MM)

Ref.	Part Number	Qty.	Description
110	99-8311	3	Washer-Adjust (0.20MM)
110	99-8312	3	Washer-Adjust (0.30MM)
110	99-8313	3	Washer-Adjust (0.40MM)
110	99-8314	3	Washer-Adjust (0.50MM)
110	99-8315	3	Washer-Adjust (0.52MM)
110	99-8316	3	Washer-Adjust (0.54MM)
110	99-8317	3	Washer-Adjust (0.56MM)
110	99-8318	3	Washer-Adjust (0.58MM)
110	99-8319	3	Washer-Adjust (0.80MM)
120	98-7676	3	Gasket
130	98-7677	3	Seal-Heat

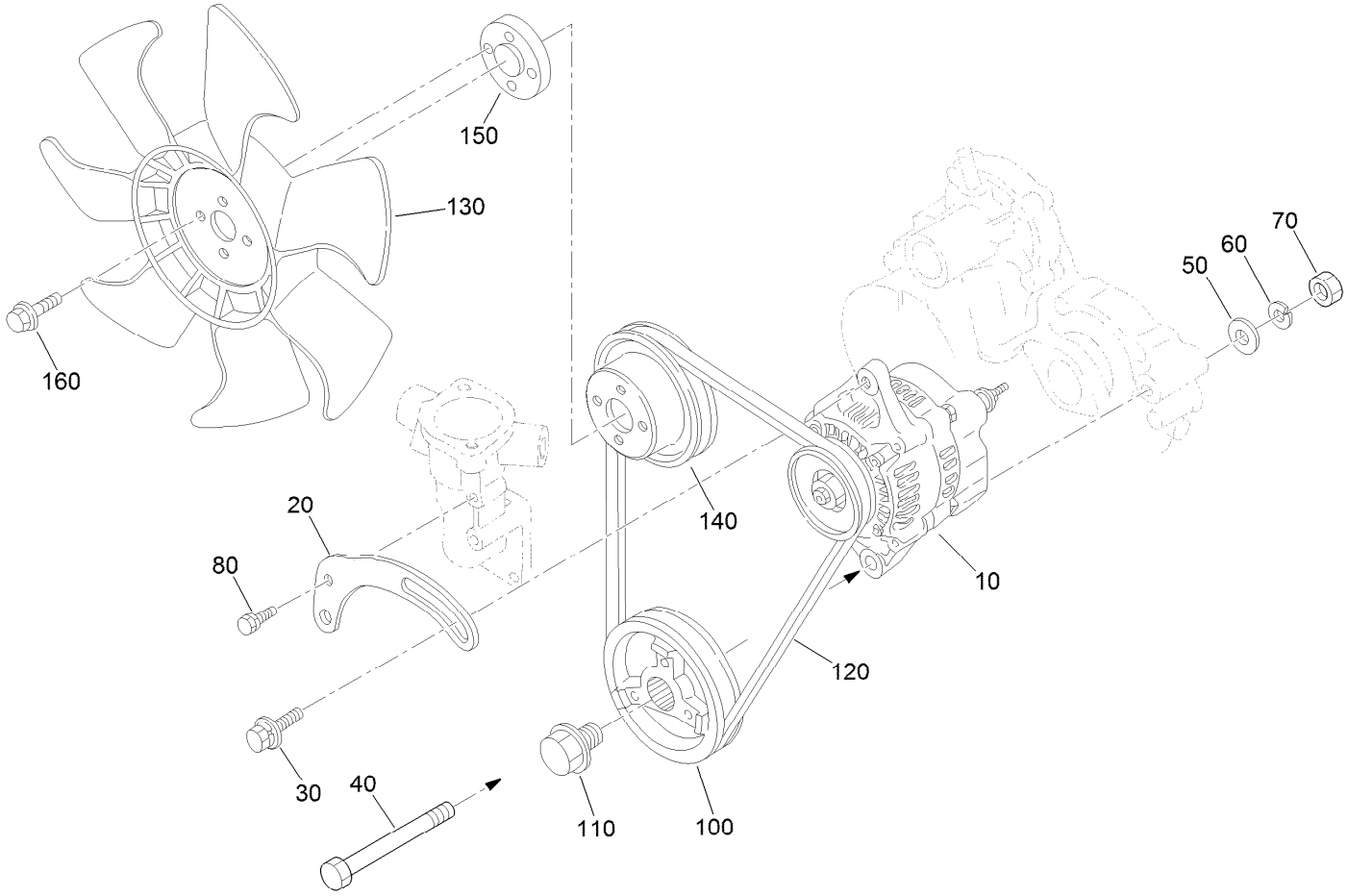

Alternator, Pulley and Fan Assembly

Ref.	Part Number	Qty.	Description
10	131-6557	1	Alternator ASM
20	112-7047	1	Stay-Dynamo
30	108-7088	1	Bolt
40	98-9360	1	Bolt
50	98-9366	1	Washer-Plain
60	98-7738	1	Washer-Spring
70	98-7737	1	Nut
80	98-7692	1	Bolt
100	98-9473	1	Pulley-Drive, Fan
110	98-9585	1	Bolt
120	104-3494	1	Belt-V
130	104-4246	1	Fan-Engine
140	130-1567	1	Pulley-Fan
150	108-2872	1	Collar-Fan
160	108-2873	4	Bolt-Flange

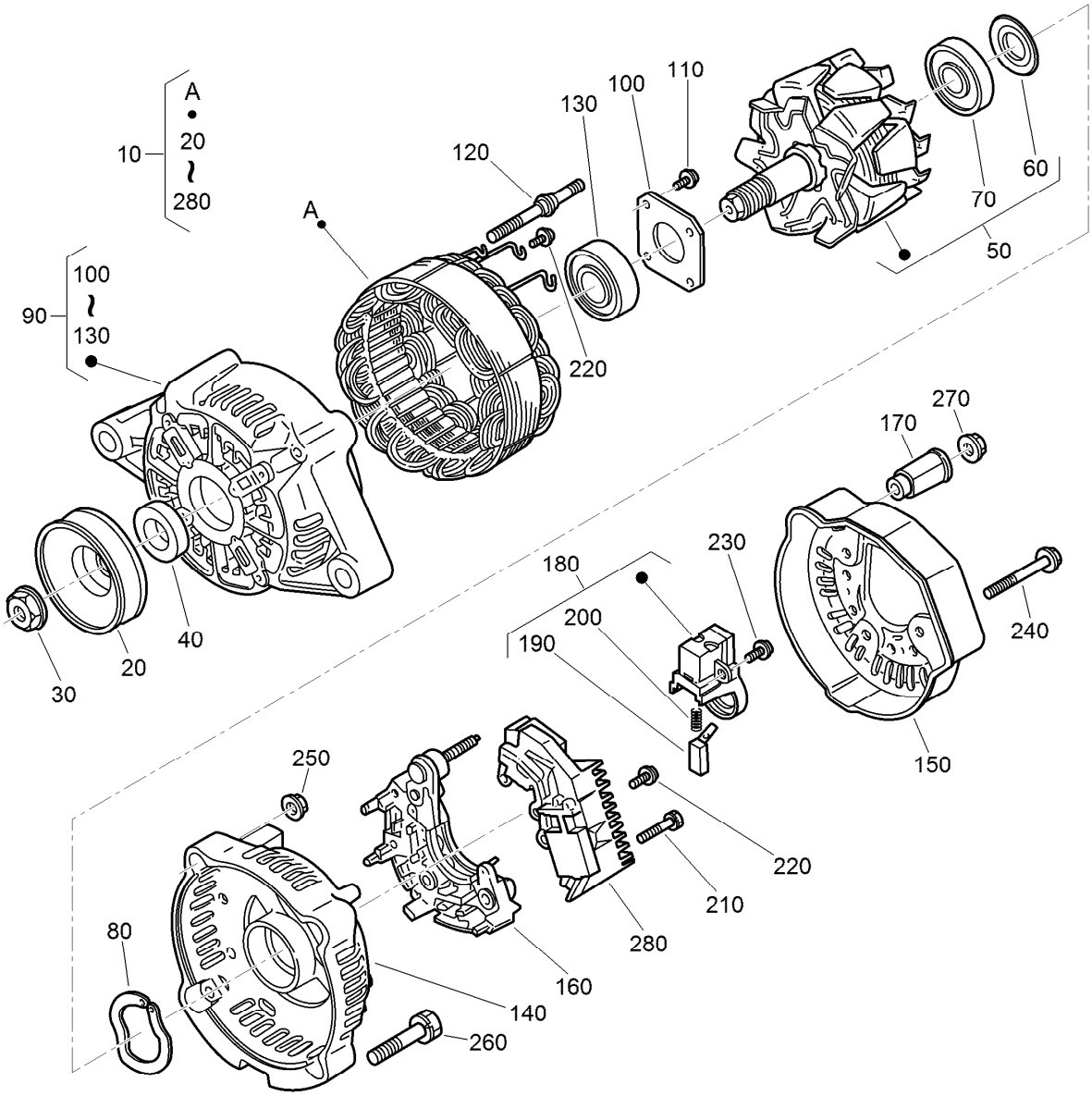

Alternator Components Assembly

Ref.	Part Number	Qty.	Description
10	131-6557	1	Alternator ASM
20	98-9453	1	Pulley-Dynamo
30	98-7708	1	Nut
40	98-7709	1	Collar
50	107-0136	1	Rotor ASM
60	98-7711	1	Cover-Bearing
70	107-0138	1	Bearing-Ball
80	98-7713	1	Washer-Thrust
90	131-6559	1	Frame-End, Drive
100	98-7715	1	Plate-Retainer
110	98-7716	4	Screw-Head, Round
120	98-7717	2	Bolt-Through
130	133-2811	1	Bearing
140	107-9087	1	Frame-End

Ref.	Part Number	Qty.	Description
150	107-0140	1	Cover-End
160	127-1612	1	Rectifier ASM
170	98-7722	1	Bushing-Insulation
180	107-0141	1	Brush Holder ASM
190	98-7724	2	Brush
200	98-7725	2	Spring-Brush
210	98-7726	2	Screw-Head, Round
220	98-7727	6	Screw-Head, Round
230	98-7728	1	Screw-Head, Round
240	98-7729	3	Bolt
250	98-7730	2	Nut
260	98-7731	2	Bolt
270	98-7732	1	Nut
280	140-2458	1	Regulator ASM

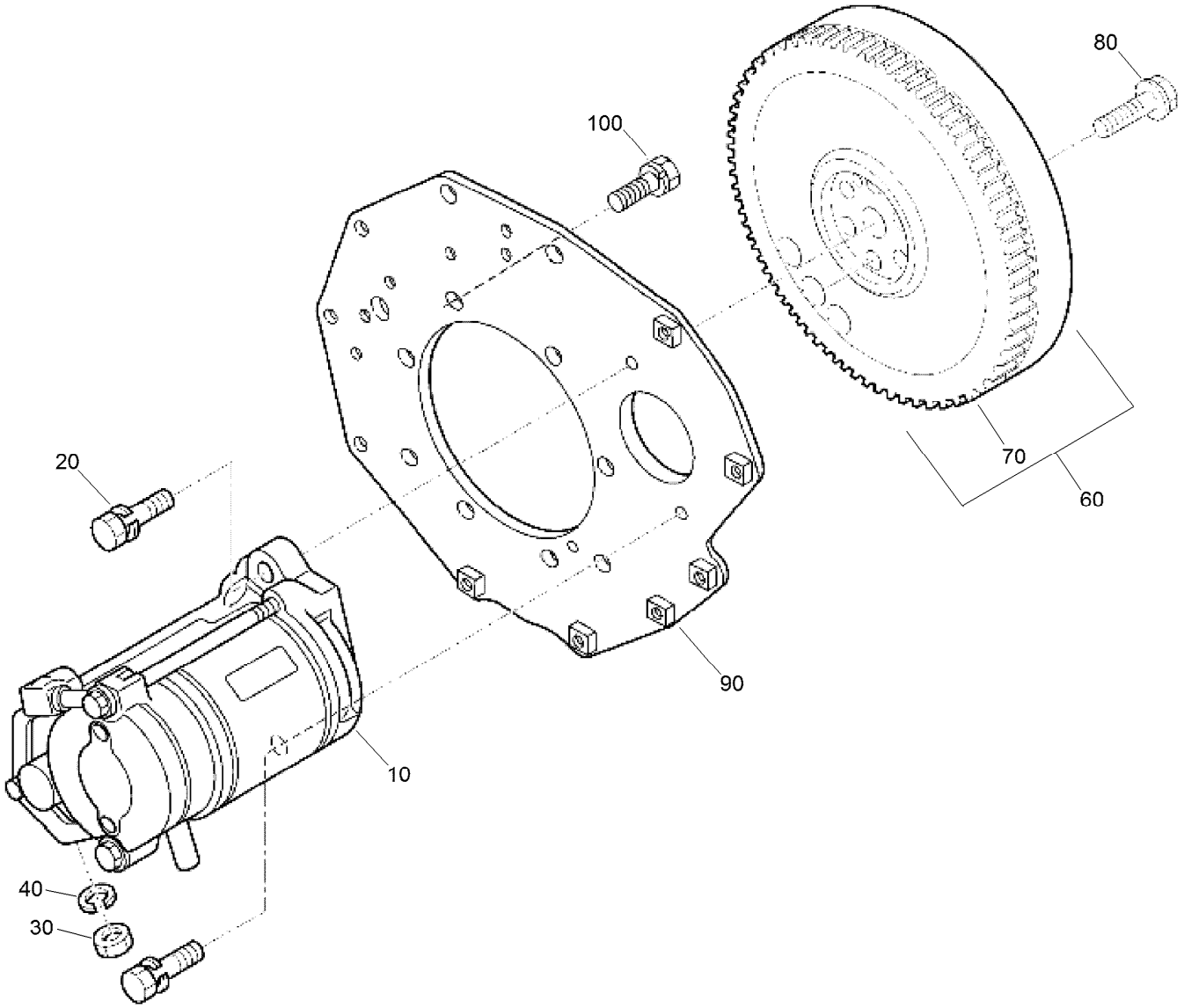

Starter and Flywheel Assembly

Ref.	*Part Number*	*Qty.*	*Description*
10	98-9705	1	Starter ASM
20	98-7697	2	Bolt
30	98-7534	1	Nut
40	105-2893	1	Washer-Spring
60	105-3784	1	Flywheel ASM
70	115-3015	1	Gear-Ring
80	98-9537	6	Bolt-Flywheel
90	98-9486	1	Plate-End, Rear
100	98-9392	8	Bolt

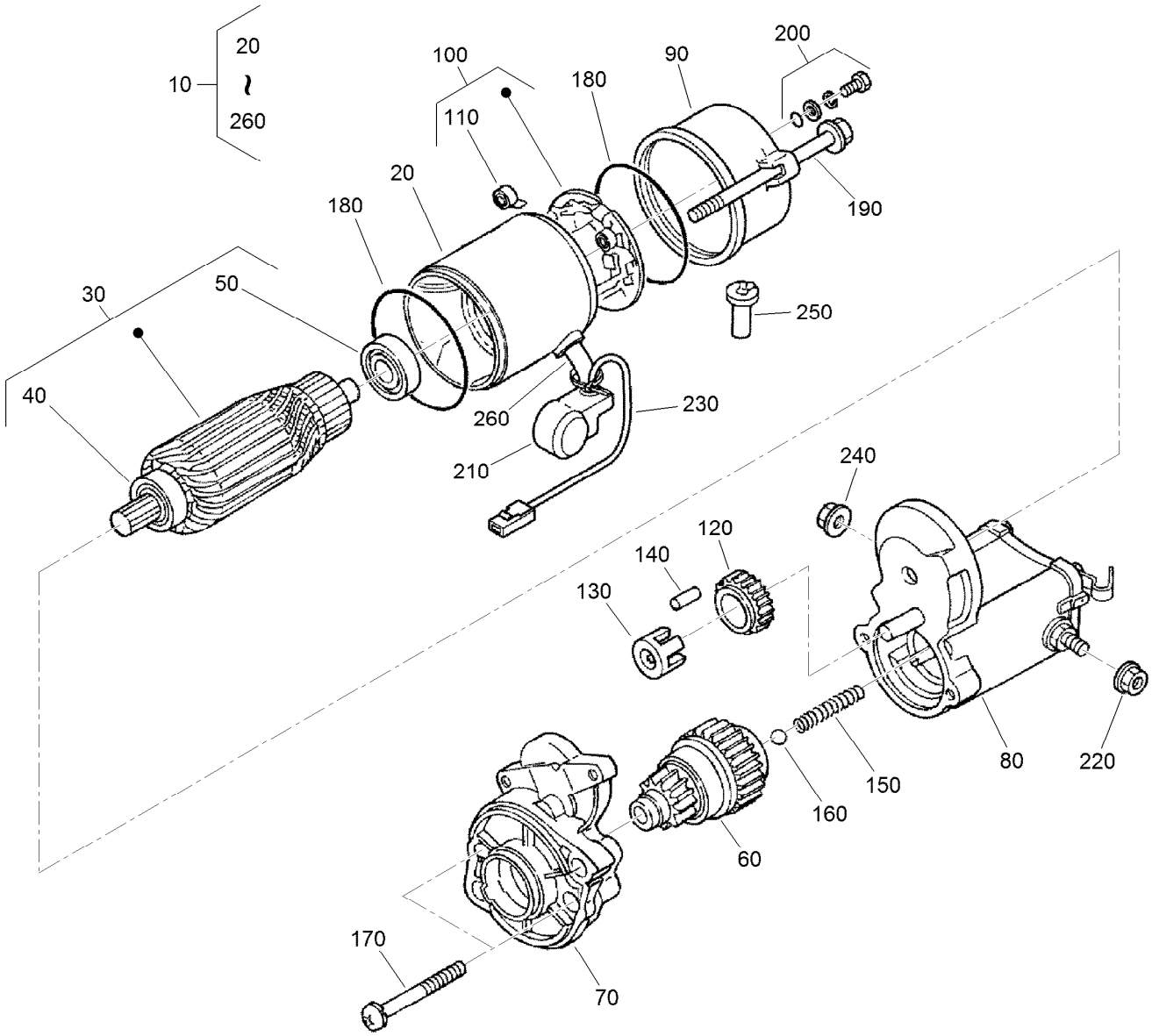

Starter Component Assembly

Ref.	Part Number	Qty.	Description
10	98-9705	1	Starter ASM
20	104-8608	1	Yoke ASM
30	98-7742	1	Armature ASM
40	98-7744	1	Bearing
50	98-7743	1	Bearing
60	99-8373	1	Clutch-Running, Over
70	99-8374	1	Frame-End, Drive
80	105-3746	1	Magnetic Switch ASM
90	98-7748	1	Frame-End
100	98-7749	1	Brush Holder ASM
110	98-7750	4	Spring-Brush
120	98-7751	1	Gear
130	98-7752	1	Retainer

Ref.	Part Number	Qty.	Description
140	98-7753	5	Roller
150	98-7754	1	Spring
160	98-7755	1	Ball
170	98-7756	2	Bolt
180	98-7757	2	O-Ring
190	100-9240	2	Bolt
200	98-7758	2	Bolt ASM
210	99-8375	1	Cover
220	99-8371	1	Nut-Hex
230	98-9711	1	Cord-Solenoid, Stop
240	99-8376	1	Nut-Hex
250	98-7759	1	Pipe-Drain
260	98-9712	1	Band-Cover

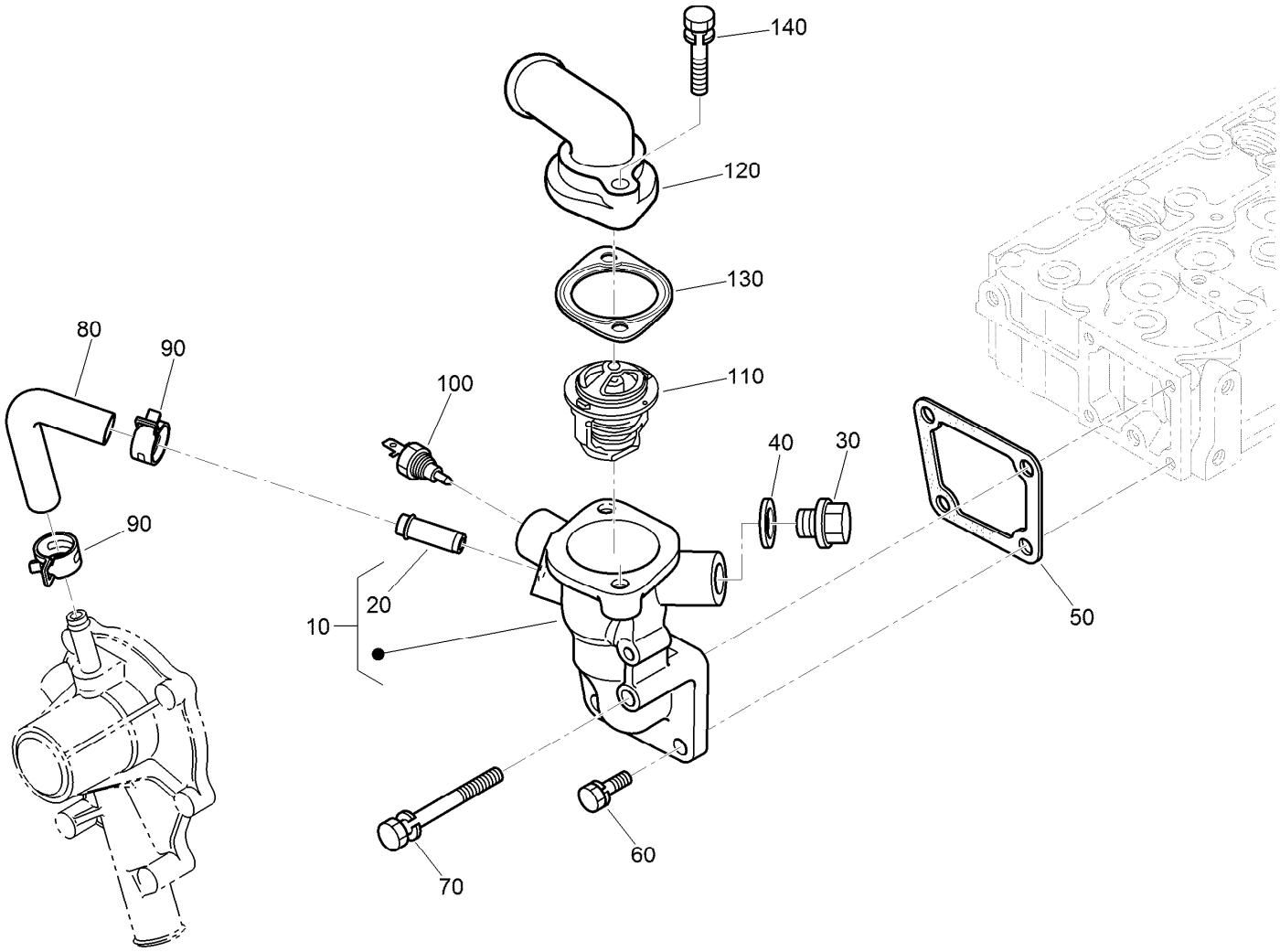

Water Flange and Thermostat Assembly

Ref.	Part Number	Qty.	Description
10	98-9713	1	Water Flange ASM
20	98-9580	1	Pipe-Return, Water
30	105-3747	1	Plug
40	99-3583	1	Gasket
50	98-9638	1	Gasket-Flange, Water
60	98-7692	3	Bolt
70	98-9356	1	Bolt
80	98-9578	1	Pipe-Return, Water
90	125-9078	2	Clamp-Hose
100	98-9719	1	Thermoswitch
110	98-7778	1	Thermostat ASM
120	104-4804	1	Outlet-Water
130	105-3748	1	Gasket-Thermostat
140	98-7777	2	Bolt

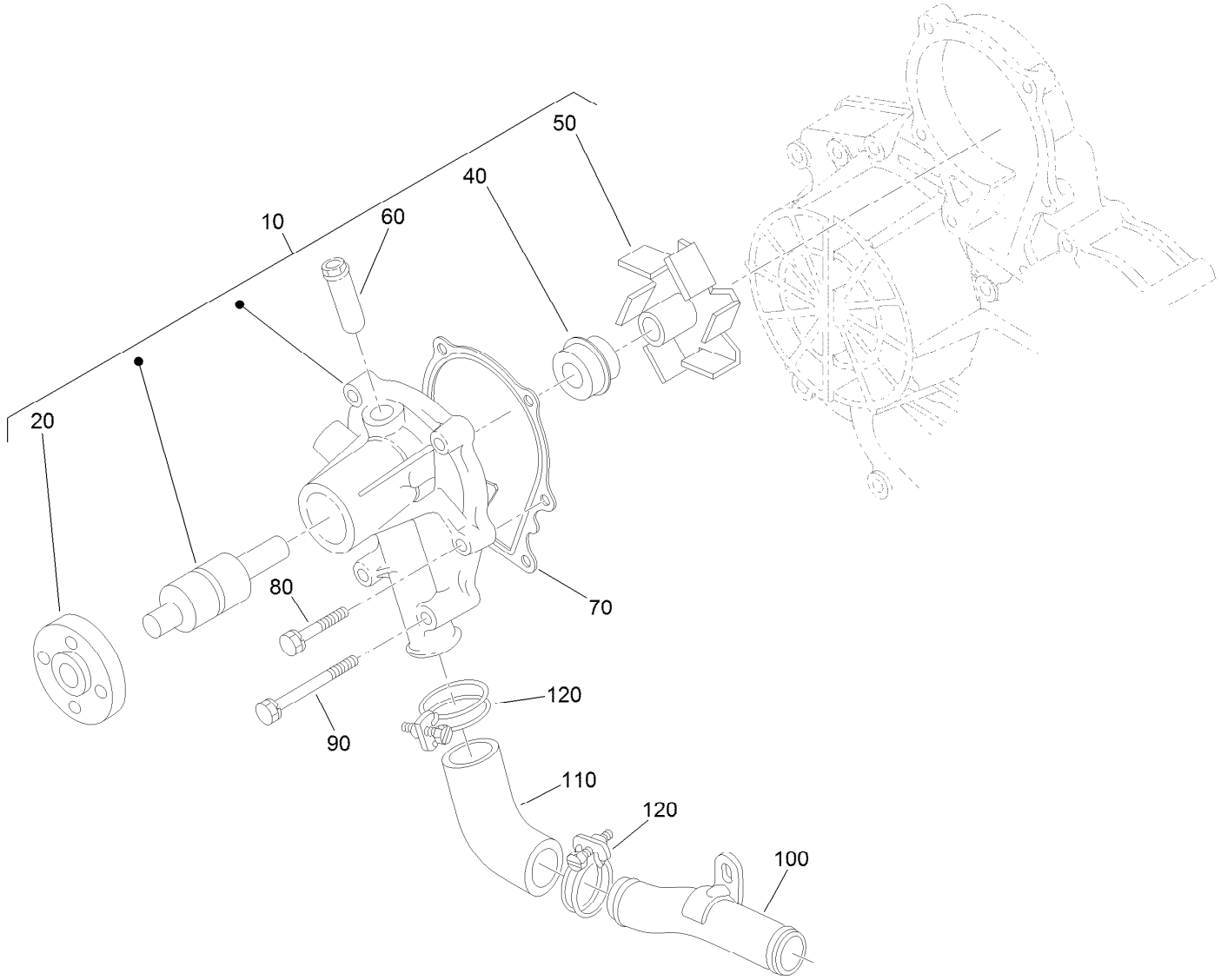

Water Pump Assembly

Ref.	Part Number	Qty.	Description
10	107-9089	1	Water Pump ASM
20	99-3516	1	Flange-Pump, Water
40	105-3750	1	Mechanical Seal ASM
50	112-7017	1	Impeller-Pump, Water
60	100-1932	1	Pipe-Return, Water
70	99-3454	1	Gasket-Pump, Water
80	98-9353	4	Bolt
90	107-9090	2	Bolt
100	98-9716	1	Pipe-Water
110	107-9091	1	Pipe-Water
120	127-0439	2	Clamp-Hose

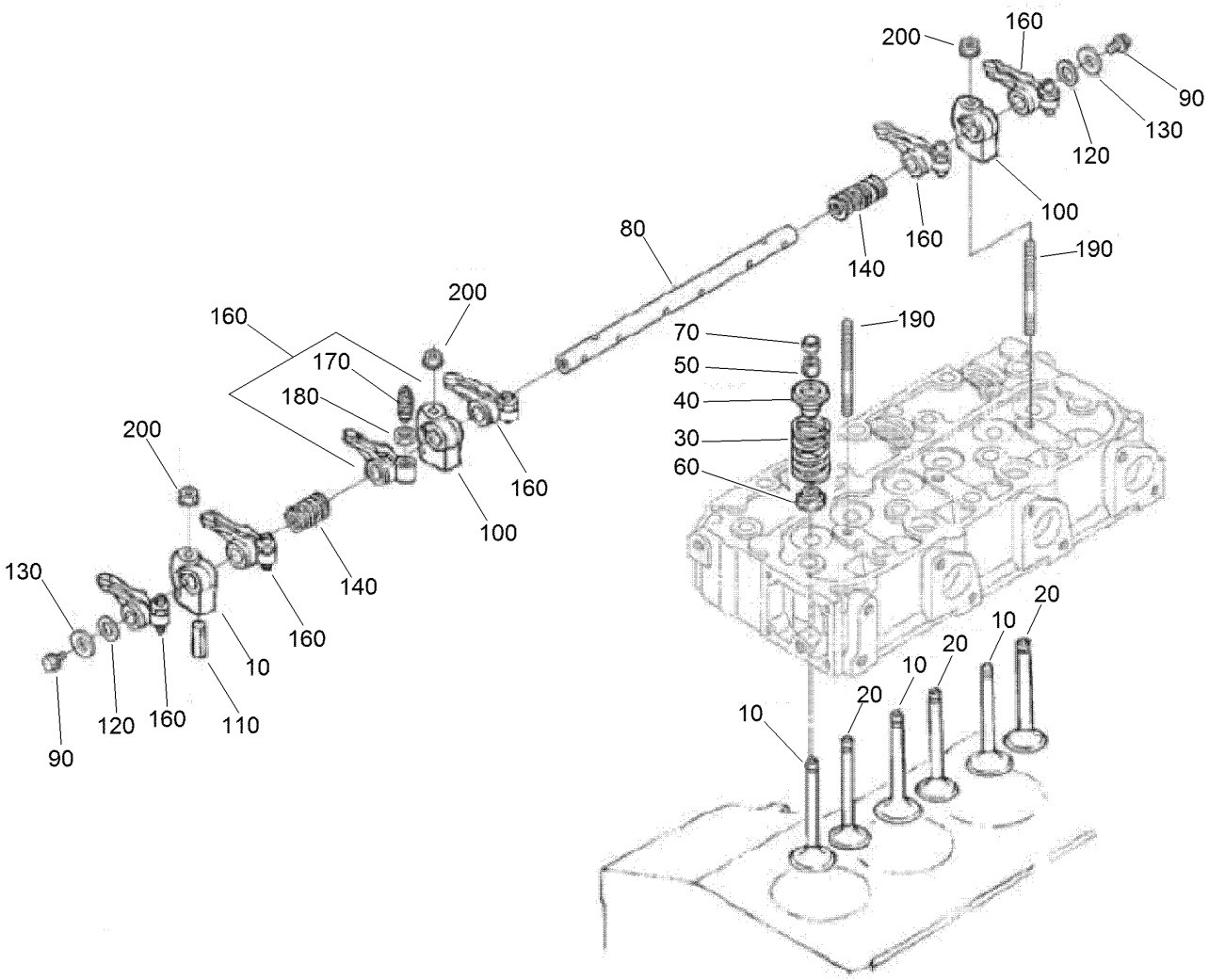

Valve and Rocker Arm Assembly

Ref.	Part Number	Qty.	Description
10	140-2459	3	Valve-Inlet
20	140-2460	3	Valve-Exhaust
30	98-9648	6	Spring-Valve
40	107-9092	6	Retainer-Spring
50	117-7572	6	Collet-Spring, Valve
60	99-8385	6	Seal-Stem, Valve
70	98-9497	6	Cap-Valve
80	130-1248	1	Shaft-Arm, Rocker
90	99-8363	2	Bolt-Flange
100	98-9505	3	Bracket-Arm, Rocker

Ref.	Part Number	Qty.	Description
110	105-3758	1	Pin-Spring
120	98-9507	2	Washer-Shaft, Rocker Arm
130	110-3832	2	Washer-Plain
140	98-9504	2	Spring-Arm, Rocker
160	112-7020	6	Rocker Arm ASM
170	98-9502	6	Screw-Adjusting
180	98-9503	6	Nut
190	98-9506	3	Stud
200	131-6563	3	Nut-Flange

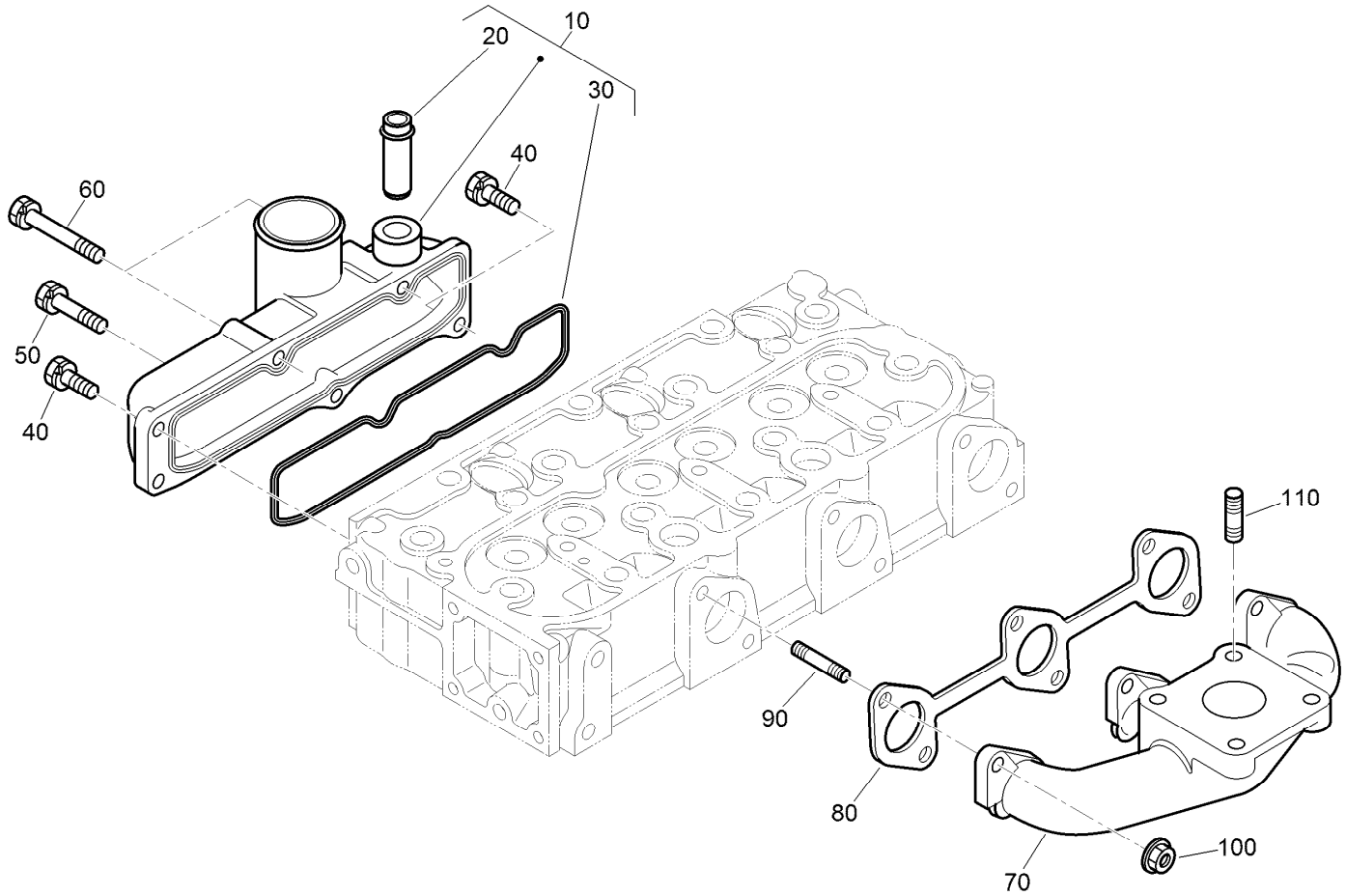

Inlet and Exhaust Manifold Assembly

Ref.	*Part Number*	*Qty.*	*Description*
10	107-7843	1	Manifold Inlet ASM
20	98-9492	1	Joint-Pipe, Breather
30	98-9609	1	Gasket-Manifold, Inlet
40	127-0403	3	Bolt-Flange
50	98-9353	1	Bolt
60	125-9063	2	Bolt-Sems
70	107-9093	1	Manifold-Exhaust
80	99-8327	1	Gasket-Manifold, Exhaust
90	98-9588	6	Stud
100	98-9665	6	Nut
110	98-7769	4	Stud

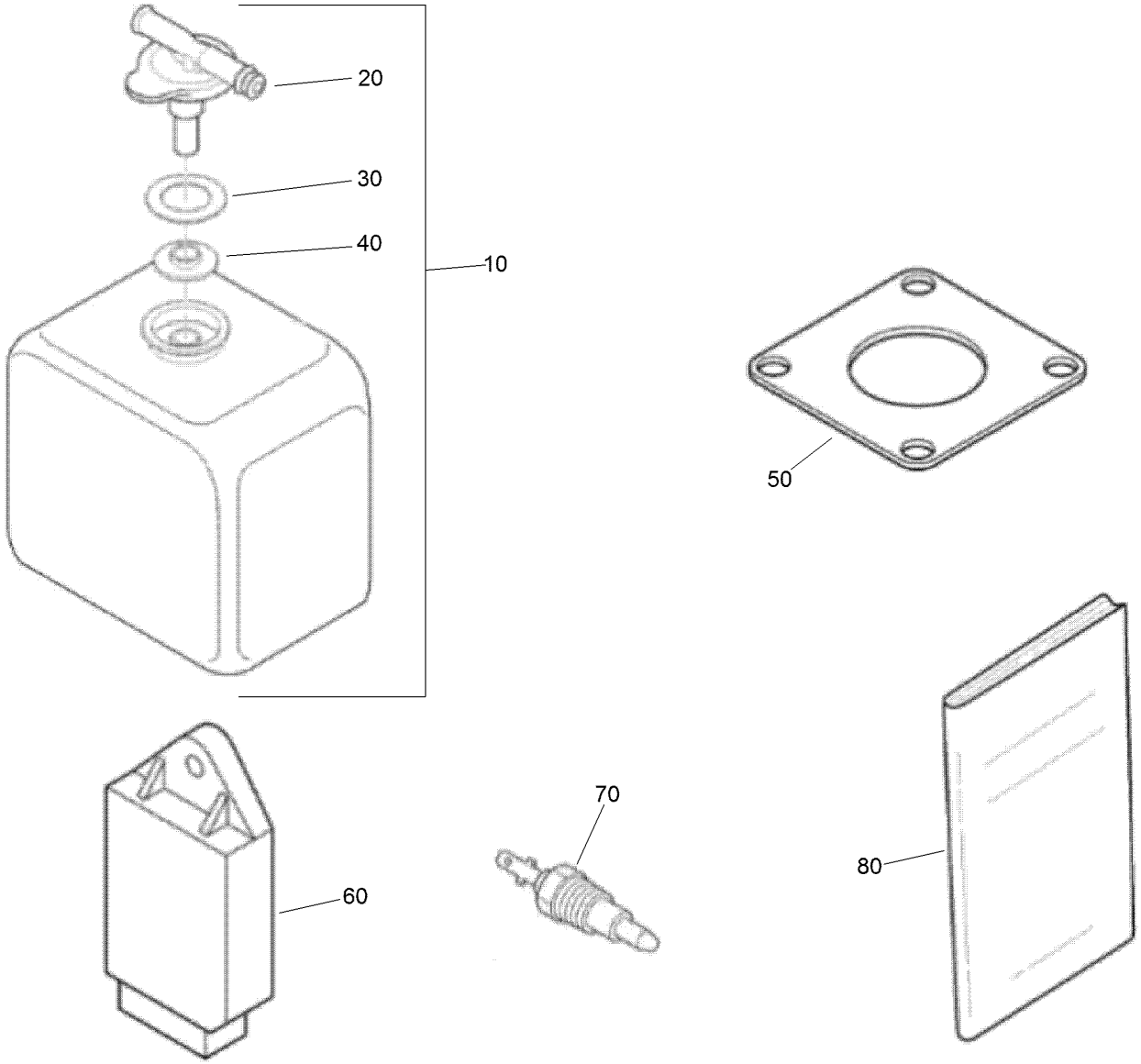

Miscellaneous Engine Parts

Ref.	*Part Number*	*Qty.*	*Description*
10	104-9318	1	Bottle-Overflow
20	115-4132	1	Cap
30	105-3755	1	Gasket
40	105-3756	1	Plate
50	99-8343	1	Gasket-Muffler
60	140-2463	1	Controller-Glow
70	140-2462	1	Thermoswitch
80	140-2461	1	Manual-Operator

Attachments and Accessories

For 03821 Reelmaster 3575 Traction Unit

Product Name	Model/Part
22in Fairway Flex Grass Basket Kit	03415
22in Fairway Compact Grass Basket Kit	03416
8-Blade Radial Reel DPA Cutting Unit with 7in Reel	03638
8-Blade Forward Swept Reel DPA Cutting Unit with 7in Reel	03639
11-Blade Forward Swept Reel DPA Cutting Unit with 7in Reel	03641
7-in, 11 Blade ES (RR) DPA Cutting Unit	03643
Premium All Purpose Grease (Tube)	108-1190
Premium Synthetic Bio-Degradable Hydraulic Fluid (5 Gallon Pail)	119-2157
Premium Synthetic Bio-Degradable Hydraulic Fluid (55 Gallon Drum)	119-2158
Treaded 22-12x12 Tire Asm	121-7924
Step	127-8562-03
PX Hydraulic Fluid (5 Gal)	133-8086
PX Hydraulic Fluid (55 Gal)	133-8087
Cutting Unit Lock Kit, Reelmaster 3555 or 3575 Traction Unit	138-6938
Brush and Handle Kit	29-9100
White Universal Sunshade	30669
Red Universal Sunshade	30671
New Red Paint - Gallon	361-11
Dark Metallic Gray Aerosol Paint	361-12
Semi-Gloss Black Spray Paint	361-9
1000 Hour MVP Kit	44963
Air Dry Red Paint - Qt	5340
Diagnostic Display Box	85-4750

TORO®

Count on it.