Form No. 3450-417 Rev B

TORO®

Count on it.

Parts Catalog

Reelmaster® 3100-D

Traction Unit With Sidewinder®

Model No. 03171—Serial No. 410500000 and Up

Register at www.Toro.com.
Original Instructions (EN)

CE

3450-417 B

Ordering Replacement Parts

To order replacement parts, please supply the part number, the quantity, and the description of each part desired.

Understanding Reference Numbers

Each identified part in an illustration has a reference number. The reference number for a part also appears in the parts list, along with other information about the part.

This catalog uses two special reference number formats, one to indicate parts in a service assembly and another to indicate the quantity of a given part in an illustration.

Service Assembly Reference Numbers

Parts in service assemblies have reference numbers in the form a:b. The a represents the reference number of the entire service assembly and the b represents a sequential number unique to each part within the service assembly.

For example, a wheel assembly might be identified by reference number 6, the tire by 6:1, the valve by 6:2, and the wheel by 6:3. When you order the assembly identified by reference number 6, you receive all parts identified by reference numbers 6:1,6:2, and 6:3. However, you may also order any part individually. Reference numbers of this type appear in illustration and in parts lists.

Reference Numbers Indicating Quantity

In an illustration, if a reference number indicates more than one part, the reference number has the form nX y. The n represents the quantity of the part, the X is the multiplication symbol, and the y represents the reference number.

For example, in an illustration, the reference number 2X 37 means that two of the parts identified by reference number 37 are indicated.

Contents

Frame and Roll-Over Protection System Assembly . . . 5
Battery Tray and Cover Assembly . . . 6
Engine and Air Cleaner Assembly . . . 7
Air Cleaner Assembly No. 93-2190 . . . 8
Muffler, Muffler Guard and Engine Mount Assembly . . . 9
Radiator Assembly . . . 10
Scissor Assembly . . . 11
Rear Lift Arm Assembly . . . 13
Fuel System Assembly . . . 14
Control Panel Assembly . . . 16
Seat Assembly . . . 18
Seat and Track Assembly No. 139-2679 . . . 19
Seat Assembly No. 139-2700 . . . 20
Steering Column Assembly . . . 21
Steering Valve Assembly No. 121-7856 . . . 22
Pedal Assembly . . . 23
Floor Plate Assembly . . . 25
Hood Assembly . . . 26
Hydraulic Drive and Wheel Assembly . . . 27
Hydraulic Motor Assembly No. 110-8785 . . . 28
Hydraulic Motor Assembly No. 110-8786 . . . 29
Brake Assembly No. 104-7705 . . . 30
Rear Fork and Tire Assembly . . . 31
Hydraulic Motor Assembly No. 95-8694 . . . 32
Hydraulic Cylinder Assembly No. 121-3653 . . . 33
Tandem Hydraulic Pump Assembly . . . 34
Hydraulic Pump Assembly No. 104-4890 . . . 36
Gear Pump Assembly No. 95-8601 . . . 38
Tandem Pump Mount Assembly . . . 39
Traction and Steering Circuit Assembly . . . 40
Lift Circuit Assembly . . . 42
Hydraulic Cylinder Assembly No. 112-9916 . . . 43
Hydraulic Cylinder Assembly No. 117-5109 . . . 44
Hydraulic Mow Circuit Assembly . . . 45
Gear Motor Assembly No. 115-8250 . . . 47
Wire Harness and Battery Assembly . . . 48
Hydraulic Tank and Valve Assembly . . . 49
Hydraulic Manifold Assembly No. 108-9037 . . . 51
Valve Assembly No. 95-8581 . . . 52
Crankcase Assembly . . . 53
Oil Pan and Dipstick Assembly . . . 54
Cylinder Head Assembly . . . 55
Gear Case and Oil Filter Cartridge Assembly . . . 56
Cylinder Head Cover Assembly . . . 57
Main Bearing Case Assembly . . . 58
Camshaft and Idle Gear Shaft Assembly . . . 59
Piston and Crankshaft Assembly . . . 60
Fuel Camshaft and Governor Shaft Assembly . . . 61
Idle Apparatus Assembly . . . 62
Stop Solenoid and Fuel Pump Cover Assembly . . . 63
Injection Pump Assembly . . . 64
Governor Assembly . . . 65
Speed Control Plate Assembly . . . 66
Nozzle Holder and Glow Plug Assembly . . . 67

© 2023—The Toro® Company

8111 Lyndale Avenue South
Bloomington, MN 55420

Contact us at www.Toro.com.
Printed in the USA.

All Rights Reserved

Contents (continued)

Nozzle Holder Assembly 68
Alternator, Pulley and Fan Assembly 69
Alternator Components Assembly 70
Starter and Flywheel Assembly 71
Starter Component Assembly 72
Water Flange and Thermostat Assembly 73
Water Pump and Water Pipe Assembly 74
Valve and Rocker Arm Assembly 75
Inlet and Exhaust Manifold Assembly 76
Miscellaneous Engine Parts 77
Upper Gasket Kit 78
Lower Engine Gasket Kit 79
Attachments and Accessories 80

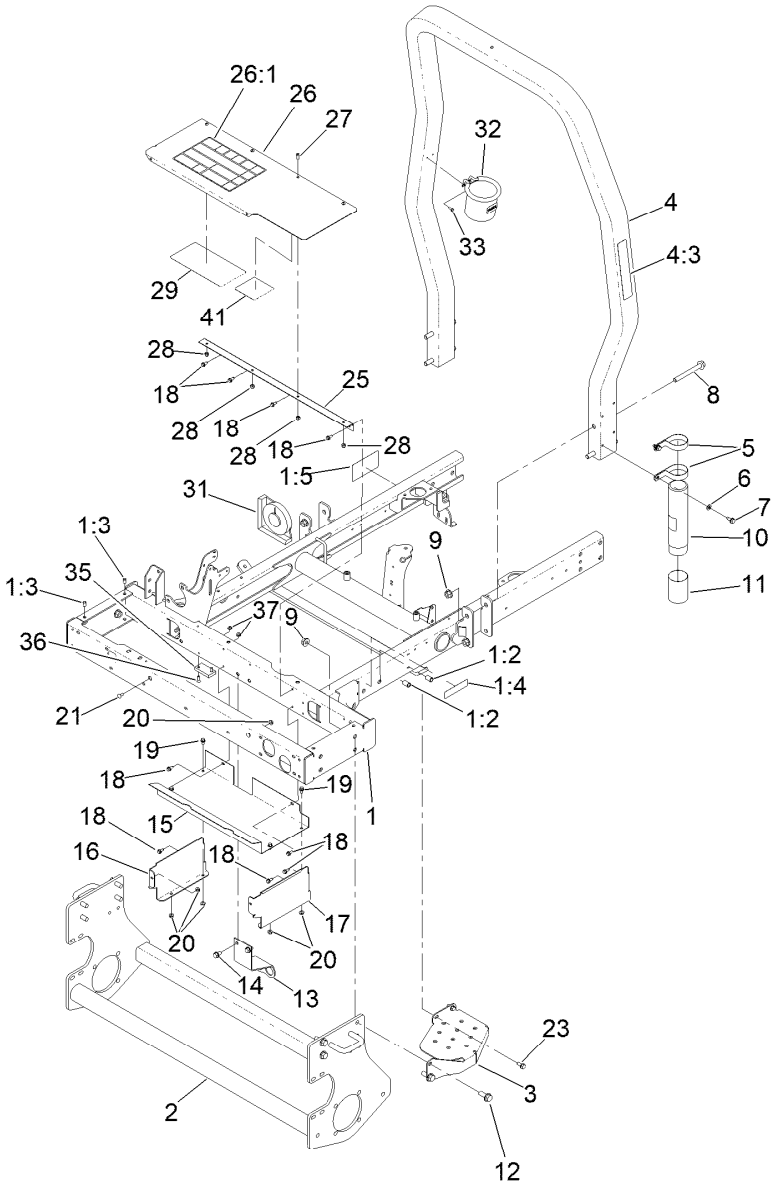

Frame and Roll-Over Protection System Assembly

Ref.	Part Number	Qty.	Description
1	121-3639	1	Frame ASM W/Decals
1:2	32148-8	2	Nut-Clinch
1:3	32148-6	2	Nut-Clinch
1:4	133-8062	1	Decal-Arrestor, Spark
1:5	117-3270	2	Decal-Danger
2	95-8568-03	1	Frame-Lower
3	99-3375-03	1	Step
4	127-8493	1	ROPS ASM
4:3	136-3702	1	Decal-Safety, ROPS
5	2412-133	2	Clamp-R
6	3256-23	2	Washer-Plain
7	32144-70	2	Screw-HWHTF
8	117-3176	4	Screw-HHF
9	32128-49	12	Nut-HHF
10	104-7050	1	Tube-Manual
11	104-7048	1	Cap-Housing
12	3234-38	8	Screw-HHF
13	115-3417-0P	1	Bracket-Bulkhead, Scissor
14	32144-15	2	Screw-HHFTF
15	99-3430-0P	1	Bottom - Toolbox *b

Ref.	Part Number	Qty.	Description
16	99-3431-0P	1	End - Toolbox, RH *b
17	99-3432-0P	1	End - Toolbox, LH *b
18	32144-10	9	Screw-HWH
19	3234-13	4	Screw-HHF
20	32128-33	6	Nut-HF
21	3229-11	2	Screw-CARR
23	3234-5	2	Screw-HHF
25	119-2034	1	Hinge-Toolbox
26	119-2029	1	Toolbox Cover ASM
26:1	121-3623	1	Decal-Danger
27	119-6906	4	Screw-HSBH
28	3296-42	4	Nut-Lock, NI
29	136-3716	1	Decal-Service
31	99-3503	1	Indicator-Angle
32	117-2378	1	Holder-Bag
33	32144-1	2	Screw-Taptite
35	95-8684	1	Pad-Bumper
36	3289-4	2	Screw-FH
37	104-7201	2	Nut-HF, NI
41	136-3717	1	Decal-Reel Speed

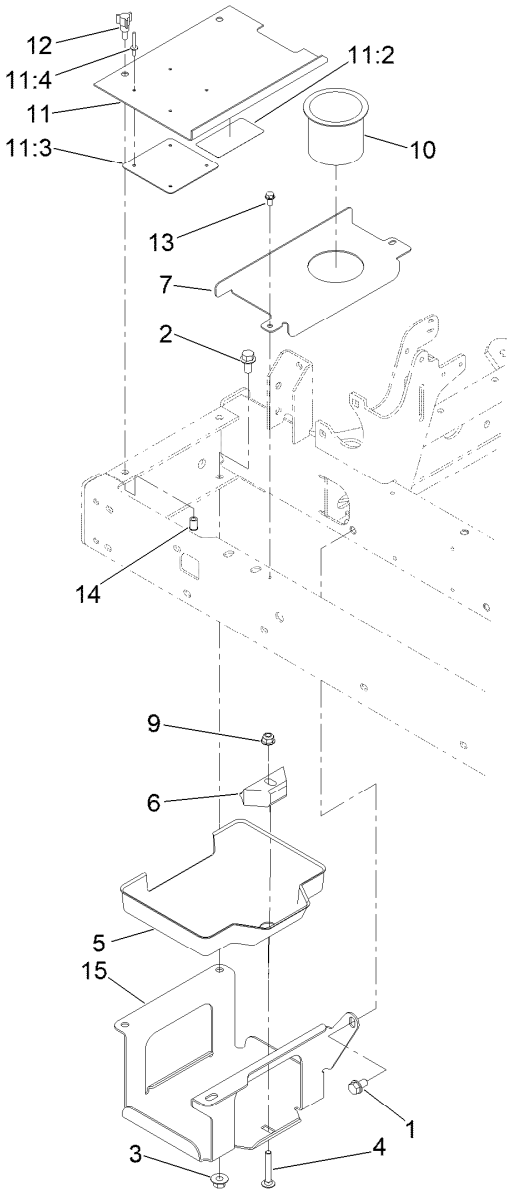

Battery Tray and Cover Assembly

Ref.	Part Number	Qty.	Description
1	32144-15	1	Screw-HHFTF
2	3234-1	3	Screw-HHF
3	32128-43	3	Nut-Flange
4	3230-6	1	Bolt-CARR
5	99-3513	1	Tray-Battery
6	138-6335	1	Retainer-Battery
7	95-8817-01	1	Cover-Battery, Inner
9	104-8300	1	Nut-HF, NI
10	94-1410	1	Holder-Can, Beverage

Ref.	Part Number	Qty.	Description
11	99-3602	1	Battery Cover ASM
11:2	93-7276	1	Decal-Danger
11:3	87-7620	1	Shield-Terminal, Battery
11:4	3269-27	4	Rivet-Snap
12	233-70	2	Knob-Star, Three
13	32144-4	2	Screw-HWH
14	32148-6	2	Nut-Clinch
15	95-8796-03	1	Support-Battery

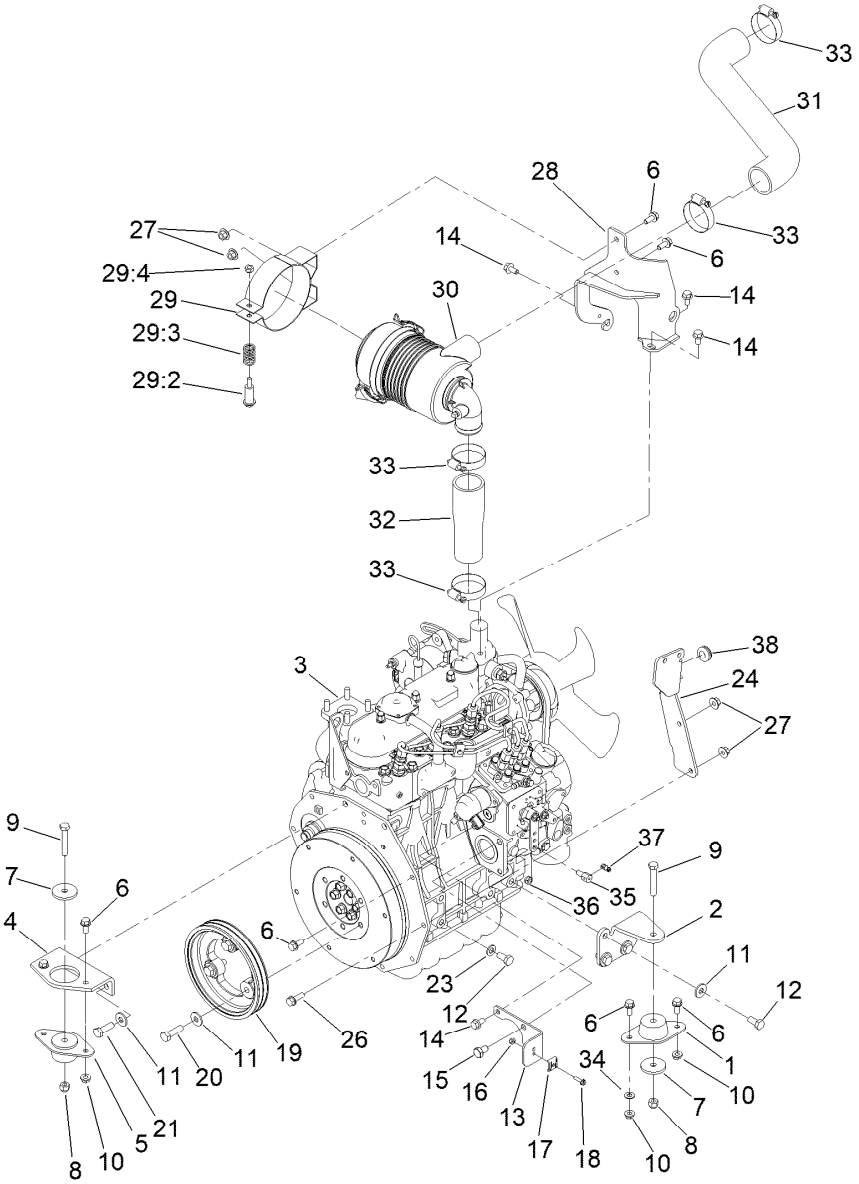

Engine and Air Cleaner Assembly

Ref.	Part Number	Qty.	Description
1	121-9076	1	Mount-Engine
2	95-8937-0P	1	Mount-Engine, LH
3	138-6905	1	Engine-Kubota, D1105
4	95-8926-0P	1	Mount - Engine, Front
5	93-5265	1	Mount-Engine
6	3234-5	5	Screw-HHF
7	80-8560	2	Washer-Hardened
8	3296-39	2	Nut-Lock, NI
9	323-11	2	Screw-HH
10	32128-20	4	Nut-HF
11	80-6990	7	Washer-Hardened
12	63-7790	4	Screw-Cap
13	110-9009-0P	1	Bracket-Cable, Throttle
14	33104-016	4	Screw-HHF
15	70-8470	1	Screw-HH
16	3296-2	1	Nut-Lock, NI
17	81-1690	1	Clamp-Cable
18	32105-13	1	Screw-HWH
19	99-3412	1	Pulley
20	56-2140	3	Screw-HH

Ref.	Part Number	Qty.	Description
21	95-8812	1	Screw-HH
23	33095-00	1	Washer-Flat
24	115-3487-0P	1	Bracket-Mount, Fuel Filter
26	3234-17	3	Screw-HHF
27	32128-44	4	Nut
28	136-3154-0P	1	Bracket-Cleaner, Air
29	93-2191	1	Air Cleaner Mounting Band ASM
29:2	94-3653	1	Bolt
29:3	94-3654	1	Spring
29:4	48-9510	1	*obs* Nut
30	93-2190	1	Air Cleaner ASM
31	95-8946	1	Hose-Upper, Air Inlet
32	95-8947	1	Hose-Air Inlet, Lower
33	2412-92	4	Clamp-Hose
34	120-9683	1	Washer-Plain
35	98-9311	1	Swivel-Throttle
36	3296-20	1	Nut-Lock, NI
37	112-9919	1	Stop-Cable, Throttle
38	1-543296	1	Grommet

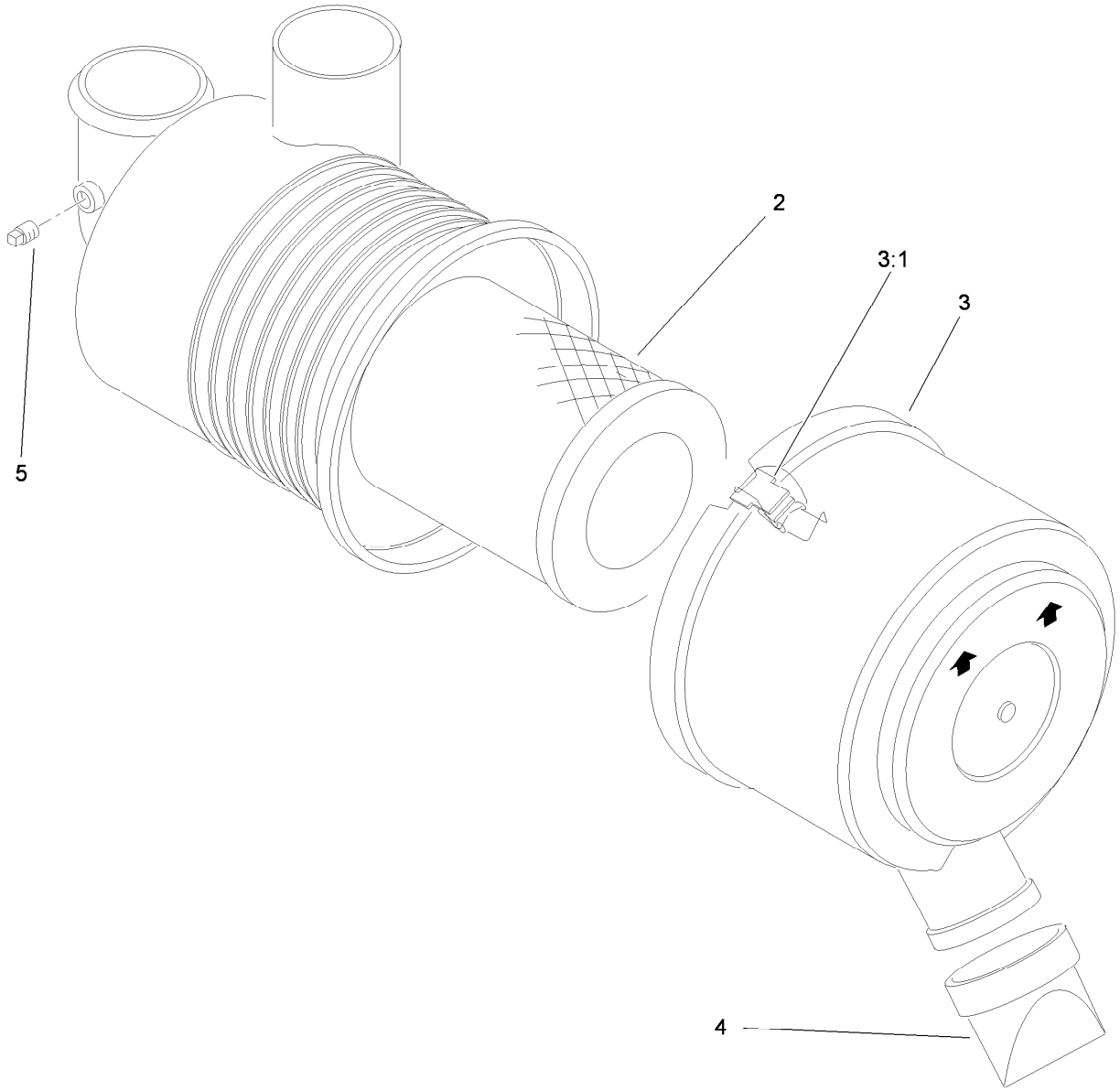

Air Cleaner Assembly No. 93-2190

Ref.	*Part Number*	*Qty.*	*Description*
2	108-3811	1	Filter-Air
3	94-3652	1	Cover ASM
3:1	1-643283	2	Latch-Cleaner, Air
4	87-9400	1	Valve-Vacuator
5	285-17	1	Plug-Pipe

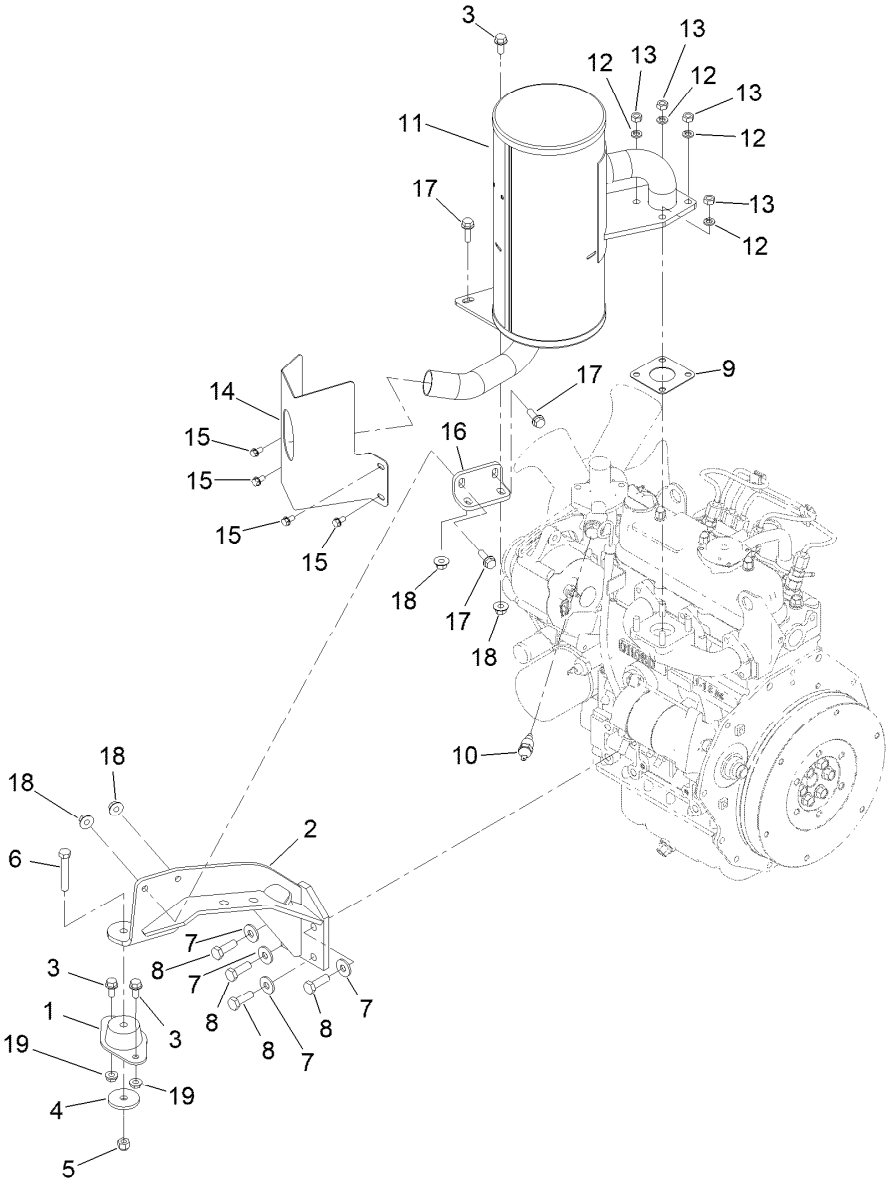

Muffler, Muffler Guard and Engine Mount Assembly

Ref.	Part Number	Qty.	Description
1	121-9076	1	Mount-Engine
2	100-4838-0P	1	Mount-Engine
3	3234-5	3	Screw-HHF
4	80-8560	1	Washer-Hardened
5	3296-39	1	Nut-Lock, NI
6	323-11	1	Screw-HH
7	80-6990	4	Washer-Hardened
8	95-8812	4	Screw-HH
9	98-9611	1	Gasket
10	106-7772	1	Thermoswitch

Ref.	Part Number	Qty.	Description
11	104-4834	1	Muffler
12	3253-4	4	Washer-Lock
13	33014-00	4	Nut-Hex
14	99-3425-03	1	Guard-Exhaust
15	32144-4	4	Screw-HWH
16	95-8943-0P	1	Bracket-Muffler
17	3234-17	3	Screw-HHF
18	32128-44	4	Nut
19	32128-20	2	Nut-HF

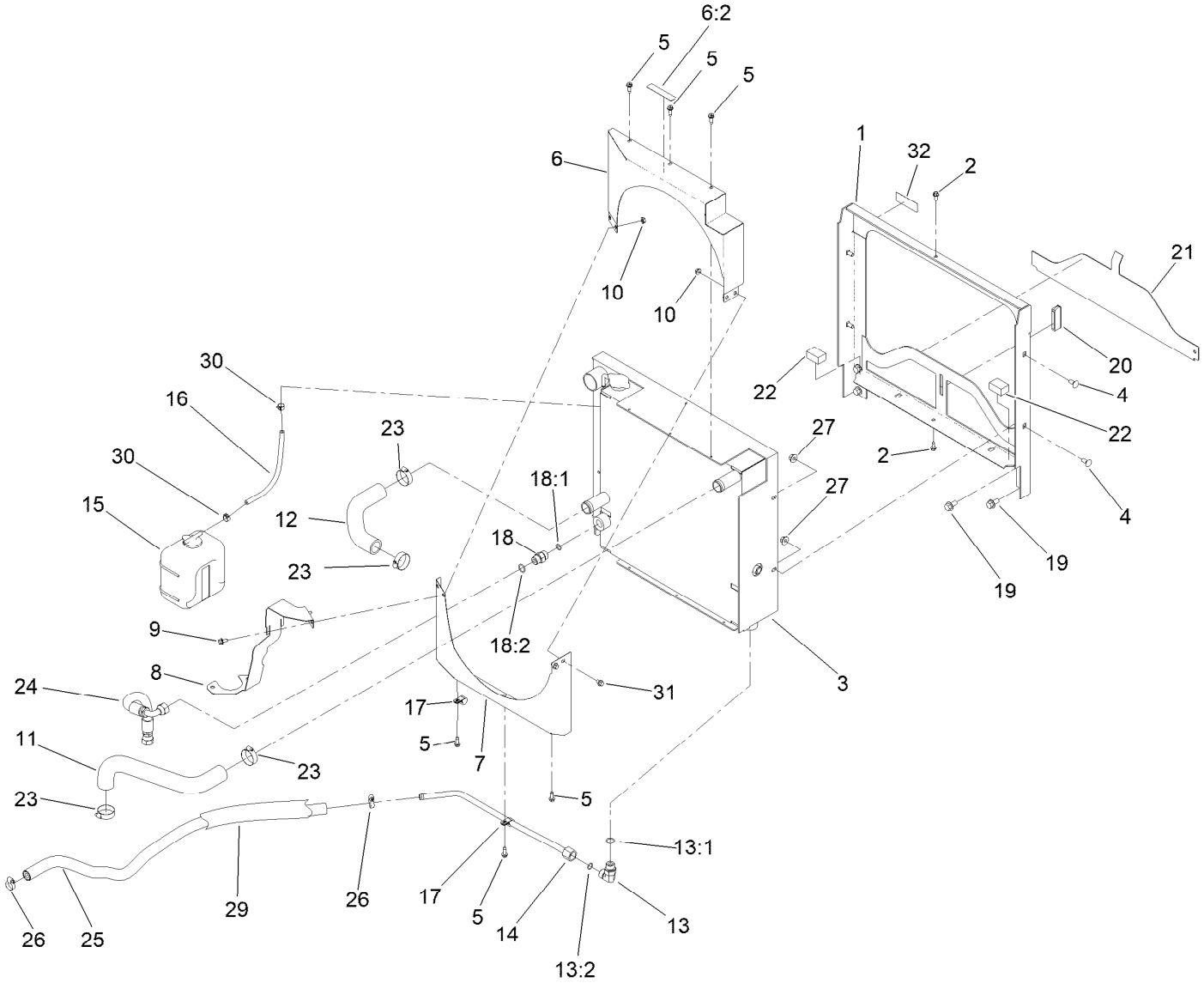

Radiator Assembly

Ref.	Part Number	Qty.	Description
1	100-4903-0P	1	Radiator Frame ASM
2	119-2038	2	Screw-HWH
3	120-3392	1	Radiator/Oil Cooler
4	3230-1	4	Bolt-CARR
5	32104-95	6	Screw-HWH
6	121-3584	1	Shroud-Fan, Top
6:2	93-6681	1	Decal-Warning, Fan
7	121-6254-0P	1	Shroud-Fan, Bottom
8	121-3604-0P	1	Bracket-Mounting, Reservoir
9	3234-13	2	Screw-HHF
10	32128-33	4	Nut-HF
11	121-3571	1	Hose-Radiator,Upper
12	119-6748	1	Hose-Radiator, Lower
13	340-98	1	Fitting-Elbow, 90 DEG
13:1	237-79	1	O-Ring
13:2	237-30	1	O-Ring
14	121-3572	1	Tube-HYD
15	108-0638	1	Bottle-Overflow

Ref.	Part Number	Qty.	Description
16	110-4105	1	Hose-Fuel
17	2412-73	2	Clamp-R
18	340-4	1	Fitting-Straight
18:1	237-30	1	O-Ring
18:2	237-79	1	O-Ring
19	3234-1	4	Screw-HHF
20	99-3497	1	Magnet
21	95-8702-0P	1	Shield-Radiator, Lower
22	95-8962	2	Seal-Foam, Radiator
23	2412-34	4	Clamp-Hose
24	104-2806	1	Hose-HYD
25	93-6804	1	Hose
26	2412-36	2	Clamp-Hose
27	32128-44	4	Nut
29	56-7985	1	Sleeve-Protective
30	92-2379	2	Clamp-Hose
31	3234-26	2	Screw-HHF
32	125-6688	1	Decal-Danger, Starter Fluid

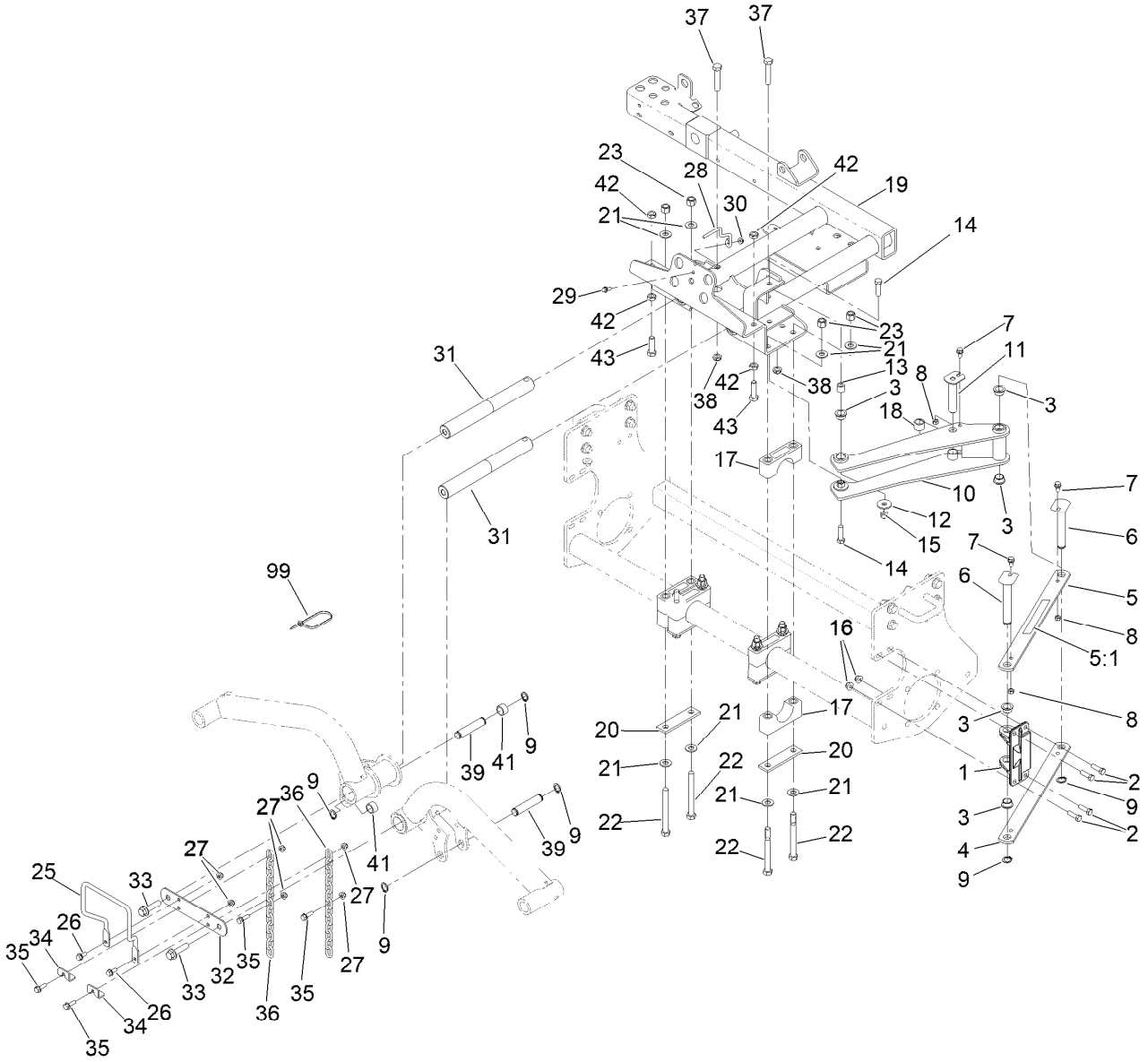

Scissor Assembly

Ref.	Part Number	Qty.	Description
1	95-8883	1	Mount-Scissor
2	323-7	4	Screw-HH
3	95-8526	6	Bushing-Plastic
4	95-8527-0P	1	Link-Scissor
5	99-3505	1	Scissors Link ASM
5:1	94-3353	1	Decal-Pinch Point, Intl
6	125-1914	2	Pin-Pivot
7	3234-14	3	Screw-HHF
8	32152-1	3	Nut-Lock, Cone
9	32120-93	6	Ring-Retaining
10	95-8521-03	1	Frame-Scissor
11	140-5248	1	Pin-Ram, Pivot
12	87-5330	2	Washer
13	95-8603	2	Spacer
14	324-6	2	Screw-HH
15	3296-48	2	Nut-Hex
16	104-8301	4	Nut-HF, NI
17	104-4865	8	Cap-Bearing
18	46-6350	2	Spacer
19	100-4930-03	1	Carrier ASM
20	99-3373	4	Bar-Support, Slide

Ref.	Part Number	Qty.	Description
21	87-7270	16	Washer-Thrust
22	325-19	8	Screw-HH
23	3296-23	8	Nut-Lock, NI
25	99-3492	1	Rod-Formed, Hose Guard
26	3234-5	2	Screw-HHF
27	104-8300	6	Nut-HF, NI
28	99-3433	1	Wire-Center
29	3234-4	1	Screw-HHF
30	32128-33	1	Nut-HF
31	95-8531	2	Shaft-Pivot, Liftarm
32	95-8532-03	1	Link-Shaft, Pivot
33	3234-27	2	Screw-HHF
34	99-3550	2	Clip-Link
35	3234-17	4	Screw-HHF
36	98-7981	2	Chain-Link, Straight
37	325-10	2	Screw-HH
38	3296-45	2	Nut-Hex
39	95-8575	2	Pin-Clevis
41	75-9590	2	Spacer-Cylinder
42	3218-5	4	Nut-Jam

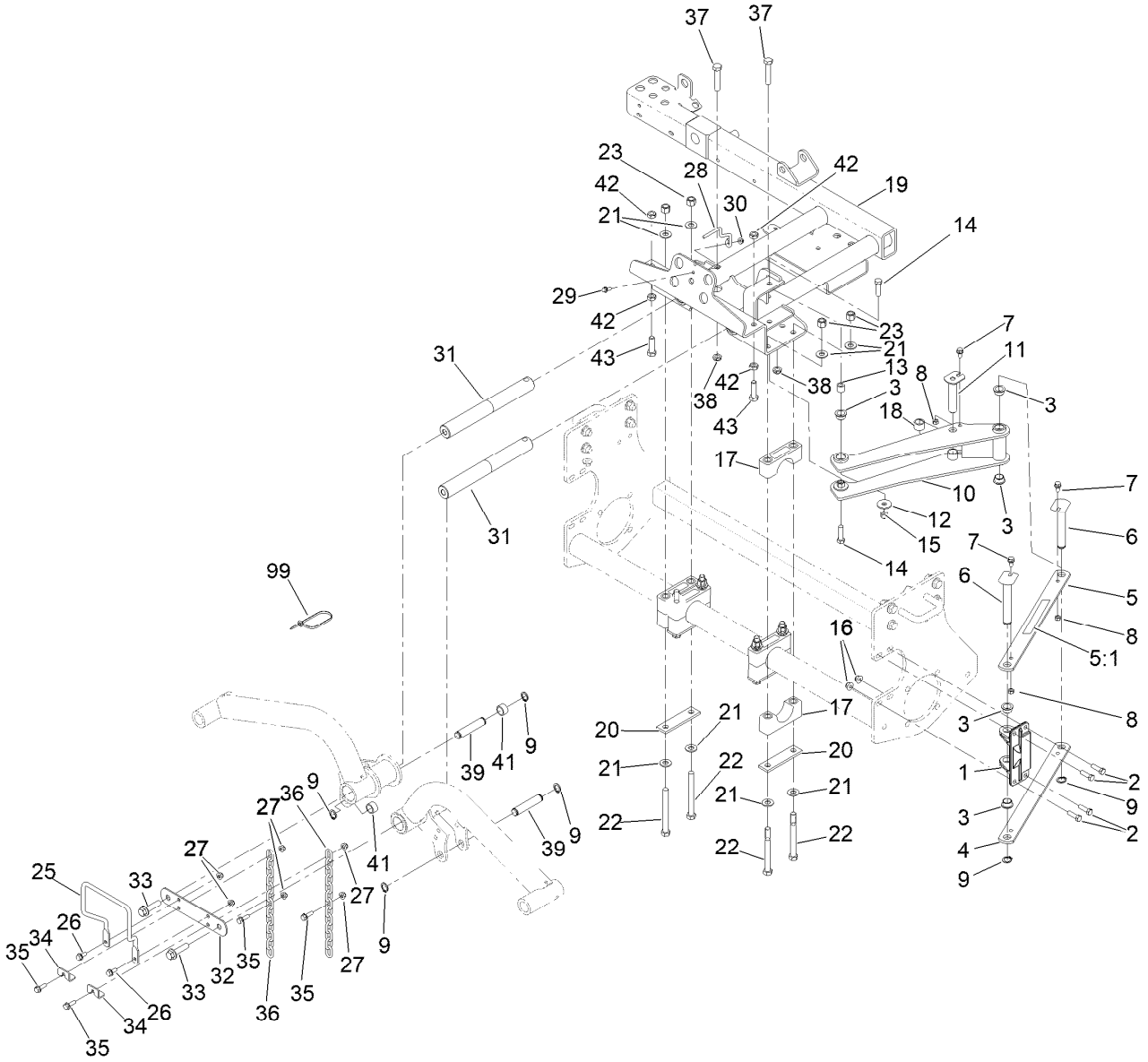

Scissor Assembly (continued)

Ref.	*Part Number*	*Qty.*	*Description*
43	325-7	2	Screw-HH
99	3290-378	1	Tie-Cable

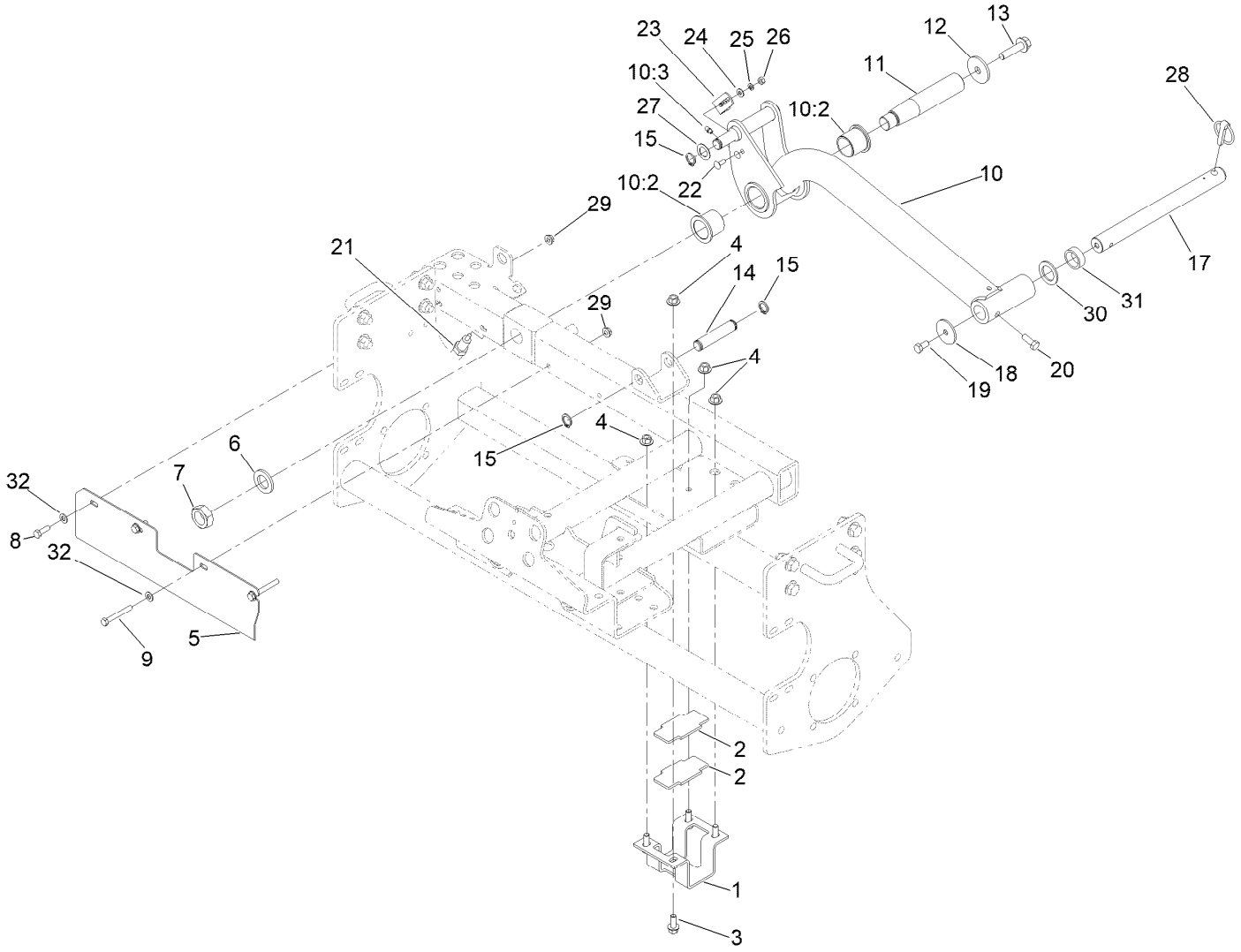

Rear Lift Arm Assembly

Ref.	Part Number	Qty.	Description
1	95-8519-0P	1	Bracket - Slide *b
2	95-8538	2	Slide-Plastic
3	3234-11	4	Screw-HHF
4	32128-43	4	Nut-Flange
5	121-3616-03	1	Guard
6	86-1480	1	Washer
7	3220-9	1	Nut-Jam
8	322-5	2	Screw-HH
9	322-12	2	Screw-HH
10	136-3425	1	Rear Liftarm ASM-Rm310X
10:2	69-6470	2	Bushing-Caster
10:3	302-5	1	Fitting-Grease
11	95-8990	1	Shaft-Pivot, Rear
12	75-7730	1	Washer-Thrust
13	3234-27	1	Screw-HHF
14	95-8575	1	Pin-Clevis
15	32120-93	3	Ring-Retaining

Ref.	Part Number	Qty.	Description
17	104-1392	1	Shaft-Pivot
18	63-7400	1	Washer-Rebound
19	323-4	1	Screw-HH
20	323-6	1	Screw-HH
21	93-6762	1	Switch-Ball
22	3229-1	2	Screw-CARR
23	95-8613	1	Bracket-Switch
24	3256-22	2	Washer-Flat
25	3253-3	2	Washer-Lock
26	3217-5	2	Nut-Hex
27	3-6498	1	Washer-Thrust
28	283-71	1	Pin-Lynch
29	32128-20	4	Nut-HF
30	3-6781	1	Washer-Flat
31	63-0070	1	Spacer
32	3256-23	4	Washer-Plain

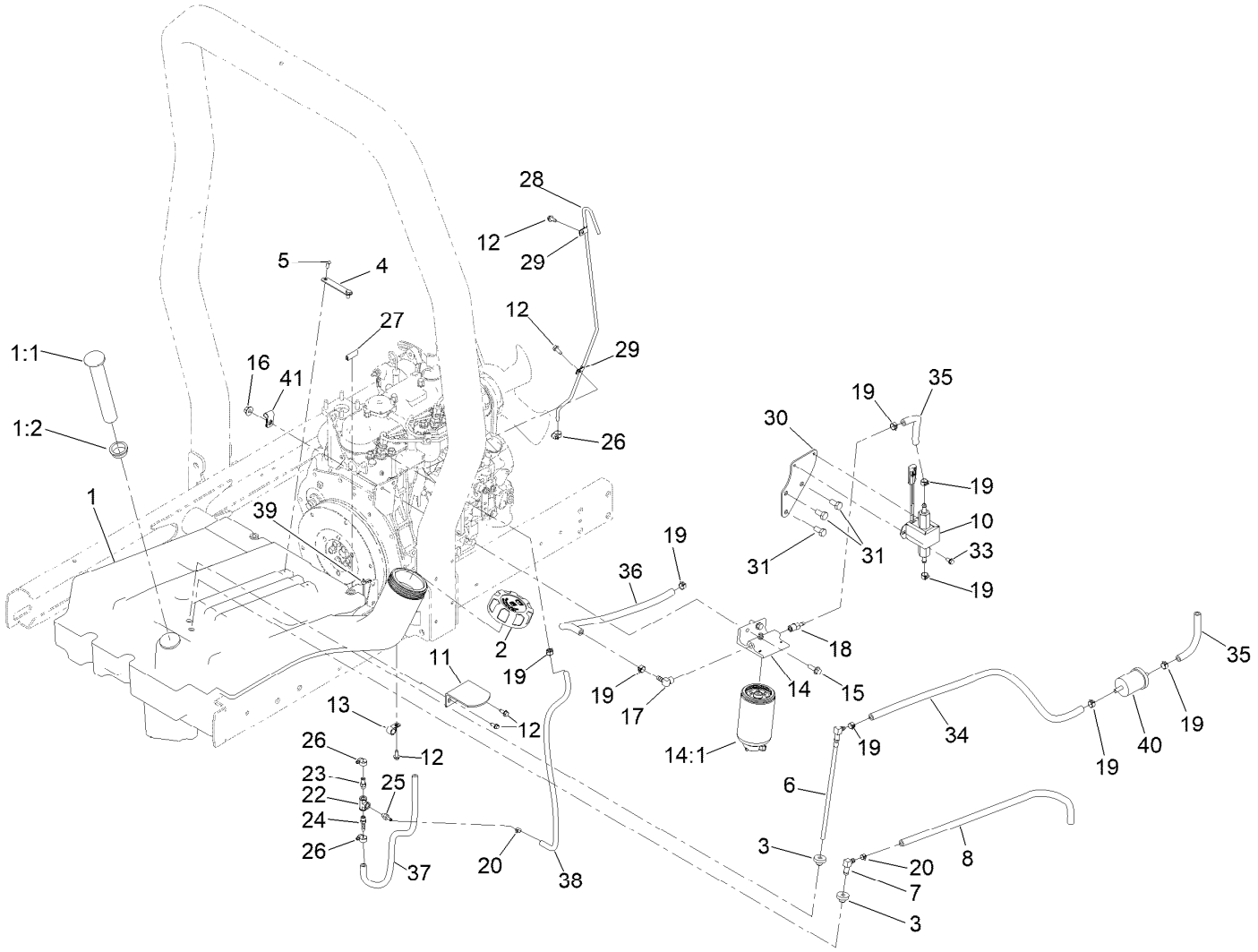

Fuel System Assembly

Ref.	Part Number	Qty.	Description
1	95-8620	1	Tank-Fuel
1:1	95-8971	1	Gauge-Fuel
1:2	95-8972	1	Grommet
2	114-5064	1	Cap-Diesel
3	46-6560	2	Bushing
4	95-8881	1	Strap-Line, Fuel
5	321-2	2	Screw-HH
6	110-9689	1	Pipe-Stand
7	46-6550	1	Fitting-Elbow, 90 DEG
8	110-6187	1	Hose-Fuel
10	145-3160	1	Pump-Fuel, Electric
11	95-8968-03	1	Support-Tank, Fuel
12	32144-10	5	Screw-HWH
13	2412-73	1	Clamp-R
14	110-9044	1	Separator-Filter
14:1	110-9049	1	Filter-Spin On, Fuel/Water
15	3234-17	2	Screw-HHF
16	32128-44	2	Nut

Ref.	Part Number	Qty.	Description
17	353-781	1	Fitting-HYD, 90
18	353-783	1	Fitting-STR
19	92-2379	9	Clamp-Hose
20	2412-80	2	Clamp-Hose
22	354-20	1	Fitting-Tee
23	354-21	1	Fitting-Barbed
24	304-73	1	Fitting-Straight
25	354-22	1	Fitting-Barbed
26	2412-108	3	Clamp-Worm
27	110-8754	1	Trim
28	95-8615	1	Tube-Breather
29	2412-72	2	Clip-Closed, Insulated
30	136-3818-0P	1	Plate-Fuel Pump
31	63-7790	3	Screw-Cap
33	32144-4	2	Screw-HWH
34	110-3257	1	Hose-Fuel
35	109-0310	2	Hose-Fuel
36	121-7852	1	Hose-Fuel

● Not illustrated

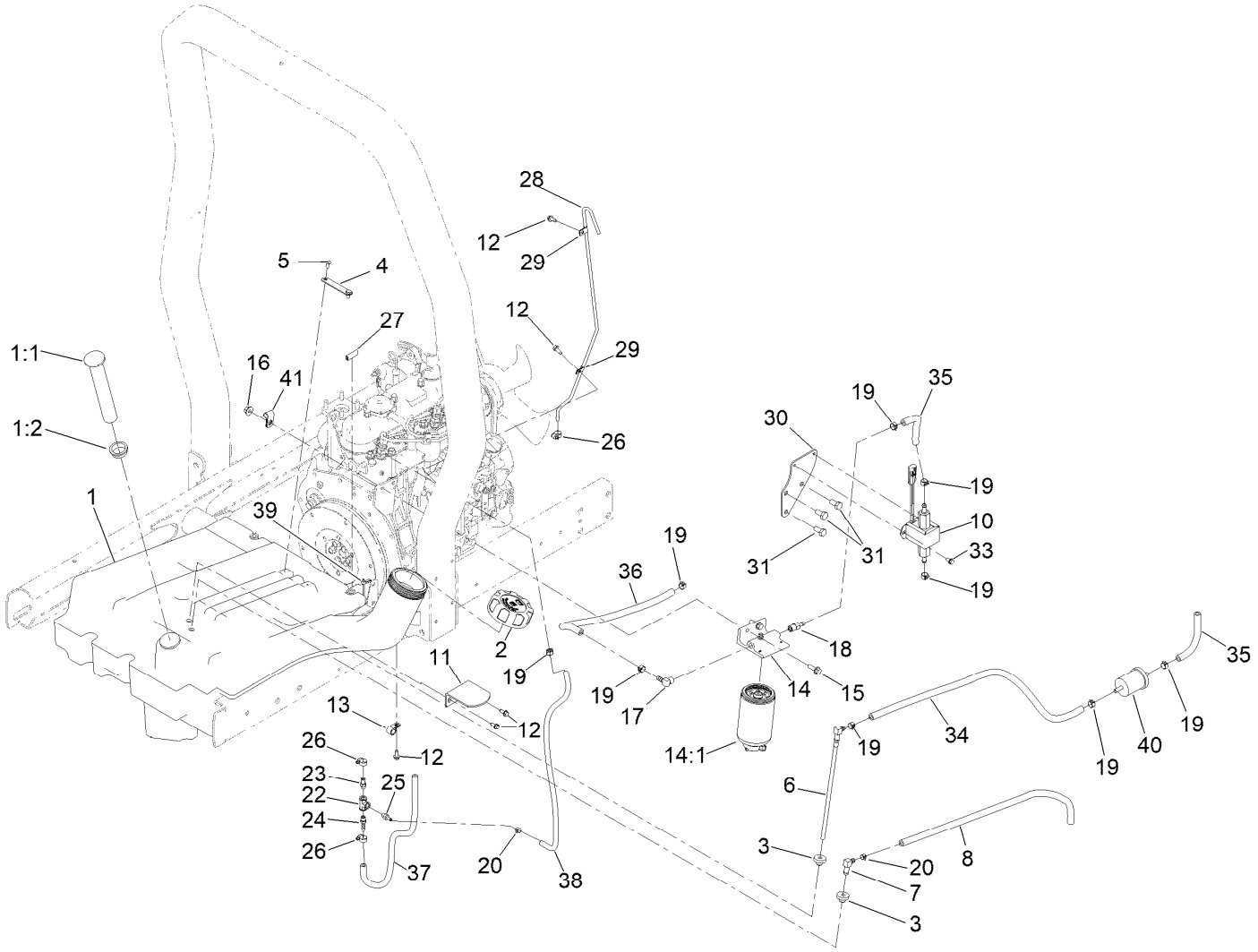

Fuel System Assembly (continued)

Ref.	Part Number	Qty.	Description
37	110-5701	1	Hose-Fuel
38	110-8751	1	Hose-Fuel
39	3290-379	1	Tie-Cable ●

Ref.	Part Number	Qty.	Description
40	98-7612	1	Filter-Fuel
41	2412-10	1	Clamp-R
99	3290-378	1	Tie-Cable ●

● Not illustrated

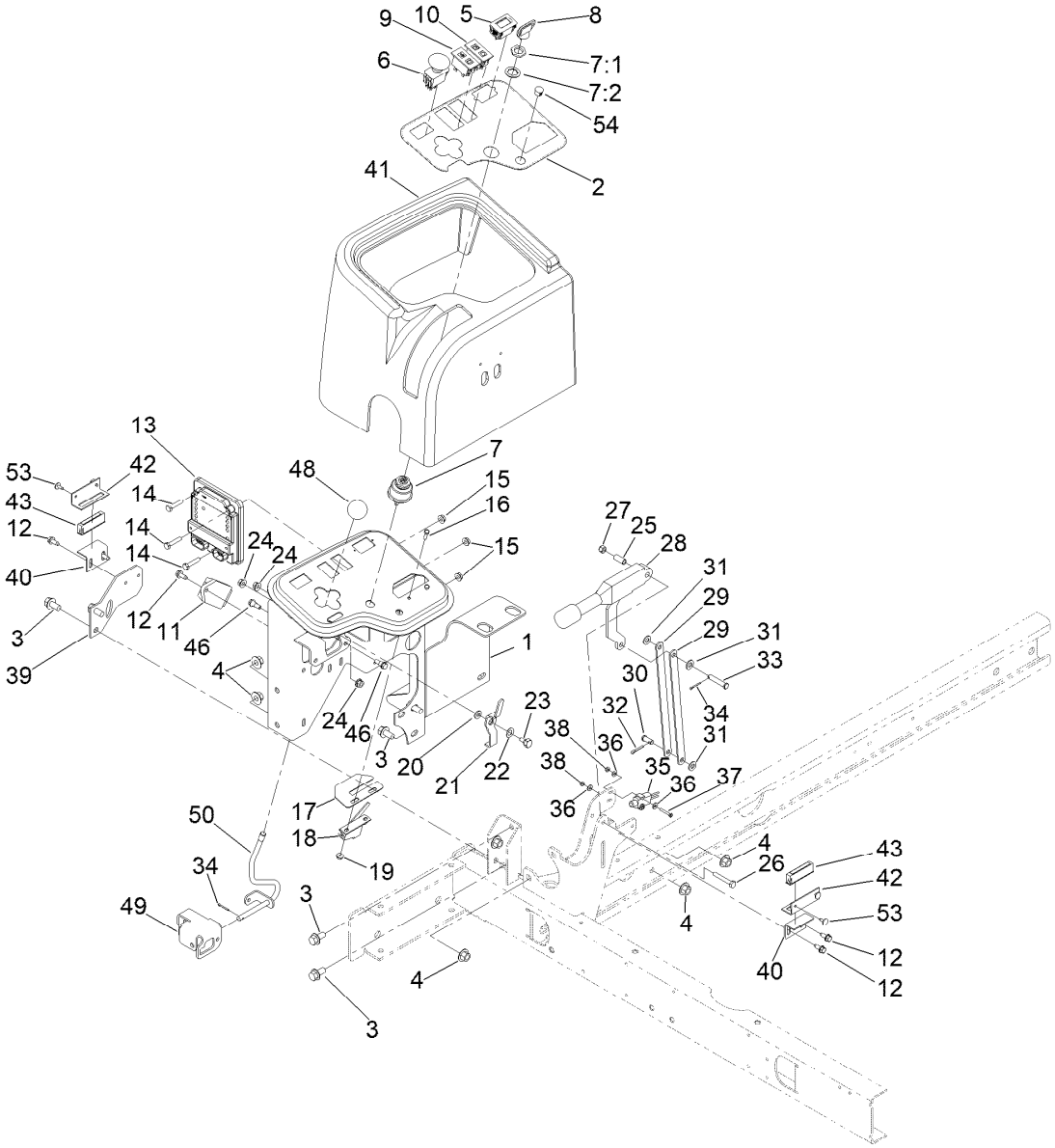

Control Panel Assembly

Ref.	Part Number	Qty.	Description
1	136-3681-03	1	Panel-Control
2	136-3679	1	Decal-Console
3	3234-1	6	Screw-HHF
4	32128-43	6	Nut-Flange
5	120-2244	1	Hourmeter
6	93-9999	1	Switch-PTO
7	104-2541	1	Ignition Switch ASM
7:1	218-461	1	Nut-HH
7:2	3254-5	1	Washer-Lock
8	63-8360	1	Key-Ignition
9	100-8070	1	Lamp-Warning
10	100-8071	1	Lamp-Warning
11	98-7611	1	Controller-Glow
12	32144-10	5	Screw-HWH
13	106-9277	1	Module-Control, Standard
14	321-8	3	Screw-HH
15	32128-33	3	Nut-HF
16	3290-134	2	Screw

Ref.	Part Number	Qty.	Description
17	104-0421	1	Plate-Stop, Throttle
18	138-1224	1	Cable-Throttle
19	3290-148	2	Nut-HF
20	3256-22	1	Washer-Flat
21	99-3401	1	Lever-Lock
22	3290-477	1	Washer-Curved
23	63-3410	1	Screw-Shoulder
24	32128-32	3	Nut-HHF
25	87-4710	1	Spacer-Brake, Parking
26	321-10	1	Screw-HH
27	3296-42	1	Nut-Lock, NI
28	104-4817	1	Lever-Brake
29	104-4628	2	Link-Brake, Parking
30	283-62	1	Pin-Clevis
31	3256-23	3	Washer-Plain
32	3272-10	1	Pin-Cotter
33	94-3829	1	Pin-Clevis
34	3272-6	2	Pin-Cotter

● Not illustrated

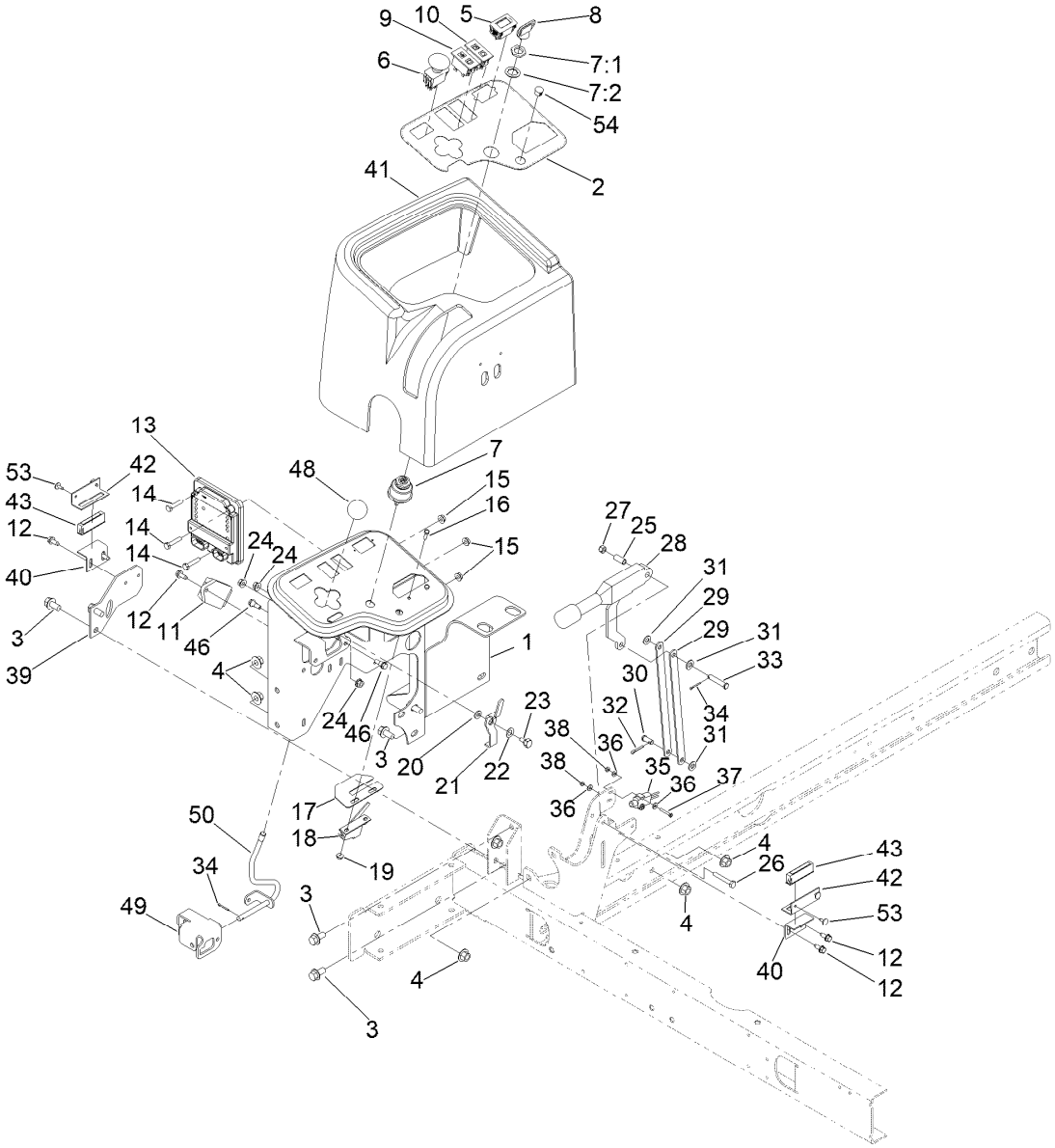

Control Panel Assembly (continued)

Ref.	Part Number	Qty.	Description
35	95-8900	1	Switch
36	3256-21	4	Washer-Flat
37	32105-9	2	Screw-HH
38	3296-9	2	Nut-Hex
39	95-8764-0P	1	Support-Magnet
40	95-8765	2	Bracket-Strike, Magnet
41	95-8707	1	Cover-Dash
42	95-8763	2	Bracket-Hold Down, Cover
43	58-4250	2	Catch-Magnetic

Ref.	Part Number	Qty.	Description
46	42-3560	2	Bolt-Shoulder
48	233-42	1	Knob
49	95-8633	1	Bracket-Valve, Actuator
50	95-8635	1	Lever-Valve
53	3269-5	4	Rivet-Pop
54	2410-64	1	Plug-Button
99	3290-378	1	Tie-Cable ●
99	3290-379	1	Tie-Cable ●

● Not illustrated

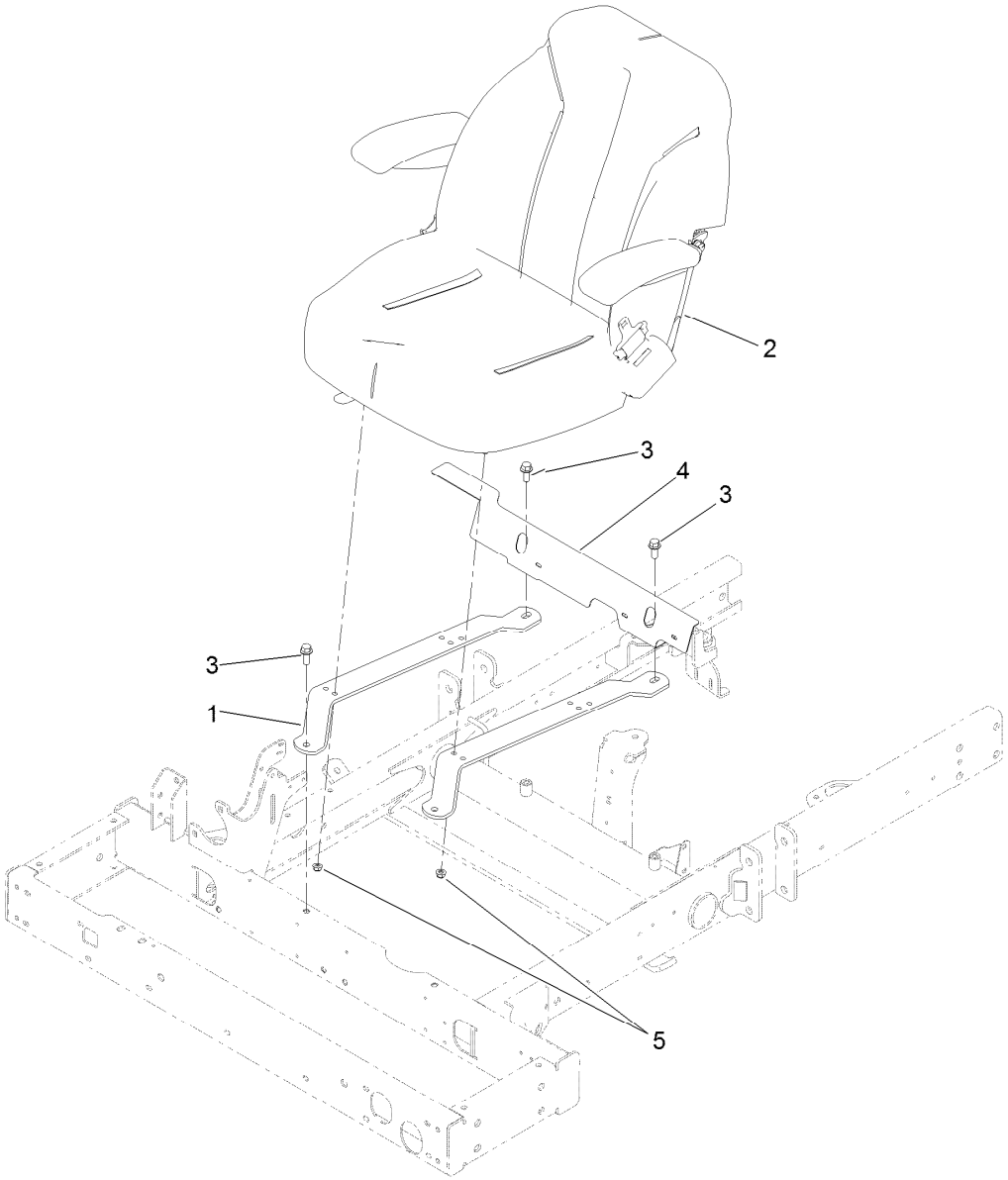

Seat Assembly

Ref.	Part Number	Qty.	Description
1	121-3665-03	2	Strap-Support, Seat
2	139-2679	1	Seat And Track ASM
3	3234-11	4	Screw-HHF
4	104-4833-03	1	Shield-Heat
5	104-8300	4	Nut-HF, NI

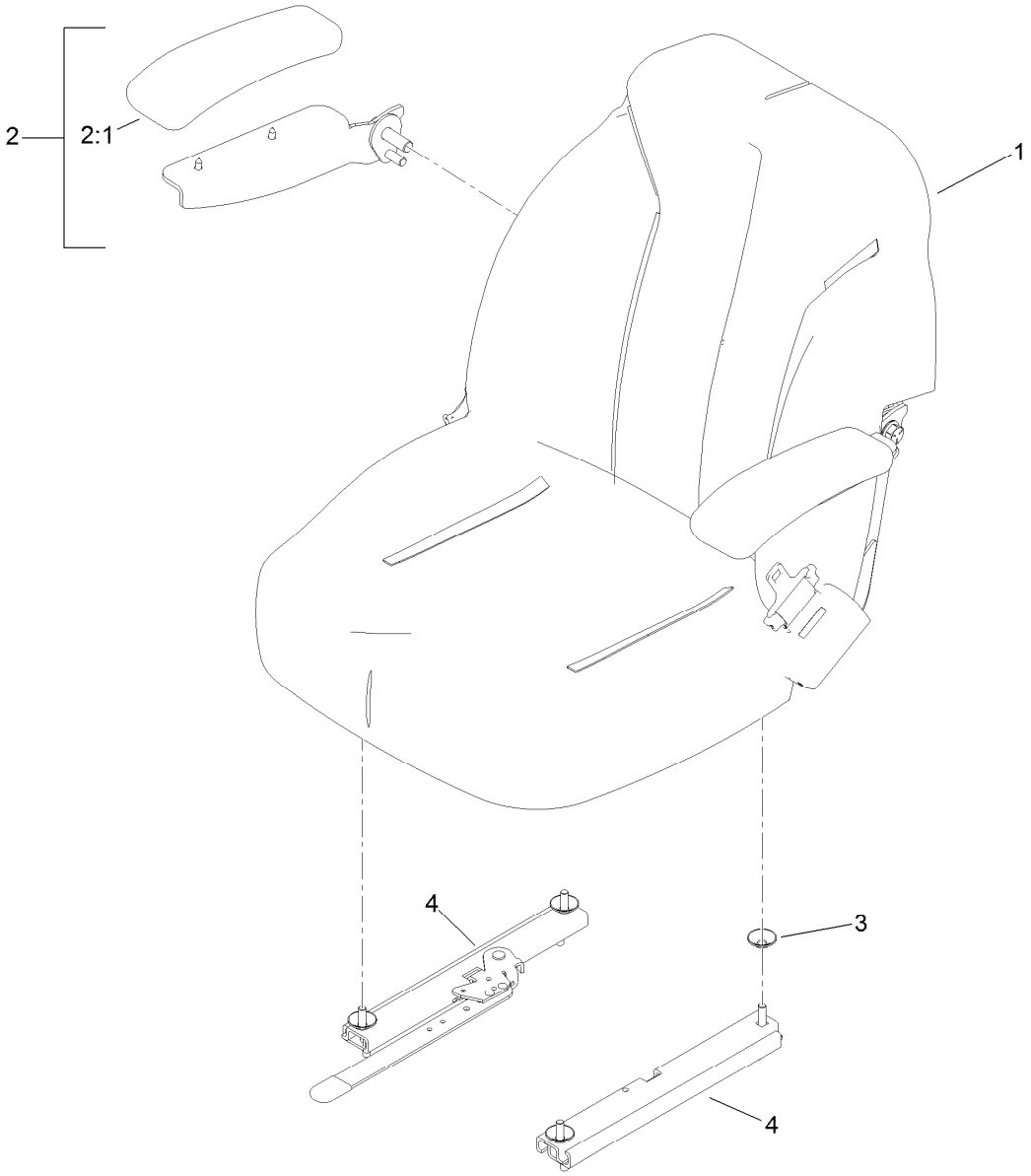

Seat and Track Assembly No. 139-2679

Ref.	*Part Number*	*Qty.*	*Description*
1	139-2700	1	Seat ASM
2	121-3658	1	RH Arm Rest Kit
2:1	110-4163	1	Cushion-Rest, Arm
3	136-9002	4	Spacer-Mounting
4	126-2177	1	Track-Seat

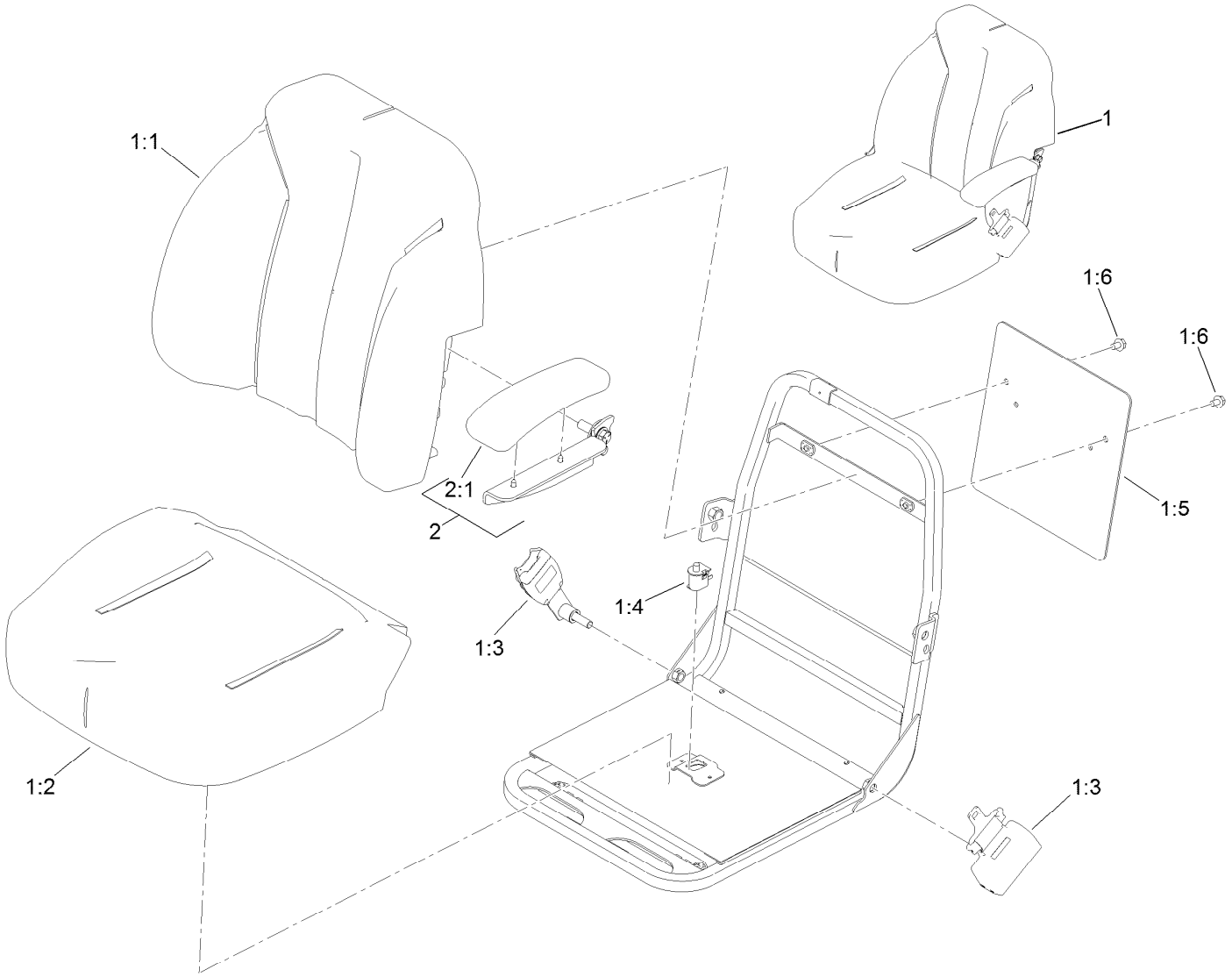

Seat Assembly No. 139-2700

Ref.	*Part Number*	*Qty.*	*Description*
1	139-2680	1	Seat ASM
1:1	145-0083	1	Cover-Seat, Back
1:2	145-0084	1	Cover-Seat, Bottom
1:3	139-2707	1	Seat Belt Kit
1:4	82-2190	1	Switch-Bail
1:5	139-2701	1	Plate-Decal
1:6	3234-30	2	Screw-HHF
2	121-3660	1	LH Arm Rest Kit
2:1	110-4163	1	Cushion-Rest, Arm

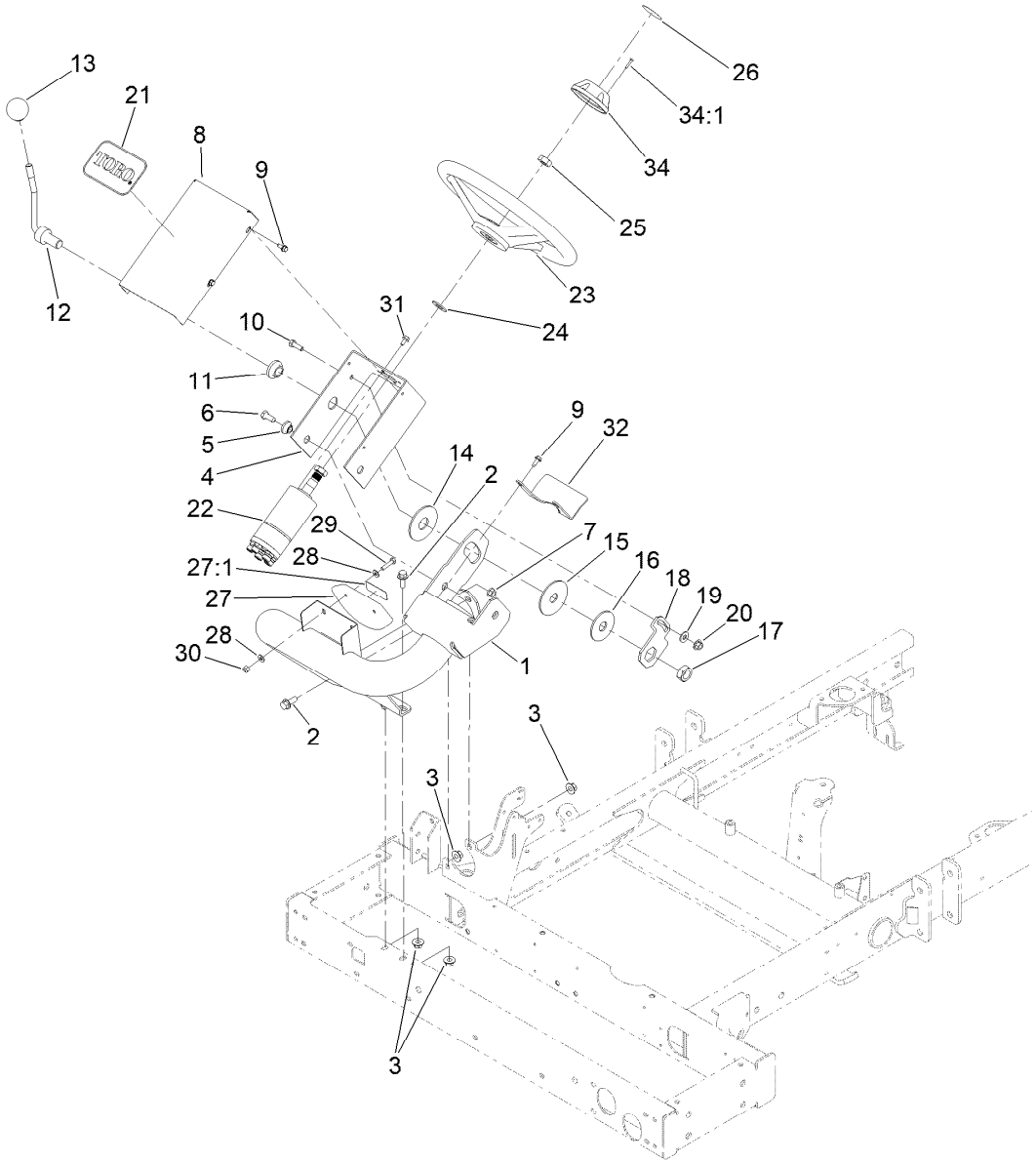

Steering Column Assembly

Ref.	Part Number	Qty.	Description
1	105-8536-01	1	Arm-Steering
2	3234-11	4	Screw-HHF
3	32128-43	4	Nut-Flange
4	104-5185-01	1	Bracket-Valve, Steering
5	93-5988	2	Hub-Pivot
6	323-5	2	Screw-HH
7	32128-21	2	Nut-HF Lock
8	95-8794-01	1	Cover-Valve, Steering
9	32144-10	5	Screw-HWH
10	322-5	1	Screw-HH
11	99-3502	1	Boss
12	95-8798-03	1	Lever-Steering
13	233-48	1	Knob
14	31-0390	1	Disc-Friction
15	82-9010	1	Disc-Friction
16	80-2930	1	Washer-Flat
17	3218-7	1	Nut-Jam
18	80-2880	1	Bracket-Tilt

Ref.	Part Number	Qty.	Description
19	3256-3	1	Washer-Flat
20	32128-44	1	Nut
21	67-1300	1	Decal
22	121-7856	1	Steering Valve ASM
23	145-0051	1	Steering Wheel
24	3256-27	1	Washer-Flat
25	3296-33	1	Nut-Lock, NI
26	68-5370	1	Decal
27	100-4929	1	Slope Indicator ASM
27:1	121-3598	1	Decal-Danger, 17 Degree
27:1	121-3628	1	Decal-Angle
28	3256-22	4	Washer-Flat
29	321-7	2	Screw-HH
30	3296-42	2	Nut-Lock, NI
31	33103-012	4	Screw-HHF
32	99-3405-01	1	Shield-Steering
34	68-5140	1	Cap-Wheel, Steering
34:1	32144-21	1	Screw

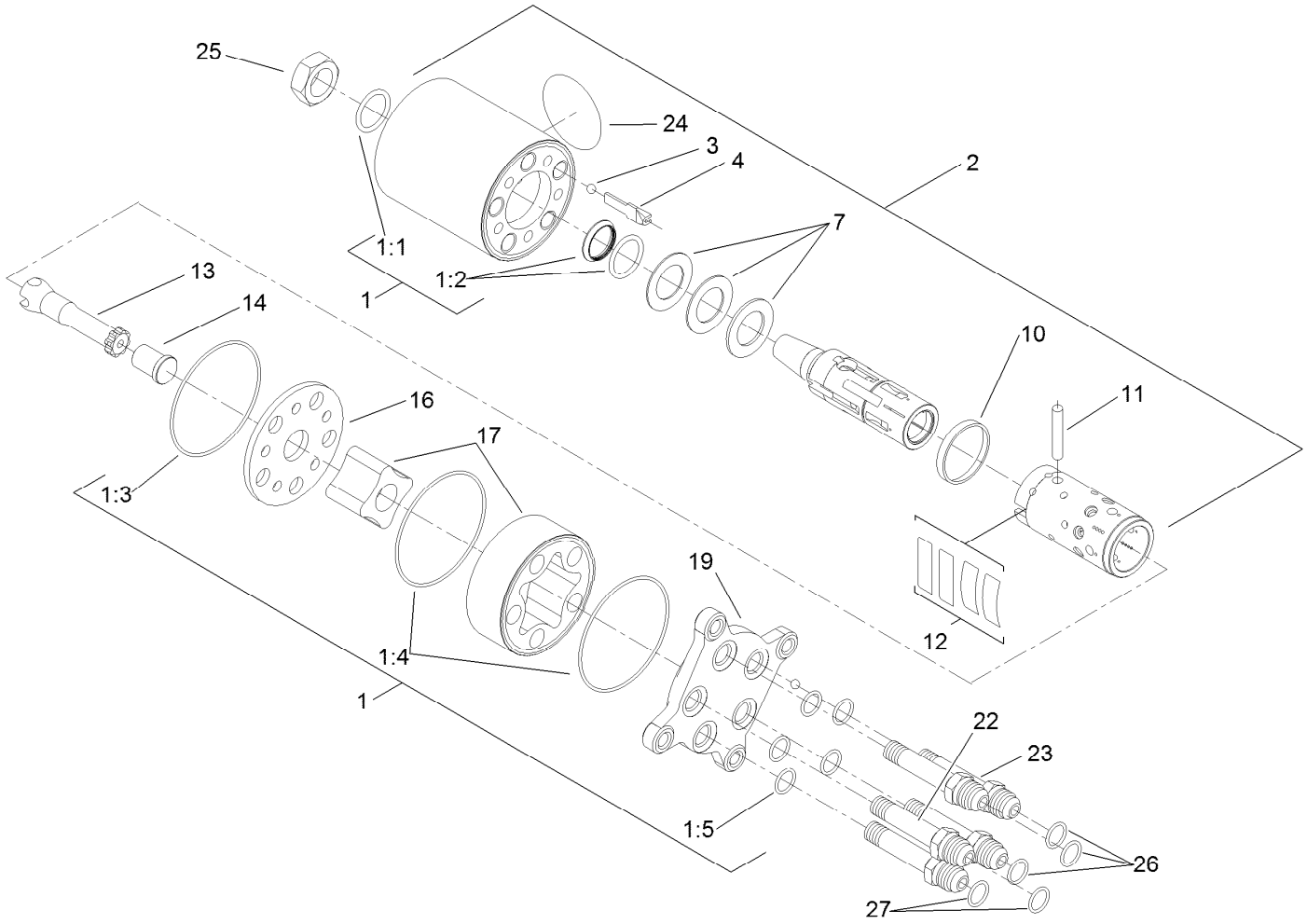

Steering Valve Assembly No. 121-7856

Ref.	Part Number	Qty.	Description
1	106-6716	1	Seal Kit
1:1		1	Ring-Seal, Dust ●
1:2		1	Seal-Shaft ●
1:3		1	O-Ring ●
1:4		2	O-Ring ●
1:5		5	O-Ring ●
2		1	Housing ●
3		1	Ball ●
4		1	Stop-Ball ●
7		1	Bearing ASM ●
10		1	Ring ●
11		1	Pin-Cross ●

Ref.	Part Number	Qty.	Description
12		1	Springs ●
13		1	Shaft ●
14		1	Spacer ●
16		1	Plate-Distributor ●
17		1	Gearwheel Set ●
19		1	Cover-End ●
22		1	Screw-Special ●
23		4	Screw-Special ●
24		1	Plate-Name ●
25	3296-33	1	Nut-Lock, NI
26	237-22	3	O-Ring
27	237-21	2	O-Ring

● Not serviced separately

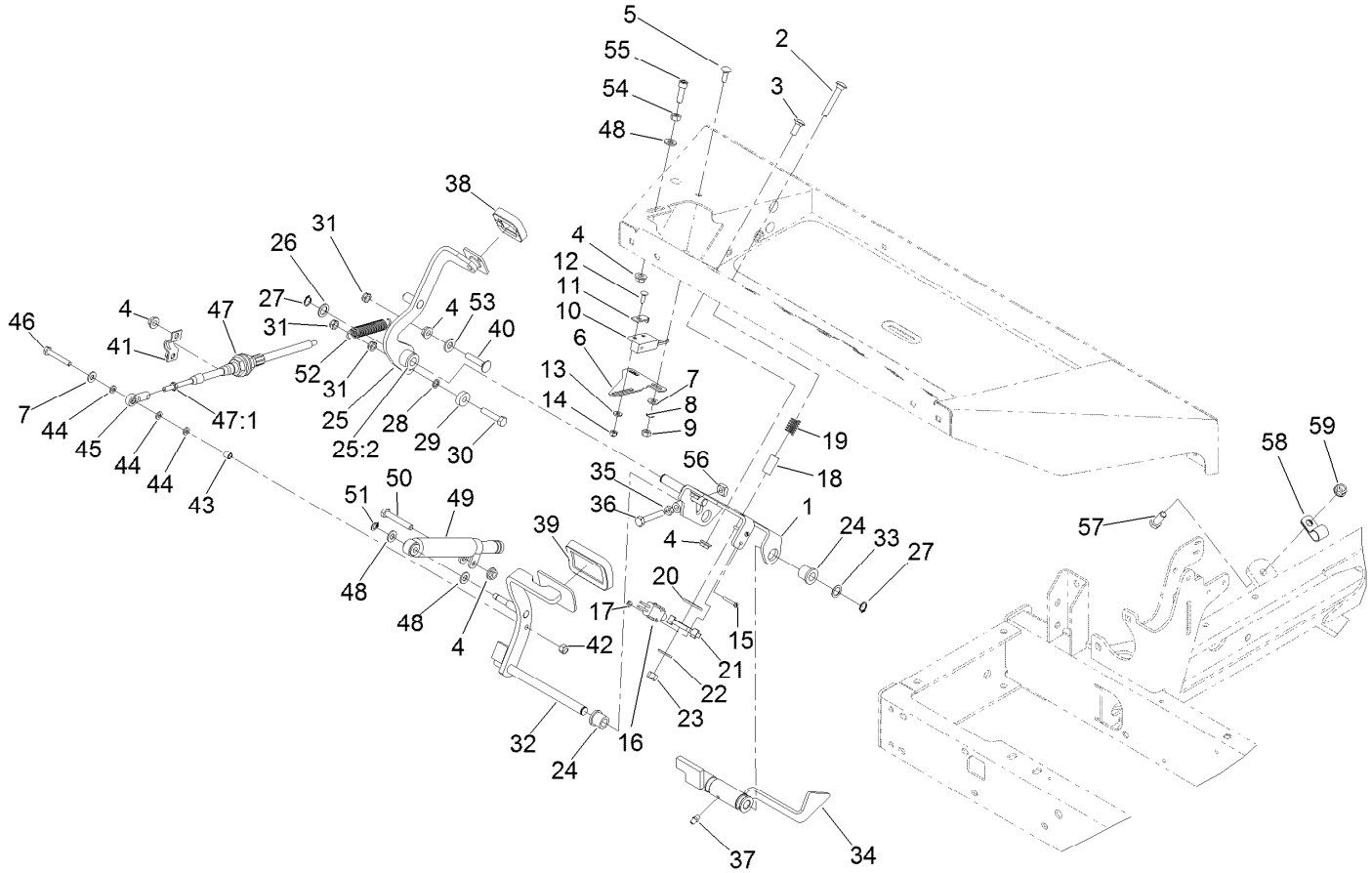

Pedal Assembly

Ref.	Part Number	Qty.	Description
1	95-8869-0P	1	Bracket-Pedal, Traction
2	3230-6	1	Bolt-CARR
3	3230-23	4	Bolt-CARR
4	32128-20	8	Nut-HF
5	3229-1	2	Screw-CARR
6	100-4871	1	Bracket-Switch, Neutral
7	3256-22	3	Washer-Flat
8	3255-7	2	Washer-Lock/EXT
9	3217-5	2	Nut-Hex
10	100-1270	1	Switch-Proximity
11	100-4872	1	Plate-Switch, Neutral
12	3229-20	1	Screw-CARR
13	3256-14	1	Washer-Flat
14	3296-2	1	Nut-Lock, NI
15	32105-9	2	Screw-HH
16	95-8900	1	Switch
17	3296-9	2	Nut-Hex
18	95-8866	1	Tube-Arm, Rocker

Ref.	Part Number	Qty.	Description
19	65-9940	1	Spring
20	3256-40	1	Washer-Flat
21	99-3593	1	Arm-Rocker
22	3256-3	1	Washer-Flat
23	3296-29	1	Nut-Lock, NI
24	256-243	2	Bearing-Flange
25	99-3379	1	Pedal-Reverse ASM
25:2	256-243	2	Bearing-Flange
26	41-8440	1	Washer
27	32151-84	2	Ring-Shaft, EXT
28	75-5470	1	Spacer-Bearing
29	251-259	1	Bearing-Ball
30	322-7	1	Screw-HH
31	3296-47	3	Nut-Lock,NI
32	104-4852-03	1	Pedal-Traction
33	73-0040	1	Washer-Thrust
34	95-8861	1	Slide
35	3218-2	1	Nut-Hex Jam

● Not illustrated

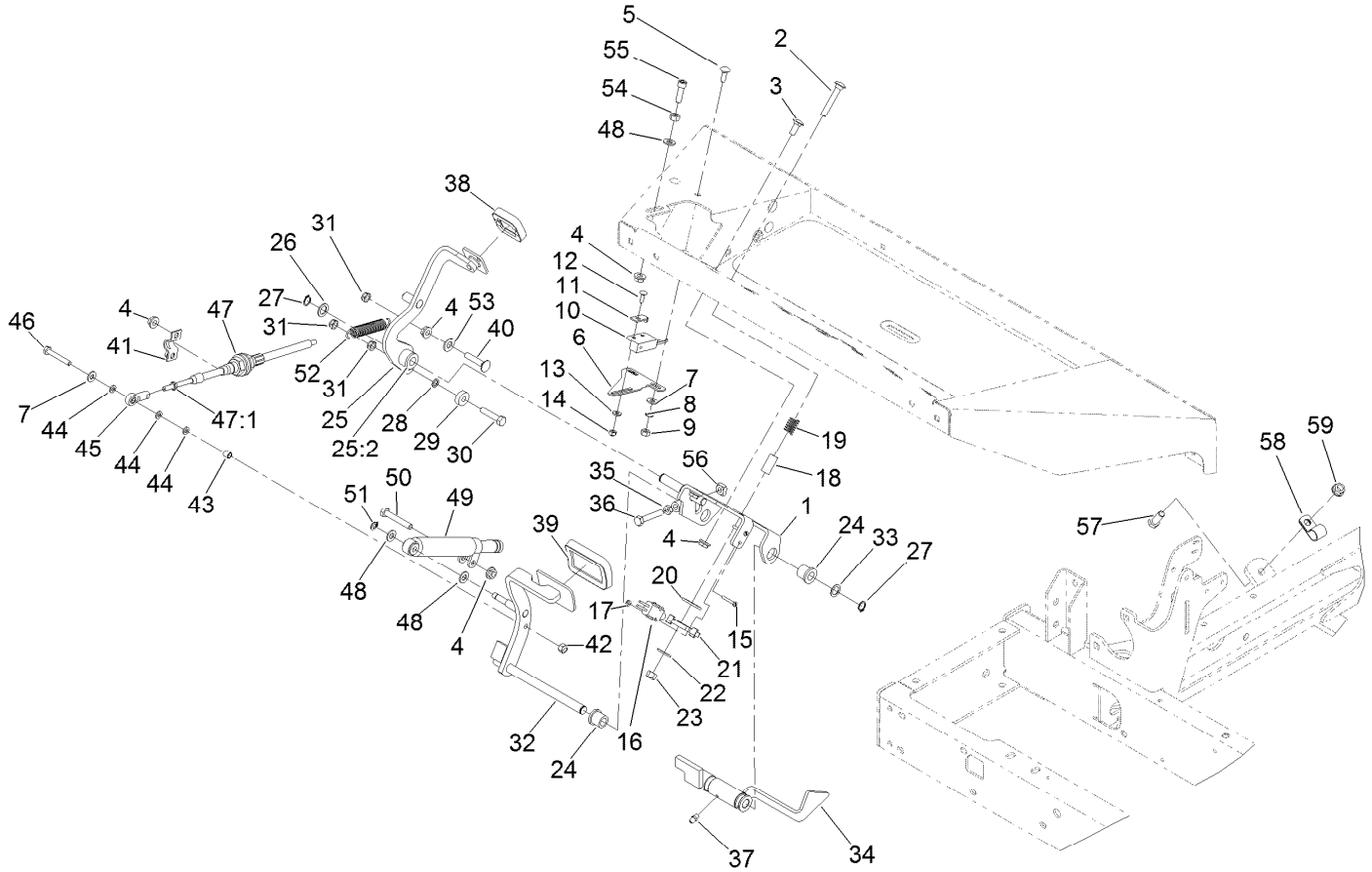

Pedal Assembly (continued)

Ref.	Part Number	Qty.	Description
36	322-41	1	Bolt-Hex,TAP
37	302-5	1	Fitting-Grease
38	74-9110	1	Pad-Pedal, Reverse
39	74-9100	1	Pad-Pedal, Forward
40	3230-27	1	Screw-CARR
41	93-2092	1	Clamp-Cable
42	3296-42	1	Nut-Lock, NI
43	99-3545	1	Spacer
44	33093-00	3	Washer-Flat
45	2411-41	1	Rod End-Ball Joint
46	321-10	1	Screw-HH
47	100-4815	1	Cable-Control, Traction
47:1	3220-1	2	Nut-Jam

Ref.	Part Number	Qty.	Description
48	3256-23	3	Washer-Plain
49	140-6248	1	Damper
50	322-10	1	Screw-HH
51	32151-3	1	Ring-Grip
52	99-3476	1	Spring-Extension
53	3256-24	1	Washer-Plain
54	3217-6	1	Nut-Hex
55	3274-22	1	Screw-HSH
56	99-3565	1	Nut-Square
57	323-6	1	Screw-HH
58	2412-41	1	Clamp-R
59	3290-357	1	Nut-HSF
99	3290-378	4	Tie-Cable ●

● Not illustrated

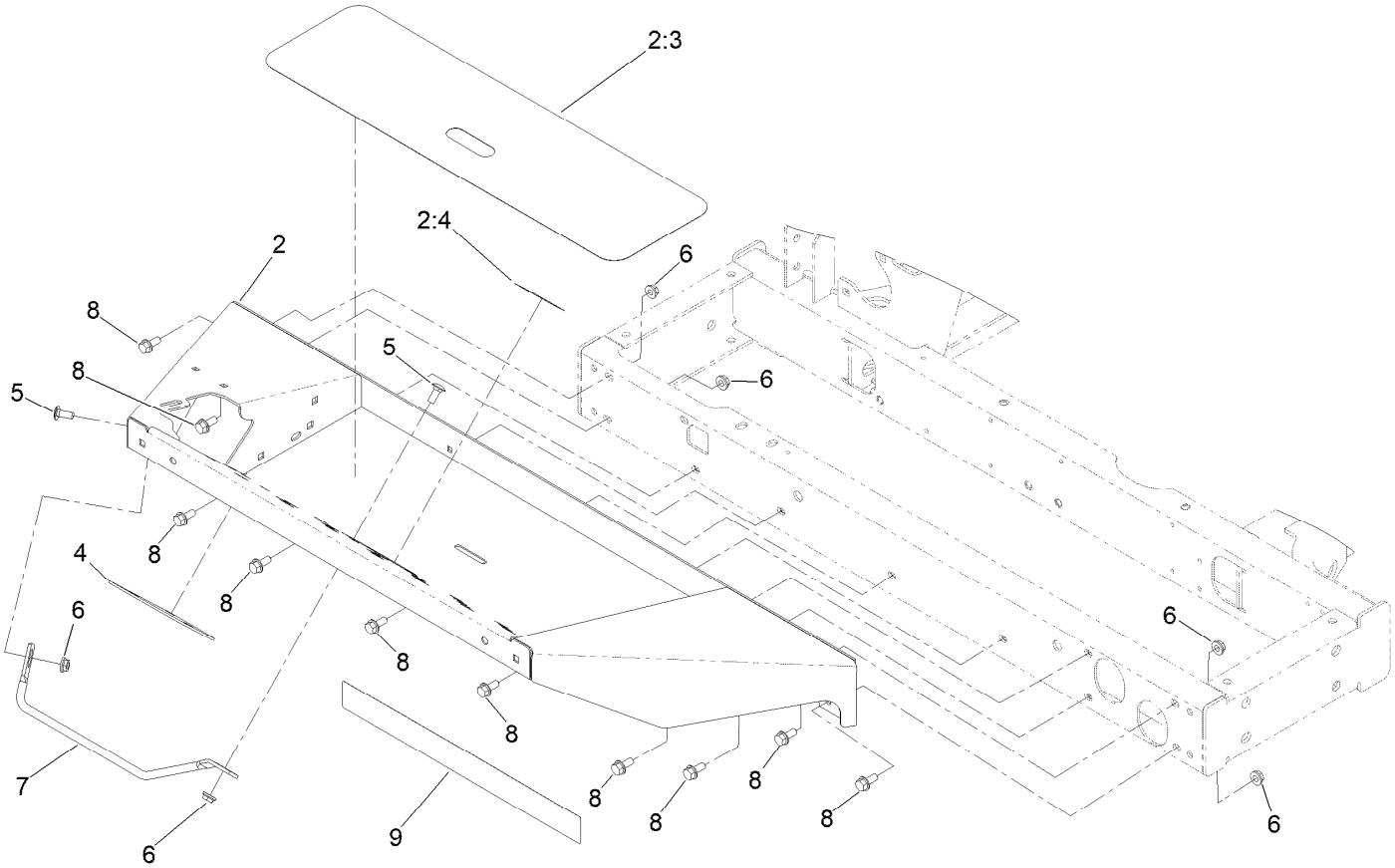

Floor Plate Assembly

Ref.	*Part Number*	*Qty.*	*Description*
2	106-4154	1	Floorplate ASM
2:3	99-3478	1	Tread-Foot
2:4	99-3444	1	Decal-Mow / Transport
4	106-2661-0P	1	Plate-Support
5	3230-23	2	Bolt-CARR
6	32128-20	12	Nut-HF
7	95-8893	1	Bar-Deflector
8	3234-5	10	Screw-HHF
9	99-3388	1	Decal

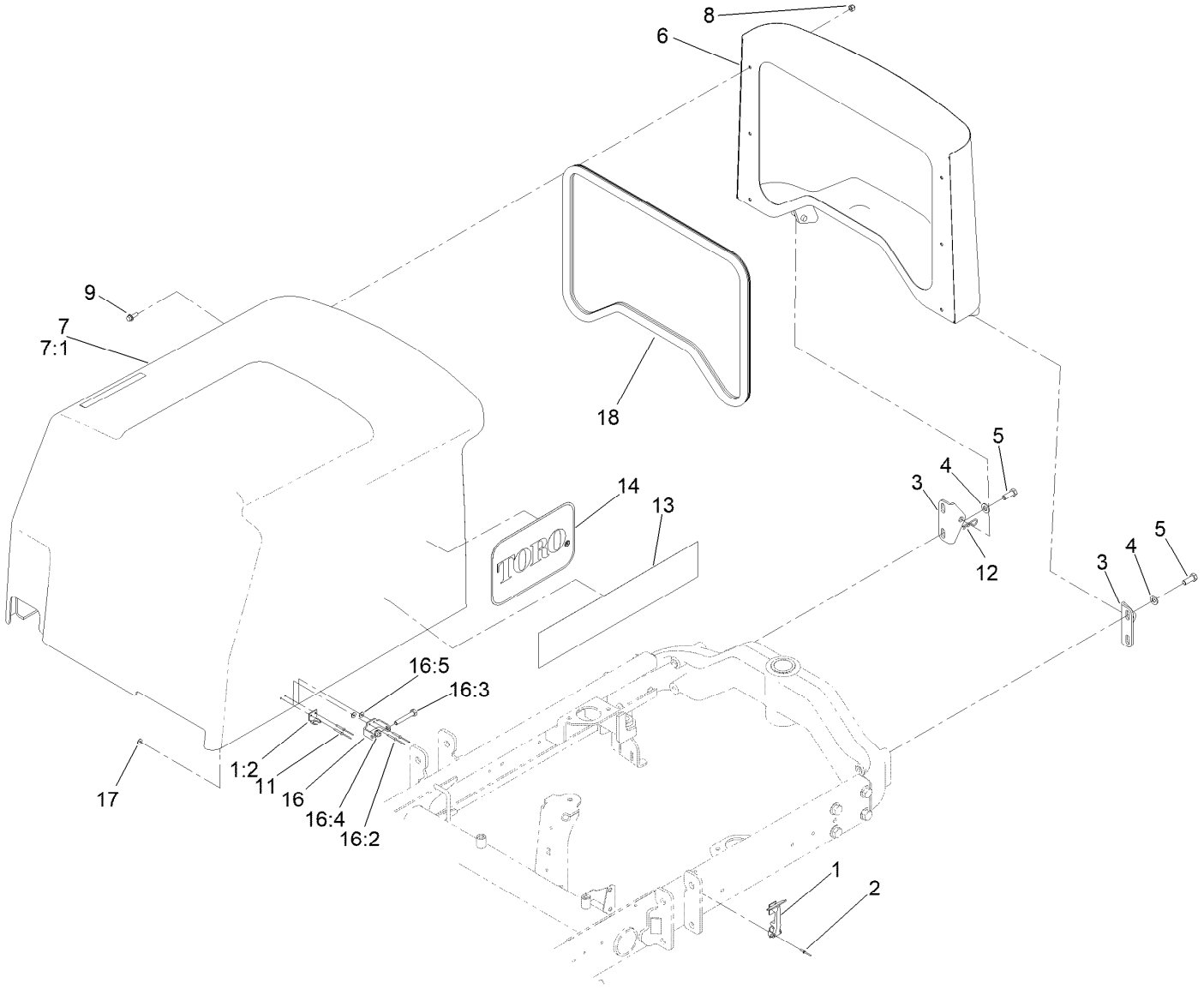

Hood Assembly

Ref.	Part Number	Qty.	Description
1	59-9740	2	Flex Draw Latch ASM
1:2	249-40	1	Keeper
2	3290-55	4	Rivet-Pop
3	95-8728	2	Bracket-Pivot, Hood
4	3256-24	4	Washer-Plain
5	323-6	4	Screw-HH
6	95-8724-03	1	Screen-Hood
7	121-3633	1	Hood ASM
7:1		1	Hood ■
7:1:1	106-8114	1	Heat Tape Repair Kit ●
8	3296-42	6	Nut-Lock, NI
9	3234-4	6	Screw-HHF

Ref.	Part Number	Qty.	Description
11	107-0333	4	Rivet-Pop
12	3290-467	1	Pin-Hair
13	104-5153	2	Decal-Hood
14	66-6140	2	Decal
16	119-2004	1	CE Latch Kit
16:2	107-0333	2	Rivet-Pop
16:3	322-10	1	Screw-HH
16:4	3296-47	1	Nut-Lock,NI
16:5	3269-10	2	Washer-Back
17	3269-10	4	Washer-Back
18	95-8809	1	Trim-Seal

● Not illustrated

■ Not serviced separately

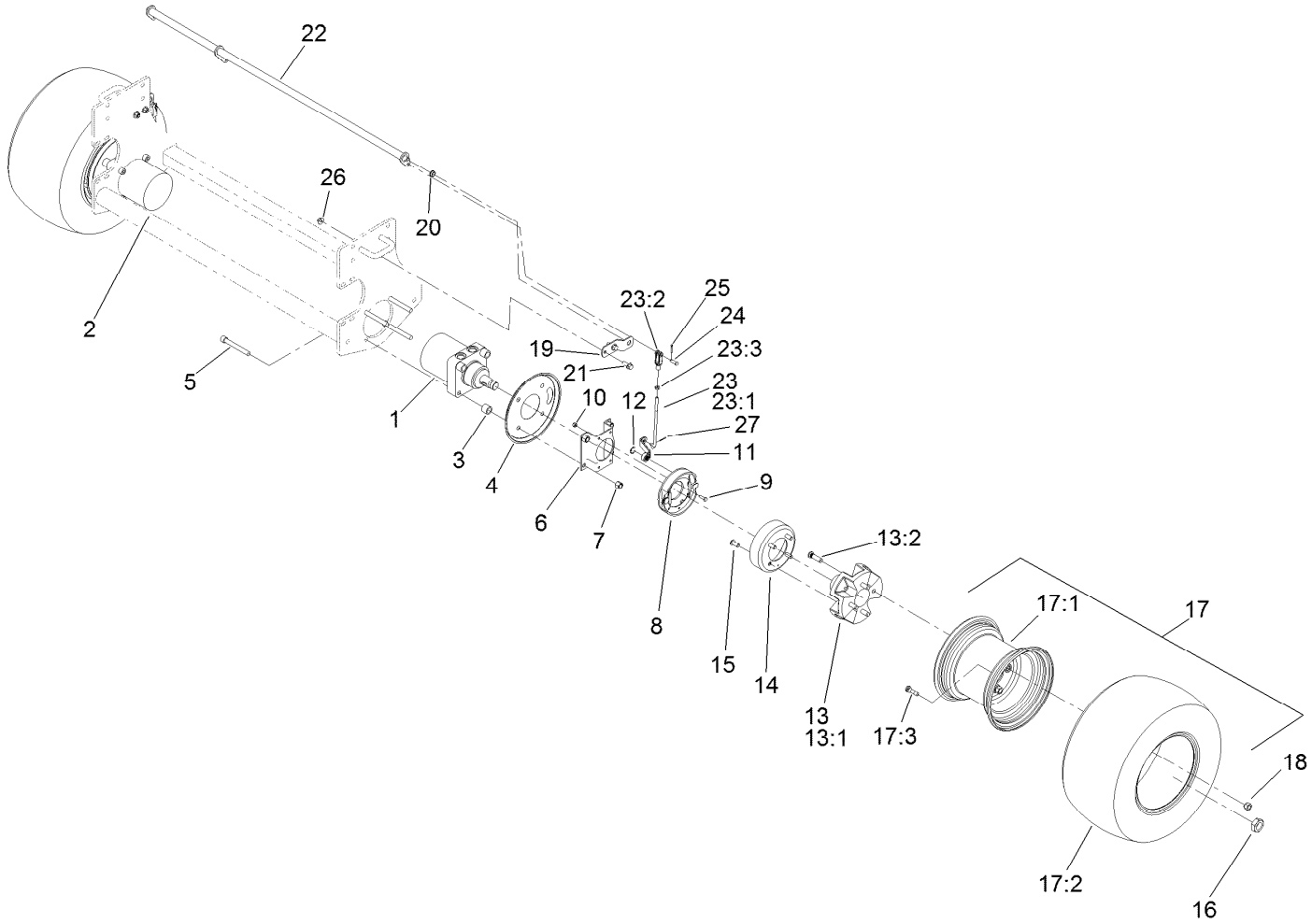

Hydraulic Drive and Wheel Assembly

Ref.	Part Number	Qty.	Description
1	110-8785	1	HYD Motor ASM (CCW)
2	110-8786	1	HYD Motor ASM (CW)
3	119-8238	8	Spacer-Deck Pulley
4	104-0485-0P	2	Shield-Wheel
5	3274-99	8	Screw-HSH
6	84-2000-0P	2	Bracket-Brake
7	3296-23	8	Nut-Lock, NI
8	104-7705	2	Brake ASM
9	321-5	8	Screw-HH
10	3296-42	8	Nut-Lock, NI
11	114-2726	2	Lever-Brake
12	104-7706	2	E-Ring, Bowed
13		2	Wheel Hub/Stud ASM ●
13:1	104-0462	1	Hub-Wheel, Spacer
13:2	10-6830	4	Stud-Type, Drive
14	104-4809	2	Drum-Brake
15	3274-105	8	Screw-HSBH
16	26-3790	2	Nut-Lock

Ref.	Part Number	Qty.	Description
17		2	Tire And Rim ASM ●
17:1	121-3548	1	Rim
17:2	117-5125	1	Tire
17:3	232-27	1	Stem-Valve
18	242-50	8	Nut-Lug
19	95-8683	2	Bracket-Pivot, Brake
20	256-156	2	Bushing-Flange
21	3234-11	4	Screw-HHF
22	104-4625-03	1	Shaft-Pivot, Brake
23	115-6672	2	Brake Lever ASM
23:1	104-4627	1	Rod-Adjusting
23:2	1-303105	1	Yoke-Adjustable
23:3	3220-2	1	Nut-Jam
24	283-1	2	Pin-Clevis
25	3272-10	2	Pin-Cotter
26	32128-43	4	Nut-Flange
27	3272-6	2	Pin-Cotter

● Not serviced separately

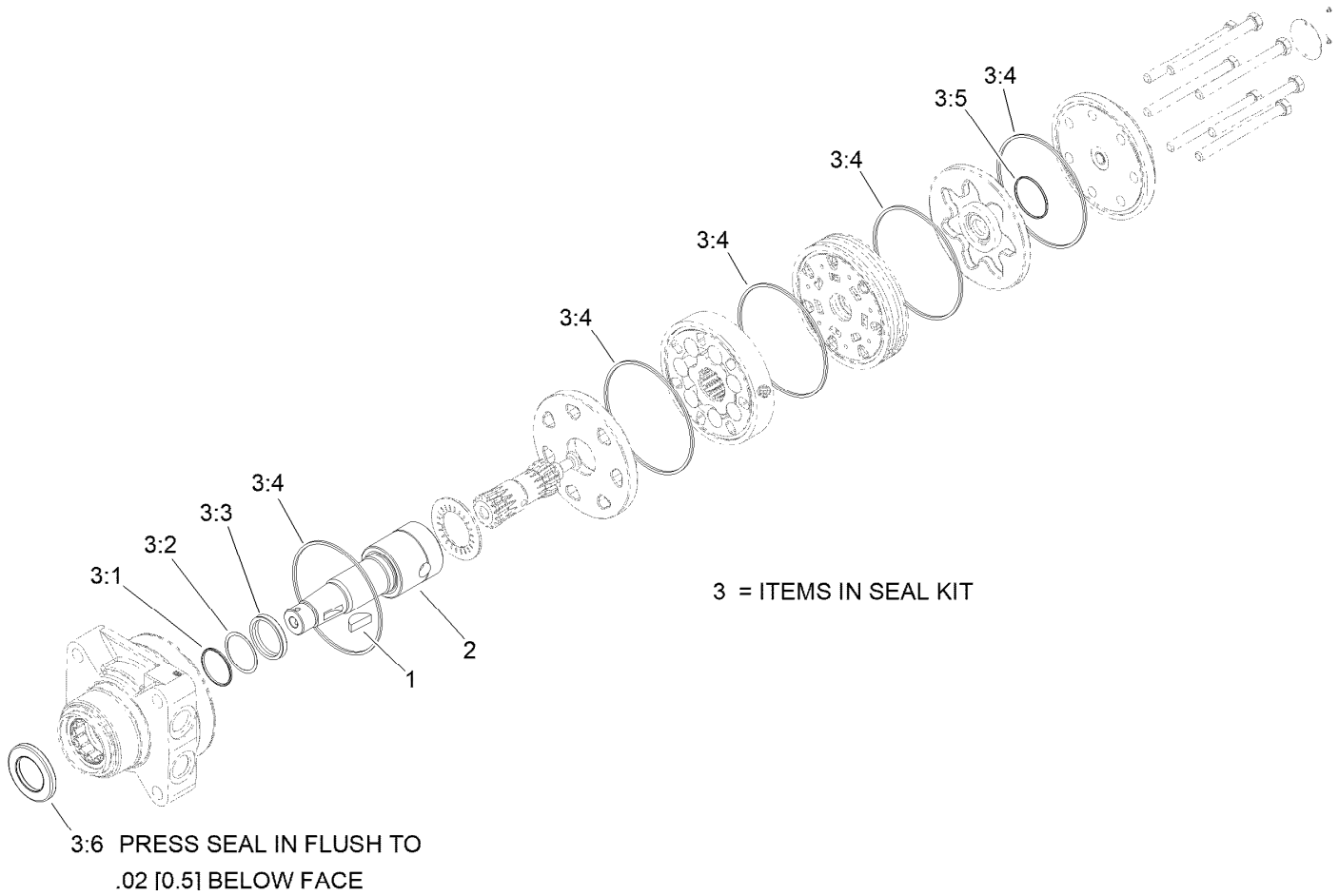

Hydraulic Motor Assembly No. 110-8785

Ref.	*Part Number*	*Qty.*	*Description*
1	3257-42	1	Key-Woodruff
2	99-3090	1	Shaft-Coupling
3	100-6131	1	Seal Kit
3:1		1	Ring-Back Up ●
3:2		1	Washer-Back Up ●
3:3		1	Seal-Shaft ●
3:4		5	Seal-Ring ●
3:5		1	Seal-Commutator ●
3:6		1	Seal-Dirt And Water ●

● Not serviced separately

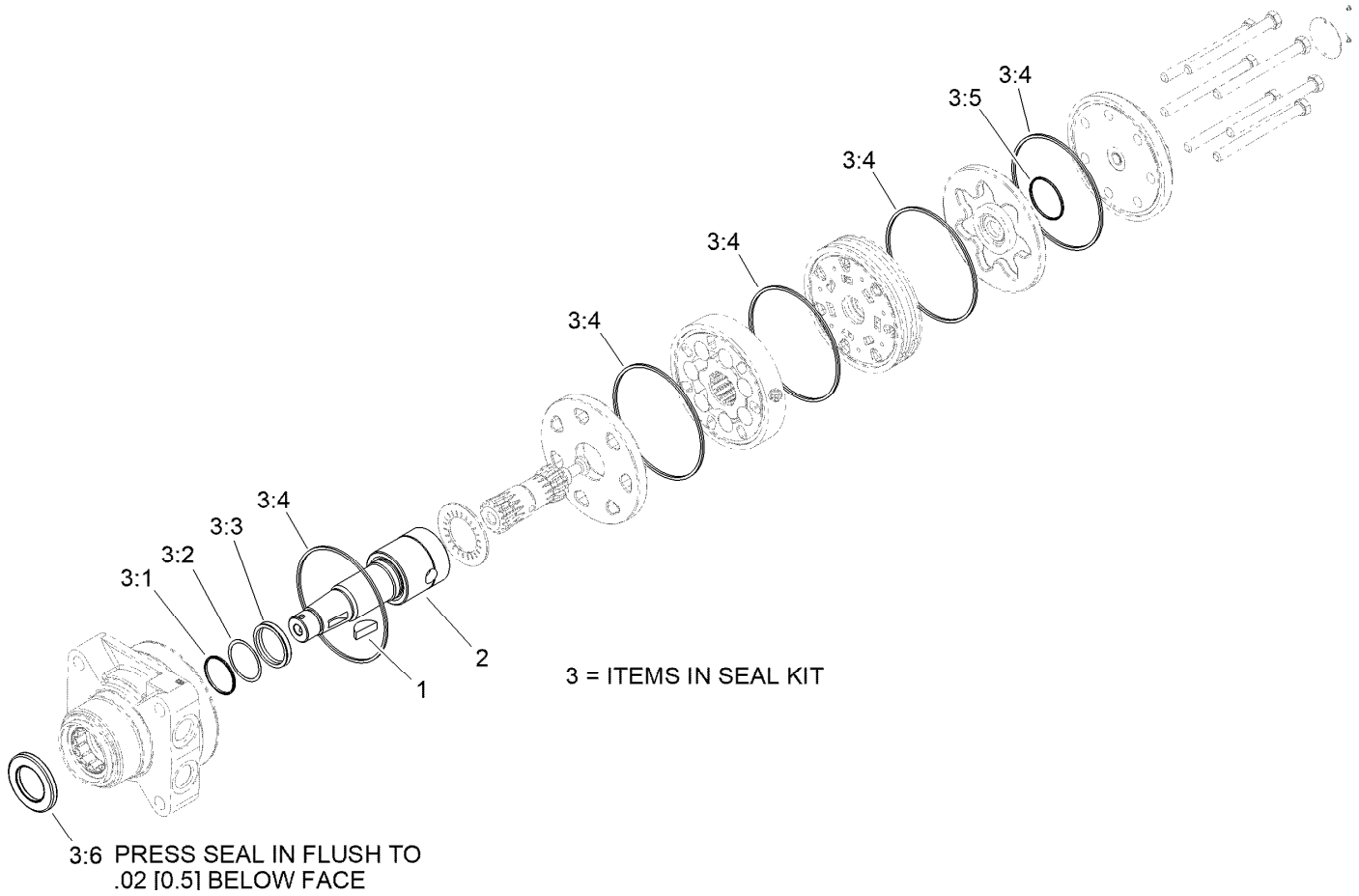

Hydraulic Motor Assembly No. 110-8786

Ref.	*Part Number*	*Qty.*	*Description*
1	3257-42	1	Key-Woodruff
2	99-3090	1	Shaft-Coupling
3	100-6131	1	Seal Kit
3:1		1	Ring-Back Up ●
3:2		1	Washer-Back Up ●
3:3		1	Seal-Shaft ●
3:4		5	Seal-Ring ●
3:5		1	Seal-Commutator ●
3:6		1	Seal-Dirt And Water ●

● Not serviced separately

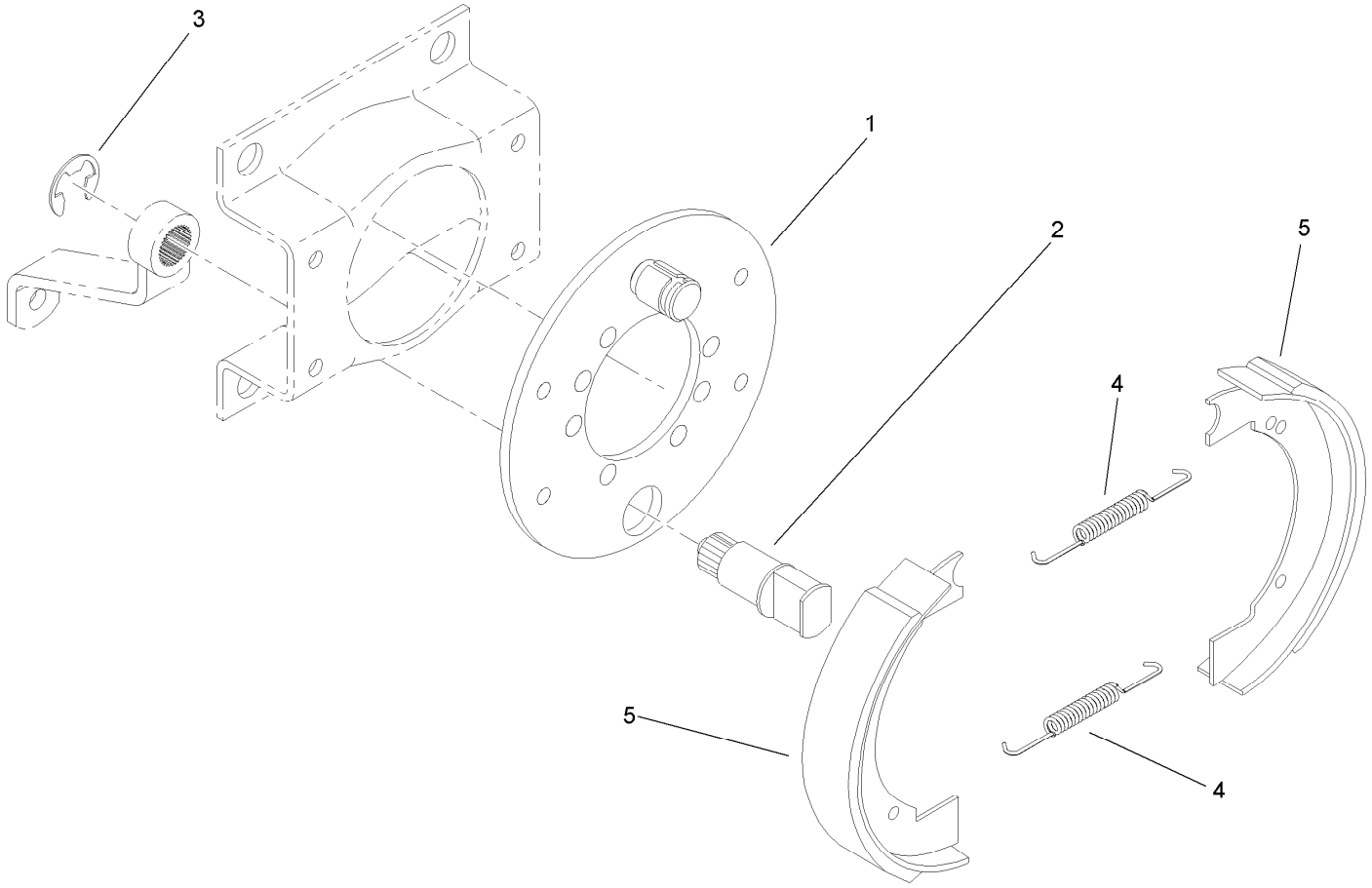

Brake Assembly No. 104-7705

Ref.	*Part Number*	*Qty.*	*Description*
1	70-9870	1	Plate-Backing
2	104-7707	1	Shaft-Cam, Brake
3	104-7706	1	E-Ring, Bowed
4	70-9880	2	Spring-Return
5	70-9840	2	Shoe-Brake

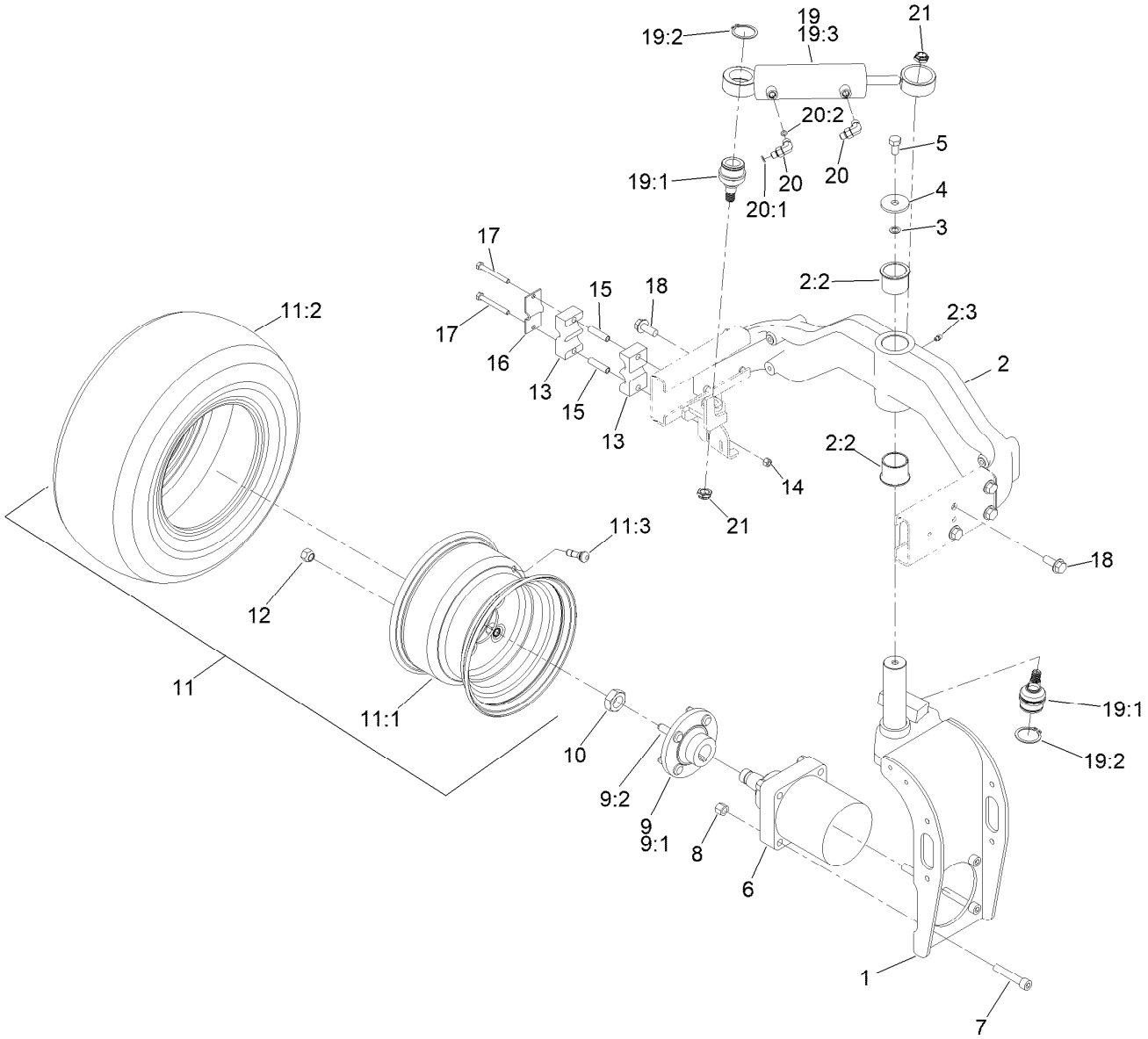

Rear Fork and Tire Assembly

Ref.	Part Number	Qty.	Description
1	136-3812-01	1	Fork-Rear
2	127-8576	1	Rear Casting ASM
2:2	127-8572	2	Bushing-Flange
2:3	302-5	1	Fitting-Grease
3	3255-2	1	Washer-Lock, EXT
4	75-7730	1	Washer-Thrust
5	325-3	1	Screw-HH
6	95-8694	1	HYD Motor ASM
7	3274-93	4	Screw-HSH
8	3296-23	4	Nut-Lock, NI
9	18-3209	1	Wheel Hub/Stud ASM
9:1	10-6870-03	1	Hub-Wheel
9:2	10-6830	4	Stud-Type, Drive
10	26-3790	1	Nut-Lock
11		1	Wheel And Tire ASM ●
11:1	117-5129	1	Rim
11:2	115-1572	1	Tire

Ref.	Part Number	Qty.	Description
11:3	232-27	1	Stem-Valve
12	242-50	4	Nut-Lug
13	82-8170	2	Clamp
14	3296-29	2	Nut-Lock, NI
15	93-7960	2	Spacer
16	93-7961	1	Clamp-Drain, Case
17	322-13	2	Screw-HH
18	3234-38	8	Screw-HHF
19		1	Steering Cylinder ASM ●
19:1	121-3605	2	Ball Joint
19:2	32151-104	2	Ring-Retaining, External
19:3	121-3653	1	Cylinder-HYD
20	340-132	2	Fitting-Elbow, 90 DEG
20:1	237-78	1	O-Ring
20:2	237-21	1	O-Ring
21	121-3611	2	Nut-Hex, Flextop

● Not serviced separately

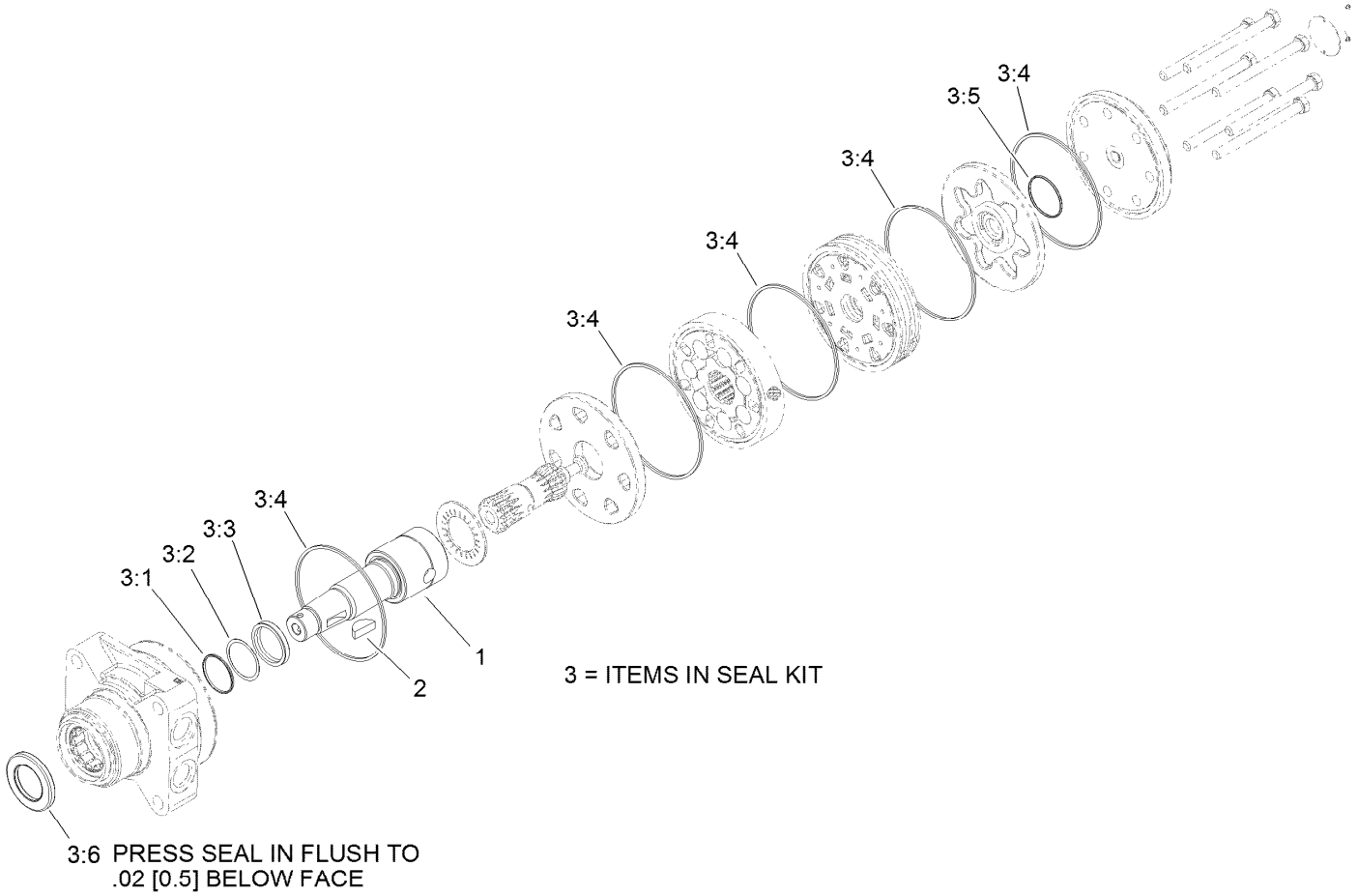

Hydraulic Motor Assembly No. 95-8694

Ref.	*Part Number*	*Qty.*	*Description*
1	99-3090	1	Shaft-Coupling
2	3257-42	1	Key-Woodruff
3	100-6131	1	Seal Kit
3:1		1	Ring-Back Up ●
3:2		1	Washer-Back Up ●
3:3		1	Seal-Shaft ●
3:4		5	Seal-Ring ●
3:5		1	Seal-Commutator ●
3:6		1	Seal-Dirt And Water ●

● Not serviced separately

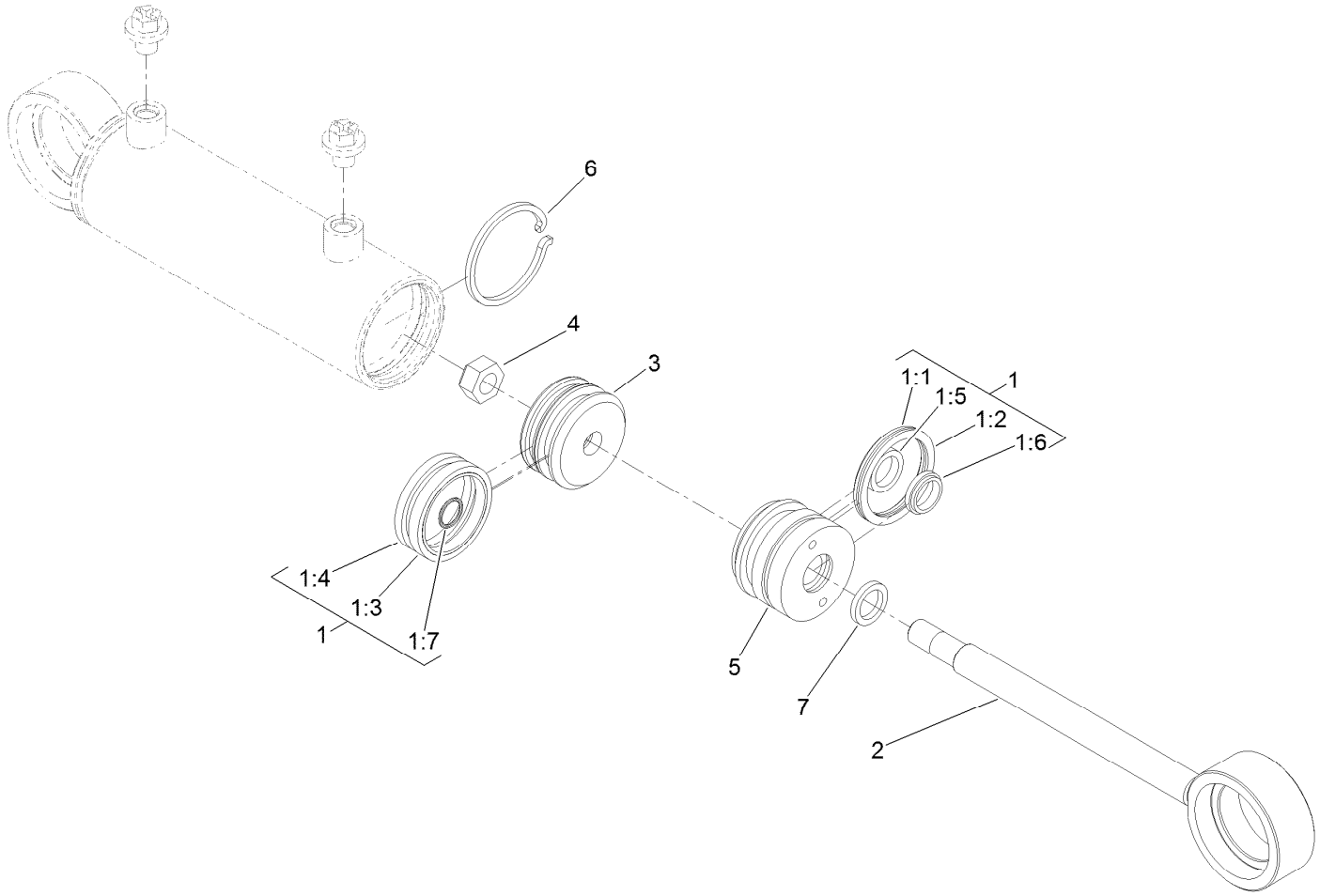

Hydraulic Cylinder Assembly No. 121-3653

Ref.	*Part Number*	*Qty.*	*Description*
1	136-3278	1	Seal Kit
1:1		1	O-Ring ●
1:2		1	Backup ●
1:3		1	Psp Seal ●
1:4		1	Wear Ring ●
1:5		1	Bt Seal ●
1:6		1	Dust Seal ●
1:7		1	O-Ring ●
2		1	Rod ●
3		1	Piston ●
4		1	Head ●
5		1	Lock Nut ●
6		1	Retaining Ring ●
7		1	Square O-Ring ●

● Not serviced separately

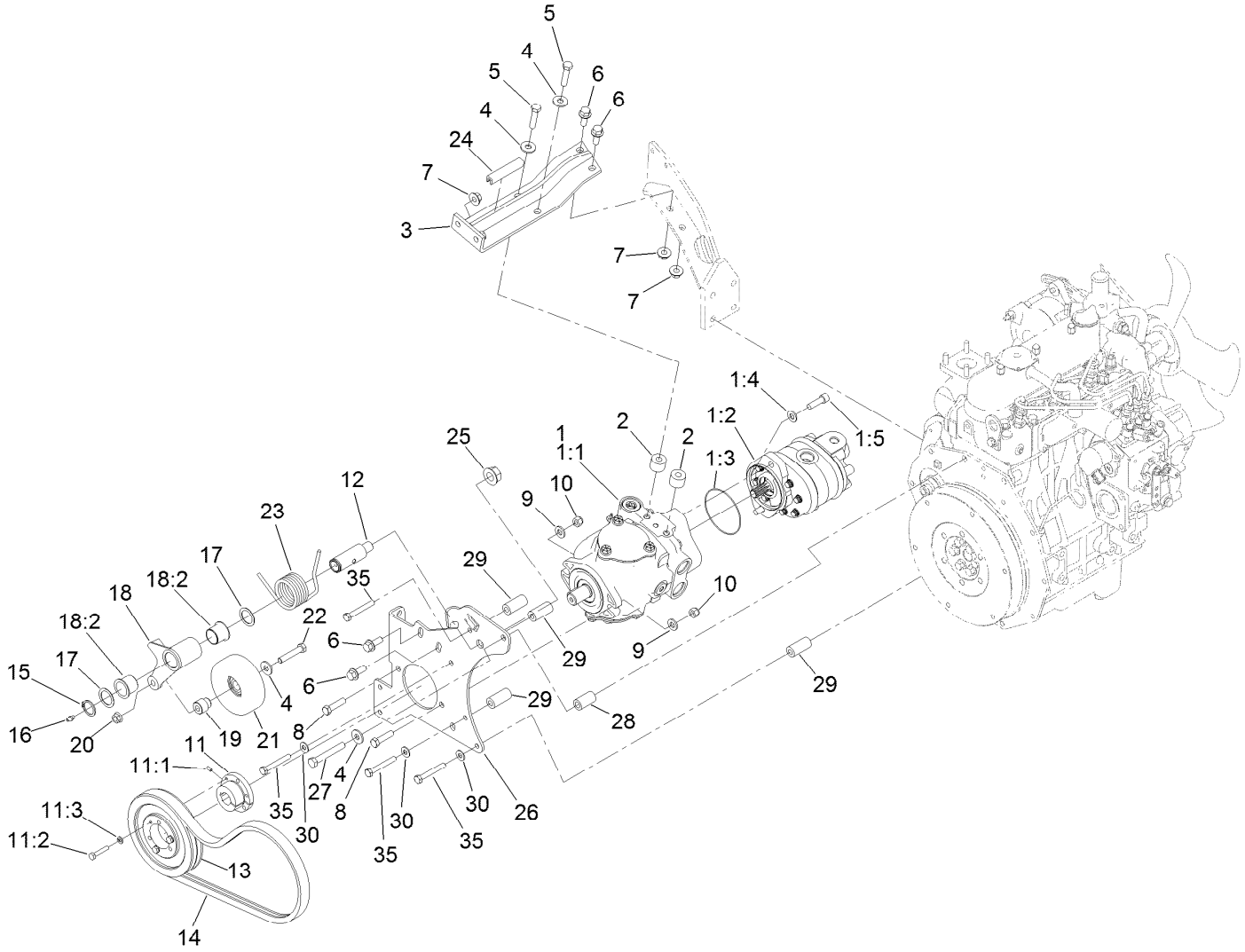

Tandem Hydraulic Pump Assembly

Ref.	Part Number	Qty.	Description
1		1	Tandem Pump ASM ●
1:1	104-4890	1	Piston Pump ASM
1:2	95-8601	1	Gear Pump ASM
1:3	60-3520	1	O-Ring
1:4	3256-24	2	Washer-Plain
1:5	3274-1	2	Screw-HSH
2	99-3440	2	Spacer
3	99-3436-0P	1	Support-Pump
4	80-6990	4	Washer-Hardened
5	323-19	2	Screw-HH
6	3234-11	4	Screw-HHF
7	32128-43	4	Nut-Flange
8	323-8	2	Screw-HH
9	100-4852	2	Washer-Hardened
10	3296-39	2	Nut-Lock, NI
11	93-6842	1	Bushing-Lock, Taper
11:1	3245-36	1	Screw-Set, HSH
11:2	321-13	3	Screw-HH

Ref.	Part Number	Qty.	Description
11:3	3253-3	3	Washer-Lock
12	99-3529	1	Shaft-Pivot, Idler
13	93-6841	1	Pulley
14	95-8730	1	V-Belt
15	32151-36	1	Ring-Retaining
16	302-5	1	Fitting-Grease
17	74-1810	2	Washer
18	137-1653	1	Idler Arm ASM
18:2	126-1963	2	Bushing-Pivot
19	95-8806	1	Spacer
20	32128-21	1	Nut-HF Lock
21	95-8802	1	Pulley-Idler
22	323-10	1	Screw-HH
23	95-8917	1	Spring-Torsion
24	70-2041	1	Trim - Edge
25	32128-54	1	Nut-HF
26	95-8933-0P	1	Plate - Pump Mount *b
27	42-9370	1	Screw-HH

● Not serviced separately

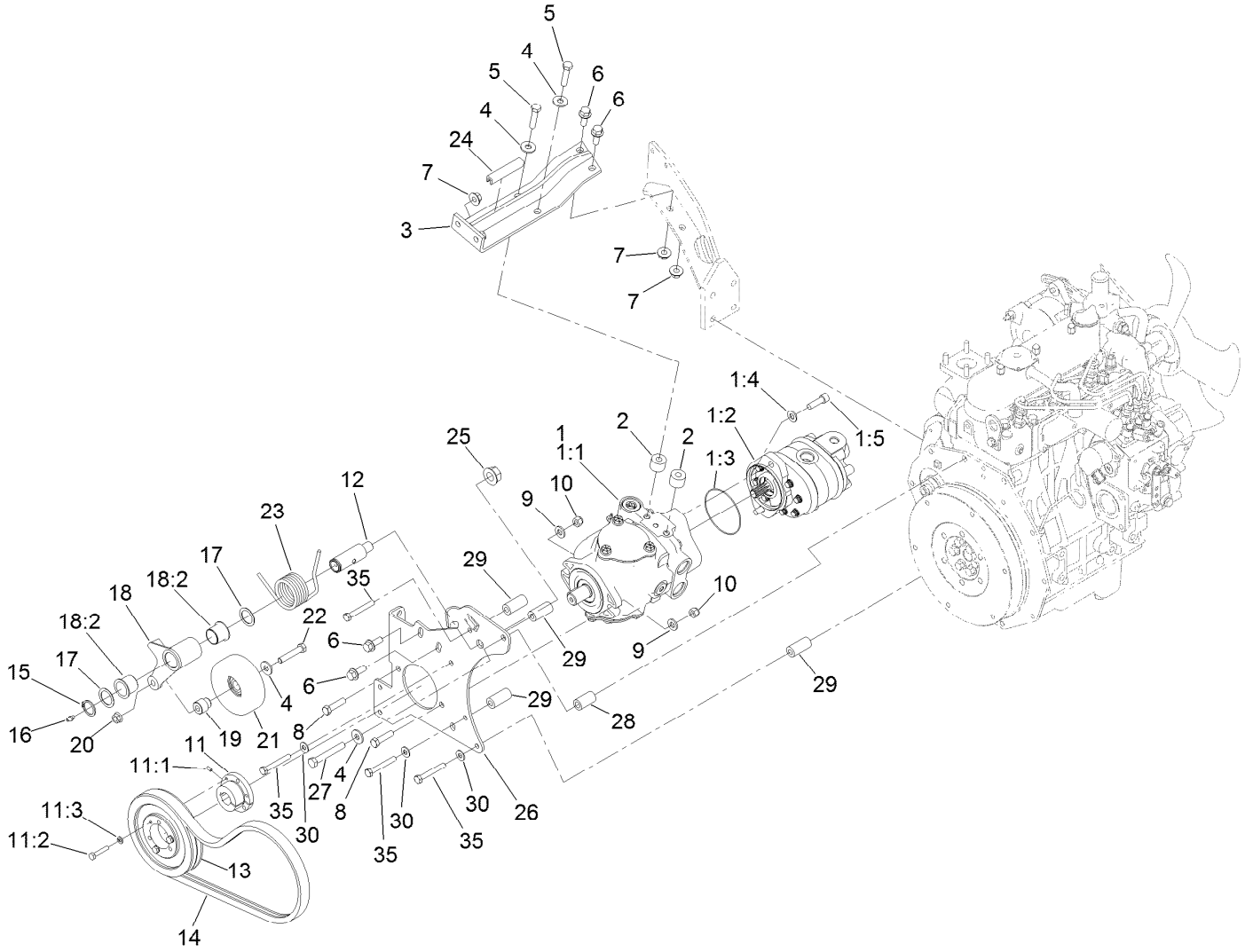

Tandem Hydraulic Pump Assembly (continued)

Ref.	Part Number	Qty.	Description
28	95-8736	1	Spacer
29	95-8941	4	Spacer-Mount, Pump
30	87-8640	3	Washer-Flat
35	33114-060	4	Screw-HH

● Not serviced separately

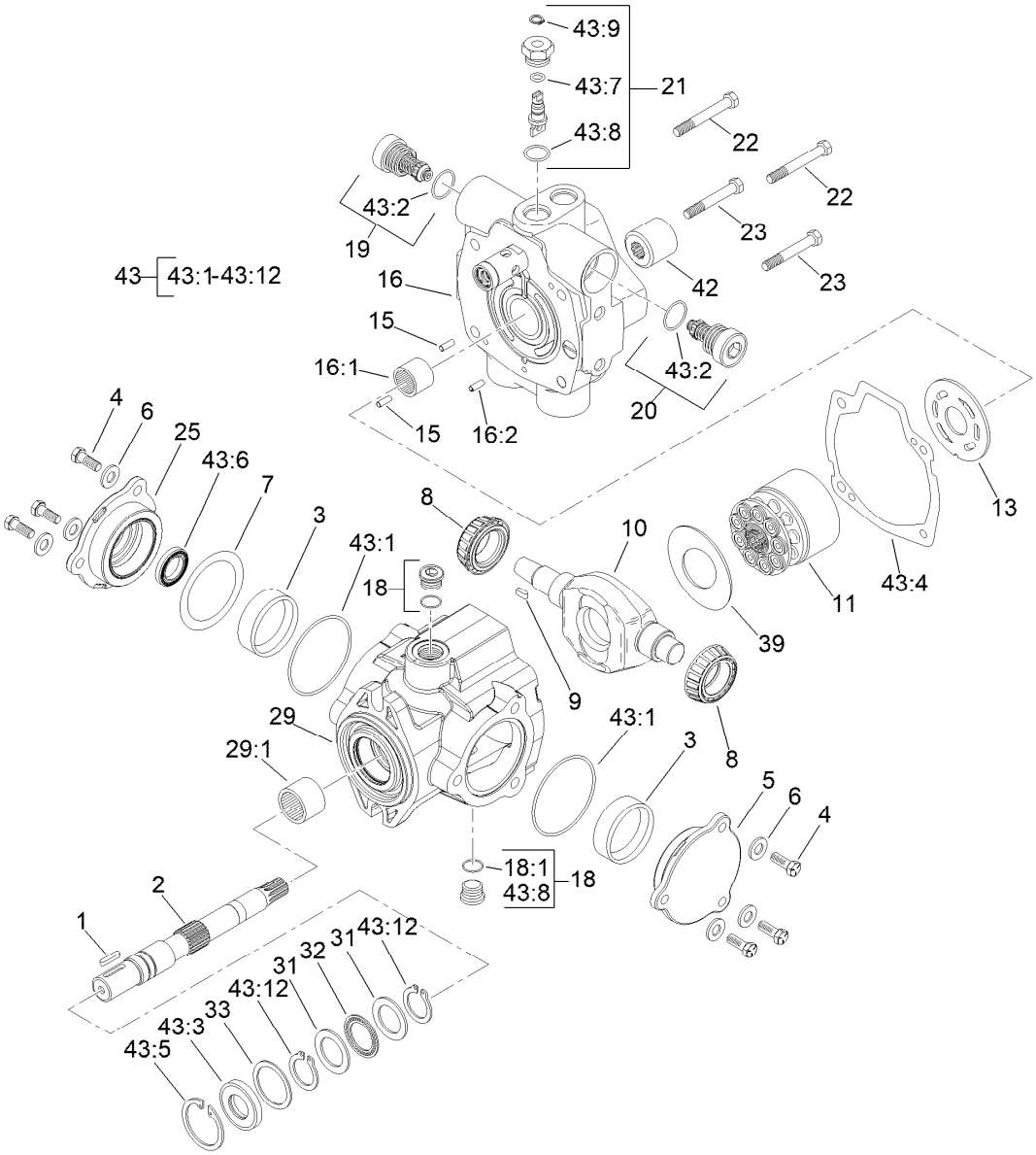

Hydraulic Pump Assembly No. 104-4890

Ref.	Part Number	Qty.	Description
1	94-3645	1	Key
2	94-6359	1	Shaft-Drive
3	104-4046	2	Bearing-Cup
4	98-4640	6	Screw-Cap
5	98-4644	1	Plate-Cover
6	105-9762	6	Washer
7	100-3182	2	Shim Kit
8	98-4639	2	Bearing-Cone
9	94-3646	1	Key
10	104-4888	1	Swashplate
11	76-6070	1	Rotating Kit
13	104-0429	1	Plate-Valve
15	76-6150	2	Pin-Dowel
16	105-3813	1	Endcover Sub ASM
16:1	94-6368	1	Bearing
16:2		1	Pin-Roll ■
18	74-9280	2	Plug ASM
18:1		1	O-Ring ■

Ref.	Part Number	Qty.	Description
19	104-4889	1	Relief Valve ASM
20	105-3812	1	Valve-Check
21	105-3811	1	Valve-Bypass
22	76-6170	2	Capscrew
23	76-6160	2	Capscrew
25	98-4645	1	Plate-Cover
29	100-3176	1	Housing ASM
29:1	94-6363	1	Bearing
31	252-71	2	Washer-Thrust
32	252-66	1	Bearing-Thrust
33	33-3720	1	Washer
39	98-4635	1	Insert-Plate, Cam
42	74-9040	1	Coupler
43	120-5754	1	Seal Kit
43:1		2	O-Ring ■
43:2		2	O-Ring ■
43:3		1	Seal-Shaft ■
43:4		1	Gasket ■

● Not illustrated

■ Not serviced separately

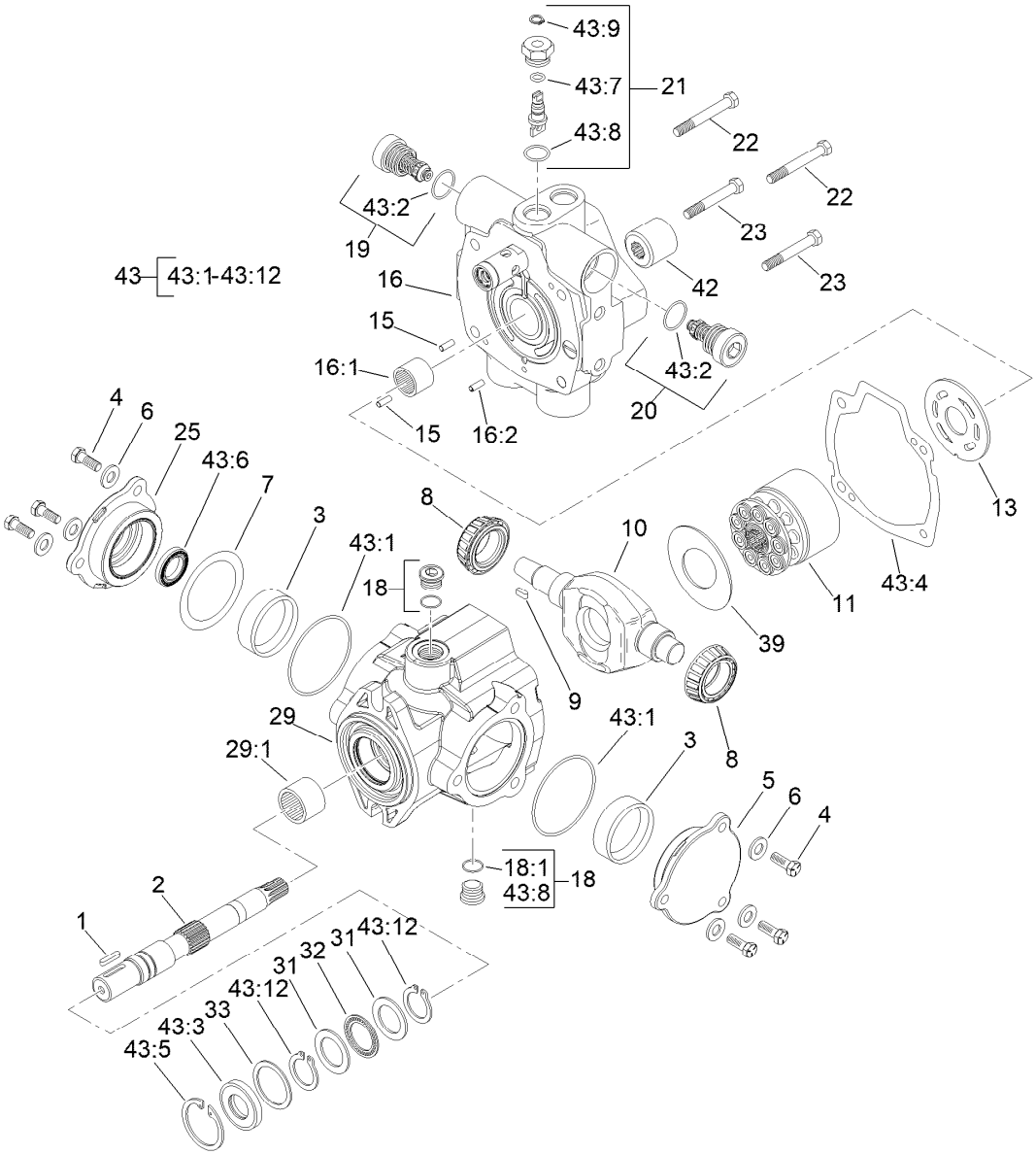

Hydraulic Pump Assembly No. 104-4890 (continued)

Ref.	Part Number	Qty.	Description
43:5		1	Ring-Retaining ■
43:6		1	Seal-Shaft ■
43:7		1	O-Ring ■
43:8		5	O-Ring ■
43:9		1	Ring-Retaining ■

Ref.	Part Number	Qty.	Description
43:10		1	O-Ring ● ■
43:11		1	O Ring-Molded ● ■
43:12		2	Ring-Retaining ■
43:13		1	O-Ring ■ ●

● Not illustrated

■ Not serviced separately

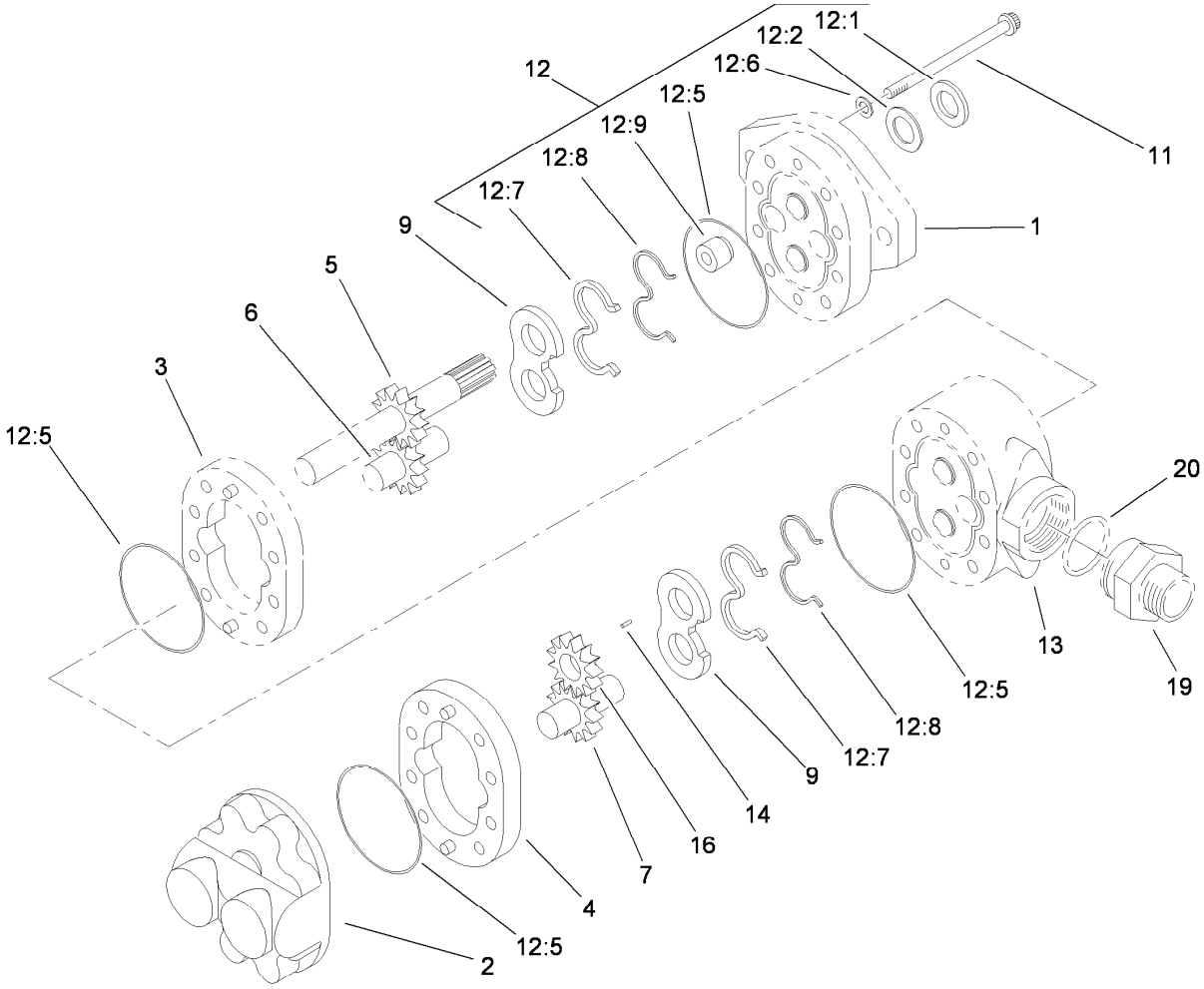

Gear Pump Assembly No. 95-8601

Ref.	Part Number	Qty.	Description
1		1	Plate-Front ■
2		1	Plate-Back ■
3		1	Body ■
4	95-4364	1	Body
5		1	Gear-Drive ■
6		1	Gear-Idler ■
7	95-4366	1	Gear-Idler
9	95-4368	2	Plate-Wear
11	94-8158	8	Screw-Cap
12	94-8161	1	Seal Repair Kit ●
12		4	O-Ring ■
12:1	49-2640	1	Seal-Shaft
12:2	60-5890	1	Washer
12:5		4	O-Ring ■
12:6	120-7576	4	Washer-Sealing
12:7	95-4369	2	Seal-Pressure
12:8	95-4368	2	Plate-Wear
12:9	94-3011	1	Plug
13		1	Plate-Adapter ■
14		1	Key ■
16	95-4373	1	Gear-Fit, Slip
19	49-2640	1	Seal-Shaft
20	60-5890	1	Washer

● Not illustrated

■ Not serviced separately

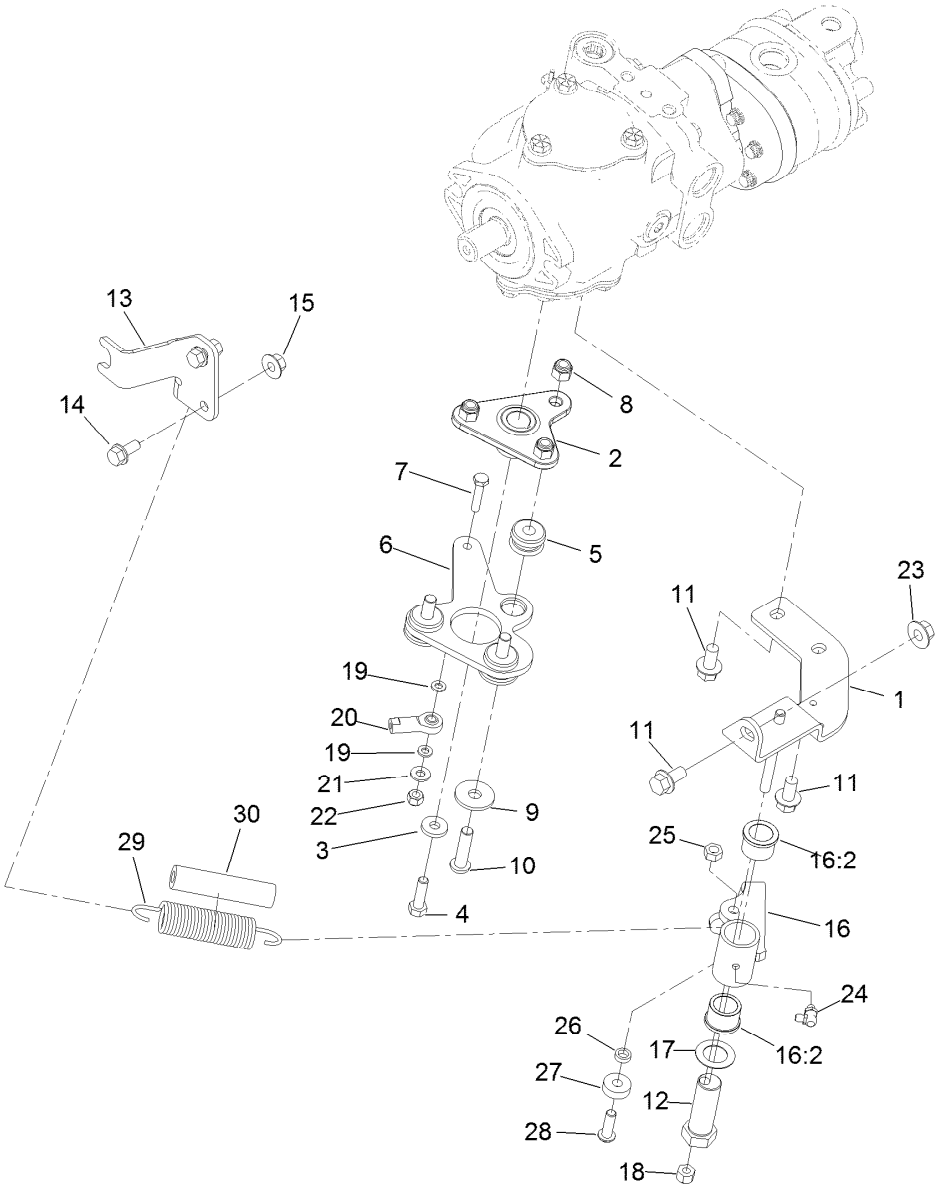

Tandem Pump Mount Assembly

Ref.	Part Number	Qty.	Description
1	95-8960-0P	1	Bracket-Neutral
2	120-5566	1	Hub
3	88-7200	1	Washer-Flat
4	3210-6	1	Screw-HH
5	63-9750	3	Mount
6	99-3594-0P	1	Lever-Pump
7	321-8	1	Screw-HH
8	3296-39	3	Nut-Lock, NI
9	2844	3	Washer
10	95-3857	3	Screw-HSBH
11	3234-1	3	Screw-HHF
12	76-8640	1	Stud-Traction
13	104-0464-03	1	Bracket-Support, Cable
14	3234-5	2	Screw-HHF
15	32128-44	2	Nut
16	104-0422	1	Neutral Arm ASM

Ref.	Part Number	Qty.	Description
16:2	256-113	2	Bushing-Flange
17	3-6498	1	Washer-Thrust
18	3296-29	1	Nut-Lock, NI
19	33093-00	2	Washer-Flat
20	2411-41	1	Rod End-Ball Joint
21	3256-22	1	Washer-Flat
22	3296-42	1	Nut-Lock, NI
23	32128-43	1	Nut-Flange
24	302-60	1	Fitting-Grease
25	32153-3	1	Nut-Hex, Side Deform
26	100-4817	1	Spacer
27	251-259	1	Bearing-Ball
28	3274-104	1	Screw-HSBH
29	94-1369	1	Spring-Extension
30	99-3556	1	Hose

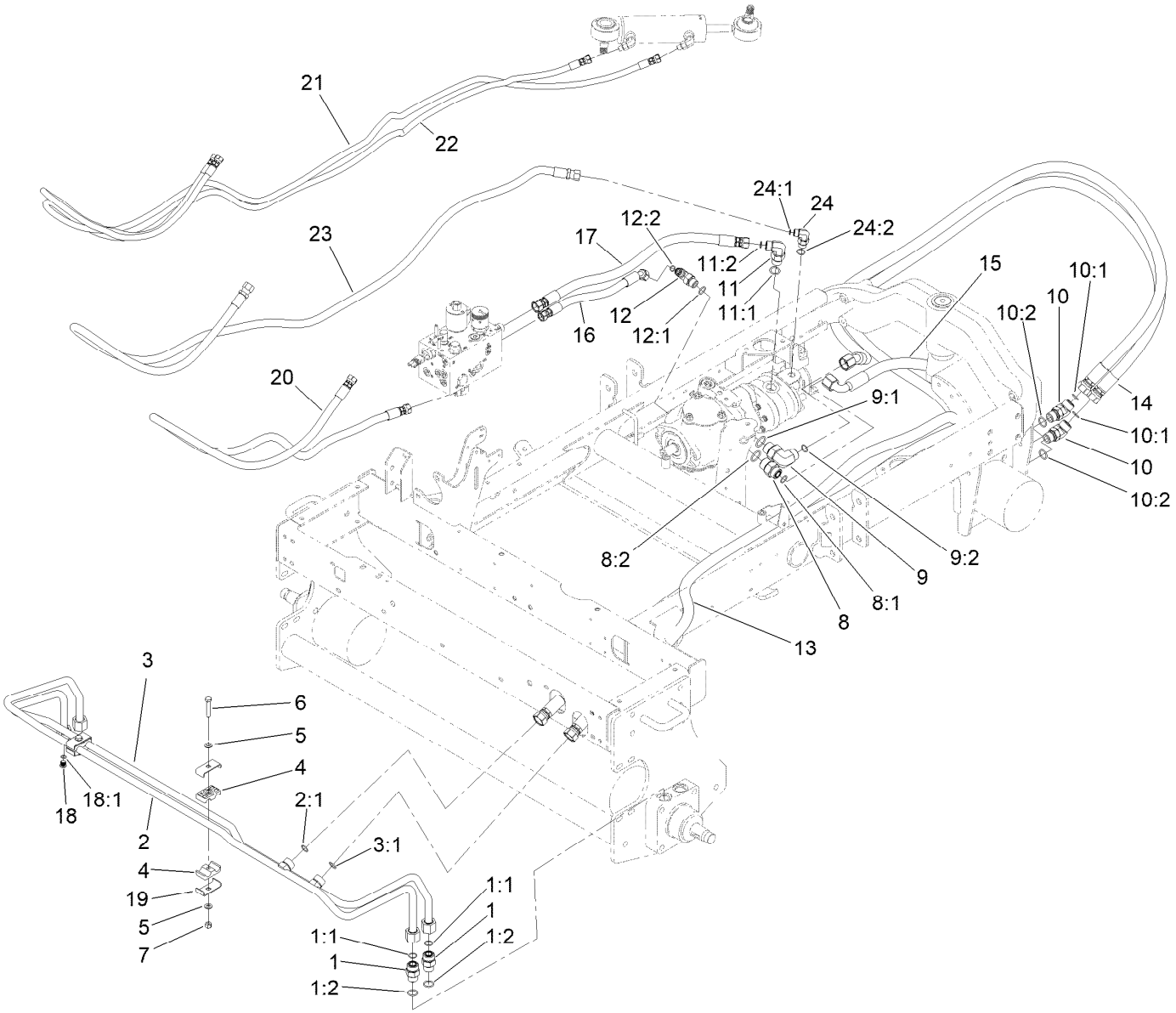

Traction and Steering Circuit Assembly

Ref.	Part Number	Qty.	Description
1	340-7	4	Fitting-Straight
1:1	237-65	1	O-Ring
1:2	237-80	1	O-Ring
2	95-8783	1	Tube ASM
2:1	237-65	1	O-Ring
3	95-8784	1	Tube ASM
3:1	237-65	1	O-Ring
4	56-7971	4	Clamp-Tube
5	3256-23	4	Washer-Plain
6	322-9	2	Screw-HH
7	3296-29	2	Nut-Lock, NI
8	340-8	1	Fitting-Straight
8:1	237-65	1	O-Ring
8:2	237-81	1	O-Ring
9	340-139	1	Fitting-Elbow 90
9:1	237-81	1	O-Ring
9:2	237-65	1	O-Ring
10	340-14	2	Fitting-HYD, 45 DEG

Ref.	Part Number	Qty.	Description
10:1	237-65	1	O-Ring
10:2	237-80	1	O-Ring
11	340-105	1	Fitting-Elbow, 90 DEG
11:1	237-80	1	O-Ring
11:2	237-30	1	O-Ring
12	340-18	1	Fitting-HYD, 90 DEG
12:1	237-79	1	O-Ring
12:2	237-22	1	O-Ring
13	105-1221	1	Hose ASM
14	105-1222	1	Hose ASM
15	105-1214	1	Hose-HYD
16	106-4197	1	Hose ASM
17	95-8829	1	Hose ASM
18	353-990	1	Plug ASM
18:1	237-78	1	O-Ring
19	119-1419	4	Plate-Clamp
20	95-8842	1	Hose-HYD
21	95-8845	1	Hose ASM

● Not illustrated

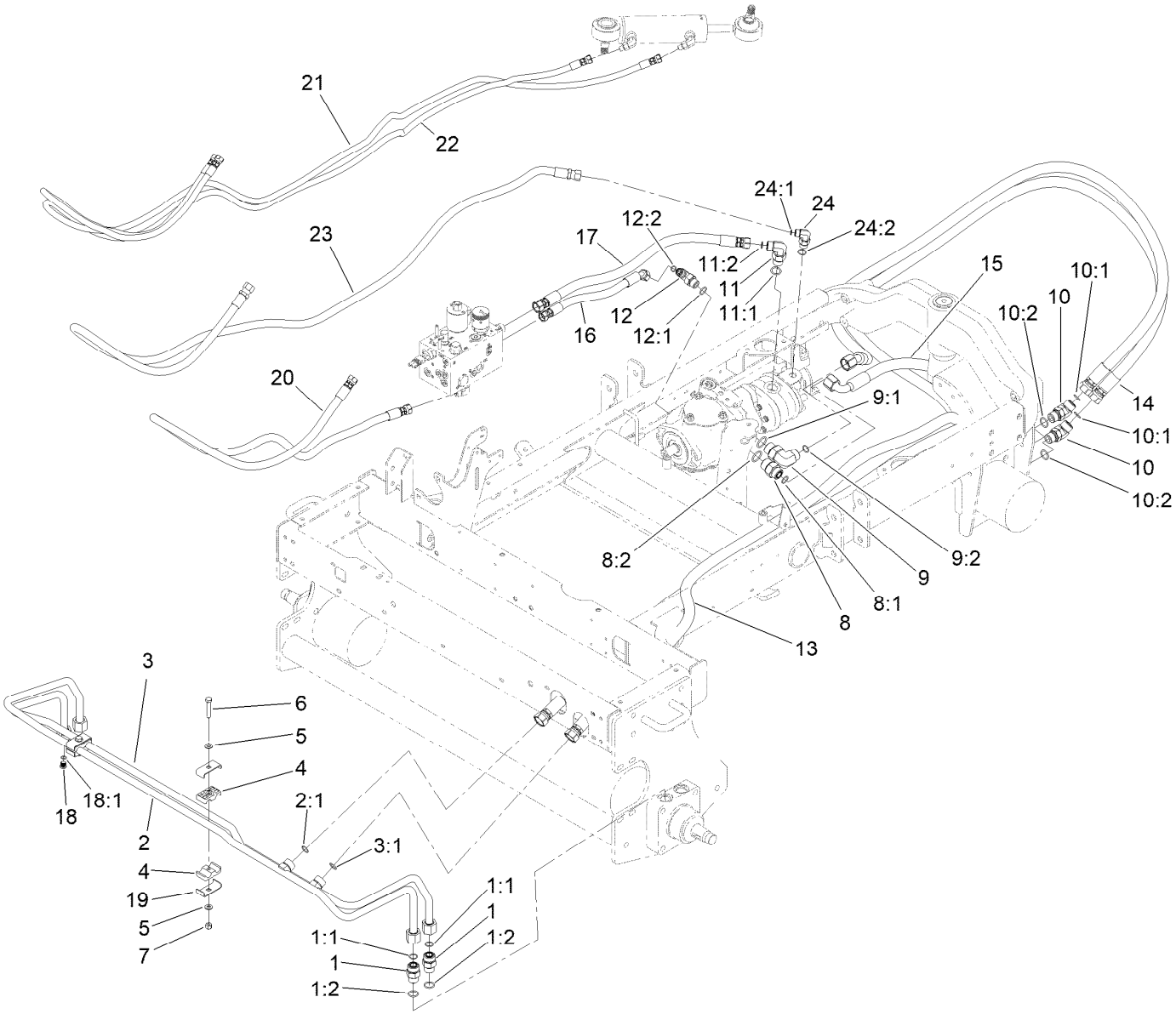

Traction and Steering Circuit Assembly (continued)

Ref.	Part Number	Qty.	Description
22	95-8844	1	Hose ASM
23	95-8846	1	Hose-HYD
24	340-77	1	Fitting-Elbow, 90 DEG

Ref.	Part Number	Qty.	Description
24:1	237-22	1	O-Ring
24:2	237-42	1	O-Ring
99	3290-378	2	Tie-Cable ●

● Not illustrated

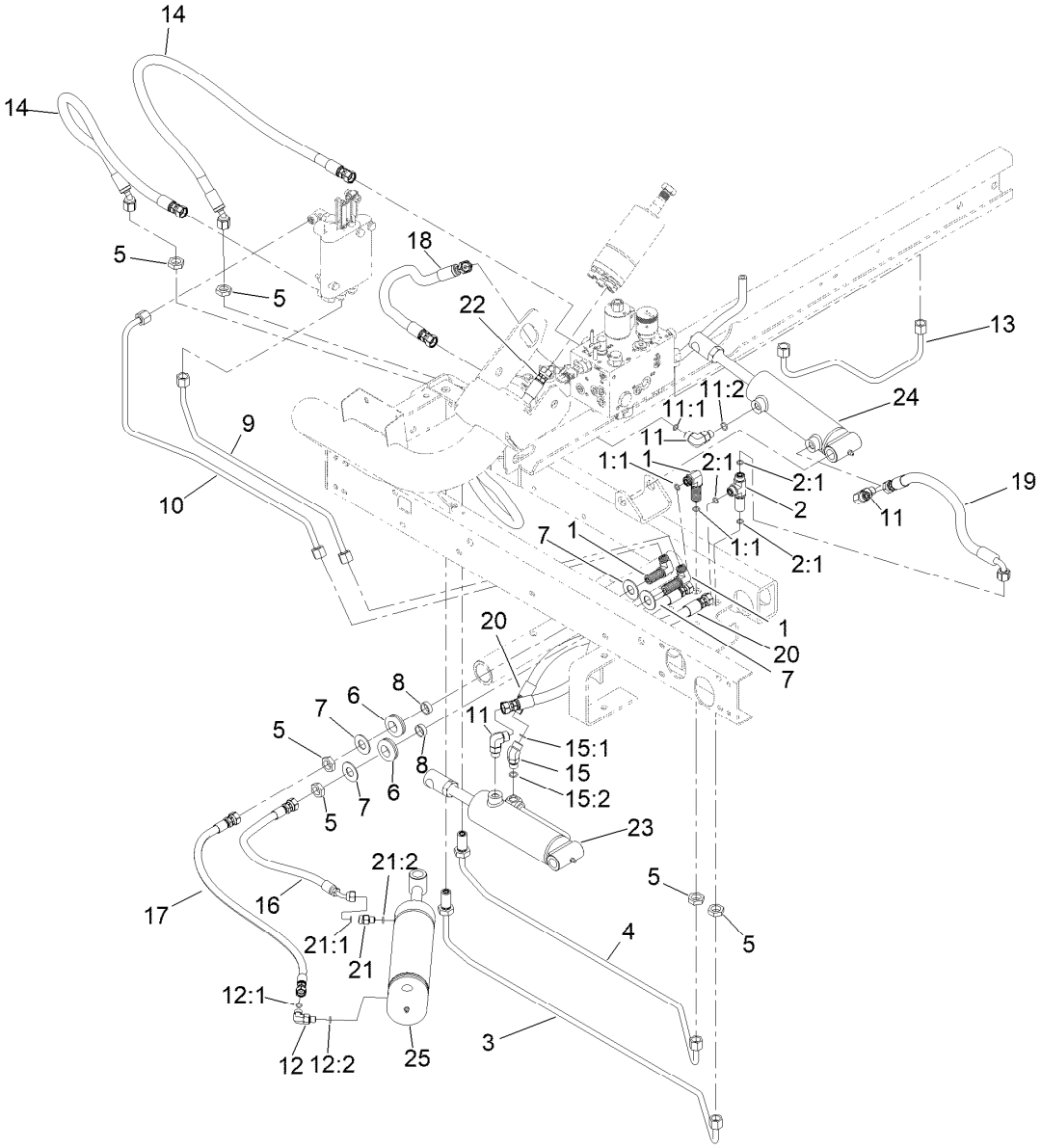

Lift Circuit Assembly

Ref.	Part Number	Qty.	Description
1	340-154	3	Union-Bulkhead
1:1	237-22	2	O-Ring
2	340-68	1	Fitting-Tee, Bulkhead
2:1	237-22	3	O-Ring
3	95-8984	1	Tube-HYD
4	95-8983	1	Tube-HYD
5	340-70	6	Nut-Lock
6	240-4	2	Grommet-Rubber
7	69-8940	4	Washer
8	69-8970	2	Spacer
9	95-8791	1	Tube-HYD
10	95-8790	1	Tube-HYD
11	340-77	3	Fitting-Elbow, 90 DEG
11:1	237-22	1	O-Ring
11:2	237-42	1	O-Ring
12	340-132	1	Fitting-Elbow, 90 DEG
12:1	237-78	1	O-Ring
12:2	237-21	1	O-Ring

Ref.	Part Number	Qty.	Description
13	95-8792	1	Tube ASM
14	95-8822	2	Hose-HYD
15	340-87	1	Fitting-Elbow, 45 DEG
15:1	237-22	1	O-Ring
15:2	237-42	1	O-Ring
16	95-8838	1	Hose-HYD
17	95-8839	1	Hose-HYD
18	95-8823	1	Hose ASM
19	104-2234	1	Hose-HYD
20	117-5147	2	Hose-HYD
21	85-9720	1	Fitting-STR, Orifice
21:1	237-78	1	O-Ring
21:2	237-21	1	O-Ring
22	95-8843	1	Hose-HYD
23	117-5109	1	HYD Cylinder ASM
24	112-9916	1	HYD Cylinder ASM
25	121-3654	1	Cylinder-HYD
99	3290-378	1	Tie-Cable ●

● Not illustrated

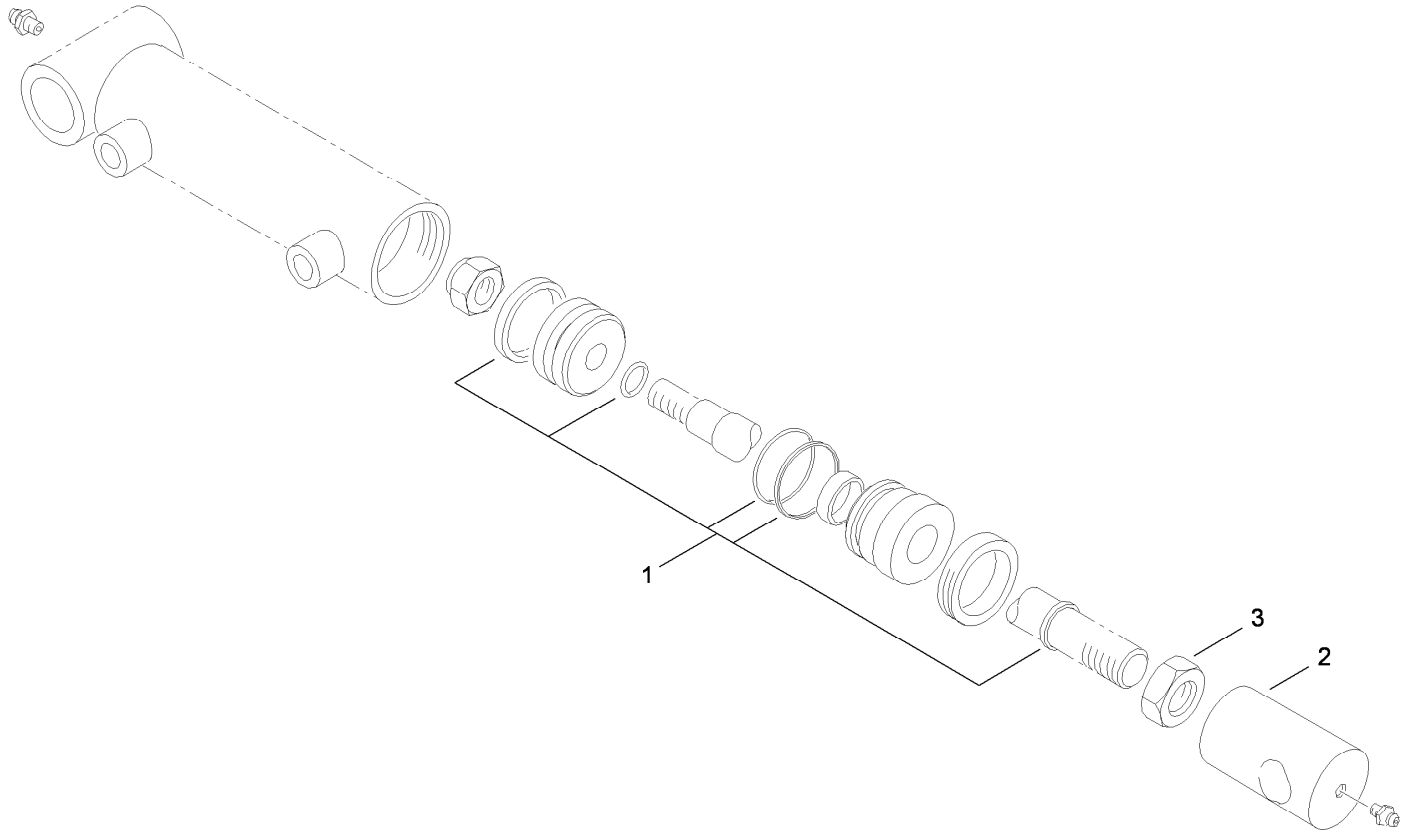

Hydraulic Cylinder Assembly No. 112-9916

Ref.	*Part Number*	*Qty.*	*Description*
1	115-3410	1	Seal Kit
2	108-9035	1	Clevis
3	3220-7	1	Nut-Jam

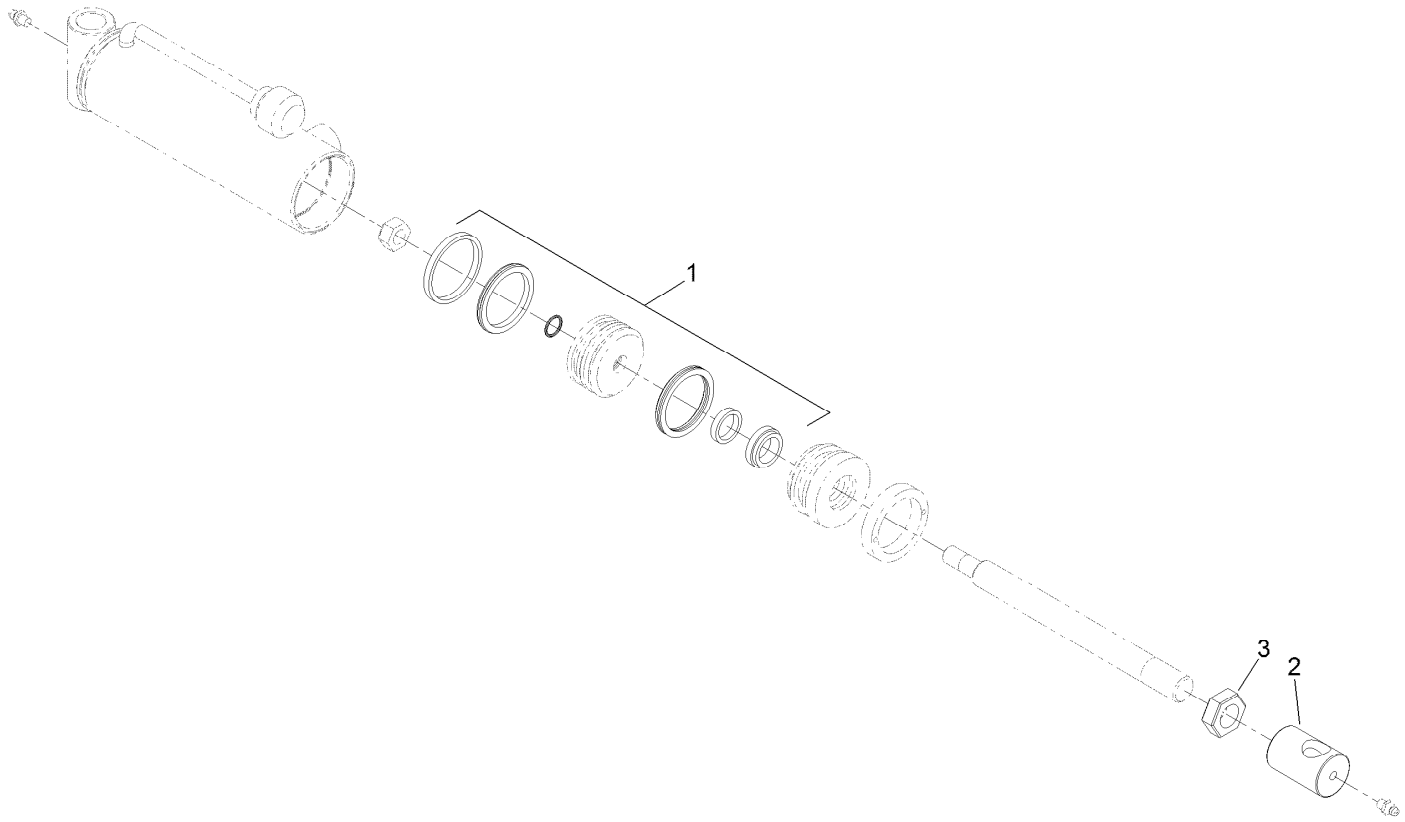

Hydraulic Cylinder Assembly No. 117-5109

Ref.	*Part Number*	*Qty.*	*Description*
1	115-3410	1	Seal Kit
2	108-9035	1	Clevis
3	3220-7	1	Nut-Jam

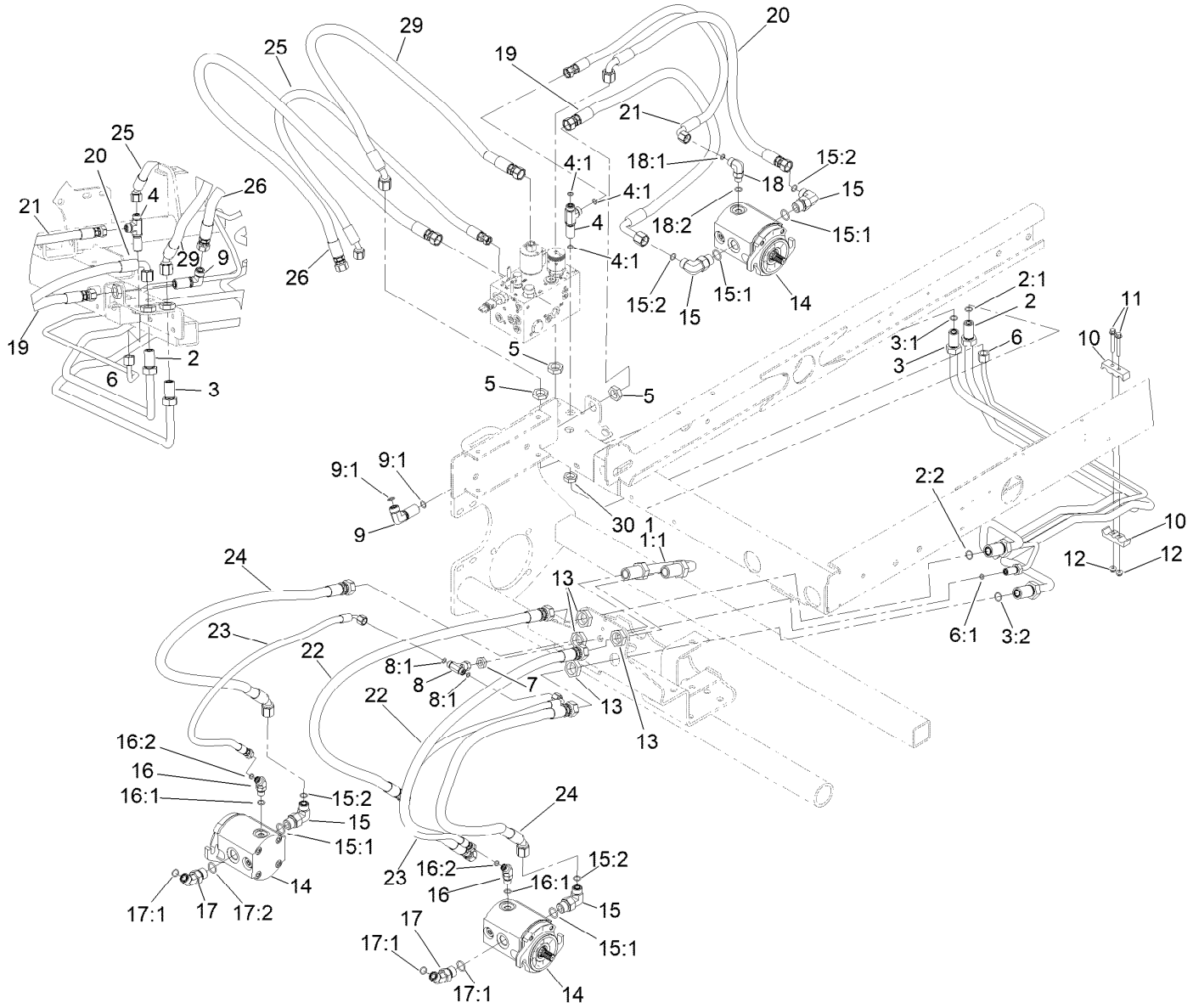

Hydraulic Mow Circuit Assembly

Ref.	Part Number	Qty.	Description
1	99-3640	1	Tube ASM
1:1	237-65	2	O-Ring
2	95-8980	1	Tube ASM
2:1	237-30	1	O-Ring
2:2	237-65	1	O-Ring
3	95-8981	1	Tube ASM
3:1	237-30	1	O-Ring
3:2	237-65	1	O-Ring
4	340-68	1	Fitting-Tee, Bulkhead
4:1	237-22	3	O-Ring
5	340-127	3	Nut-Bulkhead
6	95-8982	1	Tube ASM
6:1	237-21	1	O-Ring
7	340-78	1	Nut-Lock
8	99-3477	1	Fitting-Tee
8:1	237-21	2	O-Ring ●
9	93-9151	1	Fitting-HYD
9:1	237-30	2	O-Ring

Ref.	Part Number	Qty.	Description
10	93-2509	2	Clamp-Tube
11	3234-34	2	Screw-HHF
12	104-7201	2	Nut-HF, NI
13	340-74	4	Nut-Lock, Bulkhead
14	115-8250	3	Gear Motor ASM
15	340-105	4	Fitting-Elbow, 90 DEG
15:1	237-80	1	O-Ring
15:2	237-30	1	O-Ring
16	340-137	2	Fitting
16:1	237-21	1	O-Ring
16:2	237-42	1	O-Ring
17	340-89	2	Fitting-HYD, 45 DEG
17:1	237-30	1	O-Ring
17:2	237-80	1	O-Ring
18	340-77	1	Fitting-Elbow, 90 DEG
18:1	237-22	1	O-Ring
18:2	237-42	1	O-Ring
19	117-5145	1	Hose-HYD

● Not illustrated

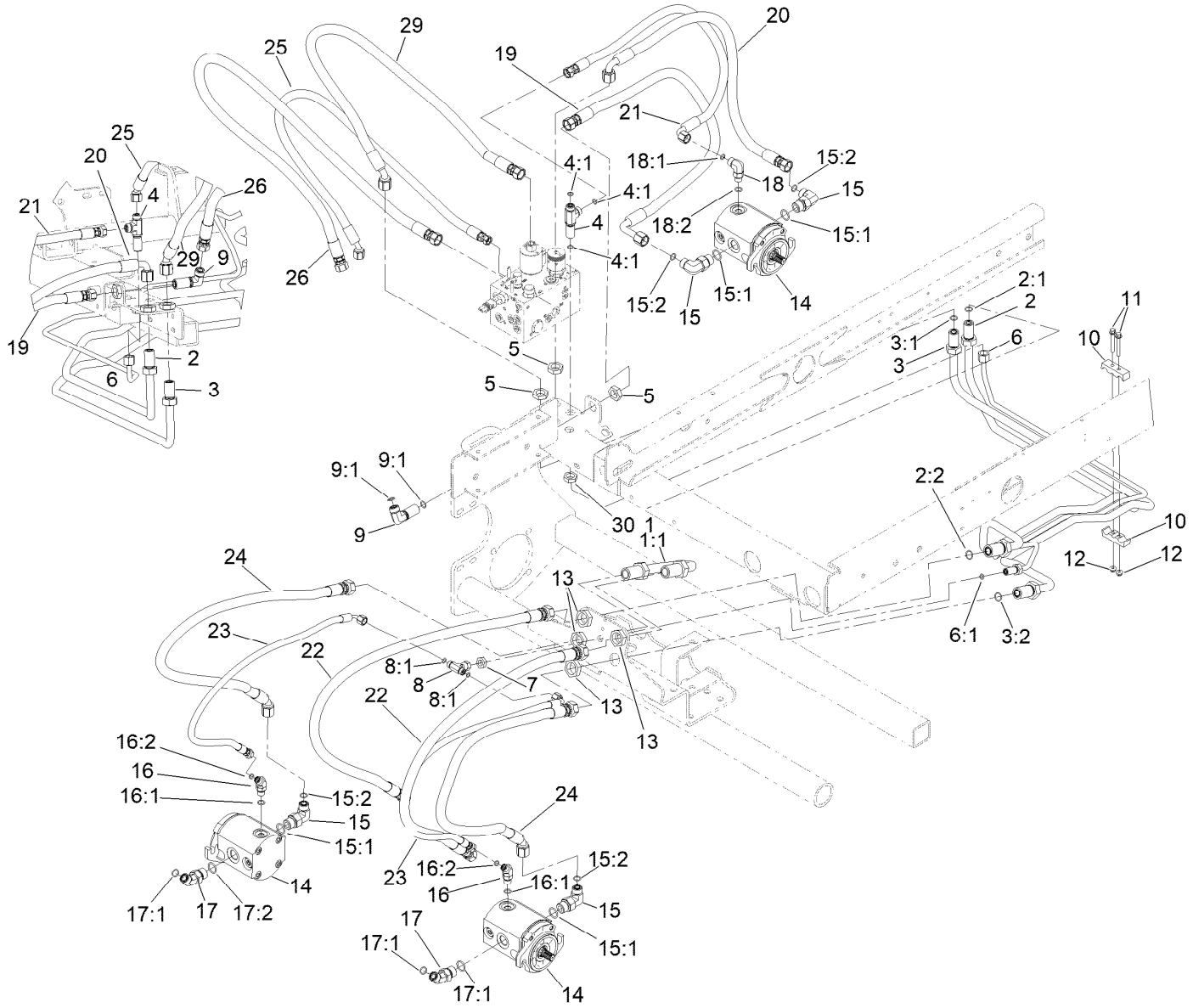

Hydraulic Mow Circuit Assembly (continued)

Ref.	Part Number	Qty.	Description
20	117-5146	1	Hose-HYD
21	114-5500	1	Hose-HYD
22	117-5142	2	Hose-HYD
23	117-5144	2	Hose-HYD
24	117-5143	2	Hose-HYD

Ref.	Part Number	Qty.	Description
25	115-3411	1	Hose-HYD
26	95-8824	1	Hose ASM
29	95-8820	1	Hose ASM
30	340-70	1	Nut-Lock

● Not illustrated

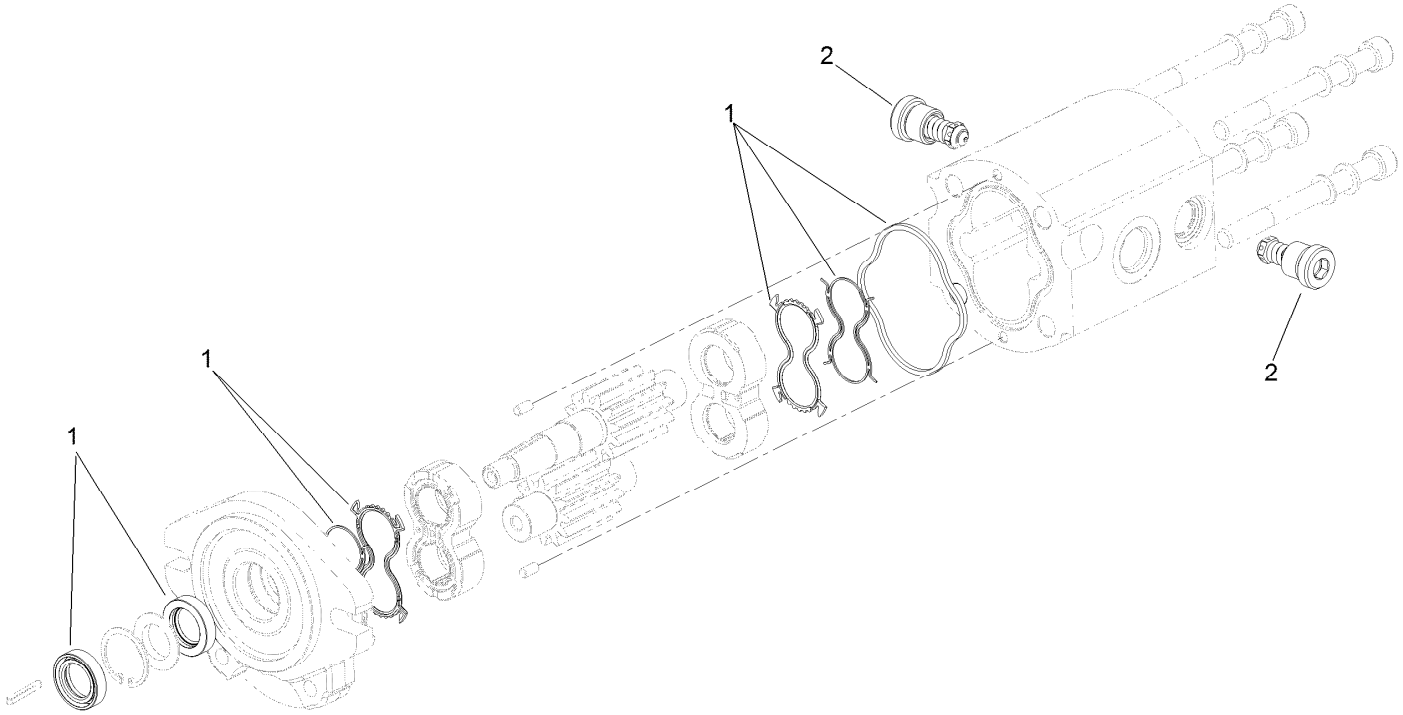

Gear Motor Assembly No. 115-8250

Ref.	*Part Number*	*Qty.*	*Description*
1	125-1682	1	Motor Seal Kit
2	117-5107	2	Valve-Check

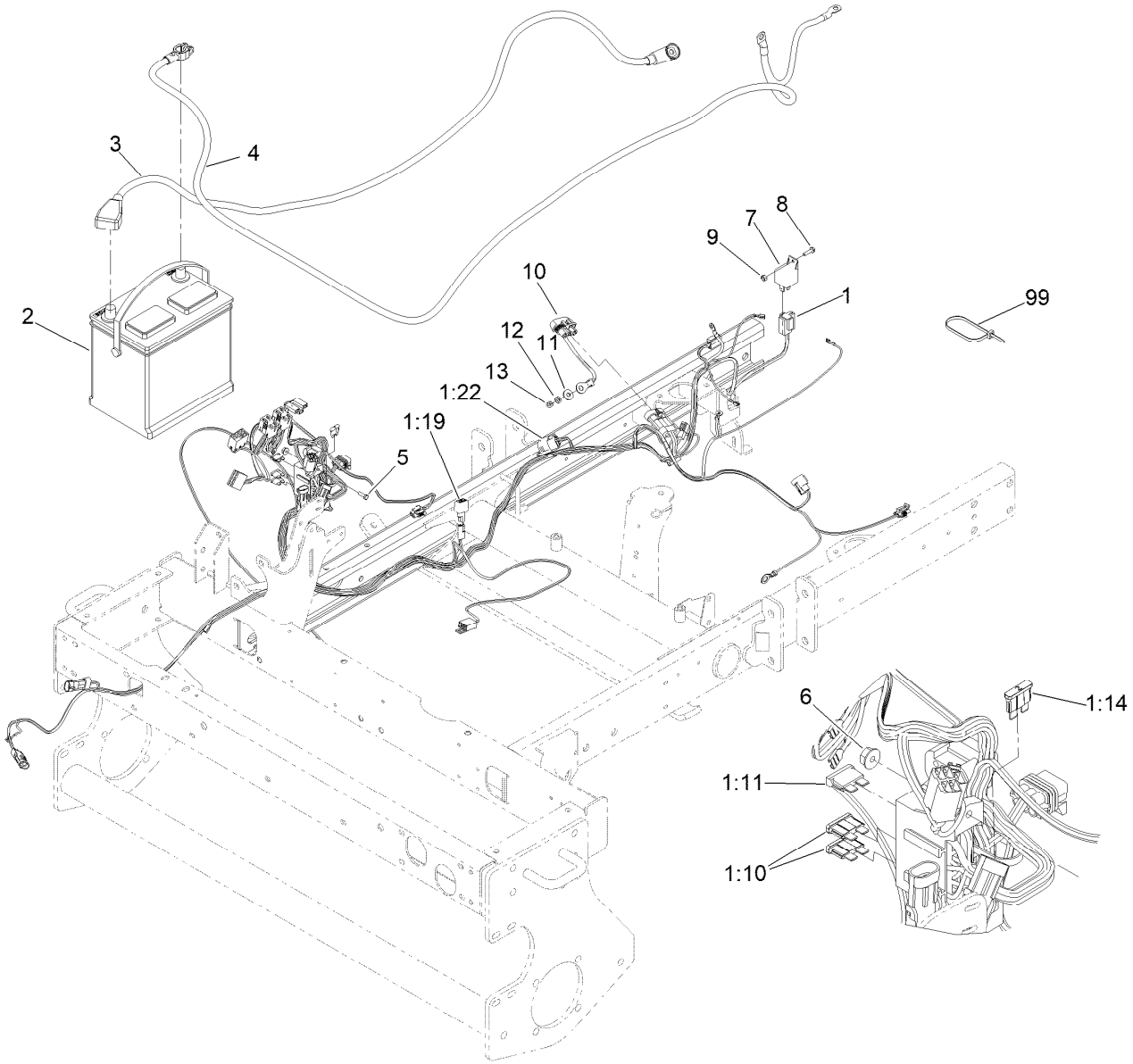

Wire Harness and Battery Assembly

Ref.	Part Number	Qty.	Description
1	122-1523	1	Harness-Wire
1:10	218-578	2	Fuse-Blade, 10 Amp
1:11	109355	1	Fuse-Blade, 15 Amp
1:14	94-6710	1	Fuse-2 Amp
1:19	100-4918	1	Diode
1:22	32180-156	1	Cap-Plug, 6 Way ●
2	104-0496	1	Battery (Group 55, Wet)
3	95-8853	1	Cable-Battery, Positive
4	95-8854	1	Cable-Battery, Negative
5	3290-134	2	Screw

Ref.	Part Number	Qty.	Description
6	3290-148	2	Nut-HF
7	99-7435	1	Relay
8	32105-13	1	Screw-HWH
9	3296-2	1	Nut-Lock, NI
10	99-3441	1	Harness-Wire, Fusible Link
11	3256-78	1	Washer-Flat
12	43-5930	1	Washer-Lock, Spring
13	48-7890	1	Nut-Hex
99	3290-378	8	Tie-Cable
99	3290-379	4	Tie-Cable

● Not illustrated

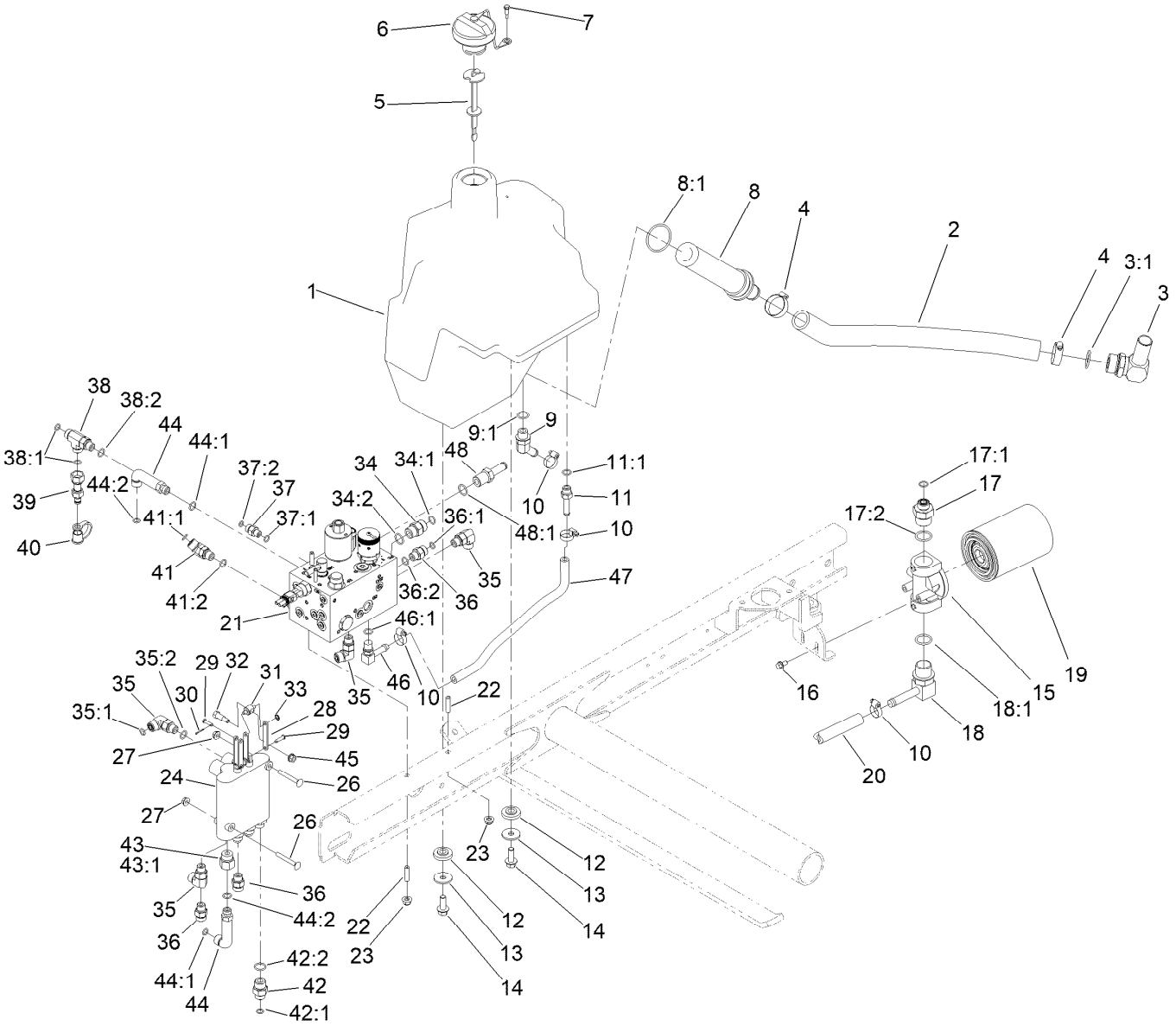

Hydraulic Tank and Valve Assembly

Ref.	Part Number	Qty.	Description
1	104-4840	1	Tank-HYD
2	104-4845	1	Hose-Suction
3	56-9530	1	Fitting-HYD, 90 DEG
3:1	237-117	1	O-Ring
4	2412-34	2	Clamp-Hose
5	119-6968	1	Dipstick-Oil
6	93-7160	1	Cap-Oil, HYD
7	57-5420	1	Screw-Shoulder
8	104-7546	1	Tank Strainer ASM
8:1	340-136	1	O-Ring
9	354-126	1	Fitting-Elbow, 45
9:1	237-79	1	O-Ring
10	2412-36	4	Clamp-Hose
11	353-979	1	Fitting-STR
11:1	237-42	1	O-Ring
12	240-11	4	Bushing-Flange
13	63-8410	4	Washer
14	3234-11	4	Screw-HHF
15	92-5821	1	Head-Filter
16	3234-13	2	Screw-HHF
17	100-4240	1	Fitting-STR

Ref.	Part Number	Qty.	Description
17:1	237-30	1	O-Ring
17:2	237-81	1	O-Ring
18	95-8814	1	Fitting-90
18:1	237-81	1	O-Ring
19	86-3010	1	Filter-Oil
20	99-3501	1	Hose
21	108-9037	1	Manifold ASM
22	104-0430	2	Stud
23	104-8300	2	Nut-HF, NI
24	95-8581	1	2-Spool Control Valve ASM
26	3230-33	2	Screw-CARR
27	32128-33	2	Nut-HF
28	95-8634	4	Link
29	283-16	3	Pin-Clevis
30	3272-1	3	Pin-Cotter
31	95-8638	1	Trunnion-Valve, Actuator
32	92-8916	1	Bolt-Shoulder
33	32151-106	2	Ring-Retaining
34	340-4	3	Fitting-Straight
34:1	237-30	1	O-Ring
34:2	237-79	1	O-Ring

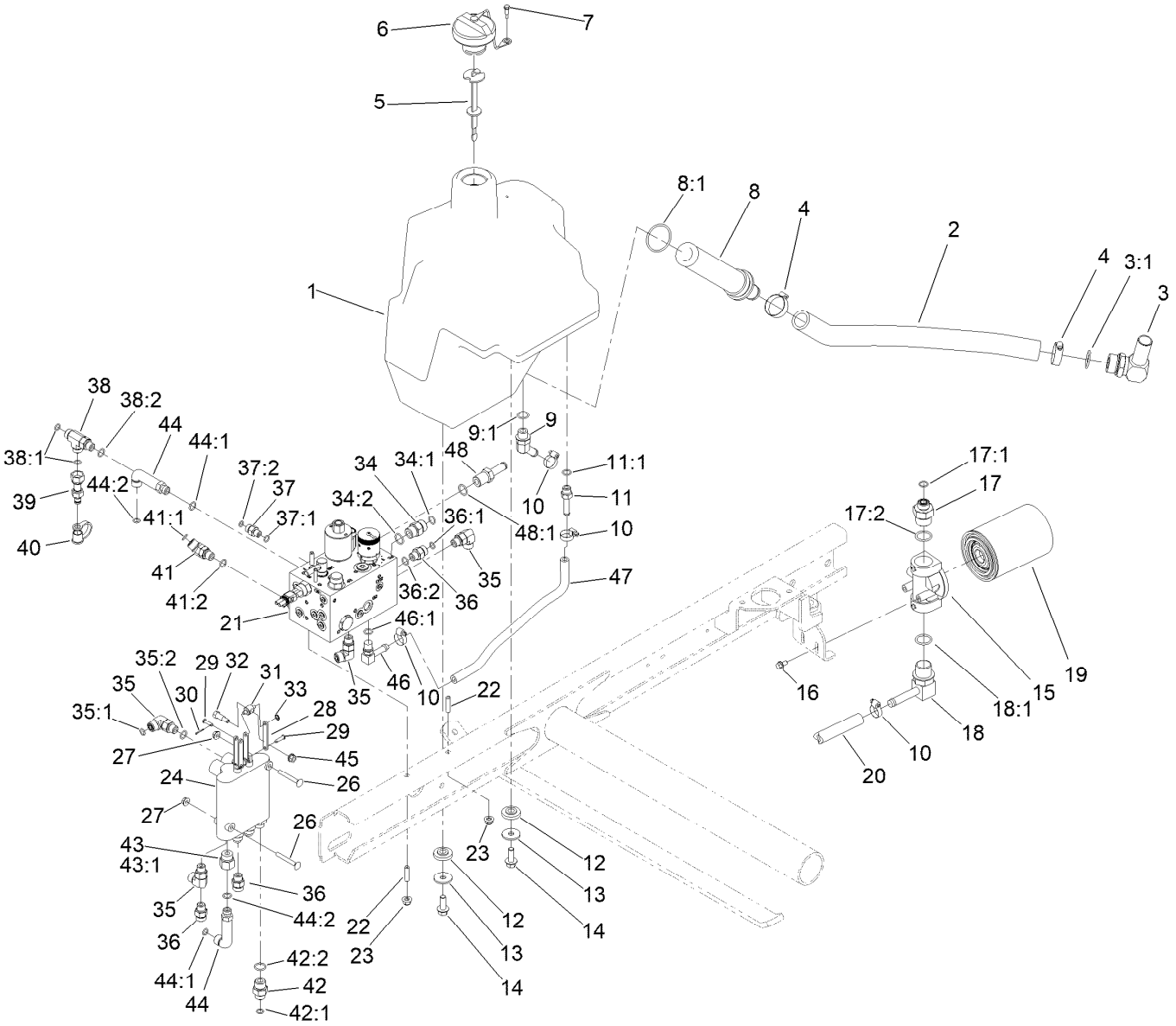

Hydraulic Tank and Valve Assembly (continued)

Ref.	Part Number	Qty.	Description
35	340-77	4	Fitting-Elbow, 90 DEG
35:1	237-22	1	O-Ring
35:2	237-42	1	O-Ring
36	340-2	2	Fitting-Straight
36:1	237-22	1	O-Ring
36:2	237-42	1	O-Ring
37	340-92	1	Fitting-Straight
37:1	237-78	1	O-Ring
37:2	237-21	1	O-Ring
38	340-86	1	Fitting-Tee
38:1	237-22	2	O-Ring
38:2	237-42	1	O-Ring
39	86-5480	1	Nipple-Test
40	354-79	1	Cap-Dust
41	340-87	1	Fitting-Elbow, 45 DEG
41:1	237-22	1	O-Ring

Ref.	Part Number	Qty.	Description
41:2	237-42	1	O-Ring
42	340-3	1	Fitting-Straight
42:1	237-22	1	O-Ring
42:2	237-79	1	O-Ring
43	353-397	1	Reducer-Adapter
43:1	237-79	1	O-Ring
44	69-4320	1	Fitting-HYD, 90 DEG
44:1	237-22	1	O-Ring
44:2	237-42	1	O-Ring
45	32128-32	1	Nut-HHF
46	100-4887	1	Fitting-Elbow, 90
46:1	237-42	1	O-Ring
47	80-7342	1	Hose-HYD
48	354-121	1	Fitting-STR
48:1	237-79	1	O-Ring

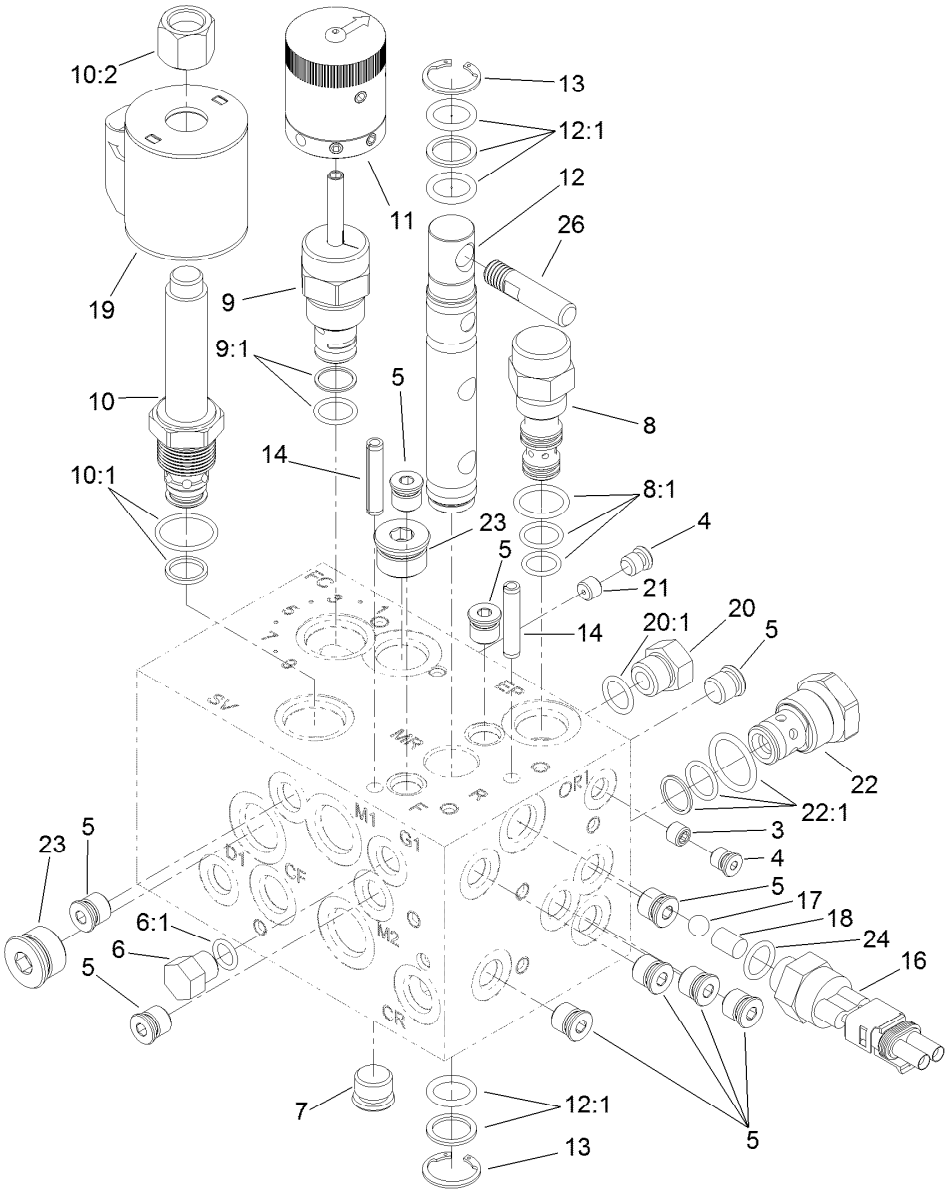

Hydraulic Manifold Assembly No. 108-9037

Ref.	Part Number	Qty.	Description
3	110-8771	1	Orifice-.020
4	106-1024	2	Plug-Leak, Zero
5	106-1025	10	Plug-HYD
6	353-512	1	Plug
6:1	237-78	1	O-Ring
7	106-1026	1	Plug-HYD
8	110-8770	1	Logic Element
8:1	110-8773	1	Seal Kit
9	110-8769	1	Valve-Control, Manual Flow
9:1	110-2633	1	Seal Kit
10	110-8768	1	Valve-Relief, Solenoid (3000 PSI)
10:1	110-6316	1	Seal Kit
10:2	130-8180	1	Nut-Coil (9/16-24 Unef-2B)
11	110-8767	1	Rotary Handle ASM
12	117-0108	1	Spool-Rotary

Ref.	Part Number	Qty.	Description
12:1	117-0109	1	Seal Kit
13	112-6532	2	Ring-Retaining
14	112-6531	2	Pin-Spring
16	72-4310	1	Switch-Ball
17	110-8762	1	Ball-Chrome
18	110-8761	1	Pin-Dowel
19	110-6344	1	Coil-12V, DC
20	353-508	1	Plug-HH
20:1	237-42	1	O-Ring
21	110-8760	1	Orifice-.073
22	110-8759	1	Valve-Relief
22:1	110-8772	1	Seal Kit ●
23	106-1027	2	Plug
24	110-8757	1	O-Ring
26	110-8758	1	Handle-Spool

● Not illustrated

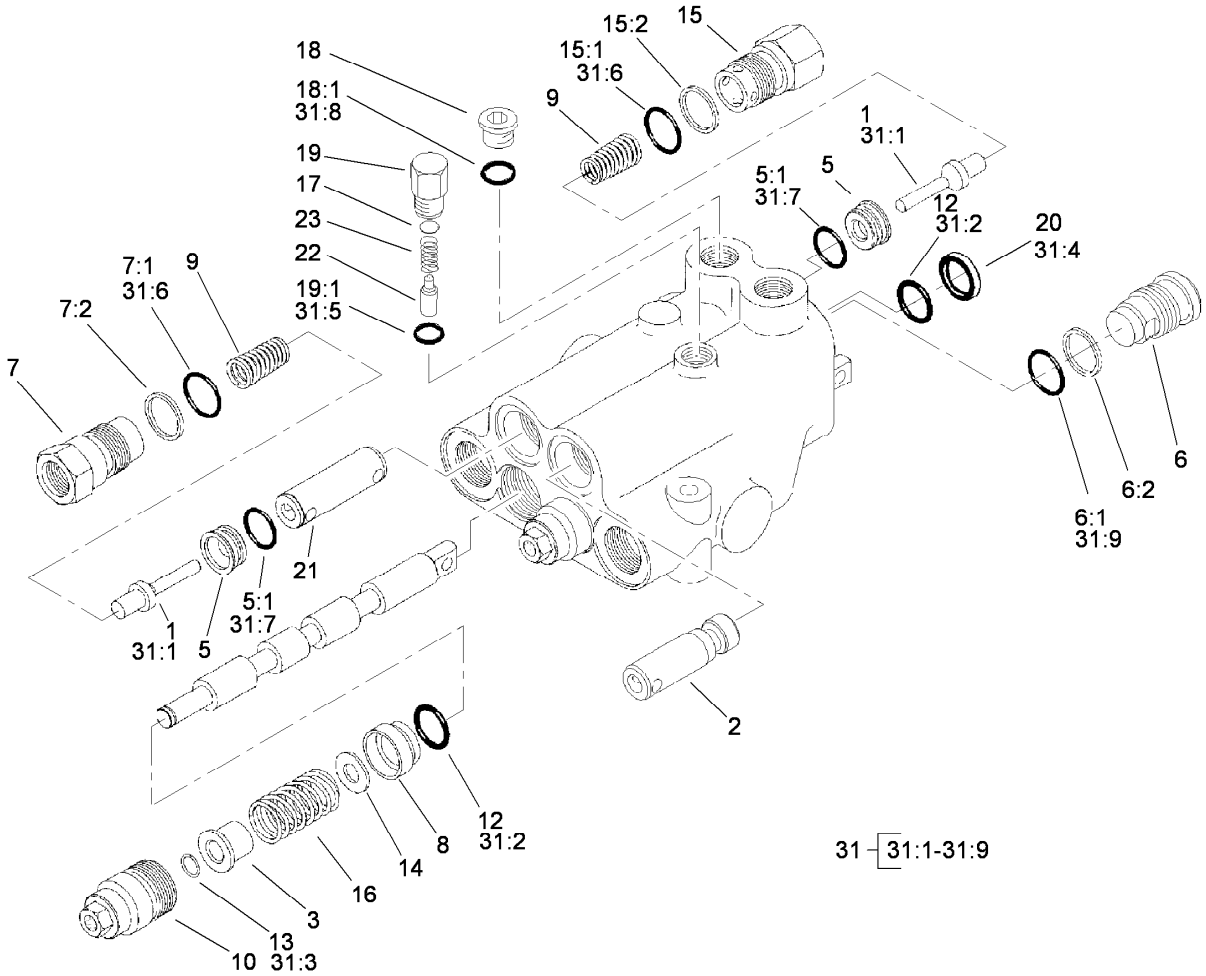

Valve Assembly No. 95-8581

Ref.	Part Number	Qty.	Description
1	58-6290	3	Poppet
2	69-1840	1	Plunger
3	58-6310	2	Spacer
5	58-6330	3	Seat
5:1	58-6340	1	O-Ring
6	58-6350	1	Plug
6:1	60-5720	1	O-Ring
6:2	58-6370	1	Washer
7	69-1800	2	Plug ASM
7:1	60-5720	1	O-Ring
7:2	58-6370	1	Washer
8	58-6400	2	Bushing
9	69-1810	3	Spring
10	58-6420	2	Cap
12	58-6450	4	O-Ring
13	58-6460	2	Ring-Retaining
14	65-2770	2	Washer
15	99-3526	1	Plug ASM
15:1	60-5720	1	O-Ring
15:2	59-7730	1	Washer-Backup

Ref.	Part Number	Qty.	Description
16	99-3531	2	Spring
17	60-6450	1	Disc
18	353-989	1	Plug-Hex, Hollow
18:1	237-42	1	O-Ring
19	58-6780	1	Plug
19:1	58-6790	1	O-Ring
20	58-6320	2	Wiper
21	99-3528	1	Plunger
22	58-6770	1	Plunger
23	58-6760	1	Spring
31	99-3530	1	Seal Kit
31:1	58-6290	3	Poppet
31:2	58-6450	4	O-Ring
31:3	58-6460	2	Ring-Retaining
31:4	58-6320	2	Wiper
31:5	58-6790	1	O-Ring
31:6	60-5720	4	O-Ring
31:7	58-6340	2	O-Ring
31:8	237-42	1	O-Ring
31:9	59-7730	2	Washer-Backup

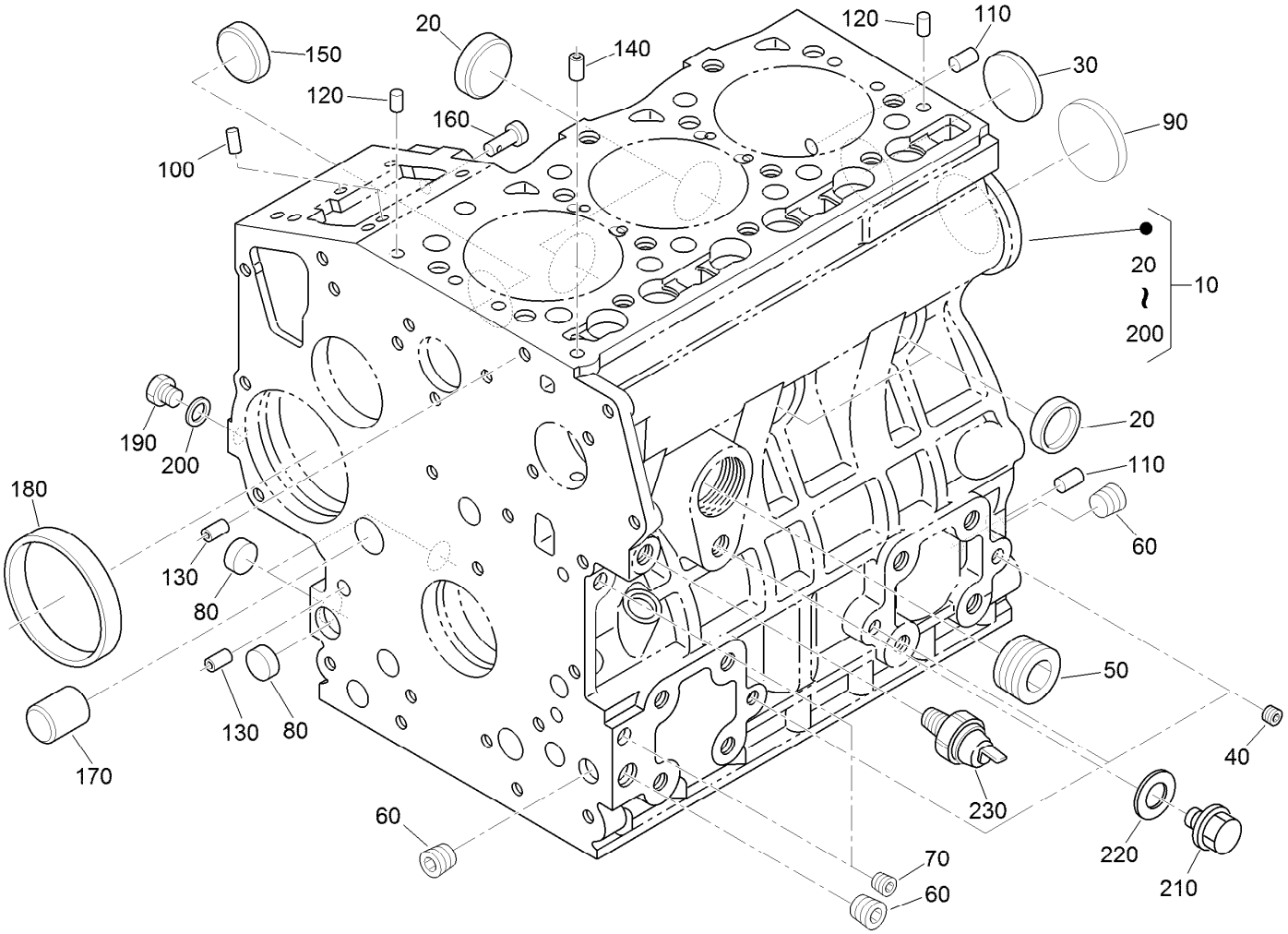

Crankcase Assembly

Ref.	Part Number	Qty.	Description
10	115-3443	1	Crankcase ASM
20	98-9398	4	Cap-Sealing
30	98-7539	1	Cap-Sealing
40	98-9687	3	Plug
50	105-3779	1	Plug
60	98-9597	3	Plug
70	98-7487	2	Plug
80	98-9379	3	Plug-Expansion
90	98-9668	1	Plug-Expansion
100	98-9375	2	Pin-Straight
110	98-9377	2	Pin-Straight
120	98-9376	2	Pin-Straight

Ref.	Part Number	Qty.	Description
130	98-9387	2	Pin-Pipe
140	98-9539	1	Pin-Pipe
150	98-9599	1	Plug
160	98-9630	1	Pin-Spring, Start
170	98-9675	1	Plug
180	98-9656	1	Bushing-Governor, Gear
190	120-2559	1	Plug
200	98-7428	1	Gasket
210	99-3447	1	Plug
220	106-7056	1	Gasket
230	98-9416	1	Switch-Oil

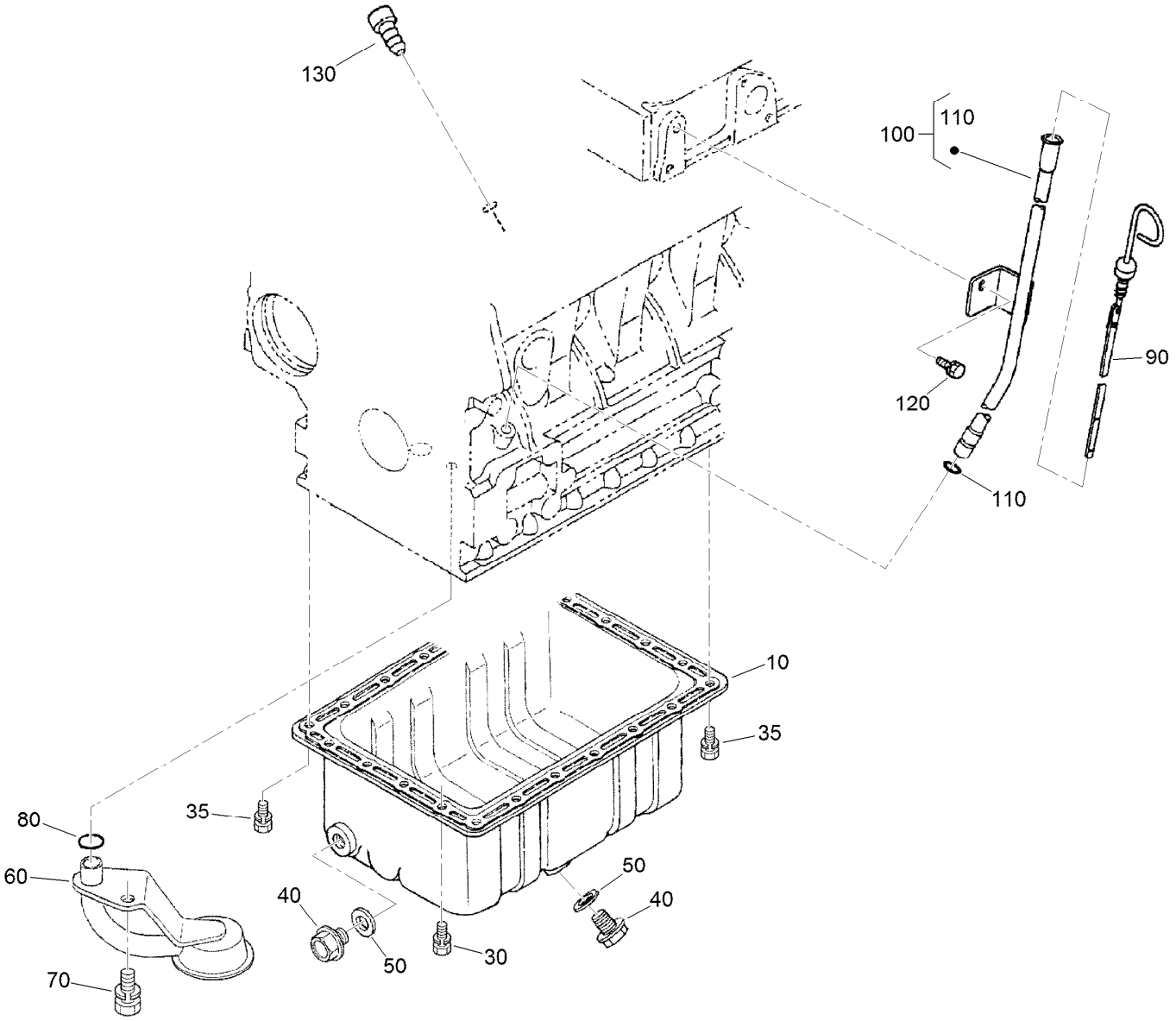

Oil Pan and Dipstick Assembly

Ref.	*Part Number*	*Qty.*	*Description*
10	98-9685	1	Pan-Oil
30	98-9351	20	Bolt
35	98-9351	2	Bolt
40	114-8151	1	Plug-Drain
50	98-7524	1	Gasket
60	108-1401	1	Base-Filter
70	98-7526	1	Bolt
80	105-3776	1	O-Ring
90	98-9670	1	Gauge-Oil
100	98-9672	1	Oil Gauge Guide ASM
110	98-9722	1	O-Ring
120	100-9195	1	Bolt
130	110-3720	1	Plug-Gauge, Oil

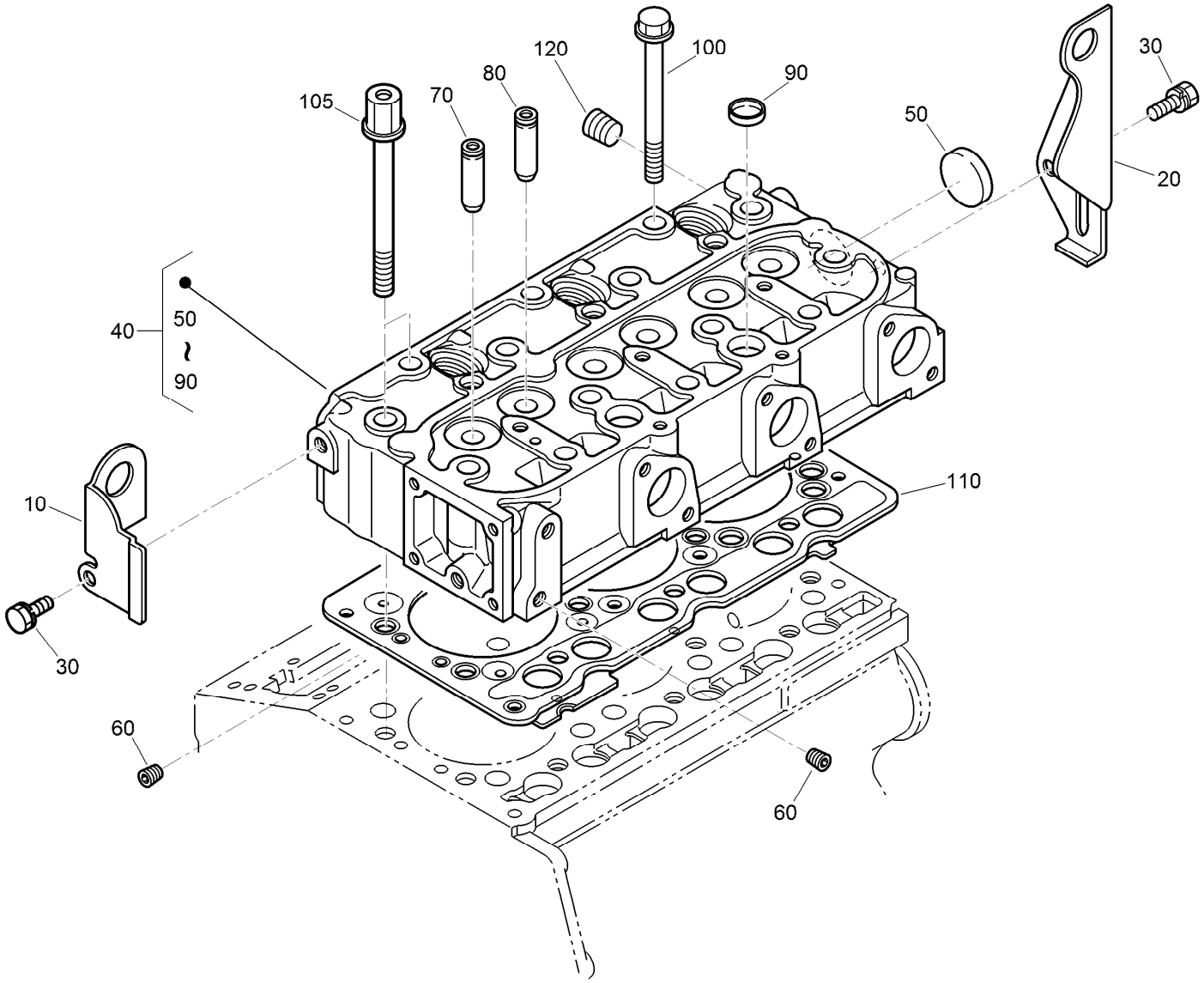

Cylinder Head Assembly

Ref.	Part Number	Qty.	Description
10	130-1231	1	Hook-Engine
20	98-9478	1	Hook-Engine
30	100-9195	2	Bolt
40	138-6997	1	Cylinder Head ASM
50	105-3705	1	Cap-Sealing
60	98-9687	2	Plug
70	107-9066	3	Guide-Valve, Inlet
80	107-9067	3	Guide-Valve, Exhaust
90	98-9389	2	Cap-Sealing
100	98-9479	12	Bolt-Head, Cylinder
105	98-9647	2	Bolt-Head, Cylinder
110	108-6573	1	Gasket-Head, Cylinder
120	98-9444	1	Plug

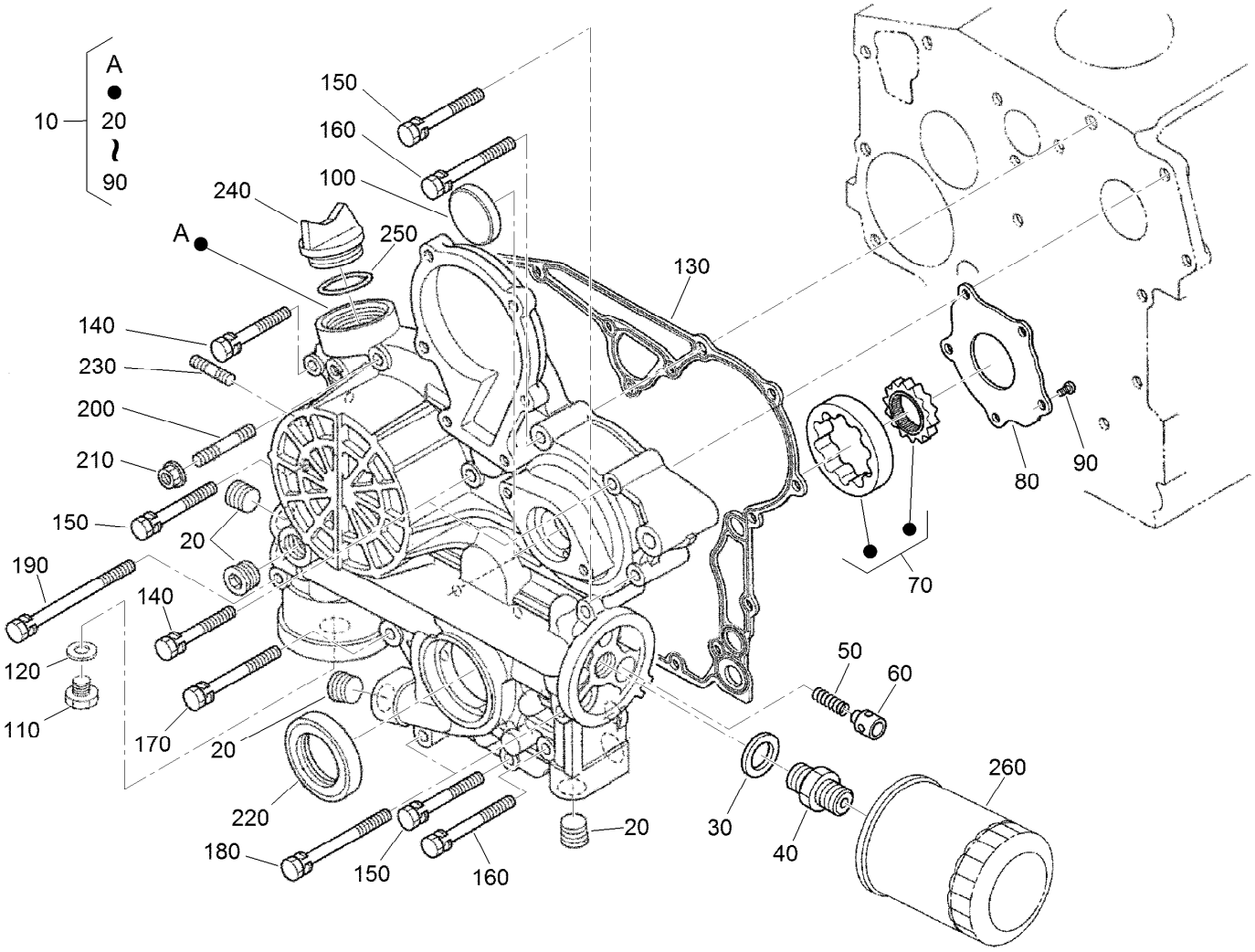

Gear Case and Oil Filter Cartridge Assembly

Ref.	Part Number	Qty.	Description
10	115-3442	1	Comp Gear Case
20	127-0425	5	Plug
30	98-7562	1	Washer-Plain
40	98-9388	1	Joint-Pipe
50	130-1511	1	Spring
60	130-1510	1	Valve-Relief
70	130-1508	1	Rotor ASM
80	130-1509	1	Cover-Pump, Oil
90	130-1164	5	Screw-Binding
100	99-3515	1	Plug-Gearcase
110	99-3450	1	Plug
120	99-3451	1	Plug-Packing
130	98-9633	1	Gasket-Case, Gear

Ref.	Part Number	Qty.	Description
140	100-1765	3	Bolt
150	125-9063	4	Bolt-Sems
160	98-9356	2	Bolt
170	98-9437	1	Bolt
180	98-9586	2	Bolt
190	99-3511	1	Bolt
200	105-3709	1	Stud
210	100-2203	1	Nut-Flange
220	119-8038	1	Seal-Oil
230	105-3710	2	Stud
240	107-9075	1	Plug-Filler, Oil
250	99-3446	1	O-Ring
260	127-0511	1	Filter-Oil

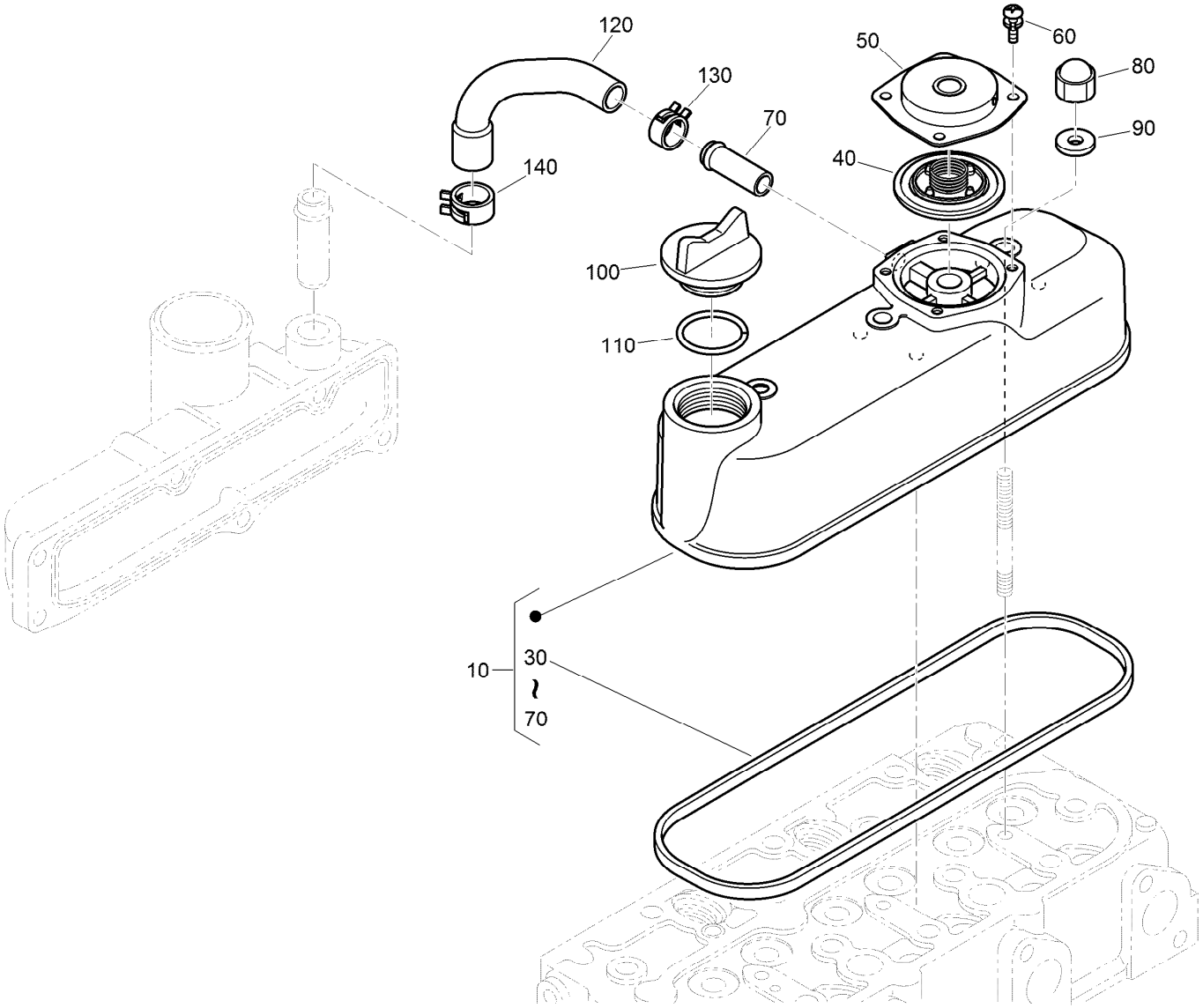

Cylinder Head Cover Assembly

Ref.	Part Number	Qty.	Description
10	130-1372	1	Cylinder Head Cover ASM
30	98-9615	1	Gasket-Cover, Head
40	110-3715	1	Valve-Breather
50	110-3714	1	Cover-Breather
60	98-9364	4	Screw (With Washer)
70	98-7766	1	Pipe-Return, Water
80	98-9455	3	Nut-Cap
90	98-9454	3	Gasket
100	107-9075	1	Plug-Filler, Oil
110	99-3446	1	O-Ring
120	107-7836	1	Tube-Breather
130	108-2859	1	Clamp-Hose
140	108-2860	1	Clamp-Hose

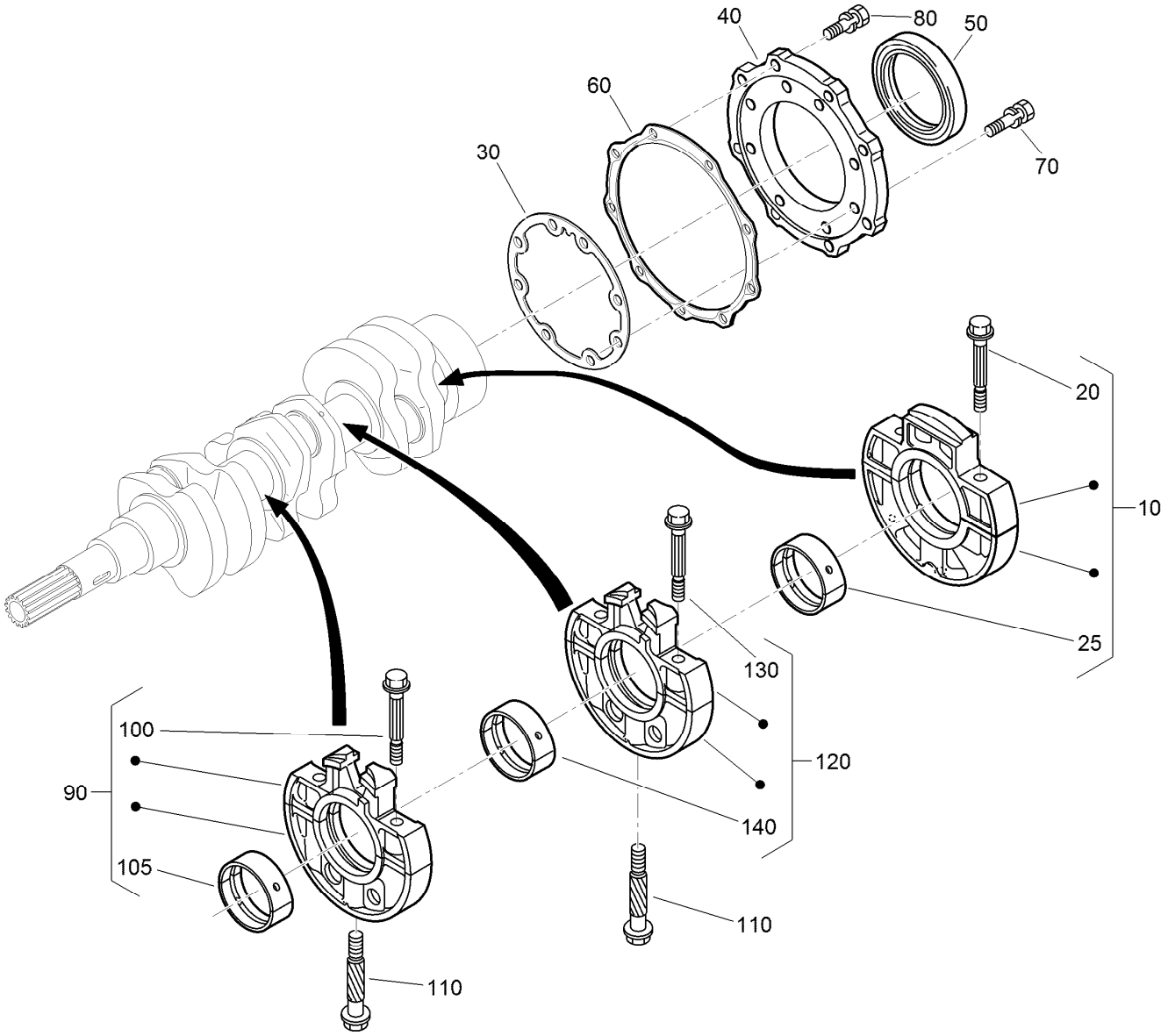

Main Bearing Case Assembly

Ref.	Part Number	Qty.	Description
10	112-7026	1	Wheel Bearing Case ASM
20	98-9484	2	Bolt-Case, Bearing
25	115-4121	1	Metal-Crankshaft (STD)
25	112-7039	1	Metal-Crankshaft (0.2Mm)
25	112-7040	1	Metal-Crankshaft (-0.4Mm)
30	127-0440	1	Gasket-Case, Bearing
40	112-7046	1	Cover-Case, Bearing
50	112-0180	1	Seal-Oil
60	112-7037	1	Gasket-Cover, Case
70	127-0441	8	Bolt
80	127-0442	9	Bolt

Ref.	Part Number	Qty.	Description
90	115-4106	1	Main Bearing Case ASM
100	98-9484	2	Bolt-Case, Bearing
105	98-9524	1	Metal-Crankshaft (STD Set)
105	127-0433	1	Metal-Crankshaft (-0.2MM)
105	98-9531	1	Bearing-Main (0.4MM)
110	98-9485	2	Bolt-Case, Bearing
120	115-4107	1	Main Bearing Case ASM
130	98-9484	2	Bolt-Case, Bearing
140	98-9524	1	Metal-Crankshaft (STD Set)
140	127-0433	1	Metal-Crankshaft (-0.2MM)
140	98-9531	1	Bearing-Main (0.4MM)

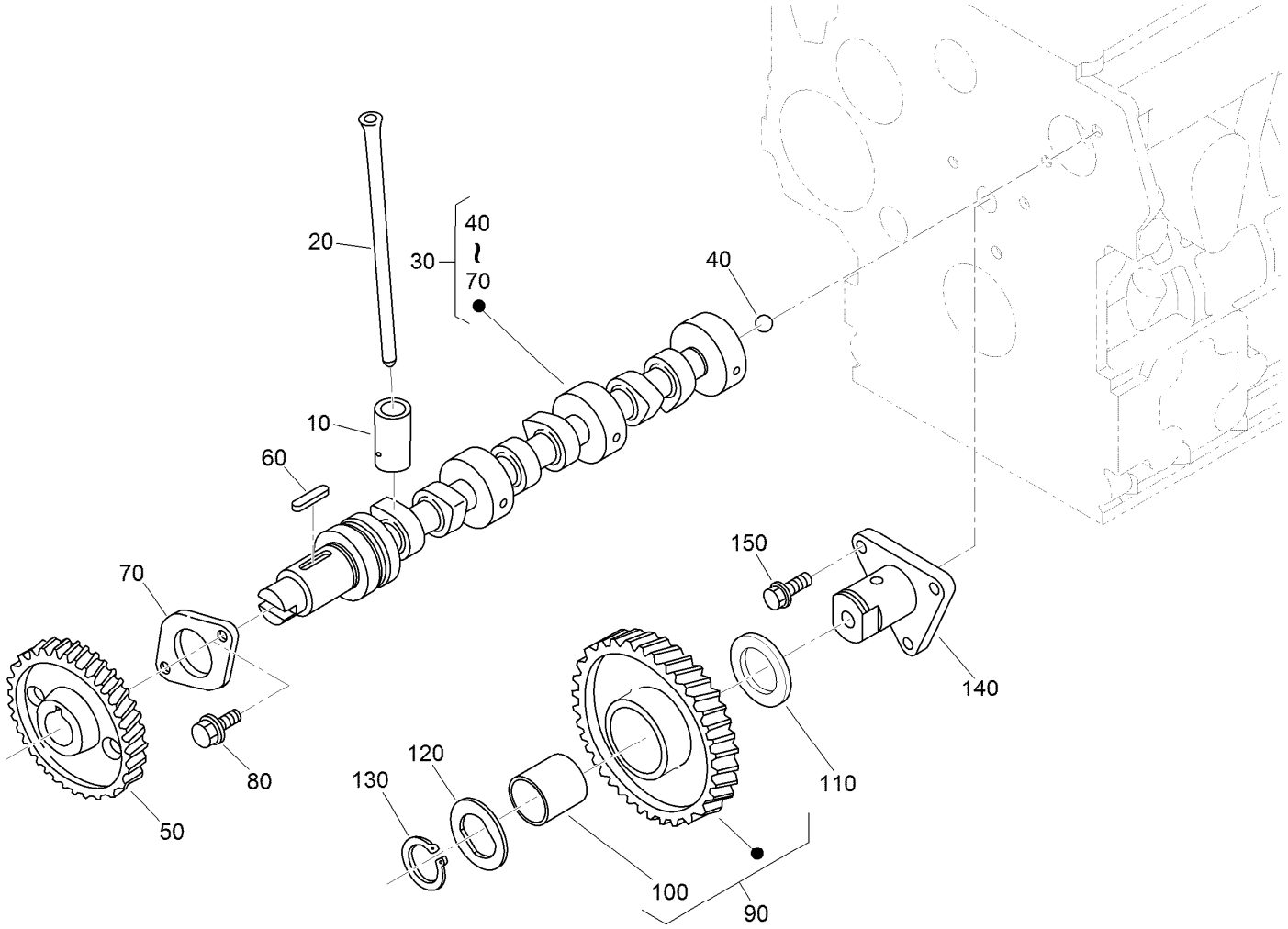

Camshaft and Idle Gear Shaft Assembly

Ref.	Part Number	Qty.	Description
10	112-0185	6	Tappet
20	127-0421	6	Rod-Push
30	130-1505	1	Camshaft ASM
40	110-3729	1	Ball
50	120-3116	1	Camshaft ASM
60	98-9378	1	Key-Feather
70	98-9510	1	Stopper-Camshaft
80	98-7692	2	Bolt
90	117-7584	1	Idler Gear ASM
100	117-7585	1	Bushing-Gear, Idle
110	98-9535	1	Collar-Gear, Idle
120	98-9536	1	Collar-Gear, Idle
130	98-9534	1	Circlip-Gear, Idle
140	98-9533	1	Shaft-Gear, Idle
150	98-7692	3	Bolt

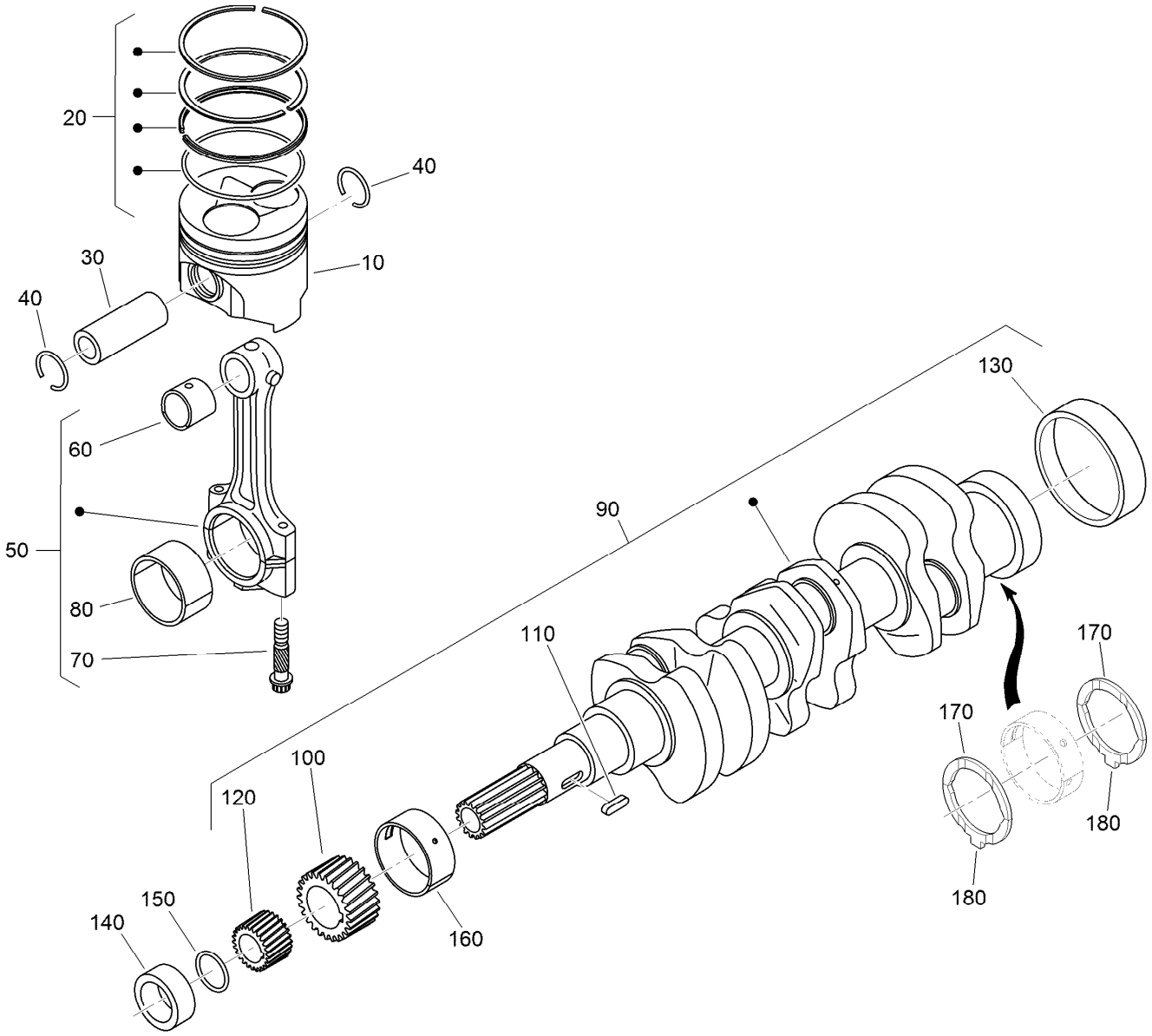

Piston and Crankshaft Assembly

Ref.	Part Number	Qty.	Description
10	130-1546	3	Piston (STD)
10	130-1549	3	Piston (+0.50MM)
20	130-1506	3	Piston Ring ASM (STD)
20	130-1507	3	Piston Ring ASM (+0.50MM)
30	98-9513	3	Pin-Piston
40	98-9514	6	Circlip-Pin, Piston
50	117-7586	3	Connecting Rod ASM
60	115-3014	3	Bushing-Pin, Piston
70	98-9517	6	Bolt-Rod, Connecting
80	98-9553	3	Bearing-Rod (STD)
80	98-9519	3	Bearing-Rod (-0.2MM)
80	117-7588	3	Metal-Crankpin (-0.4MM)
90	130-1375	1	Crankshaft ASM
100	117-7561	1	Gear-Crankshaft

Ref.	Part Number	Qty.	Description
110	98-9666	1	Key
120	127-0445	1	Gear-Drive, Oil Pump
130	98-9522	1	Sleeve-Crankshaft
140	127-0444	1	Collar-Crankshaft
150	105-3783	1	O-Ring
160	112-7005	1	Bearing-Main (STD)
160	98-9528	1	Bearing-Main (-0.2MM)
160	130-1274	1	Metal-Crankshaft (-0.40Mm)
170	98-9413	2	Bearing-Thrust (STD)
170	127-0416	2	Metal-Side (+0.2Mm)
170	127-0417	2	Metal-Side (+0.40Mm)
180	98-9688	2	Bearing-Thrust (STD)
180	127-0437	2	Metal-Side (+0.2MM)
180	127-0438	2	Metal-Side (+0.40MM)

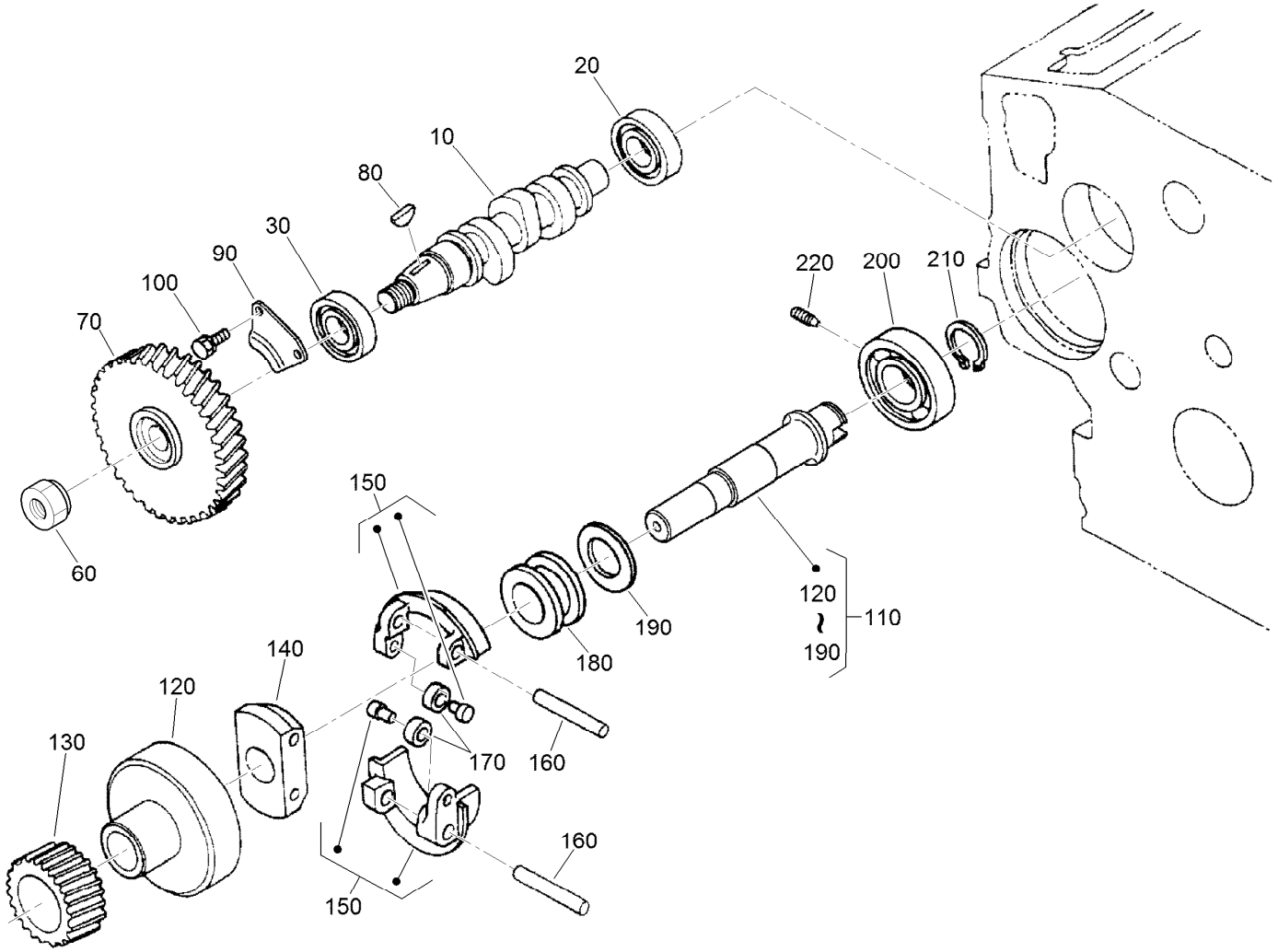

Fuel Camshaft and Governor Shaft Assembly

Ref.	Part Number	Qty.	Description
10	98-9459	1	Camshaft-Fuel
20	107-9077	1	Bearing-Ball
30	107-9078	1	Bearing-Ball
60	130-1512	1	Nut
70	130-1378	1	Gear-Injection Pump
80	98-9595	1	Key-Woodruff
90	98-9511	1	Stopper-Fuel, Camshaft
100	98-7692	2	Bolt
110	130-1255	1	Governor Shaft ASM
120	98-9562	1	Holder-Gear, Governor

Ref.	Part Number	Qty.	Description
130	98-9673	1	Gear-Governor
140	98-9561	1	Holder-Weight, Governor
150	98-9559	2	Governor Weight ASM
160	98-9560	2	Shaft-Weight, Governor
170	98-9692	2	Roller
180	98-9563	1	Sleeve-Governor
190	98-9564	1	Washer-Thrust
200	107-9079	1	Bearing-Ball
210	98-9657	1	Circlip-Shaft, Governor
220	98-9565	1	Screw-Set

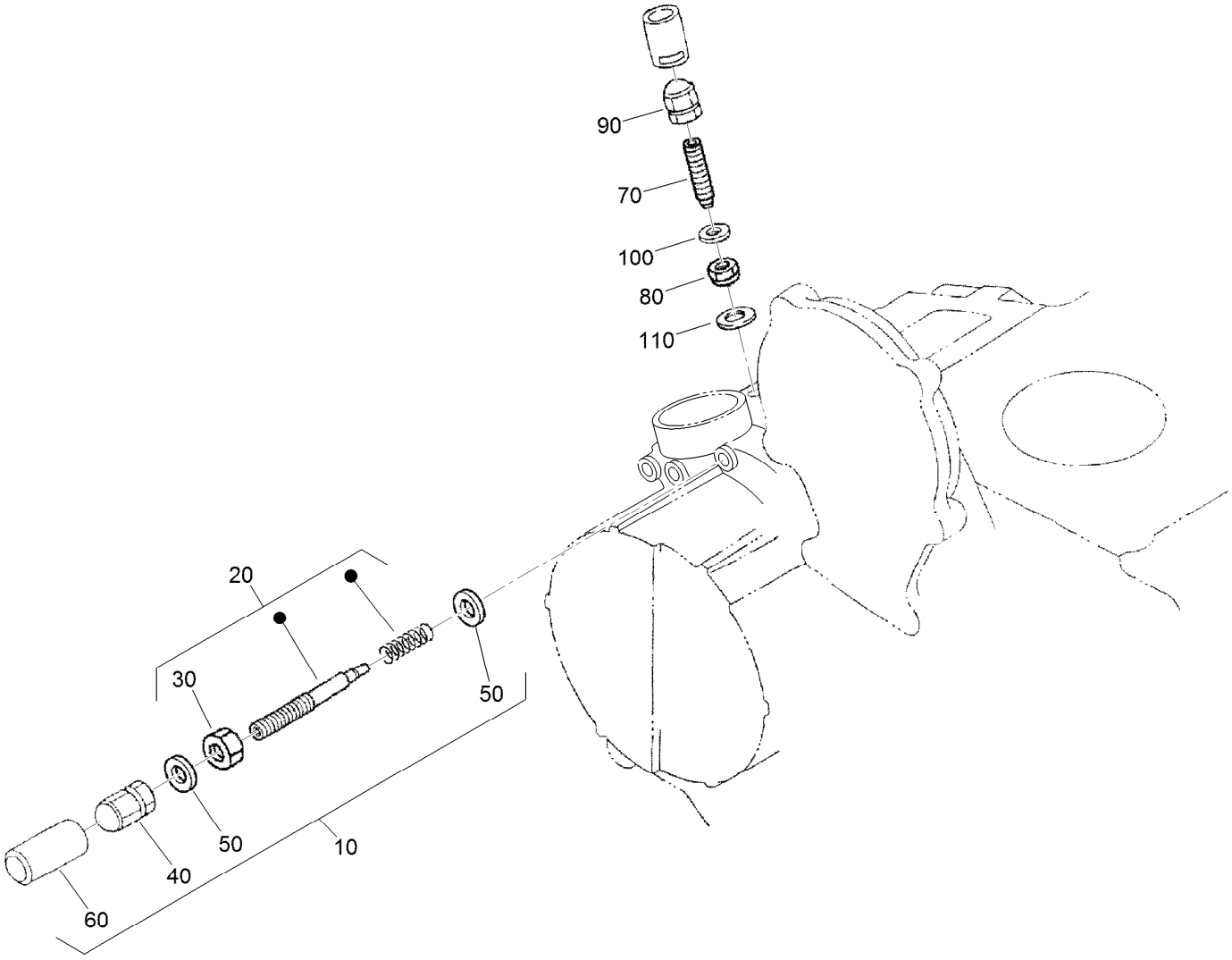

Idle Apparatus Assembly

Ref.	*Part Number*	*Qty.*	*Description*
10	107-7838	1	Apparatus-Idling
20	130-1253	1	Adjusting Bolt ASM
30	98-9439	1	Nut
40	112-0181	1	Nut
50	98-7654	2	Gasket
60	98-7656	1	Cap
70	112-7015	1	Bolt-Adjusting
80	100-2175	1	Nut-Lock
90	112-0181	1	Nut
100	98-7654	1	Gasket
110	107-9081	1	Gasket

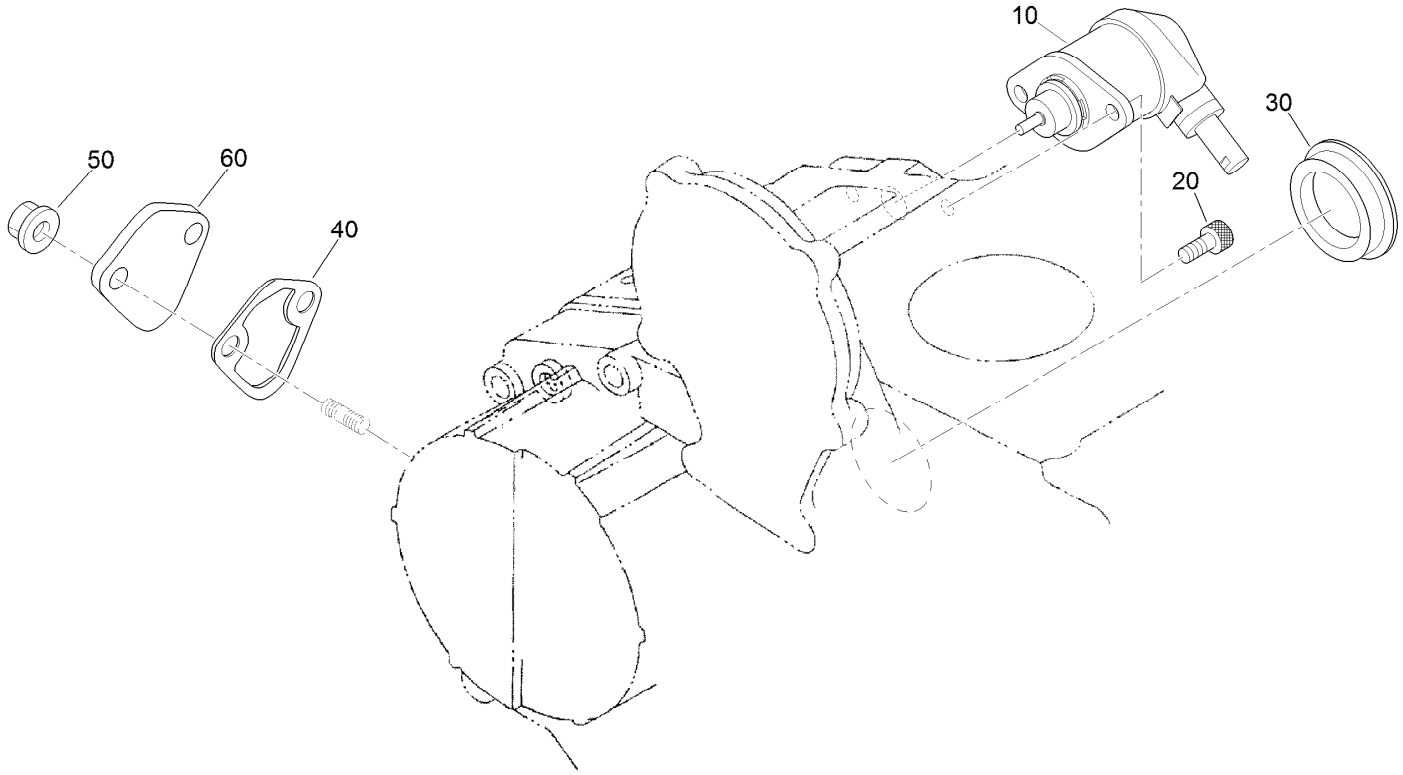

Stop Solenoid and Fuel Pump Cover Assembly

Ref.	*Part Number*	*Qty.*	*Description*
10	104-5155	1	Solenoid-Stop
20	130-1155	2	Screw-HSH
30	99-3514	1	Cover
40	117-7562	1	Gasket-Pump, Fuel
50	100-2203	2	Nut-Flange
60	112-7016	1	Cover-Pump

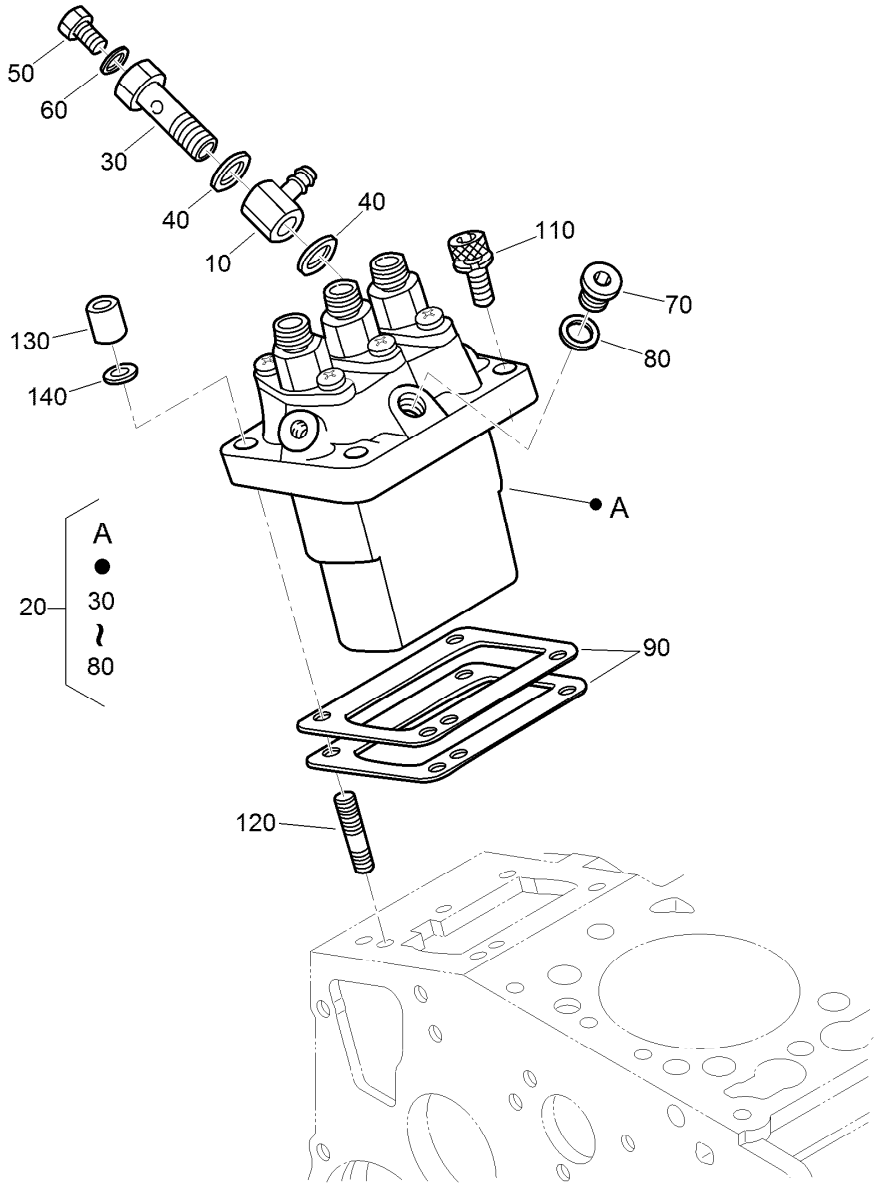

Injection Pump Assembly

Ref.	Part Number	Qty.	Description
10	98-9596	1	Joint-Eye
20	98-9643	1	Injection Pump ASM
30	98-9464	1	Bolt-Joint
40	98-9445	2	Gasket
50	98-9430	1	Screw
60	98-9446	1	Gasket
70	98-9466	1	Plug
80	98-9451	1	Gasket
90	98-9456	1	Shim-Injection (0.20MM)

Ref.	Part Number	Qty.	Description
90	98-9457	1	Shim-Injection (0.25MM)
90	98-9458	1	Shim-Injection (0.30MM)
90	115-3046	1	Shim-Injection (0.35MM)
90	115-3045	1	Shim-Injection (0.175MM)
110	117-7564	2	Bolt-Hex Soc HD
120	98-9438	2	Stud
130	98-9440	2	Nut-Cap
140	98-7699	2	Washer-Spring

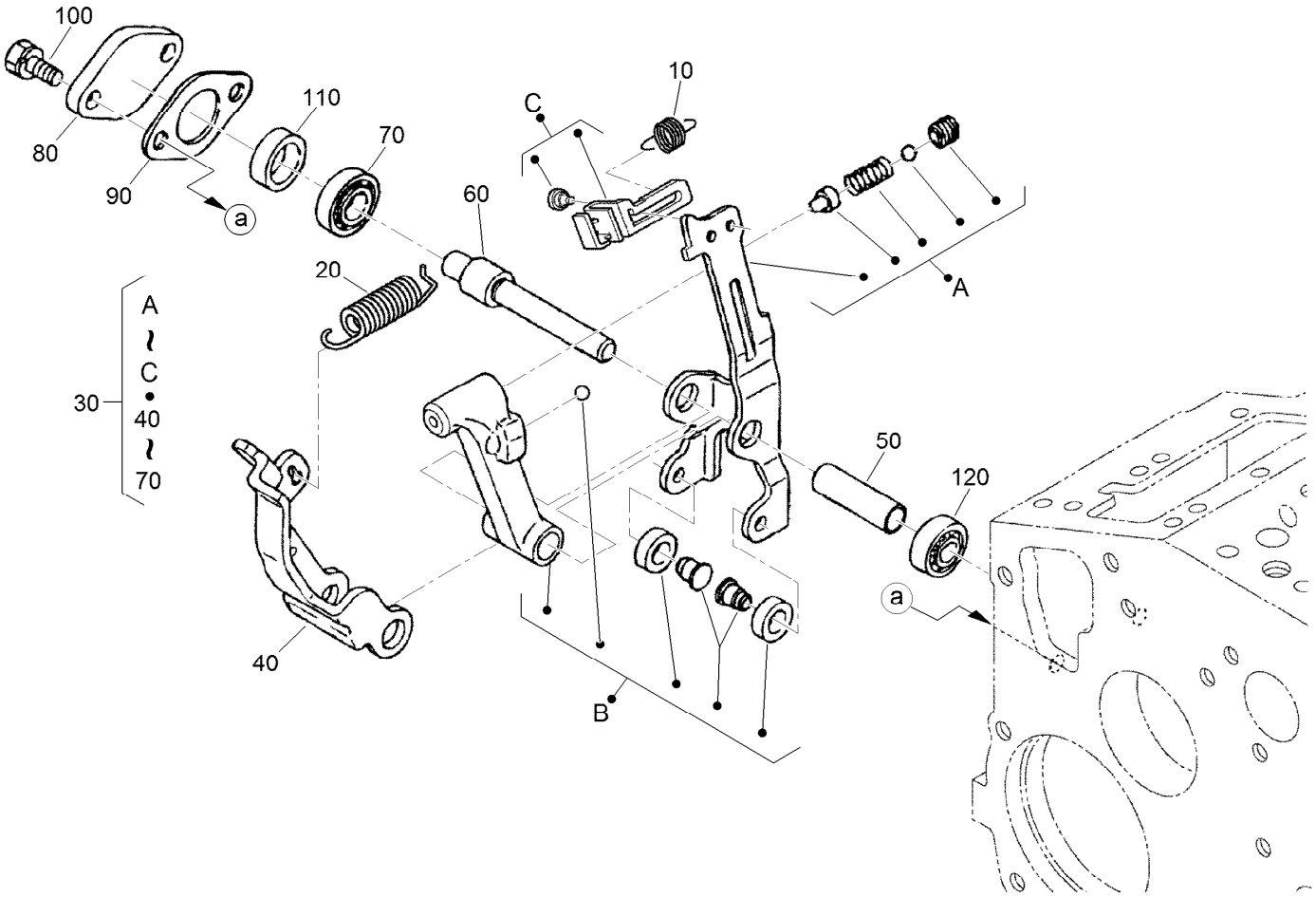

Governor Assembly

Ref.	Part Number	Qty.	Description
10	105-3786	1	Spring-Start
20	107-7839	1	Spring-Governor
30	107-7840	1	Fork Lever ASM
40	107-9084	1	Lever-Fork
50	107-9085	1	Shaft-Lever, Fork
60	107-9086	1	Shaft-Lever, Fork
70	98-9570	1	Bearing-Miniaturize
80	115-4122	1	Cover-Shaft, Fork Lever
90	98-9682	1	Gasket
100	98-9350	2	Bolt
110	98-9567	1	Collar
120	98-9571	1	Bearing-Miniaturize

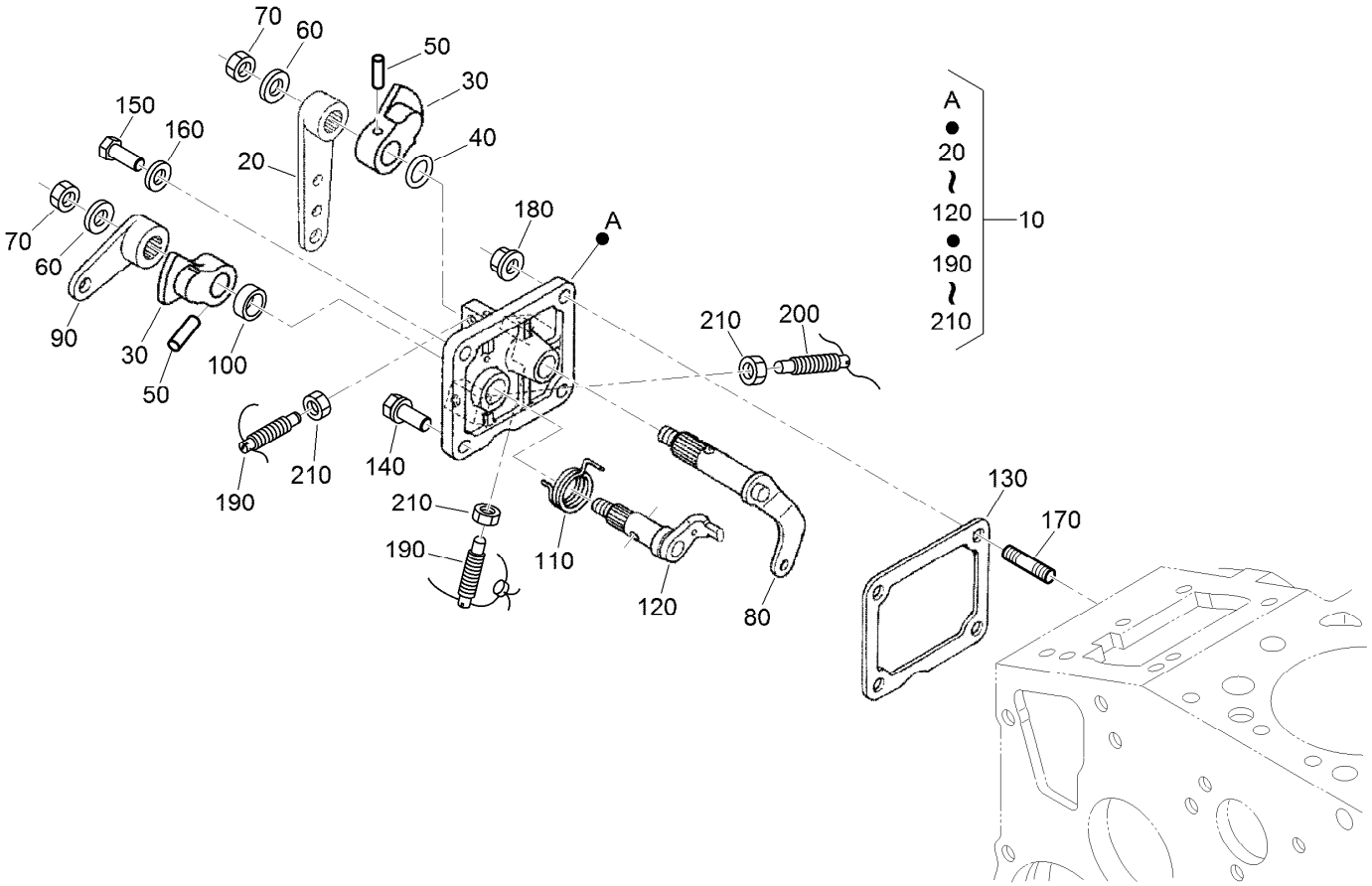

Speed Control Plate Assembly

Ref.	Part Number	Qty.	Description
10	105-3735	1	Control Plate ASM
20	98-9662	1	Lever-Control, Speed
30	98-9572	2	Lever-Control, Speed
40	105-3788	1	O-Ring
50	98-7602	2	Pin-Spring
60	98-9594	2	Washer-Plain
70	98-9589	2	Nut
80	98-9658	1	Governor Lever ASM
90	98-9663	1	Lever-Stop, Engine
100	98-7601	1	Seal-Oil
110	98-9472	1	Spring-Return
120	98-9664	1	Shaft-Lever, Stop
130	98-9637	1	Gasket
140	98-7692	1	Bolt
150	127-0401	1	Bolt-Hex
160	98-7654	1	Gasket
170	105-3710	2	Stud
180	100-2203	2	Nut-Flange
190	117-7565	2	Bolt-Adjusting
200	117-7566	1	Bolt-Adjusting
210	98-7572	3	Nut

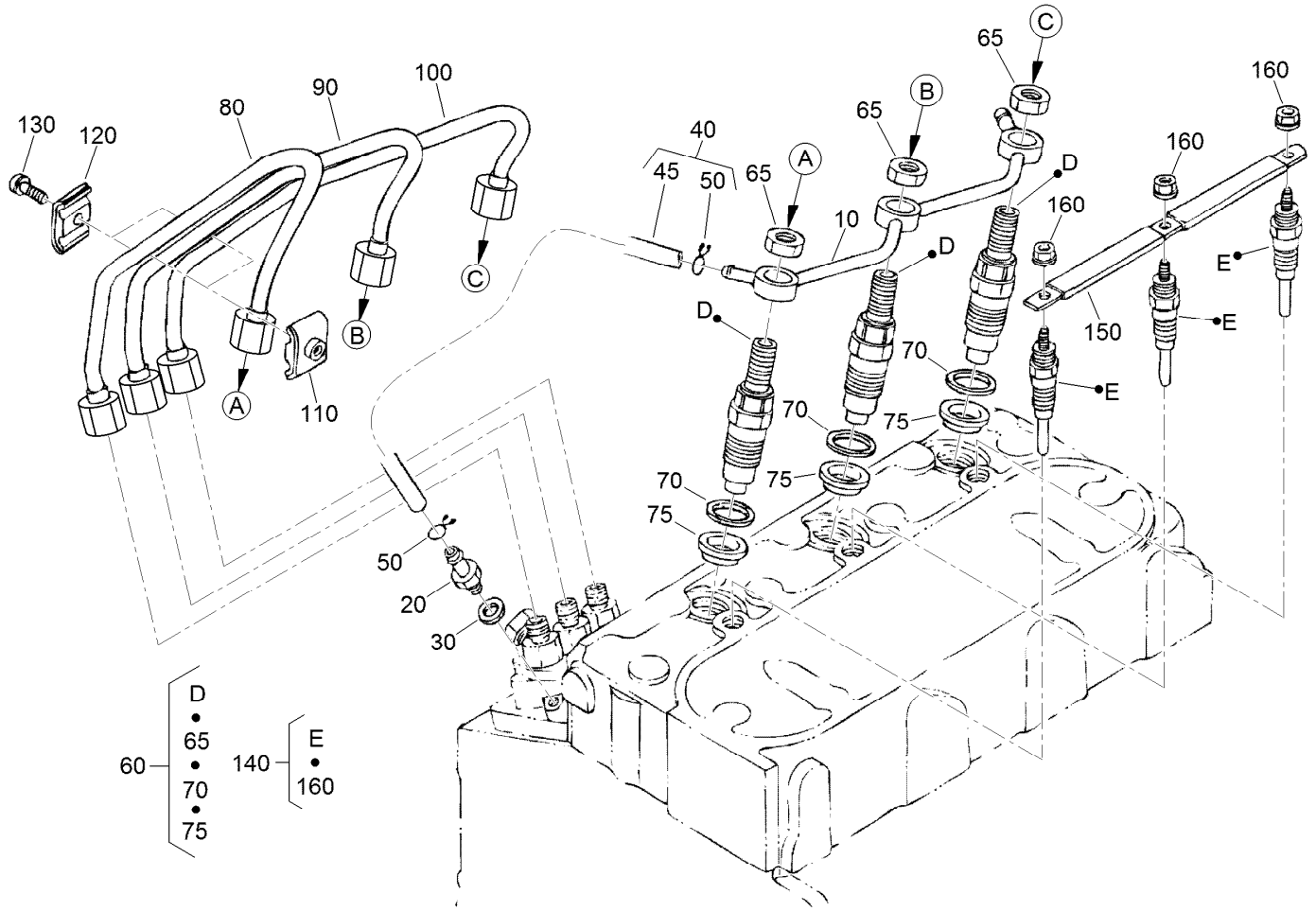

Nozzle Holder and Glow Plug Assembly

Ref.	Part Number	Qty.	Description
10	98-9620	1	Overflow Pipe ASM
20	98-9431	1	Screw-Bleeder, Air
30	98-7654	1	Gasket
40	98-9420	1	Overflow Pipe ASM
45	112-0182	1	Pipe-Overflow
50	98-7671	2	Clip-Pipe
60	115-3018	3	Nozzle Holder Kit
65	121-2411	3	Nut
70	98-7676	3	Gasket
75	98-7677	3	Seal-Heat

Ref.	Part Number	Qty.	Description
80	98-9622	1	Pipe-Injection
90	98-9654	1	Pipe-Injection
100	98-9655	1	Pipe-Injection
110	98-7682	2	Clamp-Pipe
120	98-7683	2	Clamp-Pipe
130	98-7684	2	Screw (W/Washer)
140	130-1411	3	Plug-Glow
150	98-9631	1	Cord-Plug, Glow
160	99-8377	3	Nut-Flange

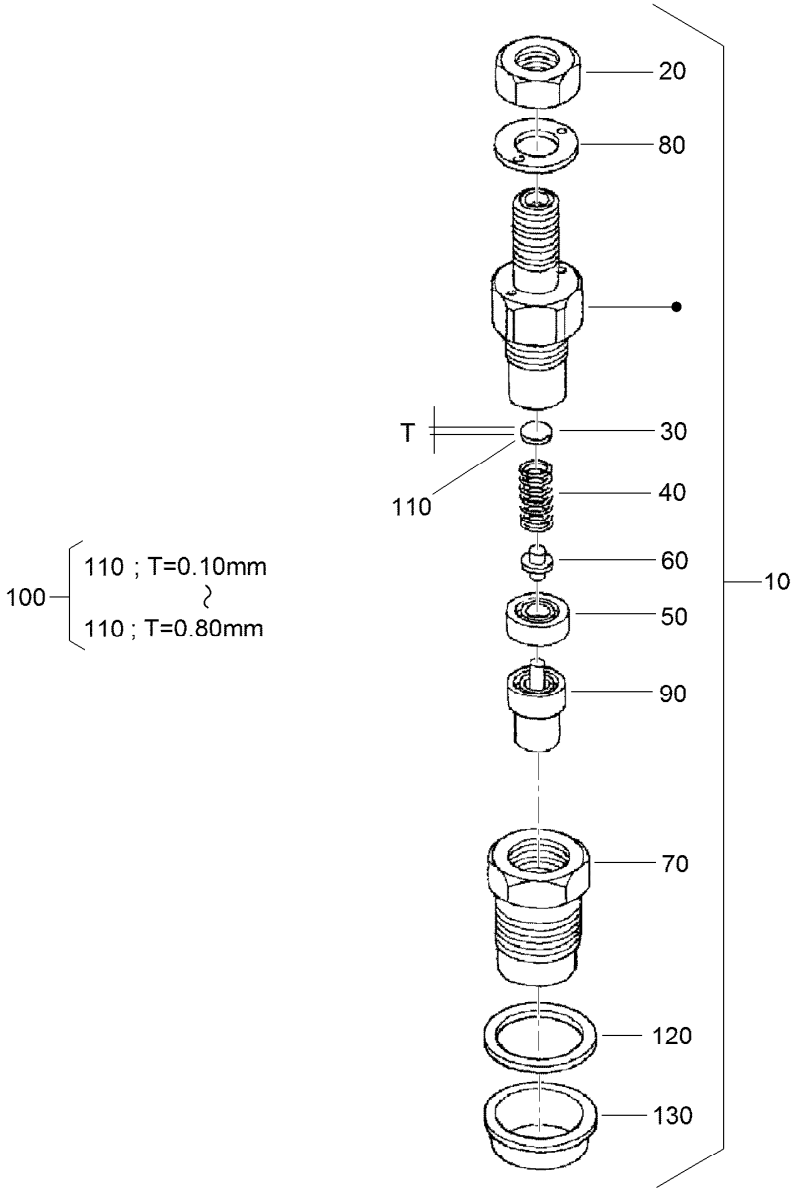

Nozzle Holder Assembly

Ref.	Part Number	Qty.	Description
10	115-3018	3	Nozzle Holder Kit
20	121-2411	3	Nut
30	99-8302	3	Washer-Adjusting
40	99-8303	3	Spring-Nozzle
50	99-8304	3	Spacer-Distance
60	99-8305	3	Rod-Push
70	99-8306	3	Nut-Nozzle
80	99-8307	3	Washer-Plain
90	115-3020	3	Piece-Nozzle
100	99-8309	3	Adjusting Washer ASM
110	99-8310	3	Washer-Adjust (0.10MM)

Ref.	Part Number	Qty.	Description
110	99-8311	3	Washer-Adjust (0.20MM)
110	99-8312	3	Washer-Adjust (0.30MM)
110	99-8313	3	Washer-Adjust (0.40MM)
110	99-8314	3	Washer-Adjust (0.50MM)
110	99-8315	3	Washer-Adjust (0.52MM)
110	99-8316	3	Washer-Adjust (0.54MM)
110	99-8317	3	Washer-Adjust (0.56MM)
110	99-8318	3	Washer-Adjust (0.58MM)
110	99-8319	3	Washer-Adjust (0.80MM)
120	98-7676	3	Gasket
130	98-7677	3	Seal-Heat

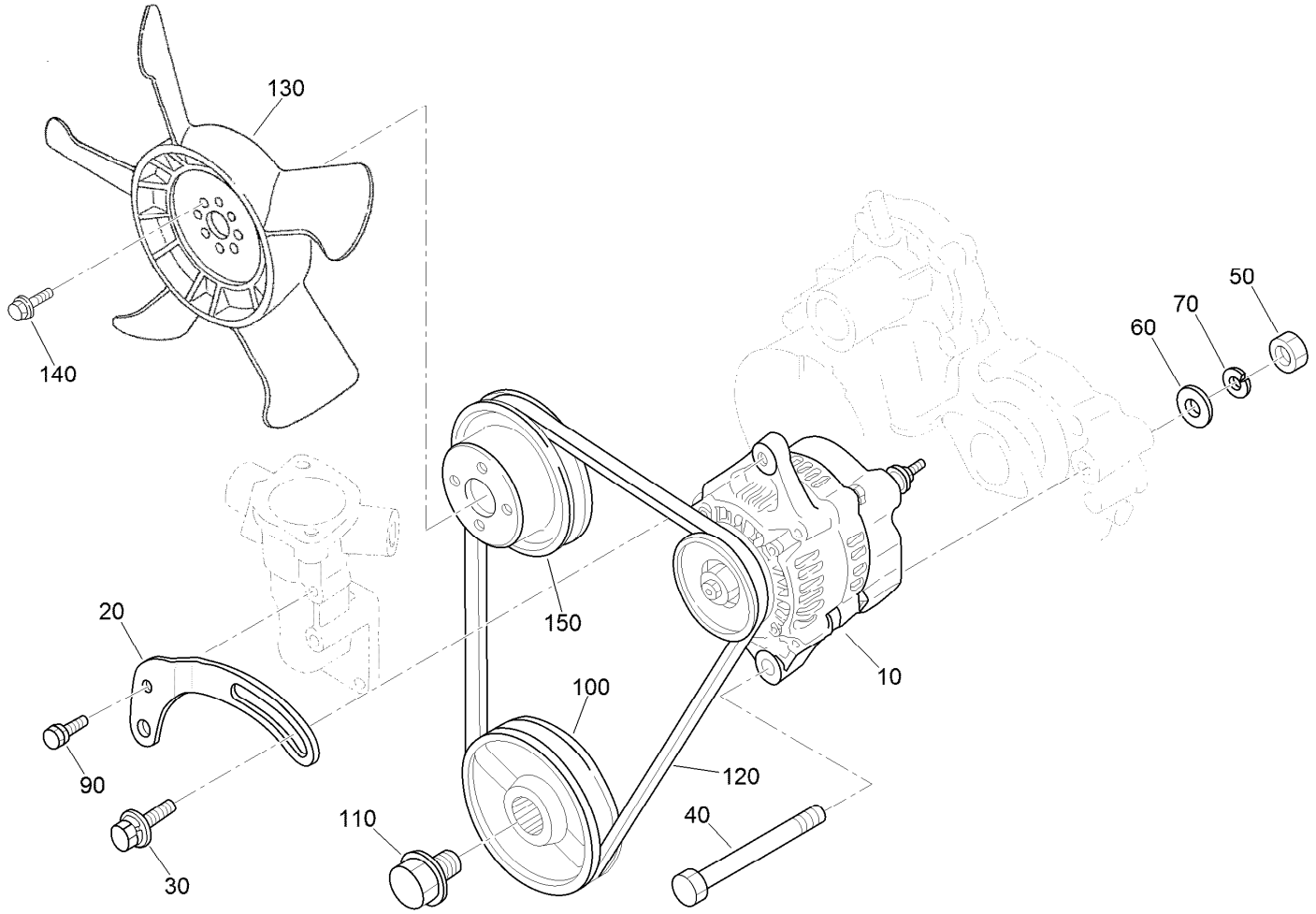

Alternator, Pulley and Fan Assembly

Ref.	*Part Number*	*Qty.*	*Description*
10	98-9474	1	Alternator ASM
20	112-7047	1	Stay-Dynamo
30	108-7088	1	Bolt
40	98-9360	1	Bolt
50	98-7737	1	Nut
60	98-9366	1	Washer-Plain
70	98-7738	1	Washer-Spring
90	98-7692	1	Bolt
100	99-3456	1	Pulley-Drive, Fan
110	98-9585	1	Bolt
120	130-1241	1	V Belt
130	99-3461	1	Fan
140	99-8363	4	Bolt-Flange
150	99-3453	1	Pulley-Fan

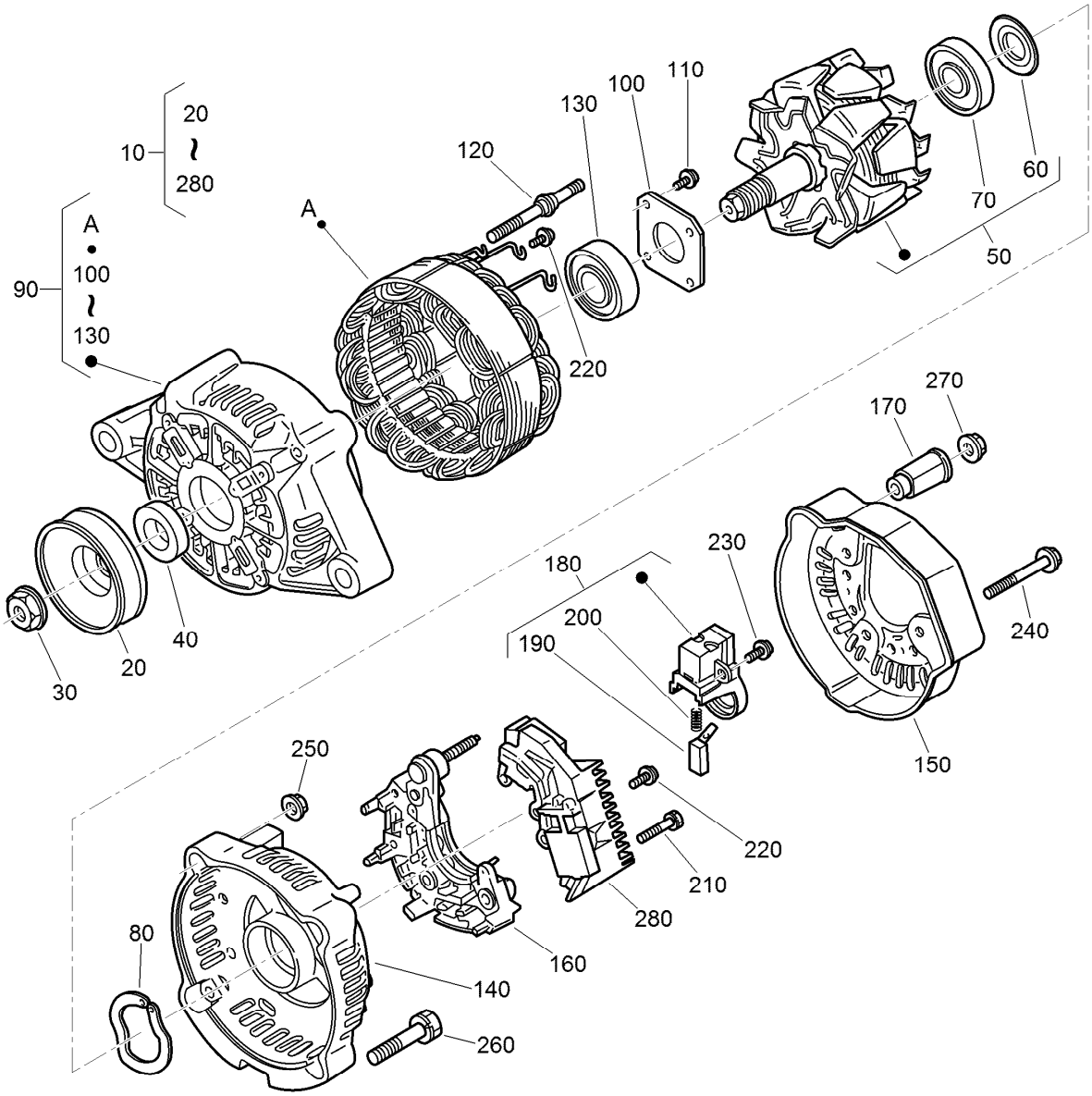

Alternator Components Assembly

Ref.	Part Number	Qty.	Description
10	98-9474	1	Alternator ASM
20	98-9453	1	Pulley-Dynamo
30	98-7708	1	Nut
40	98-7709	1	Collar
50	107-0136	1	Rotor ASM
60	98-7711	1	Cover-Bearing
70	107-0138	1	Bearing-Ball
80	98-7713	1	Washer-Thrust
90	107-0139	1	Drive End Frame ASM
100	98-7715	1	Plate-Retainer
110	98-7716	4	Screw-Head, Round
120	98-7717	2	Bolt-Through
130	133-2811	1	Bearing
140	107-9087	1	Frame-End

Ref.	Part Number	Qty.	Description
150	107-0140	1	Cover-End
160	127-1612	1	Rectifier ASM
170	98-7722	1	Bushing-Insulation
180	107-0141	1	Brush Holder ASM
190	98-7724	2	Brush
200	98-7725	2	Spring-Brush
210	98-7726	2	Screw-Head, Round
220	98-7727	6	Screw-Head, Round
230	98-7728	1	Screw-Head, Round
240	98-7729	3	Bolt
250	98-7730	2	Nut
260	98-7731	2	Bolt
270	98-7732	1	Nut
280	110-3799	1	Regulator ASM

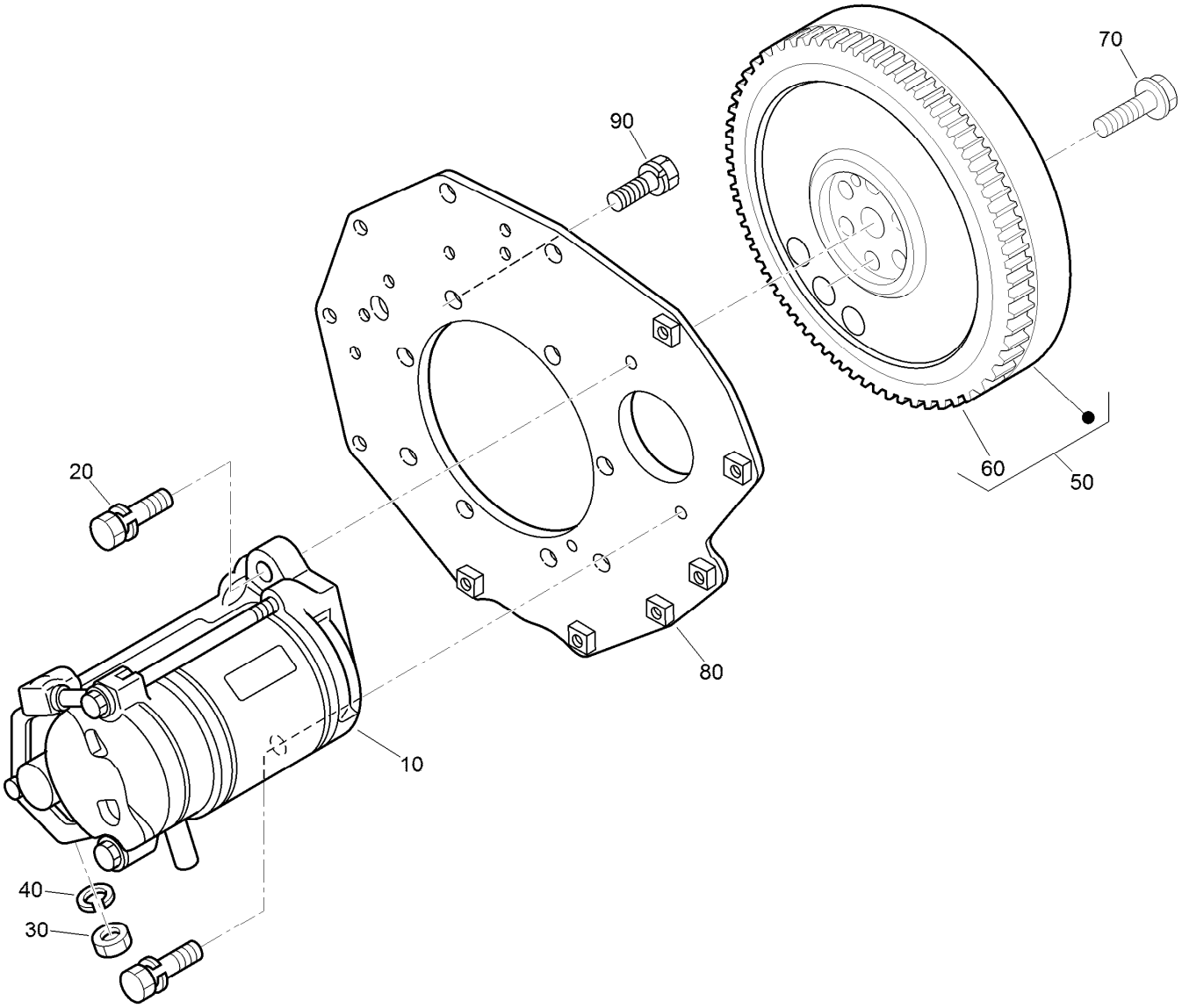

Starter and Flywheel Assembly

Ref.	*Part Number*	*Qty.*	*Description*
10	98-9705	1	Starter ASM
20	98-7697	2	Bolt
30	98-7739	1	Nut
40	105-2893	1	Washer-Spring
50	105-3784	1	Flywheel ASM
60	115-3015	1	Gear-Ring
70	98-9537	6	Bolt-Flywheel
80	98-9486	1	Plate-End, Rear
90	98-9392	8	Bolt

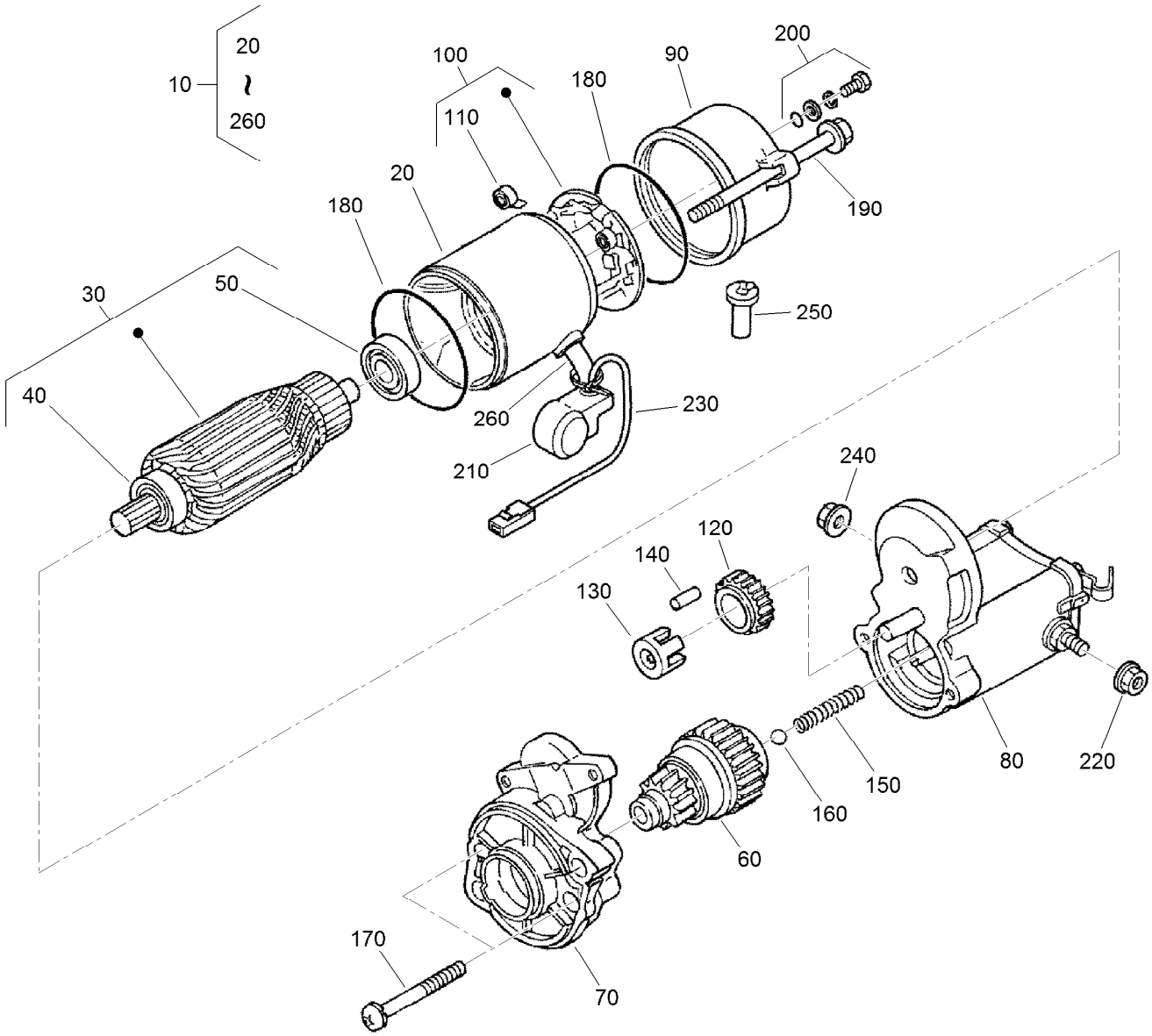

Starter Component Assembly

Ref.	Part Number	Qty.	Description
10	98-9705	1	Starter ASM
20	104-8608	1	Yoke ASM
30	98-7742	1	Armature ASM
40	98-7744	1	Bearing
50	98-7743	1	Bearing
60	99-8373	1	Clutch-Running, Over
70	99-8374	1	Frame-End, Drive
80	105-3746	1	Magnetic Switch ASM
90	98-7748	1	Frame-End
100	98-7749	1	Brush Holder ASM
110	98-7750	4	Spring-Brush
120	98-7751	1	Gear
130	98-7752	1	Retainer

Ref.	Part Number	Qty.	Description
140	98-7753	5	Roller
150	98-7754	1	Spring
160	98-7755	1	Ball
170	98-7756	2	Bolt
180	98-7757	2	O-Ring
190	100-9240	2	Bolt
200	98-7758	2	Bolt ASM
210	99-8375	1	Cover
220	99-8371	1	Nut-Hex
230	98-9711	1	Cord-Solenoid, Stop
240	99-8376	1	Nut-Hex
250	98-7759	1	Pipe-Drain
260	98-9712	1	Band-Cover

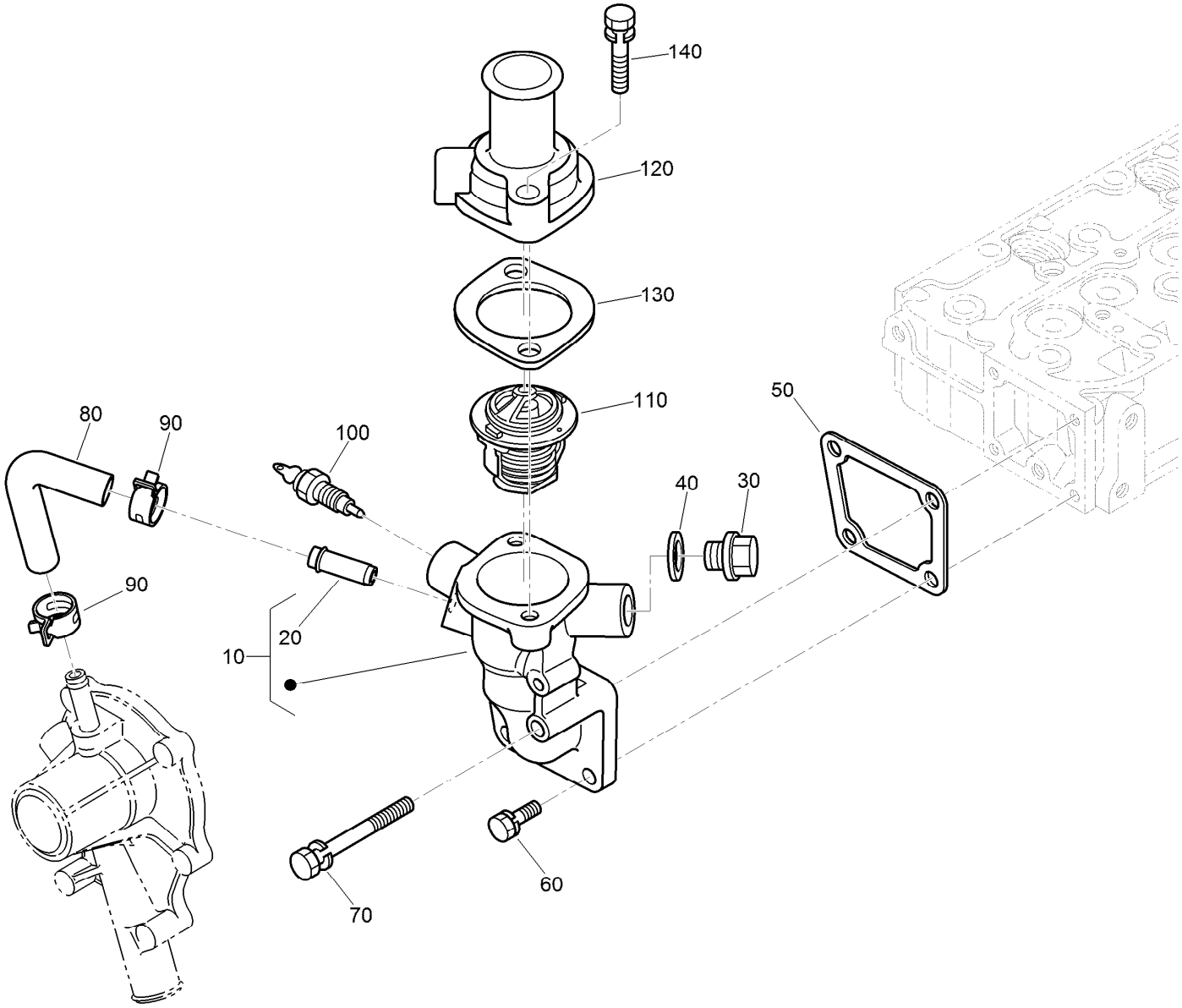

Water Flange and Thermostat Assembly

Ref.	Part Number	Qty.	Description
10	98-9713	1	Water Flange ASM
20	98-9580	1	Pipe-Return, Water
30	105-3747	1	Plug
40	99-3583	1	Gasket
50	98-9638	1	Gasket-Flange, Water
60	98-7692	3	Bolt
70	98-9356	1	Bolt
80	98-9578	1	Pipe-Return, Water
90	125-9078	2	Clamp-Hose
100	98-9719	1	Thermoswitch
110	98-7778	1	Thermostat ASM
120	98-9471	1	Cover-Thermostat
130	105-3748	1	Gasket-Thermostat
140	98-7777	2	Bolt

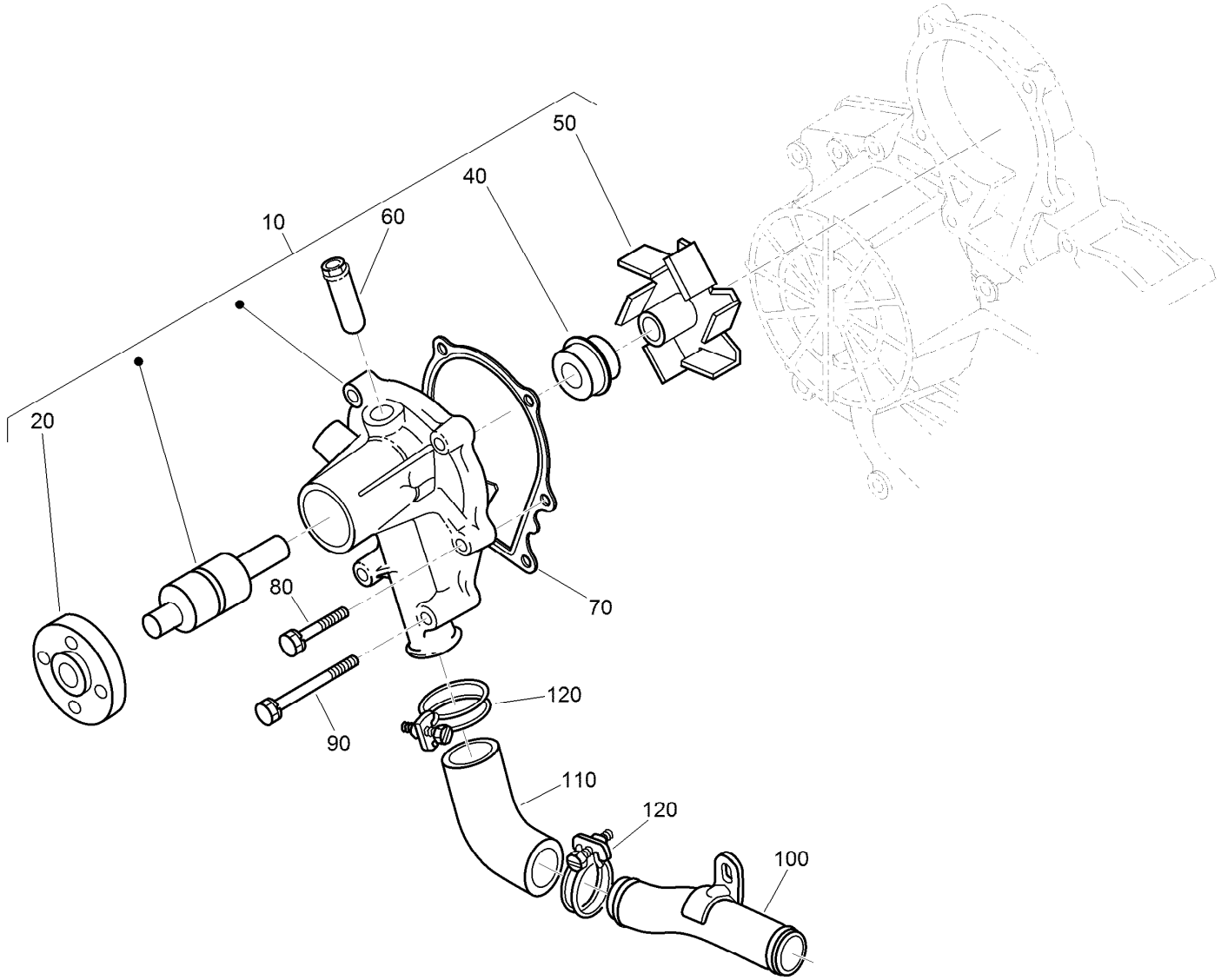

Water Pump and Water Pipe Assembly

Ref.	Part Number	Qty.	Description
10	107-9089	1	Water Pump ASM
20	99-3516	1	Flange-Pump, Water
40	105-3750	1	Mechanical Seal ASM
50	112-7017	1	Impeller-Pump, Water
60	100-1932	1	Pipe-Return, Water
70	99-3454	1	Gasket-Pump, Water
80	98-9353	4	Bolt
90	98-9357	2	Bolt
100	98-9716	1	Pipe-Water
110	107-9091	1	Pipe-Water
120	127-0439	2	Clamp-Hose

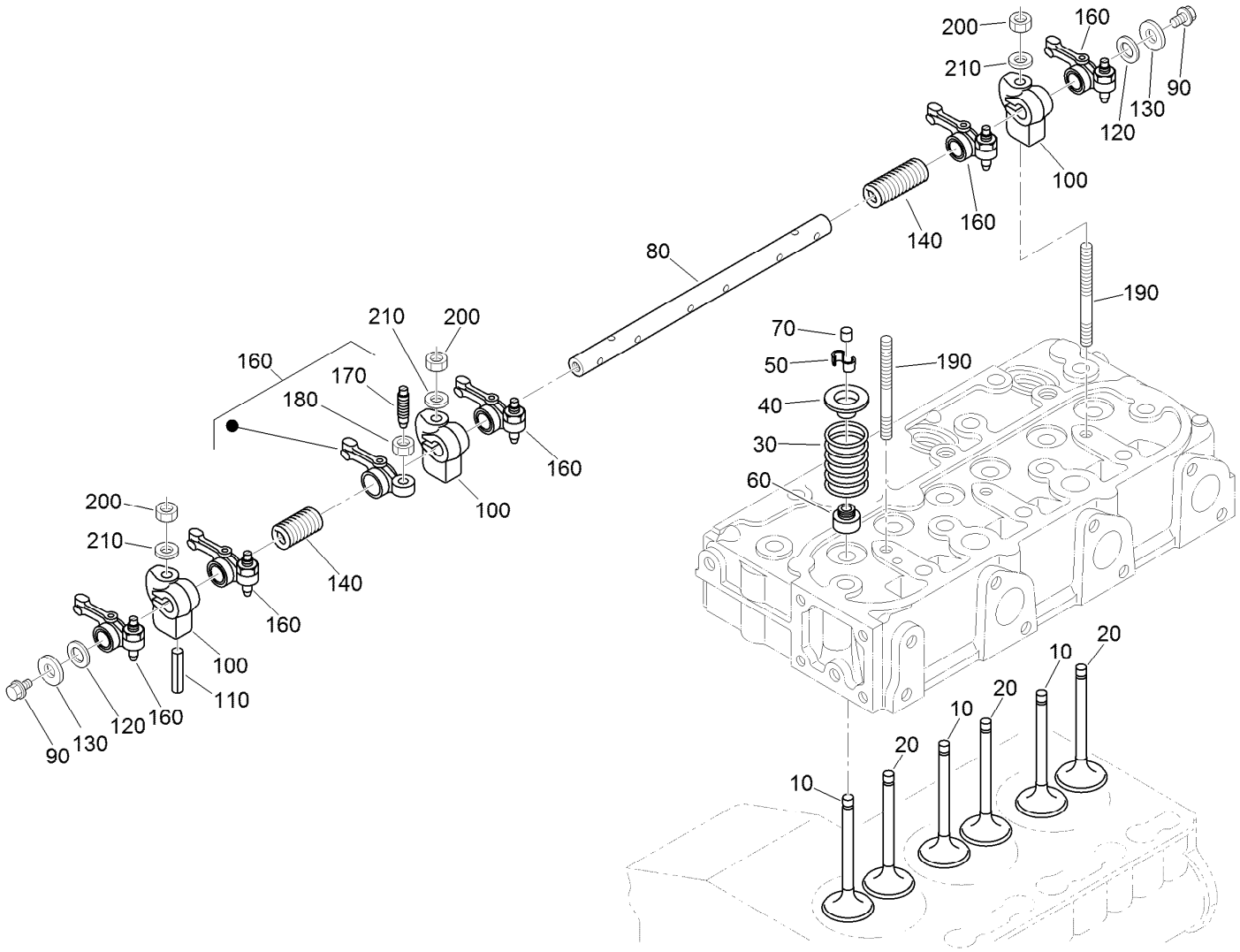

Valve and Rocker Arm Assembly

Ref.	Part Number	Qty.	Description
10	112-7018	3	Valve-Inlet
20	120-2564	3	Valve-Exhaust
30	98-9648	6	Spring-Valve
40	107-9092	6	Retainer-Spring
50	117-7572	6	Collet-Spring, Valve
60	99-8385	6	Seal-Stem, Valve
70	98-9497	6	Cap-Valve
80	130-1248	1	Shaft-Arm, Rocker
90	99-8363	2	Bolt-Flange
100	98-9505	3	Bracket-Arm, Rocker

Ref.	Part Number	Qty.	Description
110	105-3758	1	Pin-Spring
120	98-9507	2	Washer-Shaft, Rocker Arm
130	110-3832	2	Washer-Plain
140	98-9504	2	Spring-Arm, Rocker
160	112-7020	6	Rocker Arm ASM
170	98-9502	6	Screw-Adjusting
180	98-9503	6	Nut
190	98-9506	3	Stud
200	98-9393	3	Nut
210	98-9385	3	Washer-Flat

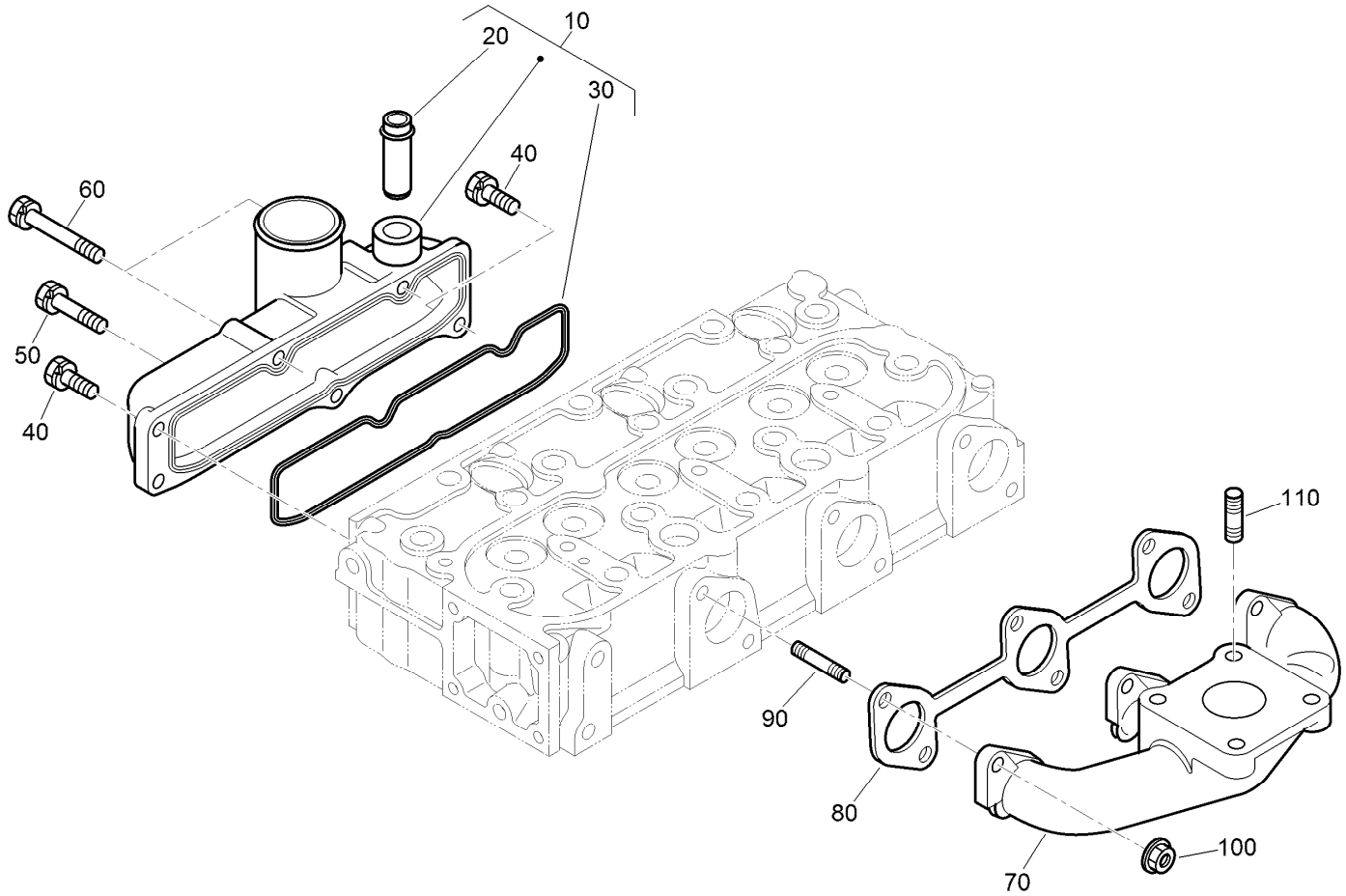

Inlet and Exhaust Manifold Assembly

Ref.	*Part Number*	*Qty.*	*Description*
10	107-7843	1	Manifold Inlet ASM
20	98-9492	1	Joint-Pipe, Breather
30	98-9609	1	Gasket-Manifold, Inlet
40	127-0403	3	Bolt-Flange
50	98-9353	1	Bolt
60	125-9063	2	Bolt-Sems
70	107-9093	1	Manifold-Exhaust
80	99-8327	1	Gasket-Manifold, Exhaust
90	98-9588	6	Stud
100	98-9665	6	Nut
110	98-7769	4	Stud

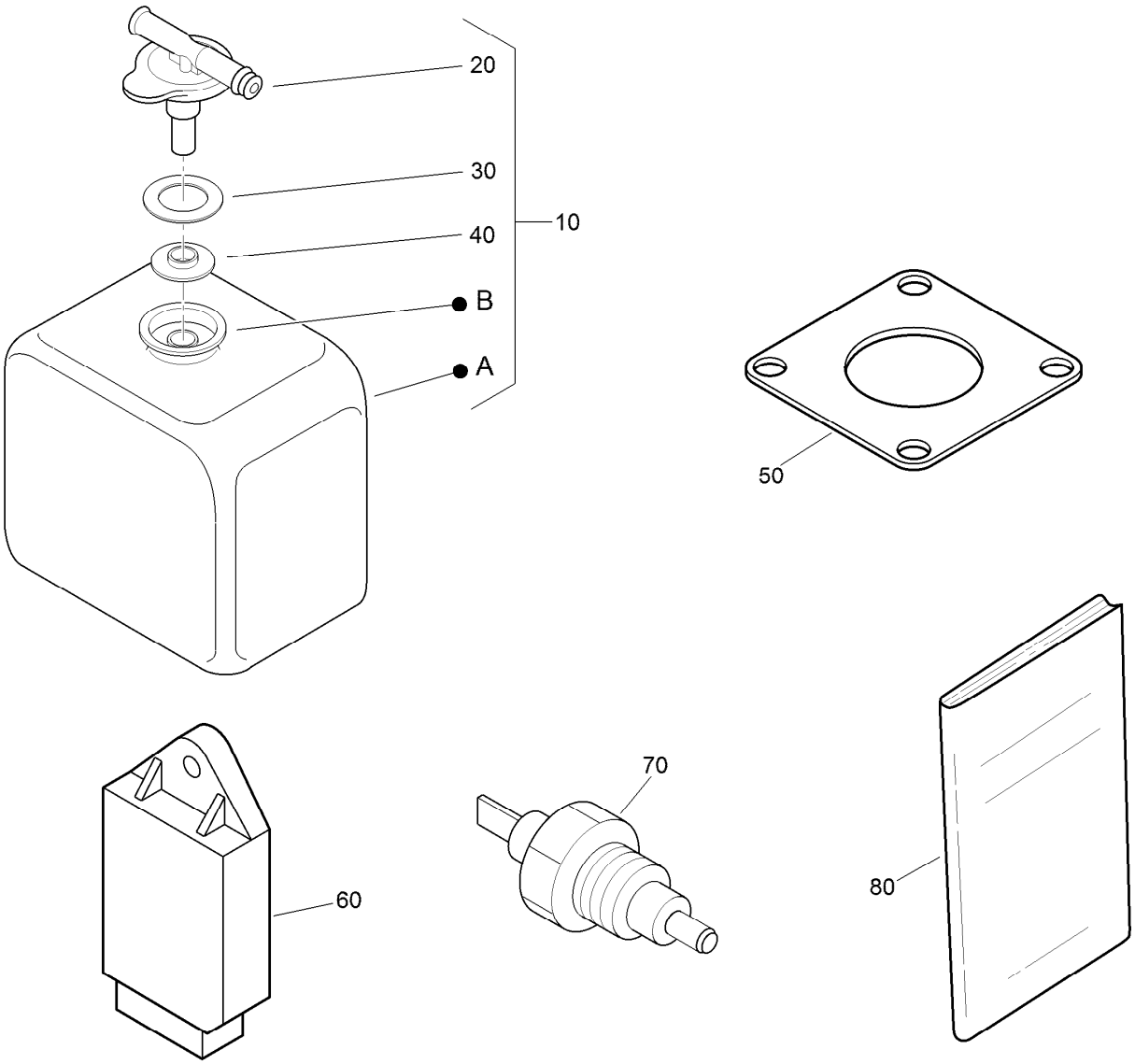

Miscellaneous Engine Parts

Ref.	*Part Number*	*Qty.*	*Description*
10	104-9318	1	Bottle-Overflow
20	115-4132	1	Cap
30	105-3755	1	Gasket
40	105-3756	1	Plate
50	99-8343	1	Gasket-Muffler
60	98-7611	1	Controller-Glow
70	106-7772	1	Thermoswitch
80	130-1543	1	Manual-Operator

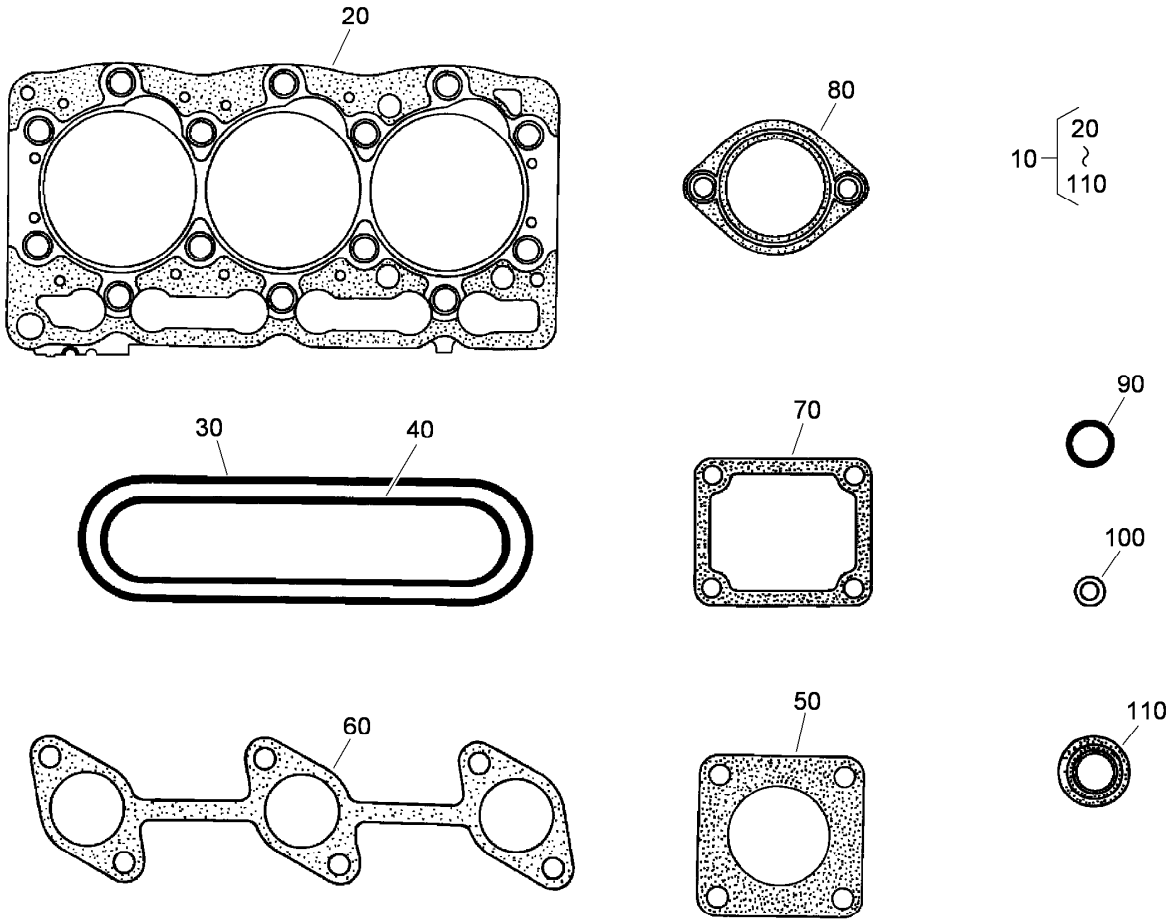

Upper Gasket Kit

Ref.	*Part Number*	*Qty.*	*Description*
10	107-7848	1	Upper Gasket Kit
20	108-6573	1	Gasket-Head, Cylinder
30	98-9615	1	Gasket-Cover, Head
40	98-9609	1	Gasket-Manifold, Inlet
50	99-8343	1	Gasket-Muffler
60	99-8327	1	Gasket-Manifold, Exhaust
70	98-9638	1	Gasket-Flange, Water
80	105-3748	1	Gasket-Thermostat
90	99-3446	2	O-Ring
100	98-9454	3	Gasket
110	99-8385	6	Seal-Stem, Valve

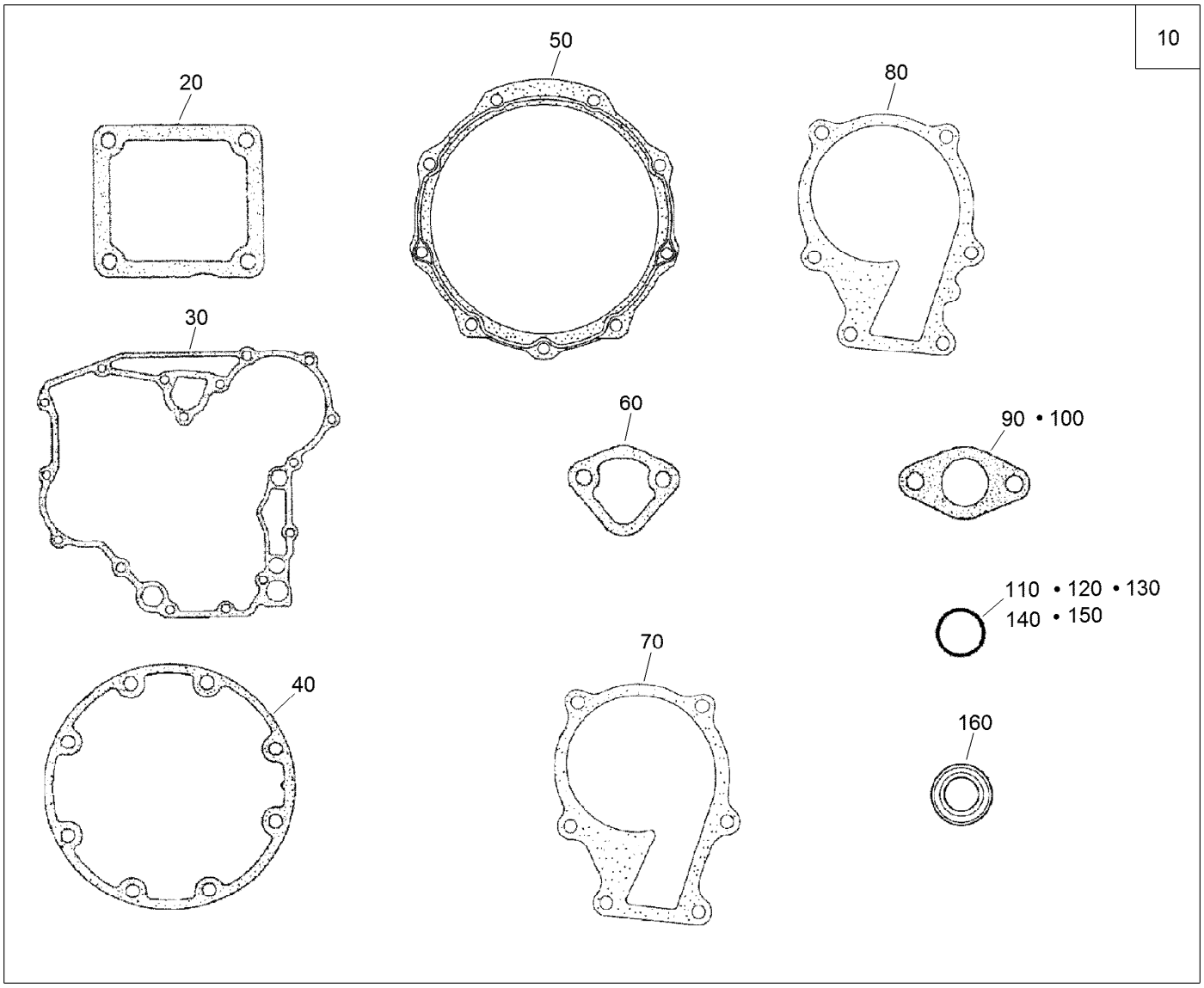

Lower Engine Gasket Kit

Ref.	Part Number	Qty.	Description
10	130-1364	1	Lower Gasket Kit
20	98-9637	1	Gasket
30	98-9633	1	Gasket-Case, Gear
40	127-0440	1	Gasket-Case, Bearing
50	112-7037	1	Gasket-Cover, Case
60	117-7562	1	Gasket-Pump, Fuel
70	98-9632	1	Gasket-Pump, Water
80	99-3454	1	Gasket-Pump, Water

Ref.	Part Number	Qty.	Description
90	98-9682	1	Gasket
100	98-9683	1	Gasket-Cover, Solenoid
110	105-3781	2	O-Ring
120	105-3777	2	O-Ring
130	105-3783	1	O-Ring
140	105-3776	1	O-Ring
150	105-3788	1	O-Ring
160	98-7601	1	Seal-Oil

Attachments and Accessories

For 03171 Reelmaster 3100-D Traction Unit With Sidewinder

Product Name	Model/Part
27in Lift Arm Kit	03172
32in Lift Arm Kit	03173
8-Blade 27in DPA Edge Series Cutting Unit	03189
11-Blade 27in DPA Edge Series Cutting Unit	03190
8-Blade 32in DPA Edge Series Cutting Unit	03191
RM3105 27in, 8bld Rr Es No Frt Roller Cu	03192
27in Verticutter Cutting Unit	03203
Operator Cooling Fan	03247
Switch Panel-Universal Sunshade	03248
Smooth Rear Tire	127-2796
Hi-Back Seat Cover	133-1308
Wheel Weight Kit	136-3315
Decal-Service, Japan	138-1190
Beacon Kit	138-2699
Sunshade Work Lights Kit	138-2700
Power Harness Kit	138-2993
Premium Seat Kit	30629
White Universal Sunshade	30669
Red Universal Sunshade	30671
Arm Rest Kit	30707
LED Light Kit	31696

Notes:

Notes:

Notes:

TORO®

Count on it.