Form No. 3465-107 Rev A

TORO®

Count on it.

Parts Catalog

Greensmaster® Flex™ 1021

Traction Unit

Model No. 04860—Serial No. 415206715 and Up

Register at www.Toro.com.
Original Instructions (EN)

CE

3465-107 A

Ordering Replacement Parts

To order replacement parts, please supply the part number, the quantity, and the description of each part desired.

Understanding Reference Numbers

Each identified part in an illustration has a reference number. The reference number for a part also appears in the parts list, along with other information about the part.

This catalog uses two special reference number formats, one to indicate parts in a service assembly and another to indicate the quantity of a given part in an illustration.

Service Assembly Reference Numbers

Parts in service assemblies have reference numbers in the form a:b. The a represents the reference number of the entire service assembly and the b represents a sequential number unique to each part within the service assembly.

For example, a wheel assembly might be identified by reference number 6, the tire by 6:1, the valve by 6:2, and the wheel by 6:3. When you order the assembly identified by reference number 6, you receive all parts identified by reference numbers 6:1,6:2, and 6:3. However, you may also order any part individually. Reference numbers of this type appear in illustration and in parts lists.

Reference Numbers Indicating Quantity

In an illustration, if a reference number indicates more than one part, the reference number has the form nX y. The n represents the quantity of the part, the X is the multiplication symbol, and the y represents the reference number.

For example, in an illustration, the reference number 2X 37 means that two of the parts identified by reference number 37 are indicated.

Contents

Frame and Handle Mount Assembly 4
Drum Drive Assembly 5
Drum Drive Replacement Kit Assembly No. 140-9329. 6
Drum Drive Gearbox Assembly 7
Drive Shaft and Reel Components Assembly 8
Transmission and Engine Assembly 9
Transmission Gearbox Assembly No. 140-9324 Transmission Case Assembly 11
Transmission Gearbox Assembly No. 140-9324 Reel Drive Assembly 12
Transmission Gearbox Assembly No. 140-9324 Traction Drive Assembly 13
Differential Assembly No. 132-4555 14
Engine Assembly No. 147-2328 15
Flex Frame and Grass Basket Assembly 16
Grass Basket Assembly No. 125-3500. 17
Reel Controls and Covers Assembly. 18
Upper Receiver Assembly No. 147-2288 19
Upper Handle Assembly 20
Traction Bail Assembly 21
Miscellaneous Parts Assembly 22
Attachments and Accessories 23

© 2023—The Toro® Company
8111 Lyndale Avenue South
Bloomington, MN 55420

Contact us at www.Toro.com.
Printed in the USA.
All Rights Reserved

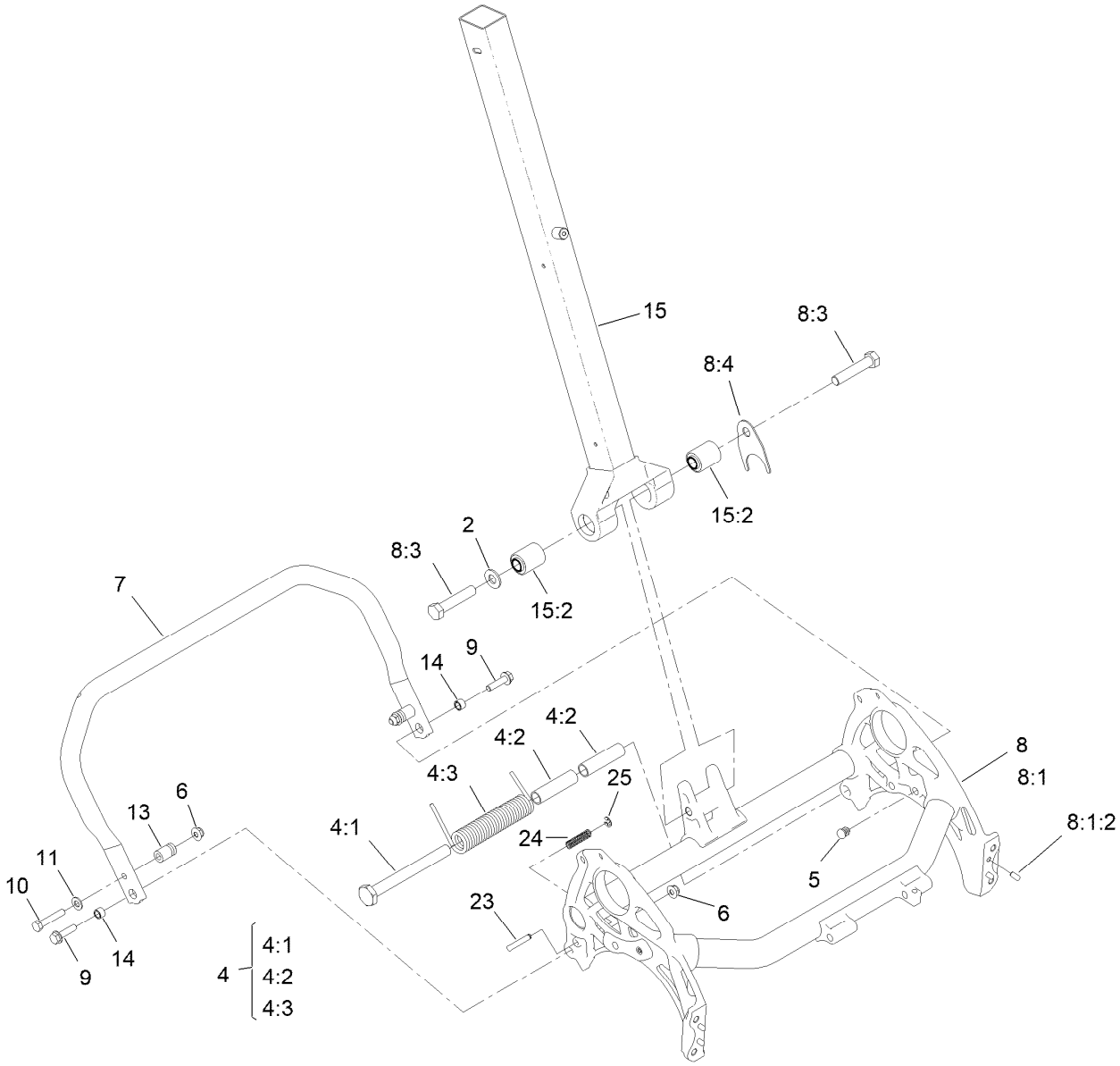

Frame and Handle Mount Assembly

Ref.	Part Number	Qty.	Description
2	3256-26	1	Washer-Flat
4	147-2290	1	Kit-Kickstand Spring Replacement
4:1	147-2285	1	Pin-Mount, Spring
4:2	147-2286	2	Sleeve, Spring-Mount
4:3	147-2268	1	Spring-Torsion, LH
5	139-4326	2	Plug-Plastic
6	119-4041	3	Nut-HF
7	147-2272	1	Kickstand, 21 Inch
8	140-9344	1	Frame ASM, 21"
8:1		1	Frame ASM, 21" ●
8:1:2	95-0715	4	Pin-Dowel

Ref.	Part Number	Qty.	Description
8:3	325-10	2	Screw-HH
8:4	140-9333	1	Washer, Anti-Rotation
9	112-6913	2	Screw-HHF
10	322-9	2	Screw-HH
11	3256-23	2	Washer-Plain
13	65-7900	2	Retainer-Spring
14	65-7910	2	Spacer
15	137-0292	1	Lower Handle ASM
15:2	138-1469	2	Bushing-Straight
23	139-7431	1	Pin-Kickstand, Lock
24	73-3450	1	Spring-Compression
25	32151-86	1	E-Ring

● Not serviced separately

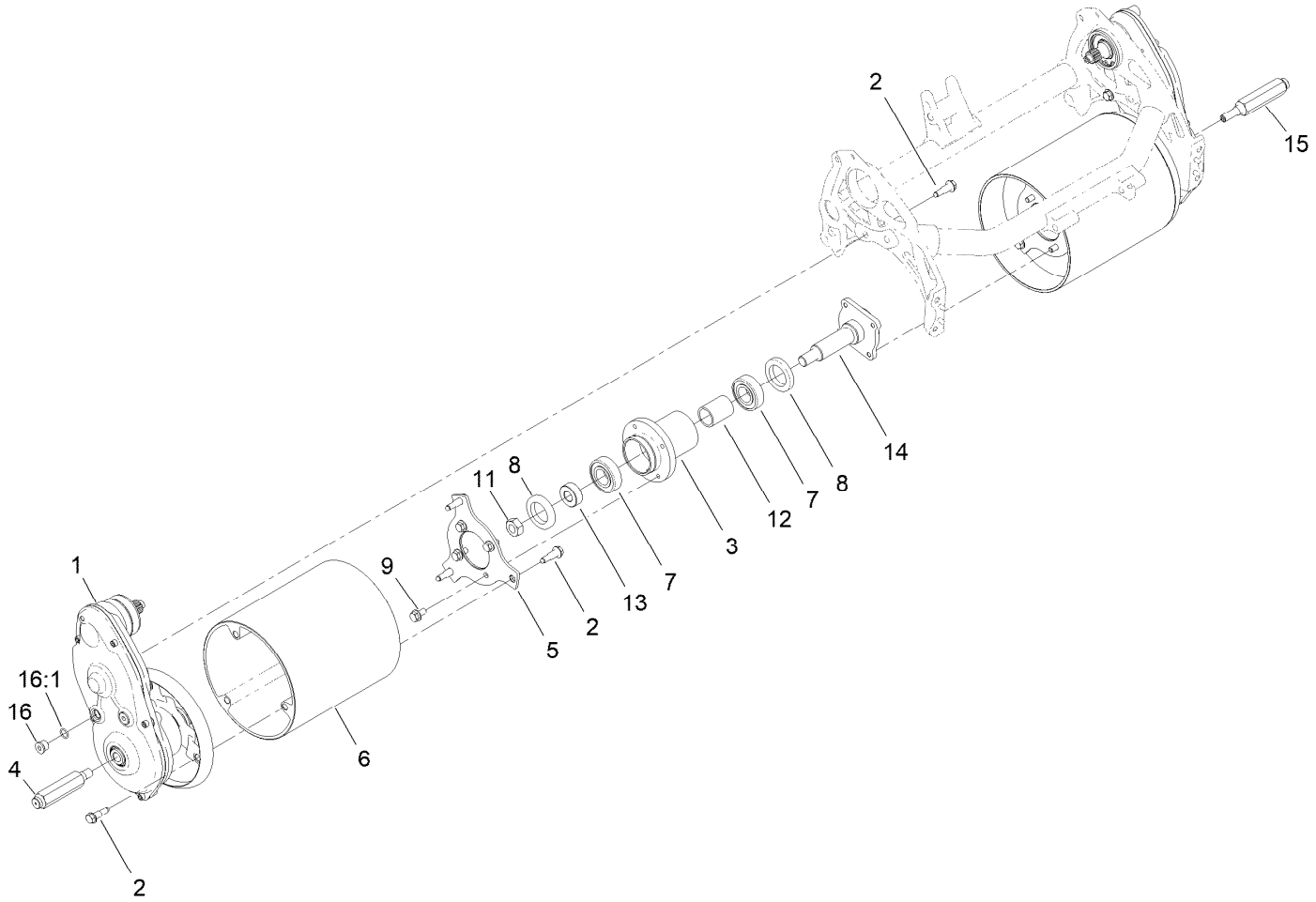

Drum Drive Assembly

Ref.	Part Number	Qty.	Description
1	140-9329	1	Kit-Drum Drive Replacement
2	132-4607	14	Bolt-Shoulder, Flange
3	132-6971	1	Hub-Drum
4	132-4605	1	Shaft-Hex, RH
5	147-2257	2	Plate-Drum, Hub
6	139-4362	2	Drum-Traction, Flex
7	251-82	2	Bearing-Ball
8	253-159	2	Seal

Ref.	Part Number	Qty.	Description
9	114-7728	8	Screw-HF
11	3296-33	1	Nut-Lock, NI
12	65-6520	1	Spacer
13	65-6530	1	Spacer
14	94-5850	1	Spindle-Drum
15	132-4606	1	Shaft-Hex, LH
16	353-989	4	Plug-Hex, Hollow
16:1	237-42	1	O-Ring

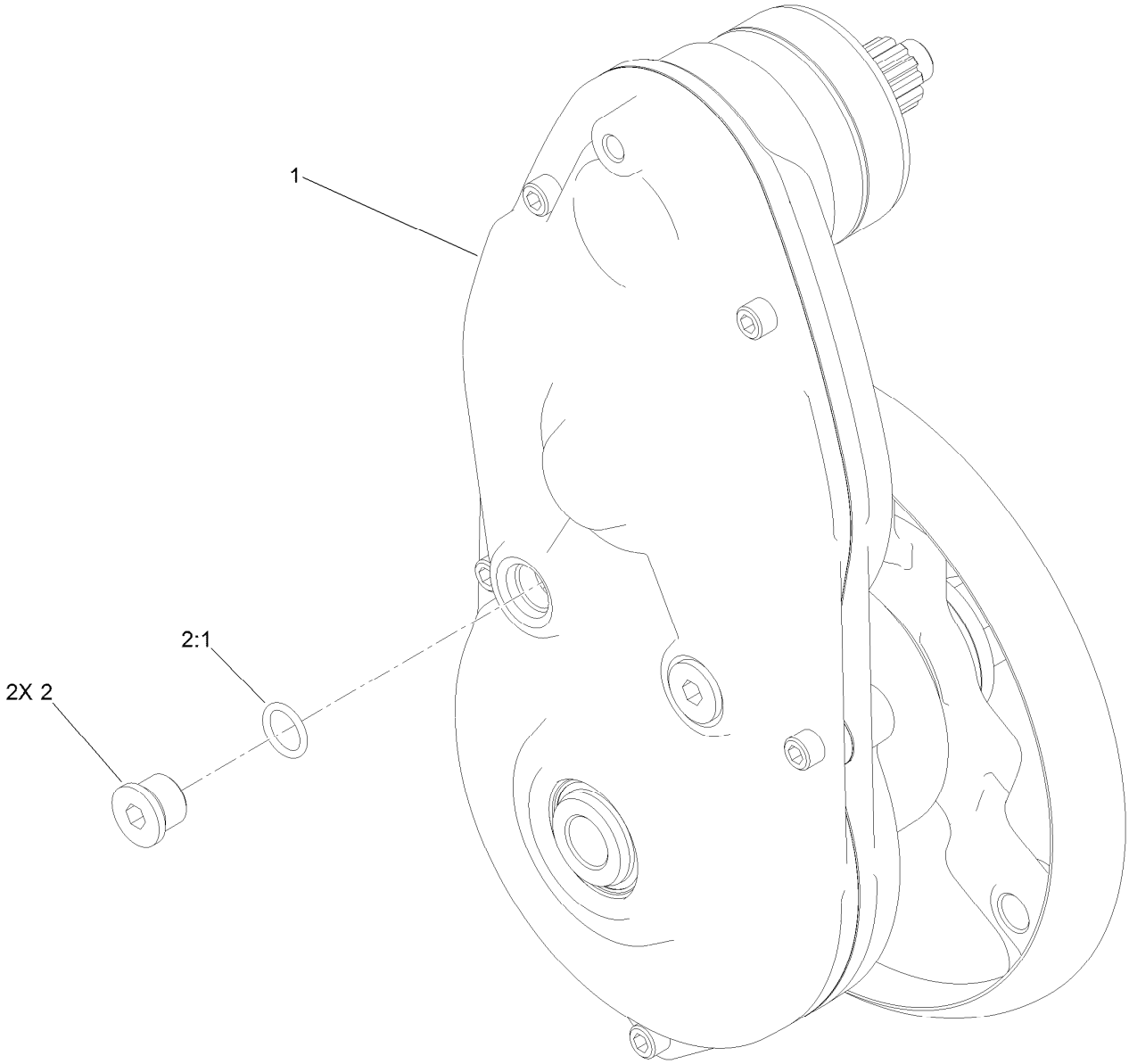

Drum Drive Replacement Kit Assembly No. 140-9329

Ref.	*Part Number*	*Qty.*	*Description*
1		1	Drum Drive Gear Box ASM ●
2	353-989	2	Plug-Hex, Hollow
2:1	237-42	1	O-Ring

● Not serviced separately

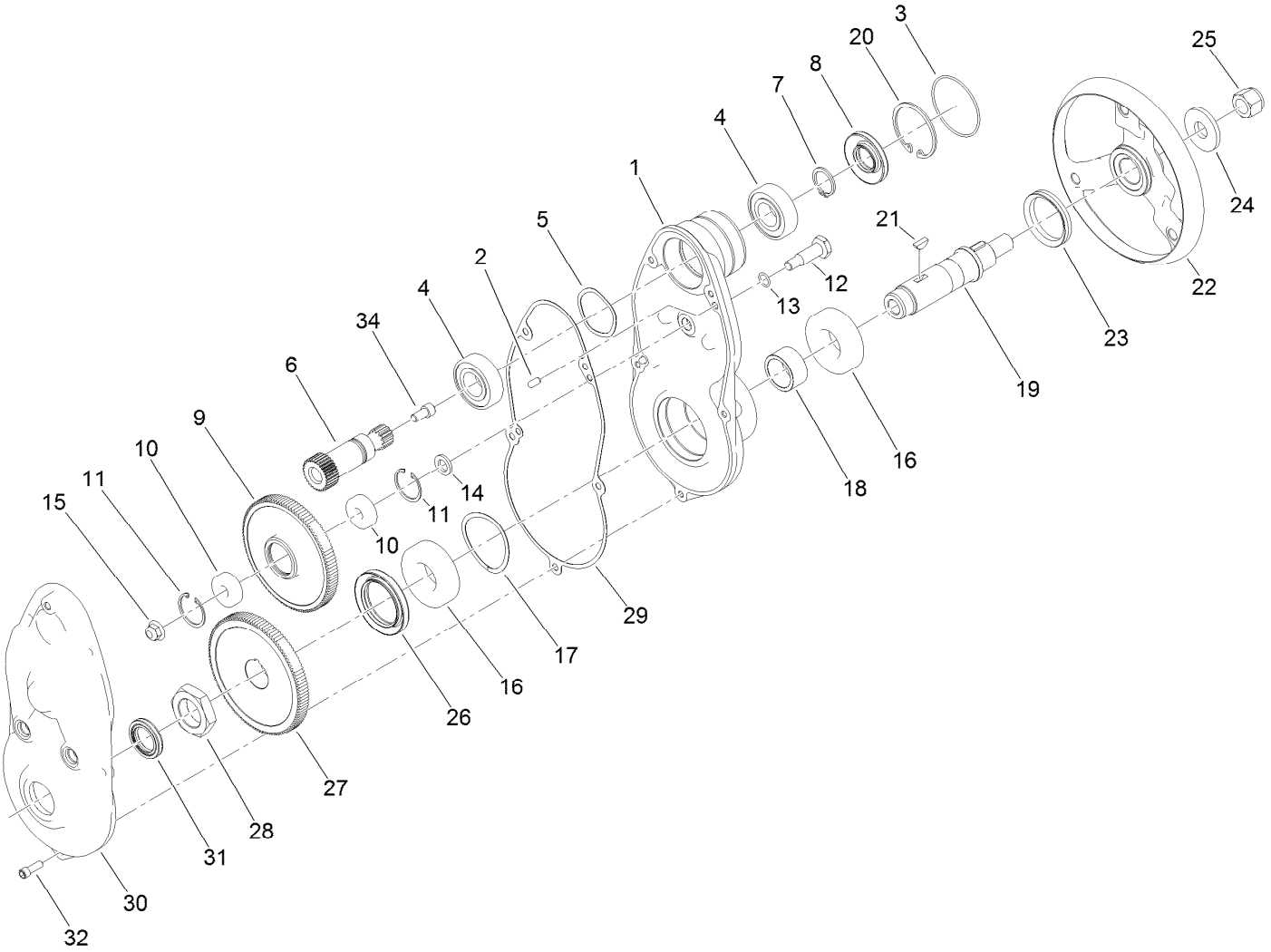

Drum Drive Gearbox Assembly

Ref.	Part Number	Qty.	Description
1	137-0282	1	Housing-Drive, Drum
2	133-4591	2	Pin-Dowel
3	133-9082	1	O-Ring
4	251-82	2	Bearing-Ball
5	3290-485	1	Washer-Wave
6	132-4565	1	Gear-Spur, 30T
7	138-1507	1	Ring-Retaining, EXT (25MM)
8	138-1491	1	Seal-Oil
9	137-0274	1	Gear-Spur, 108T
10	49-2410	2	Bearing-Ball
11	138-1506	2	Ring-Retaining, Int (32MM)
12	133-4558	1	Pin-Bearing, Short
13	80-8460	1	O-Ring
14	133-4553	1	Spacer-Bearing
15	119-4042	1	Nut-HF, NI
16	251-312	2	Bearing-Ball

Ref.	Part Number	Qty.	Description
17	115-5258	1	Spring-Wire, Flat
18	132-4568	1	Spacer
19	133-4562	1	Shaft-Drum, Drive
20	138-1480	1	Ring-Retaining, Int (52MM)
21	138-1504	2	Key-Woodruff, 5MM
22	133-9244	1	Hub-Drum, Outer
23	253-161	1	Seal-V-Ring
24	104-9216	1	Washer-Hardened
25	126-3841	1	Nut-Hex, NI
26	138-1490	1	Seal-Oil
27	137-0275	1	Gear-Spur, 114T
28	133-9078	1	Nut-Hex
29	132-4569	1	Gasket-Drive, Drum
30	137-0284	1	Cover-Drive, Drum
31	133-4559	1	Seal-Oil
32	140-9233	5	Screw-HSH
34	3274-12	1	Screw-HSH

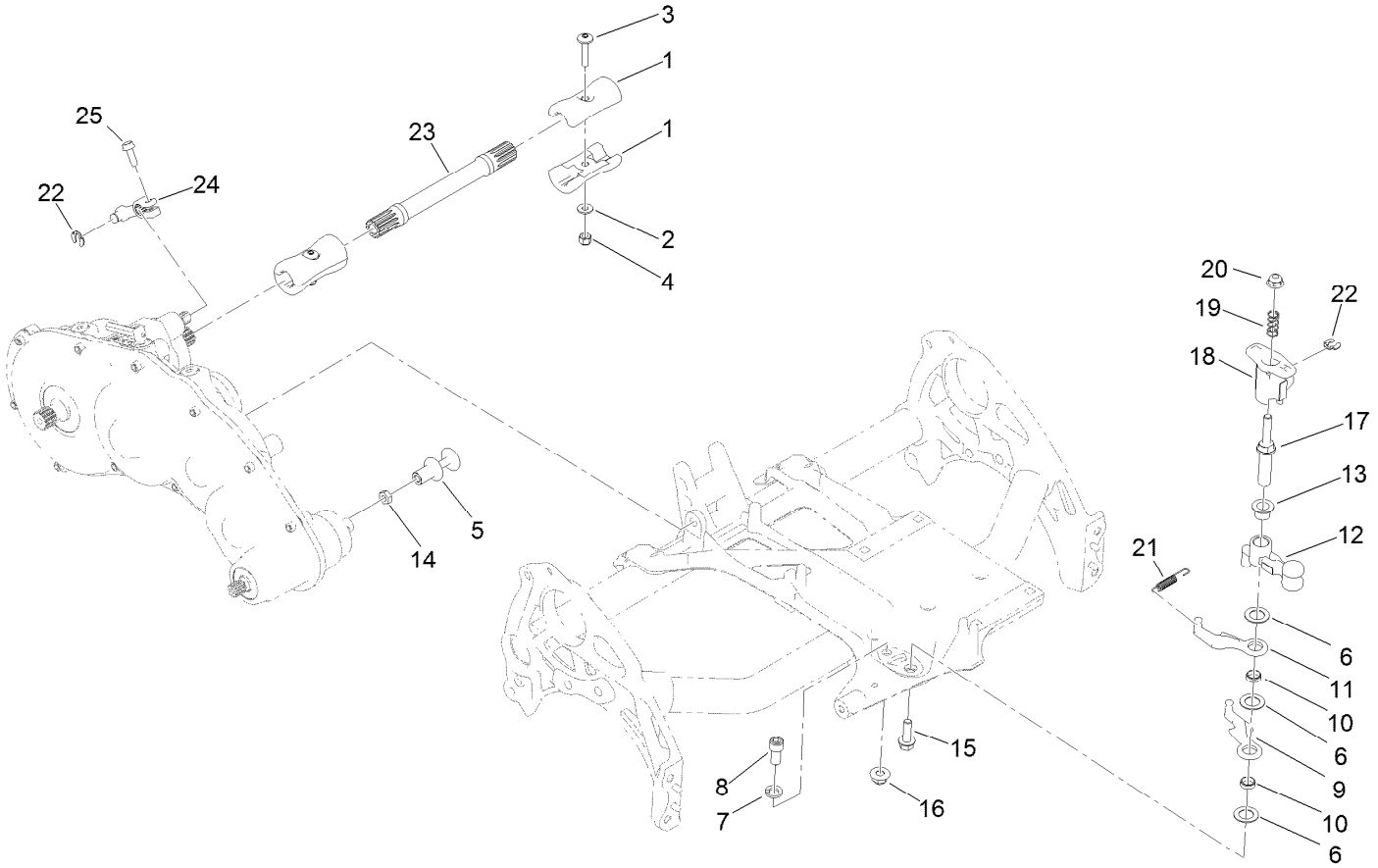

Drive Shaft and Reel Components Assembly

Ref.	Part Number	Qty.	Description
1	133-9100	4	Coupler-Splined, 4 Tooth
2	119-8952	2	Washer
3	126-8232	2	Screw-Truss Hex Skt
4	3296-42	2	Nut-Lock, NI
5	133-9207	1	Adapter-Slider
6	139-7362	3	Washer-Poly
7	3253-21	1	Washer-Lock
8	131-8573	1	Screw-HSH
9	138-1523	1	Reel Lever
10	133-9226	2	Bushing-Straight
11	138-1524	1	Lever-Reel
12	133-9206	1	Bellcrank-Reel
13	125-5239	1	Bushing-Flange

Ref.	Part Number	Qty.	Description
14	120-9638	1	Nut-Jam
15	115-5142	1	Screw-HHF
16	119-4042	1	Nut-HF, NI
17	137-0298	1	Shaft-Selector, Reel
18	137-0299	1	Hub-Selector, Reel
19	117-1031	1	Spring-Compression
20	119-4041	1	Nut-HF
21	119-4609	1	Spring-Extension
22	32151-47	2	Ring-Retaining
23	133-9208	1	Shaft-Drive
24	133-9117	1	Lever-Brake, Cable
25	131-6150	1	Screw-HWHTF

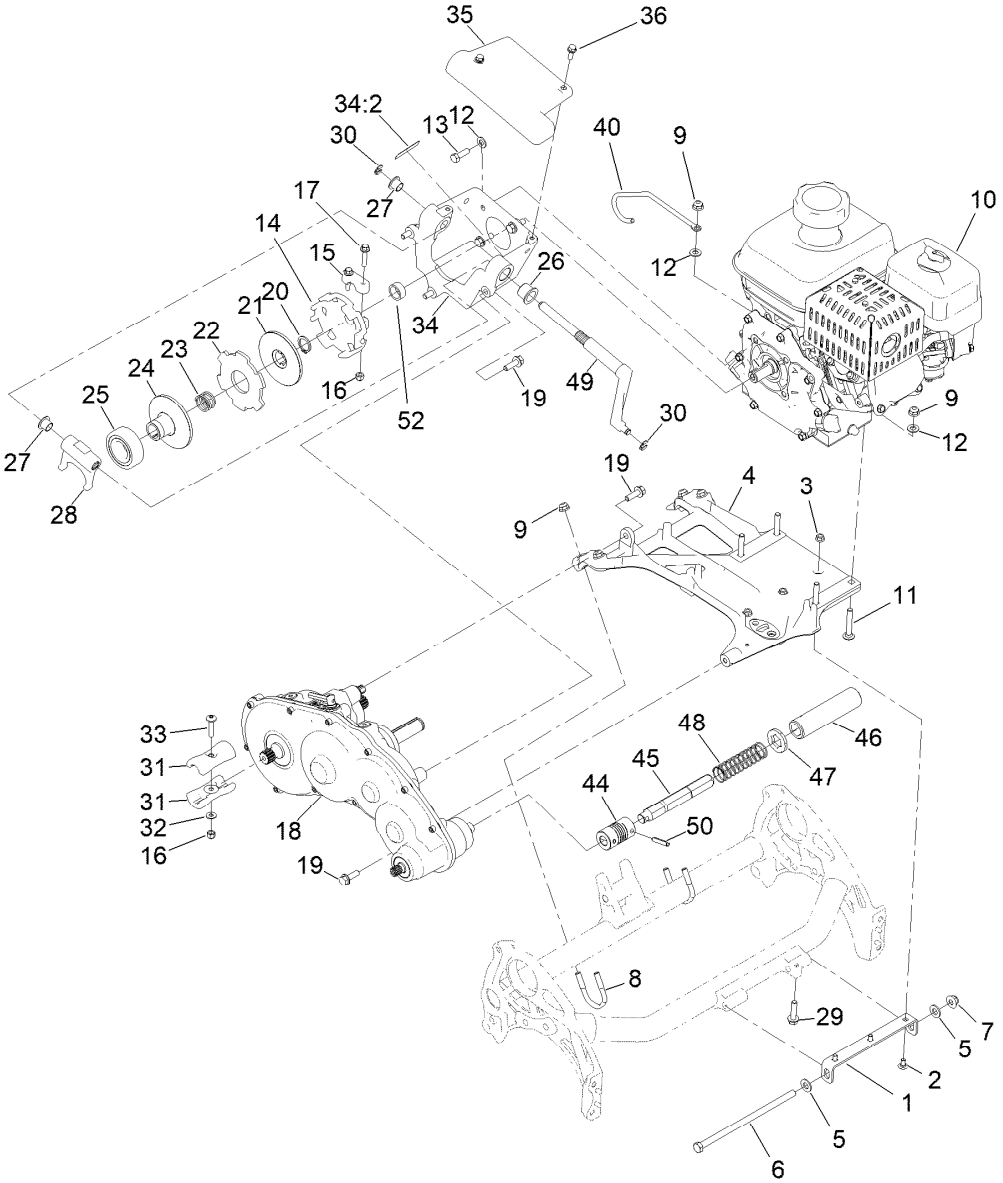

Transmission and Engine Assembly

Ref.	Part Number	Qty.	Description
1	138-1623-01	1	Bracket-Mount, Engine
2	116-5611	3	Bolt-Carriage 1/4-20 X 1/2 Short Neck
3	32128-10	3	Nut-Lock, HHF
4	138-5517	1	Base-Engine
5	3256-24	2	Washer-Plain
6	323-30	1	Screw-HH
7	119-4042	1	Nut-HF, NI
8	137-0301	2	Clamp-Tube
9	119-4041	8	Nut-HF
10	147-2328	1	Engine ASM, Honda ●
11	3230-6	4	Bolt-CARR
12	3256-23	8	Washer-Plain
13	131-5919	4	Screw-HH, Patch
14	138-3542	1	Hub-Clutch, External
15	138-5522	1	Clamp-Hub, Clutch
16	3296-42	3	Nut-Lock, NI
17	127-8639	2	Screw-HHF

Ref.	Part Number	Qty.	Description
18	140-9324	1	Kit-Transmission Replacement
19	115-5142	5	Screw-HHF
20	32151-33	1	Ring-Retaining, EXT
21	133-9095	1	Disc-Clutch
22	133-9094	1	Plate-Friction
23	133-9123	1	Spring-Compression, Clutch
24	138-1508	1	Disc-Clutch, Slider
25	138-1505	1	Bearing-Sealed, Self Aligning
26	132-4089	1	Bushing
27	125-5239	2	Bushing-Flange
28	138-3548	1	Fork-Clutch
29	112-6913	1	Screw-HHF
30	32151-47	2	Ring-Retaining
31	133-9100	2	Coupler-Splined, 4 Tooth
32	119-8952	1	Washer
33	126-8232	1	Screw-Truss Hex Skt

● Obtain parts from www.honda-engines.com

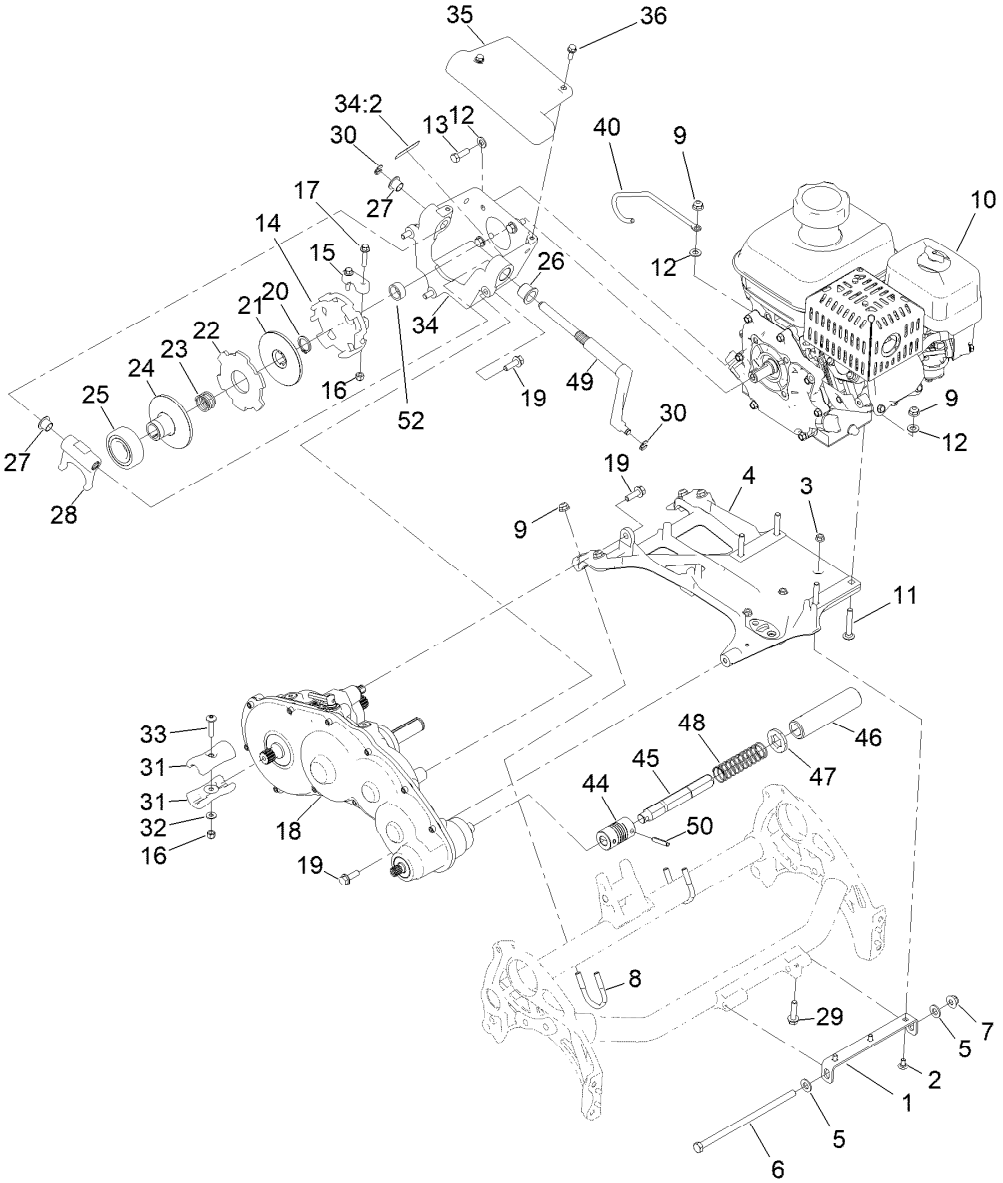

Transmission and Engine Assembly (continued)

Ref.	Part Number	Qty.	Description
34	139-4301	1	Bell Housing ASM
34:2	120-9570	1	Decal-Warning
35	138-5545	1	Cover-Clutch
36	119-1138	2	Screw-HHF
40	139-4309	1	Guide-Cable
44	133-2341	1	Coupling-Helical
45	139-7379	1	Shaft-Coupler

Ref.	Part Number	Qty.	Description
46	110-2390	1	Tube-Hex
47	139-7391	1	Collar-Lock
48	139-7390	1	Spring-Compression
49	138-3549	1	Shaft-Fork
50	125-3542	2	Pin-Roll
52	147-2265	1	Spacer-Clutch

● Obtain parts from www.honda-engines.com

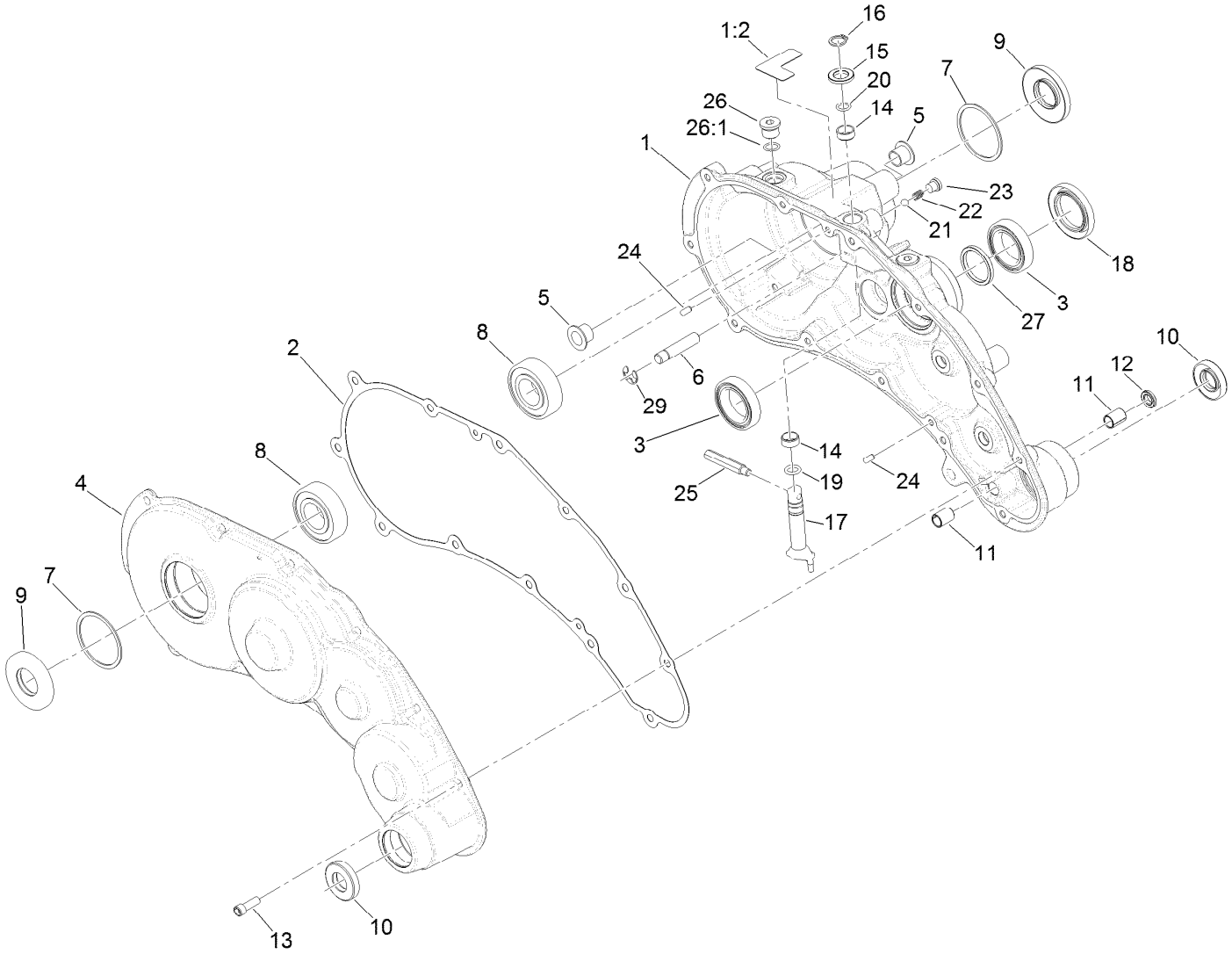

Transmission Gearbox Assembly No. 140-9324
Transmission Case Assembly

Ref.	Part Number	Qty.	Description
1	139-4306	1	Transmission Housing ASM
1:2	138-1644	1	Decal-Release, Traction
2	132-4551	1	Gasket-Transmission
3	121-9281	2	Bearing-Ball
4	138-1603	1	Transmission Cover ASM
5	125-5239	2	Bushing-Flange
6	133-9122	1	Pin-Mount, Brake
7	32151-92	2	Ring-Retaining
8	251-82	2	Bearing-Ball
9	133-9075	2	Seal-Oil
10	130-9463	2	Seal-Oil
11	131-3038	2	Bushing-Sleeve
12	131-3126	1	Seal-Oil
13	140-9233	12	Screw-HSH
14	121-4738	2	Bushing-Straight

Ref.	Part Number	Qty.	Description
15	108-5059	1	Spacer-Bushing
16	32151-61	1	Ring-Retaining
17	130-6816	1	Shaft-Selector, Traction
18	140-9325	1	Seal-Grease, High Temp
19	131-1879	1	O-Ring Seal
20	237-22	1	O-Ring
21	105-2442	1	Ball-Detent
22	105-2443	1	Spring-Detent
23	131-1825	2	Plug-ORB
24	121-9249	2	Pin-Dowel
25	133-9149	1	Pin-Groomer
26	353-989	2	Plug-Hex, Hollow
26:1	237-42	1	O-Ring
27	138-1496	1	Spacer
29	105-7004	1	E-Ring

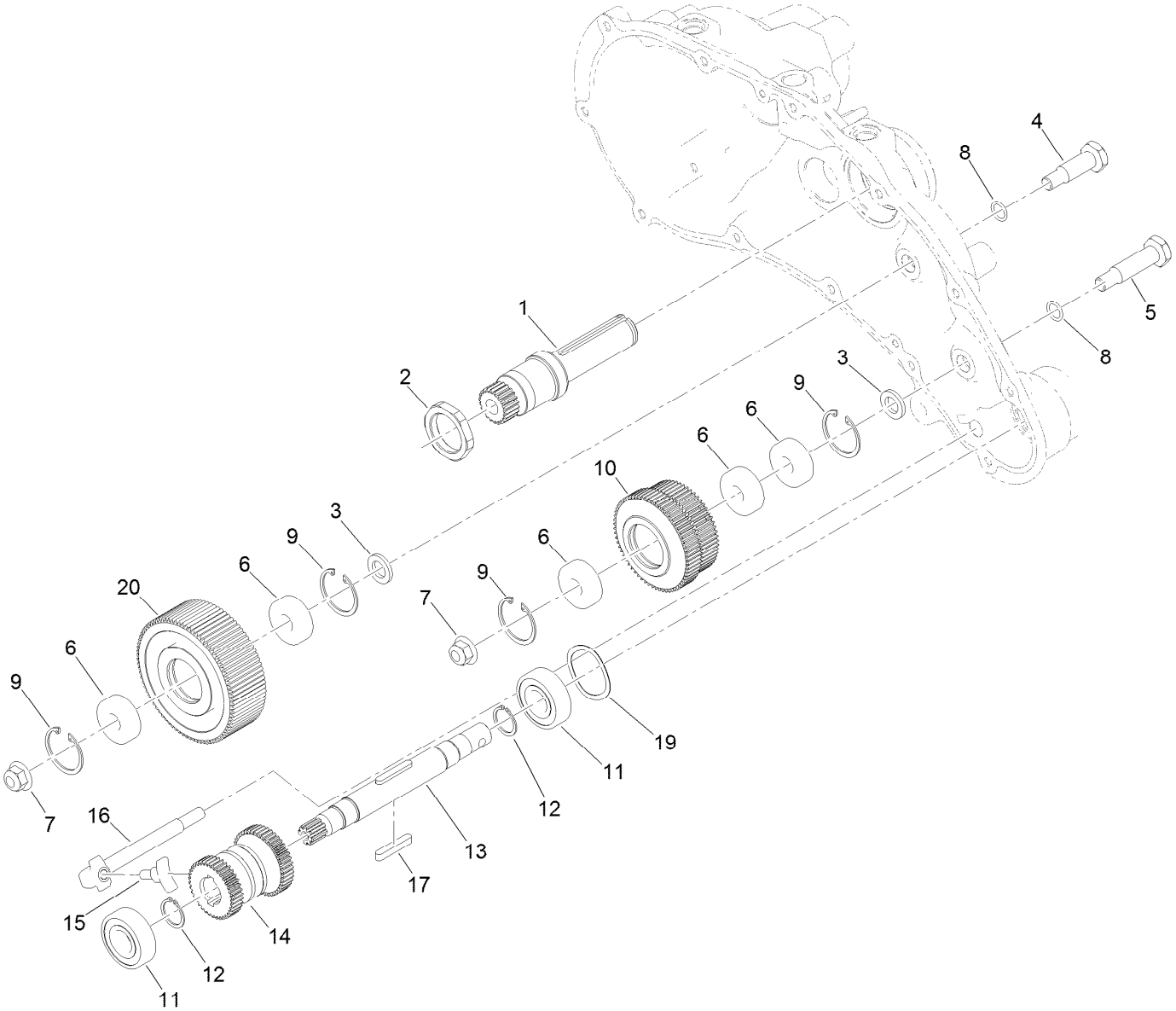

Transmission Gearbox Assembly No. 140-9324
Reel Drive Assembly

Ref.	Part Number	Qty.	Description
1	138-1509	1	Shaft-Input, 22T
2	138-1495	1	Nut-Lock, Thin
3	133-4553	2	Spacer-Bearing
4	133-4558	1	Pin-Bearing, Short
5	133-4557	1	Pin-Bearing, Long
6	49-2410	5	Bearing-Ball
7	104-8301	2	Nut-HF, NI
8	80-8460	2	O-Ring
9	138-1506	4	Ring-Retaining, Int (32MM)
10	137-0272	1	Gear-Spur, 60T/65T

Ref.	Part Number	Qty.	Description
11	38-7820	2	Bearing-Ball
12	138-1629	2	Ring-Retaining, EXT (17MM)
13	139-4359	1	Shaft-Drive, Reel
14	130-6834	1	Gear-Spur, Slider
15	133-9120	1	Shoe-Clutch, Reel
16	133-9121	1	Actuator-Clutch, Reel
17	103-2739	2	Key
19	131-3170	1	Spring-Wave
20	137-0273	1	Gear-Spur, 85T

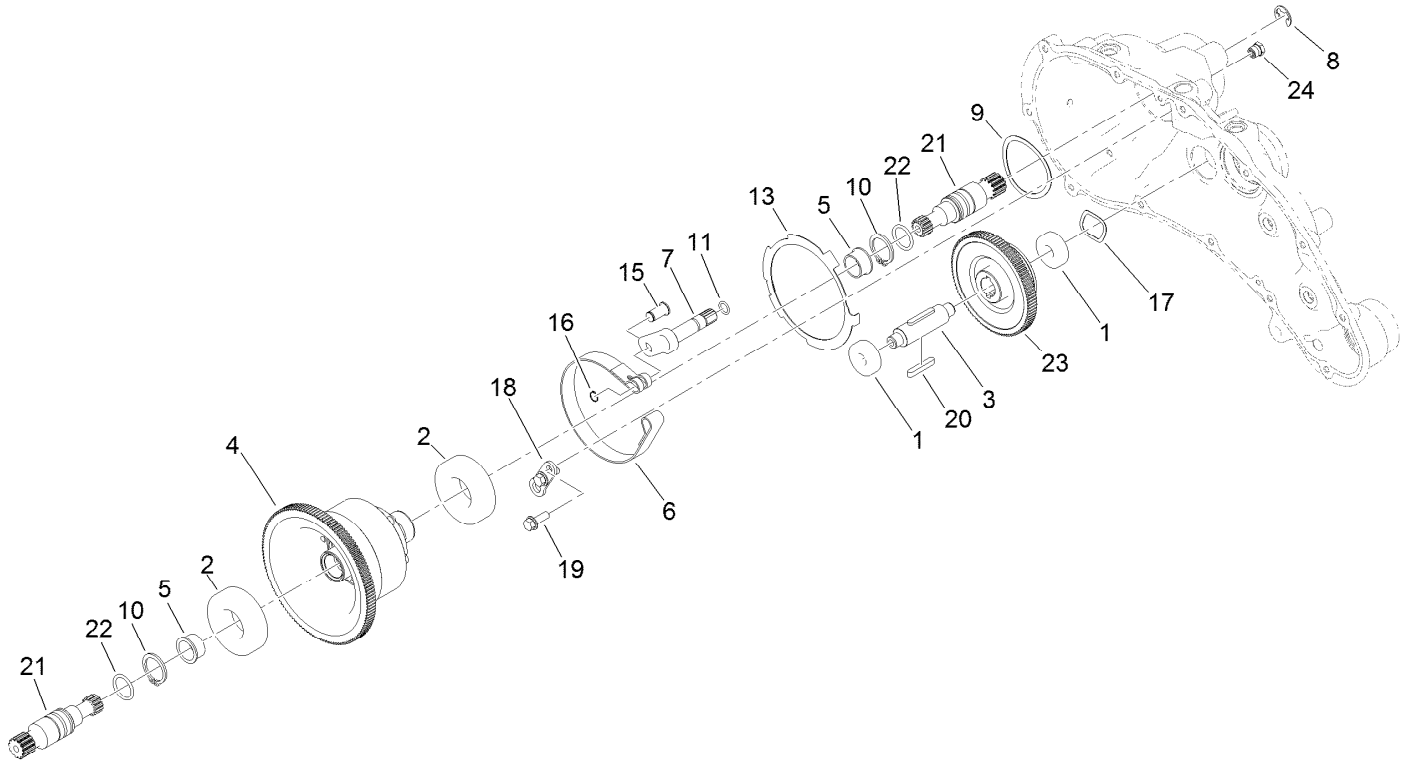

Transmission Gearbox Assembly No. 140-9324
Traction Drive Assembly

Ref.	Part Number	Qty.	Description
1	49-2410	2	Bearing-Ball
2	251-312	2	Bearing-Ball
3	137-0236	1	Shaft-Slider, Neutral
4	132-4555	1	Differential ASM
5	256-252	2	Bearing-Flange
6	140-9277	1	Band-Brake
7	132-4550	1	Lever-Brake
8	32120-47	1	Ring-Retaining, External
9	115-5258	1	Spring-Wire, Flat
10	32151-36	2	Ring-Retaining
11	237-22	1	O-Ring

Ref.	Part Number	Qty.	Description
13	140-9236	1	Plate-Retainer, Brake
15	120-9687	1	Pin-Clevis, Brake
16	32120-46	1	Ring-Retaining
17	112-5163	1	Washer-Wave
18	140-9279	1	Plate-Retainer, Pin
19	119-1138	2	Screw-HHF
20	103-2739	2	Key
21	130-6841	2	Shaft-Differential
22	237-159	2	O-Ring
23	137-0276	1	Gear-Spur, Neutral (93T)
24	133-4589	1	Fitting-Plug

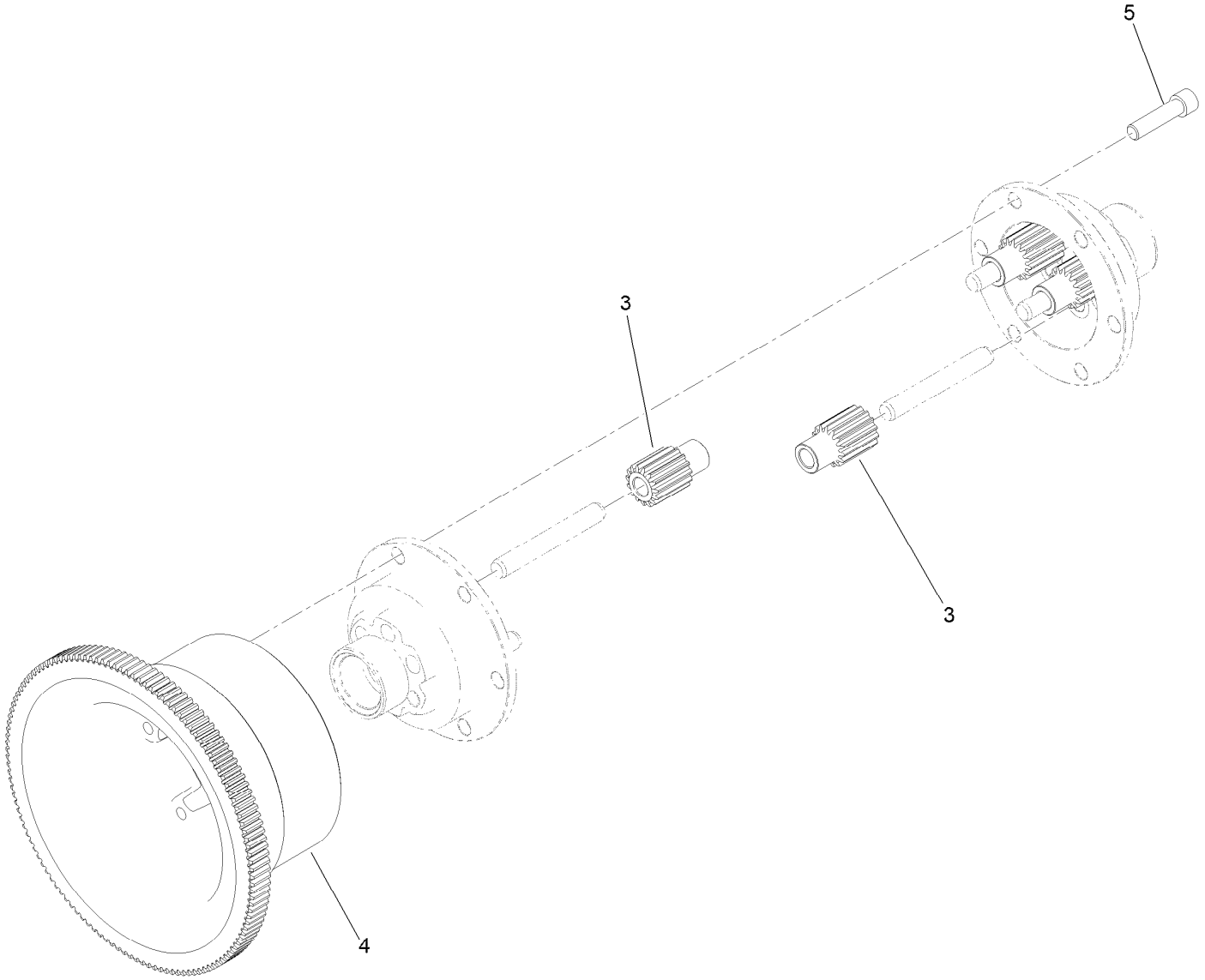

Differential Assembly No. 132-4555

Ref.	*Part Number*	*Qty.*	*Description*
3	130-6840	6	Gear-Spur, Differential
4	137-0294	1	Gear-Differential, 127T
5	3274-26	6	Screw-HSH

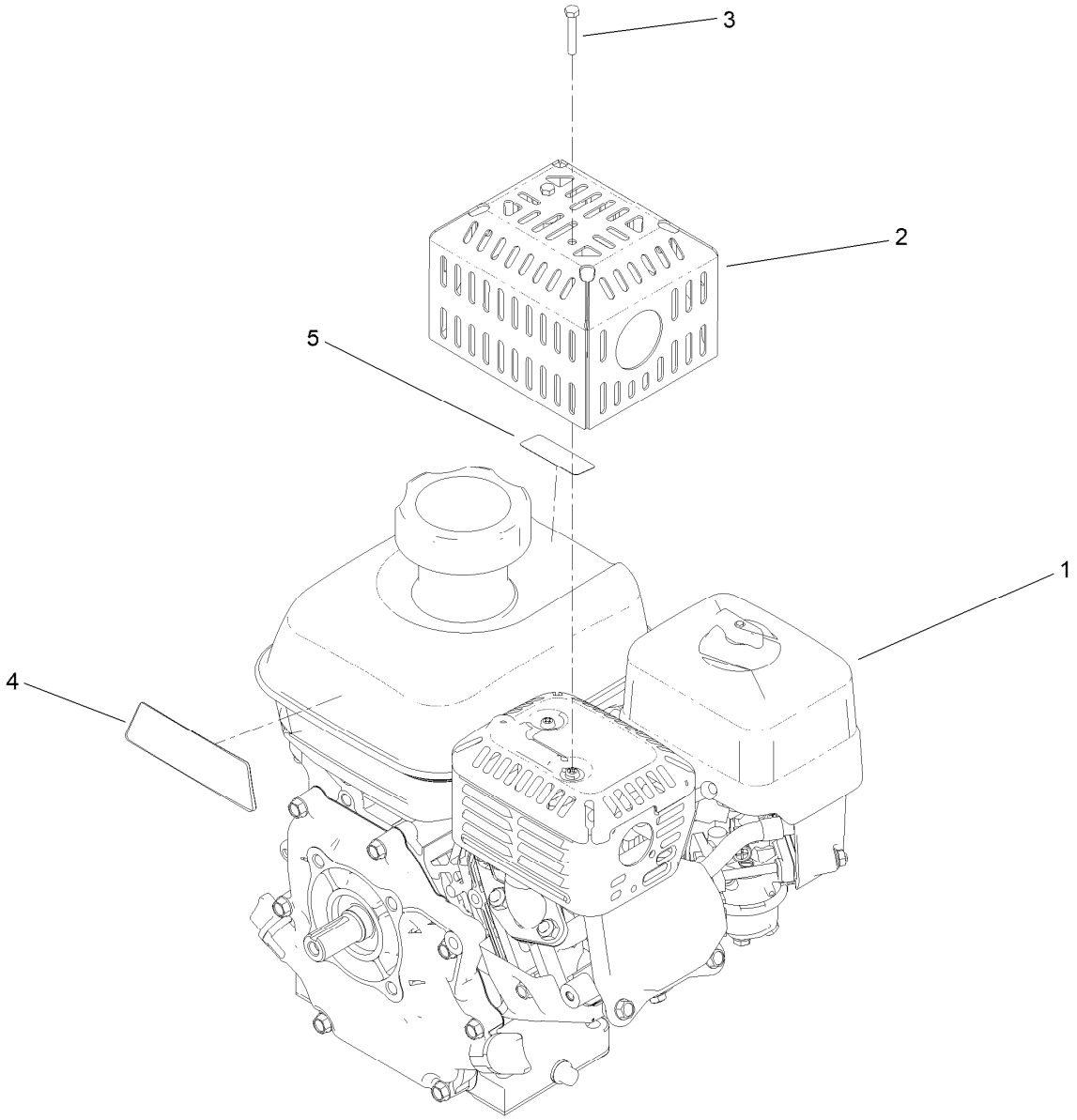

Engine Assembly No. 147-2328

Ref.	Part Number	Qty.	Description
1		1	Engine ASM, Honda ●■
2	138-2128-03	1	Guard-Muffler
3	87-5150	2	Screw-HH
4	138-2138	1	Decal-Warning, Engine
5	130-8322	1	Decal-Warning, Ethanol

● Not serviced separately

■ Obtain parts from www.honda-engines.com

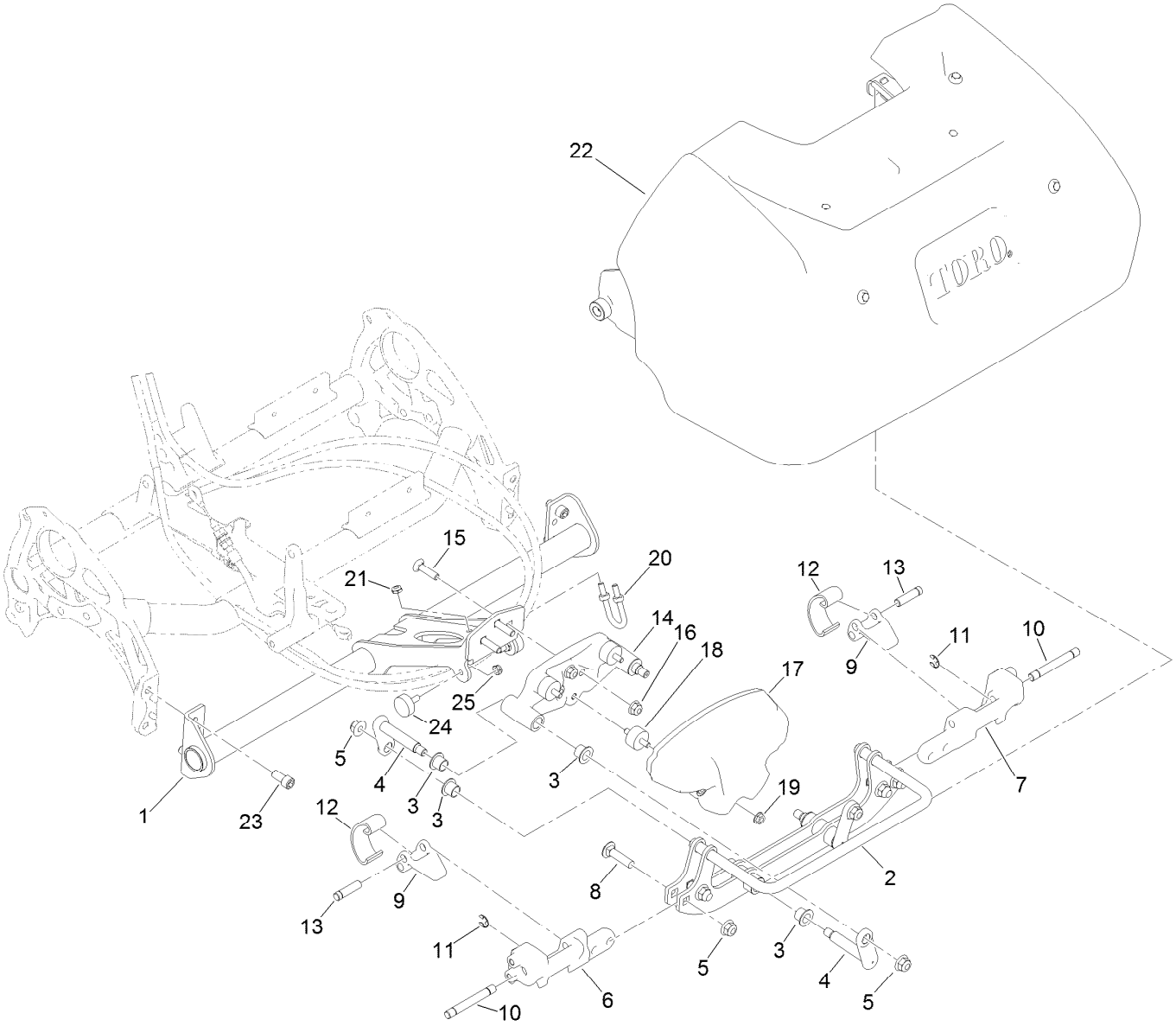

Flex Frame and Grass Basket Assembly

Ref.	Part Number	Qty.	Description
1	140-9254-01	1	Flex Frame, Welded [red]
2	139-7435-01	1	Roll Frame ASM, Welded [red]
3	125-5239	8	Bushing-Flange
4	140-6437	4	Link Flex (Mach)
5	104-8301	8	Nut-HF, NI
6	139-7372	1	Hub-End, RH
7	139-7374	1	Hub-End, LH
8	3231-4	4	Screw-CARR
9	114-8047	2	Lever
10	139-7380	2	Pin-Pivot, Latch
11	32120-18	2	E-Ring
12	114-8048	2	Spring
13	114-8049	2	Pin-Pivot
14	139-7439	1	Frame-Link
15	99-6005	3	Bolt-Carriage
16	104-8300	3	Nut-HF, NI
17	140-3399-01	1	Weight-Tmd [red]
18	140-3356	3	Isolator-Tmd
19	32128-14	3	Nut-HF
20	01-170-0040	1	U-Bolt
21	3296-56	2	Nut-Lock, NI
22	125-3500	1	Grass Basket ASM
23	131-8573	4	Screw-HSH
24	138-2662	2	Bumper-Rubber
25	3296-56	2	Nut-Lock, NI

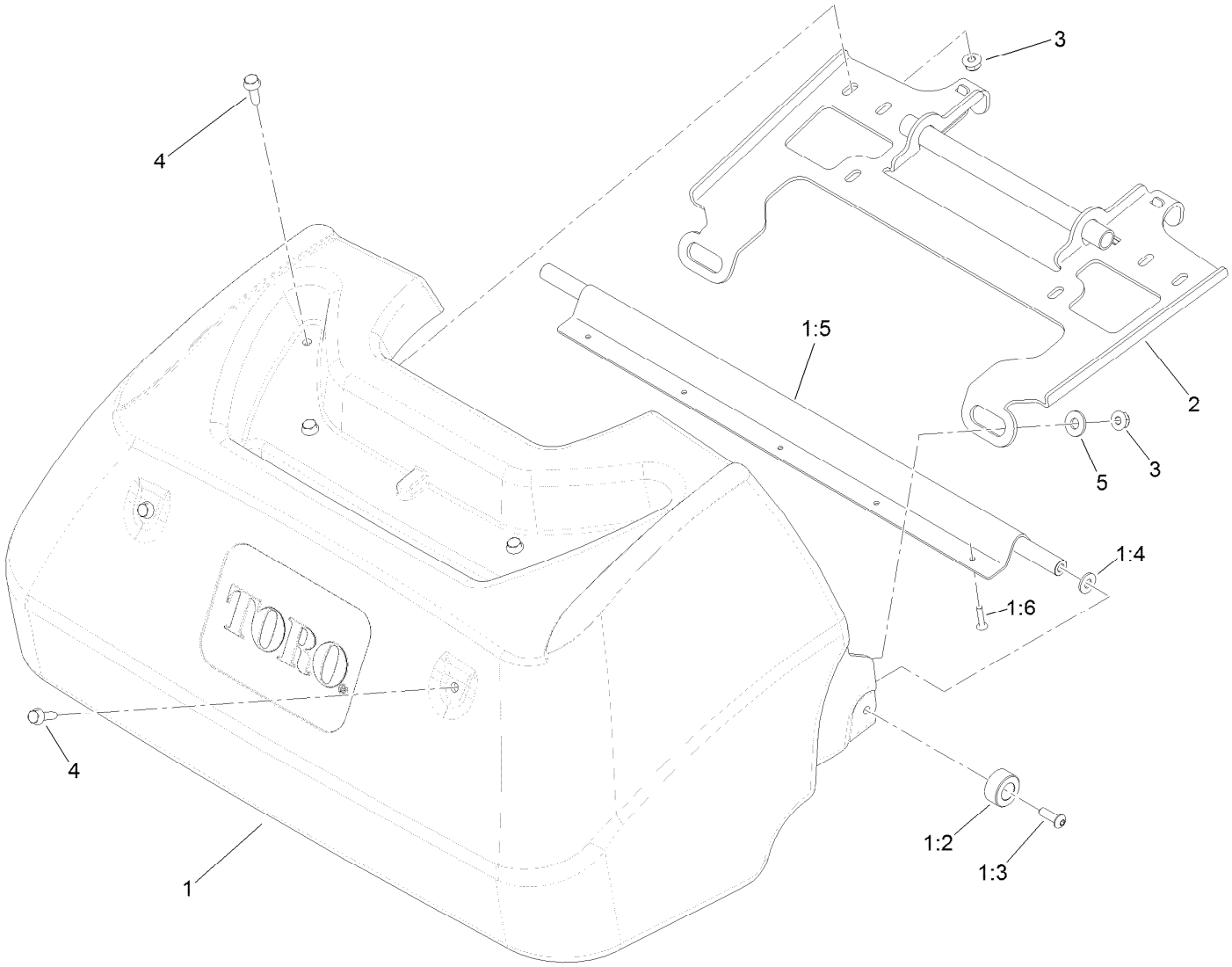

Grass Basket Assembly No. 125-3500

Ref.	*Part Number*	*Qty.*	*Description*
1	127-1539	1	Basket ASM
1:2	121-4730	2	Bumper-Basket
1:3	3274-69	2	Screw-HSBH
1:4	120-9679	2	Washer-Flat
1:5	127-1541	1	Channel
1:6	3290-382	5	Rivet-Pop
2	133-8833-03	1	Bracket-Basket
3	119-4040	6	Nut-HF, NI
4	119-4012	6	Screw-HWHTF
5	1-603716	2	Washer-Friction

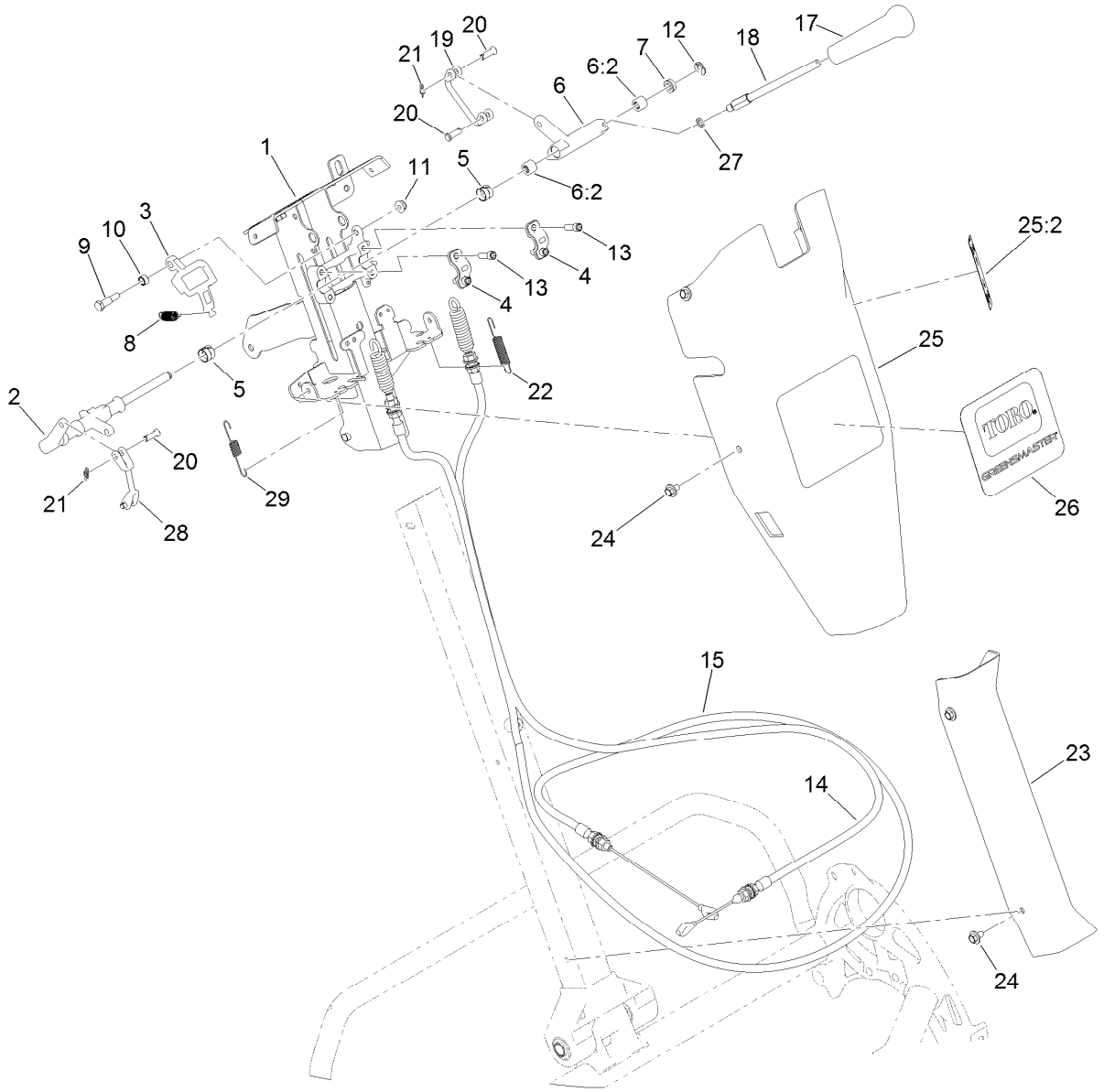

Reel Controls and Covers Assembly

Ref.	Part Number	Qty.	Description
1	147-2288	1	Kit- Upper Receiver Replacement
2	140-9305	1	Shaft-Main, Controls
3	137-0266	1	Cam-Latch, Upper
4	138-1513	2	Clamp-Shaft, Control
5	137-0263	2	Bushing-Split
6	137-0312	1	Reel Lever ASM
6:2	138-1637	2	Bearing-Needle
7	131-3187	1	Seal-V-Ring
8	140-3410	1	Spring-Extension
9	137-0313	1	Screw-Shoulder
10	137-0346	1	Spacer-Latch, Bail
11	104-7201	1	Nut-HF, NI
12	32151-47	1	Ring-Retaining
13	140-9233	4	Screw-HSH
14	137-0180	1	Cable-Clutch
15	140-9330	1	Cable-Reel Engagement

Ref.	Part Number	Qty.	Description
17	104-9760	1	Knob-Black
18	137-0190	1	Rod-Handle, Reel Lever
19	137-0232	1	Connector-Clevis
20	1-808265	4	Pin-Clevis
21	138-1587	2	Clip-Pin, Cotter
22	138-1536	1	Spring-Extension
23	138-1479	1	Cover-Handle, Lower
24	46-6810	8	Screw And Washer ASM
25	139-4304	1	Control Upper Cover ASM
25:2	138-1589	1	Decal-Reel Drive Engagement
26	140-3383	1	Decal-Greensmaster Flex 1021
27	75-5470	1	Spacer-Bearing
28	138-1592	1	Connector-Clevis
29	140-3417	1	Spring-Extension

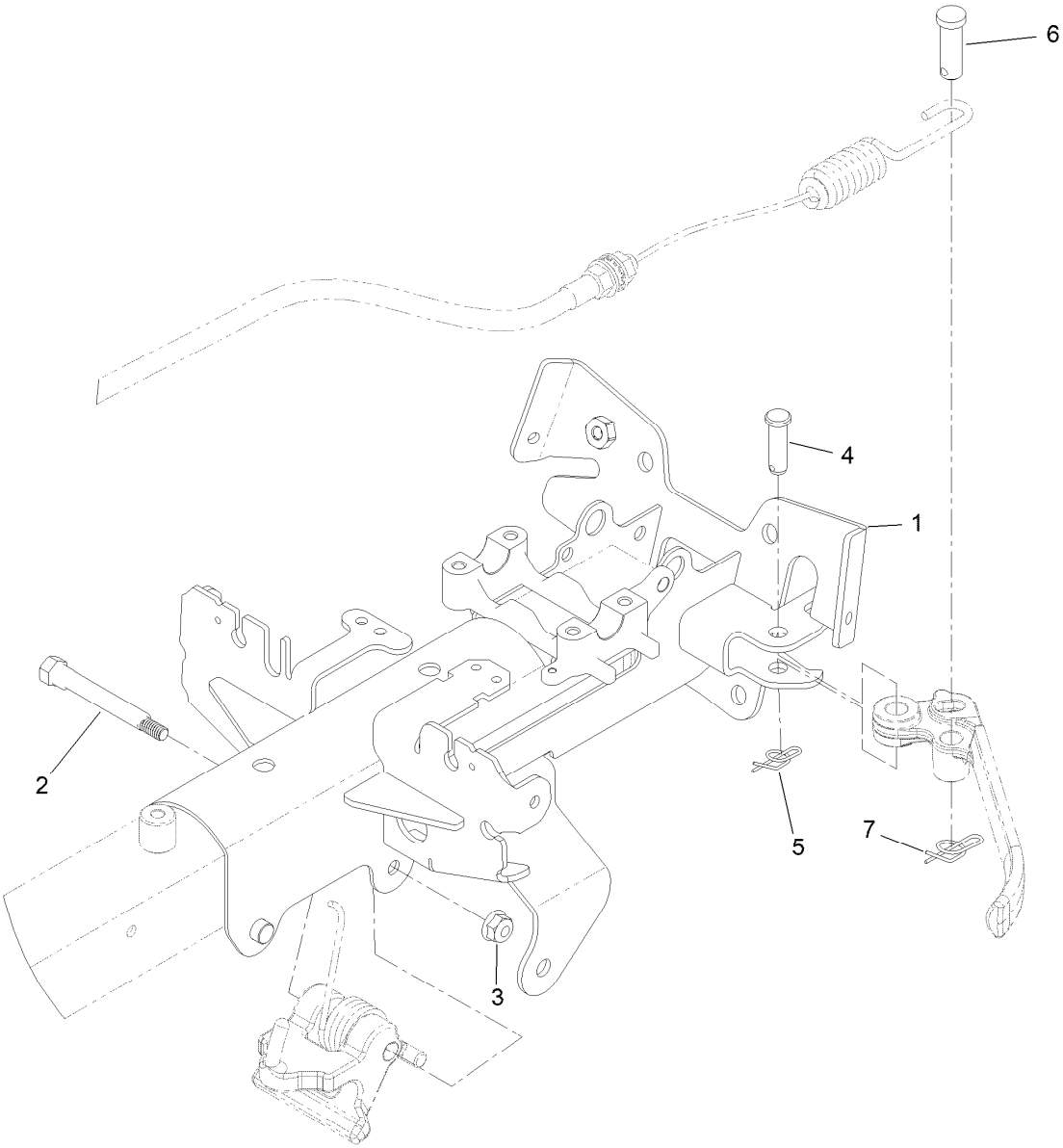

Upper Receiver Assembly No. 147-2288

Ref.	*Part Number*	*Qty.*	*Description*
1	147-2284-0P	1	Upper Receiver, Welded
2	147-2269	1	Cam-Handle, Pivot
3	119-4040	1	Nut-HF, NI
4	283-61	1	Pin-Yoke
5	116-6639	1	Pin-Cotter, Locking
6	1-808285	1	Pin-Clevis
7	140-9312	1	Pin-Cotter, Locking

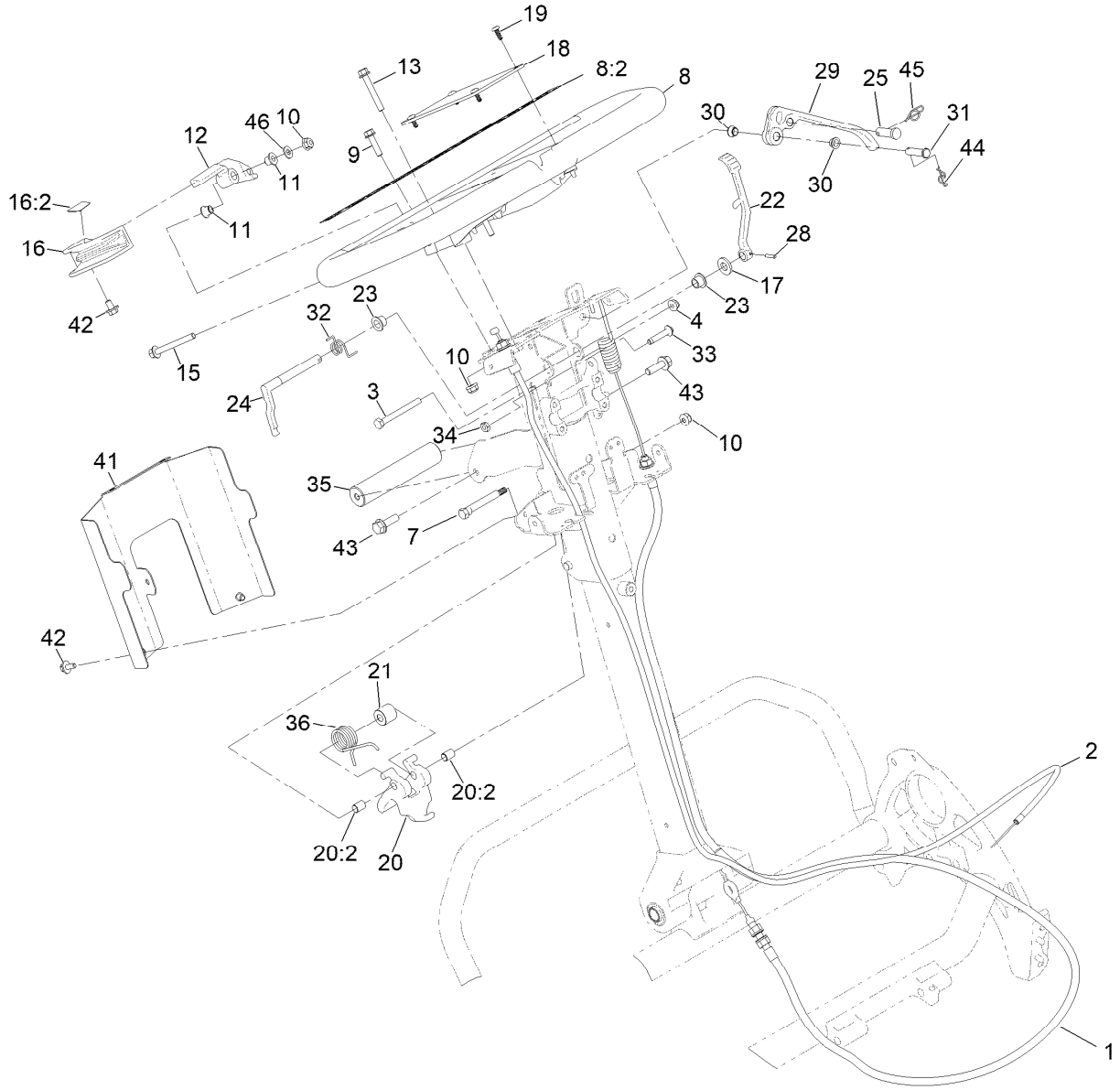

Upper Handle Assembly

Ref.	Part Number	Qty.	Description
1	140-9318	1	Cable ASM, Brake
2	137-0182	1	Cable-Throttle
3	321-15	1	Screw-HH
4	104-7201	1	Nut-HF, NI
7	147-2269	1	Cam-Handle, Pivot
8	138-1645	1	Handle ASM
8:2	138-5532	1	Decal-Warning, General
9	120-4654	2	Screw-HHF
10	119-4040	4	Nut-HF, NI
11	138-3538	2	Bushing-Flange
12	138-1636	1	Arm-Throttle
13	138-5527	1	Screw-HHF
15	140-9317	1	Screw-HHF,Lock
16	139-4303	1	Throttle Lever ASM
16:2	138-5534	1	Decal-Throttle
17	100-4852	1	Washer-Hardened
18	138-5514	1	Plate-Notepad, Handle
19	127-6843	4	Screw-Plastite, Torx Pan
20	137-0317	1	Handle Adjuster ASM
20:2	137-0308	2	Bushing-Igus

Ref.	Part Number	Qty.	Description
21	140-9335	1	Spacer-Spring
22	140-3377	1	Lever-Lock, Brake
23	138-1514	2	Bushing-Flange
24	138-1573	1	Latch-Brake
25	1-808285	1	Pin-Clevis
28	32121-73	1	Pin-Roll
29	140-9298	1	Lever-Brake
30	138-5538	2	Bushing-Flange
31	283-6	1	Pin-Clevis
32	138-1518	1	Spring-Brake, Torsion
33	132-6777	1	Screw-Twh Thd Roll
34	120-9695	1	Nut-Jam
35	138-1535	1	Handle-Assist, Lift
36	140-9334	1	Spring-Handle, Torsion
41	138-5530-03	1	Cover-Bottom, Controls
42	46-6810	3	Screw And Washer ASM
43	115-5142	2	Screw-HHF
44	116-6639	1	Pin-Cotter, Locking
45	140-9312	1	Pin-Cotter, Locking
46	139-1323	1	Washer-Spcl

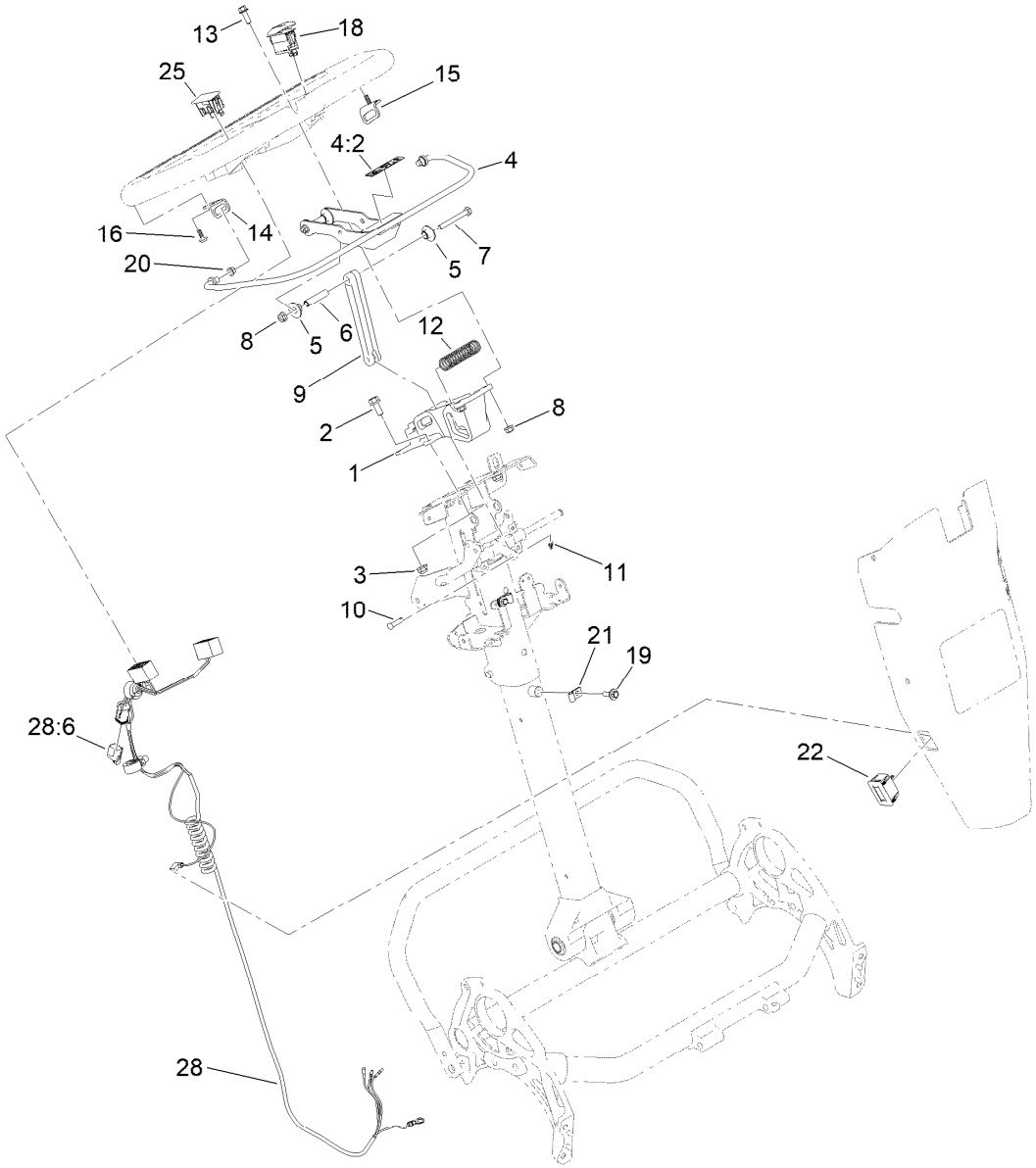

Traction Bail Assembly

Ref.	Part Number	Qty.	Description
1	138-5524	1	Mount-Handle
2	3234-47	2	Screw-HHF
3	119-4041	2	Nut-HF
4	139-4302	1	Clutch Bail ASM
4:2	138-5533	1	Decal-Bail, Traction
5	138-3466	4	Bushing-Flange
6	138-3465	2	Spacer-Tube
7	321-18	2	Screw-HH
8	119-4040	4	Nut-HF, NI
9	138-5515	1	Link-Bail, Clutch
10	353-322	1	Pin-Clevis
11	138-1587	1	Clip-Pin, Cotter
12	138-3468	1	Spring-Compression

Ref.	Part Number	Qty.	Description
13	120-9678	2	Screw-HHF
14	138-3539	1	Bracket-Bail, RH
15	138-3540	1	Bracket-Bail, LH
16	138-5775	2	Screw-Delta Point
18	122-1497	1	Switch-Rocker, On-None-Off
19	46-6811	2	Screw-Thd Roll Sems
20	138-5538	2	Bushing-Flange
21	2412-91	2	Clamp
22	119-1347	1	Meter-Hour
25	119-7791	1	Plug-Hole
28	122-1416	1	Harness-Wire
28:6	32180-091	1	Cap-Dust, 2 Way

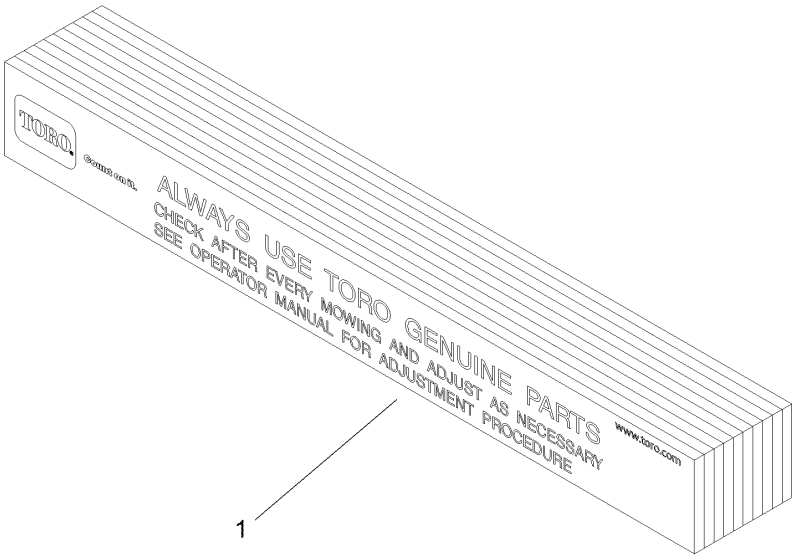

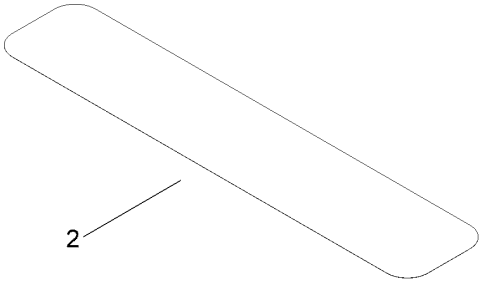

Miscellaneous Parts Assembly

Ref.	*Part Number*	*Qty.*	*Description*
1	125-5610	1	Paper-Reel, Toro (10 Pack)
2	140-5531	1	Shim-Toro Reel (.002In)

Attachments and Accessories

For 04860 Greensmaster Flex 1021 Traction Unit

Product Name	Model/Part
Narrow Wiehle Roller Kit, Greensmaster DPA Cutting Units	04027
Paspalum Wiehle Roller, Greensmaster Flex 1021 Traction Unit	04028
Extended Wiehle Roller Kit, Greensmaster Flex 1021 Traciton Unit	04029
Wheel Kit	04123
Light Kit (2019+)	04135
Push Broom Kit, Walk Greensmower (2019+)	04136
CU Light Kit Mount	04138
Trans Pro 80 Tow-Behind Trailer	04238
Flat Ramp	04245
Rail Ramp Kit (Update)	04247
Split Full Front Roller	04249
Split Narrow Wiehle Roller	04250
21in Soft Grooming Brush	04270
21in Stiff Grooming Brush	04271
Turf Evaluator	04399
Universal Groomer Drive Kit	04648
21in Twin Tip Groomer Reel	04802
21in Full Roller	04815
21in Wide Wiehle Roller	04825
11-Blade 21in FLEX ES CU	04863
14-Blade 21in FLEX ES CU	04864
Bedbar	106-2648-01
Bedknife-Tournament, Extended	108-4302
Bedknife-Microcut, Extended	108-4303
Bedknife-EDGEMAX, Microcut	115-1880
Bedknife-EDGEMAX, Tournament Cut	115-1881
Roller Extension Kit	115-7361
Front Brush for Narrow Wiehle Roller (Qty 1)	115-7377
Front Brush for Wide Wiehle Roller (Qty 1)	115-7378
Front Brush for Full Roller (Qty 1)	115-7379
Front Comb for Narrow Wiehle Roller (Qty 1)	115-7380
Front Comb for Wide Wiehle Roller (Qty 1)	115-7381
Front Comb for Full Roller (Qty 1)	115-7382
Rear Roller Scraper Kit with Roller	115-7383
High Height-of-Cut Arms (Qty 1)	120-9600
Rear Roller Adjustment (Qty 1)	120-9602
MVP Kit-Cutting Unit Re-Build	121-2637
Premium Engine Oil 10w30 (55 Gallon Drum)	121-6392
Premium Engine Oil 10w30 (5 Gallon Pail)	121-6393
Front Scraper for Narrow Wiehle Roller (Qty 1)	125-3503
Front Scraper for Wide Wiehle Roller (Qty 1)	125-3504
Front Scraper for Full Roller (Qty 1)	125-3505
Toro Reel Paper (10 Pack)	125-5610
21in Soft Grooming Brush Kit	127-1547
21in Stiff Grooming Brush Kit	127-1548
Angle Indicator	131-6828

Attachments and Accessories (continued)

Angle Indicator Mount	131-6829
Grease-Synthetic	136-8595
Bedknife-EDGEMAX	137-6092
Bedknife-Fairway	137-6097
Rail Ramp Kit TP100	138-5011
Retention Kit	139-2683
Bedknife-EDGEMAX, Microcut Short	139-4320
Bedknife-EDGEMAX, Tournament Short	139-4321
Access Backlap Kit	139-4342
Wireless Hour Meter Kit	139-4369
Retention Straps Kit	139-6477
Shim-TORO Reel (.002in)	140-5531
Full Rear Roller(2.0in Dia)(21in)	140-5560
Blade-GR Groomer, Twin Tip (0.032in)	140-5580
Blade-GR Groomer, Helix (0.028in)	140-5581
Blade-GR Groomer, Helix (0.015"in)	140-5582
Rear Roller ASM, 21 Inch	140-9259
Kit-flex Roller Bracket, Tp80	147-2291
Bedknife-Microcut	93-4262
Bedknife-Tournament Cut	93-4263
Bedknife-Low Cut	93-4264
Bedknife-Highcut	94-6392
Height-of-Cut Bar	94-9010
Bedbar-Aggressive	99-3794-0P

Notes:

Notes:

Notes:

TORO®

Count on it.