Form No. 3443-917 Rev C

TORO®

Count on it.

Operator's Manual

AccuraSeed 620

Model No. 46430—Serial No. 321000001 and Up
Model No. 46430—Serial No. 323C11157 and Up

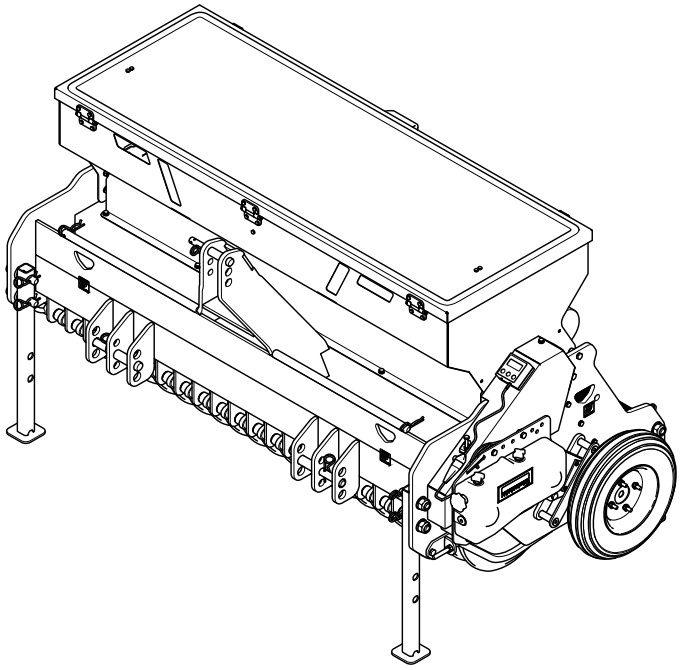

Register at www.Toro.com.
Original Instructions (EN)

3443-917

⚠ WARNING

CALIFORNIA
Proposition 65 Warning

Use of this product may cause exposure to chemicals known to the State of California to cause cancer, birth defects, or other reproductive harm.

Introduction

This attachment creates holes and disperses seed to revitalize existing turf and establish new turf. It is intended to be used by professional, hired operators in commercial applications. It is designed primarily for working large areas on well-maintained lawns in parks, golf courses, sports fields, and on commercial grounds. Using this product for purposes other than its intended use could prove dangerous to you and bystanders.

Read this information carefully to learn how to operate and maintain your product properly and to avoid injury and product damage. You are responsible for operating the product properly and safely.

Visit www.Toro.com/Bullseye for product safety and operation training materials, accessory information, help finding a dealer, or to register your product.

Whenever you need service, genuine Bullseye parts, or additional information, contact an Authorized Service Dealer or Bullseye Customer Service and have the model and serial numbers of your product ready. Figure 1 identifies the location of the model and serial numbers on the product. Write the numbers in the space provided.

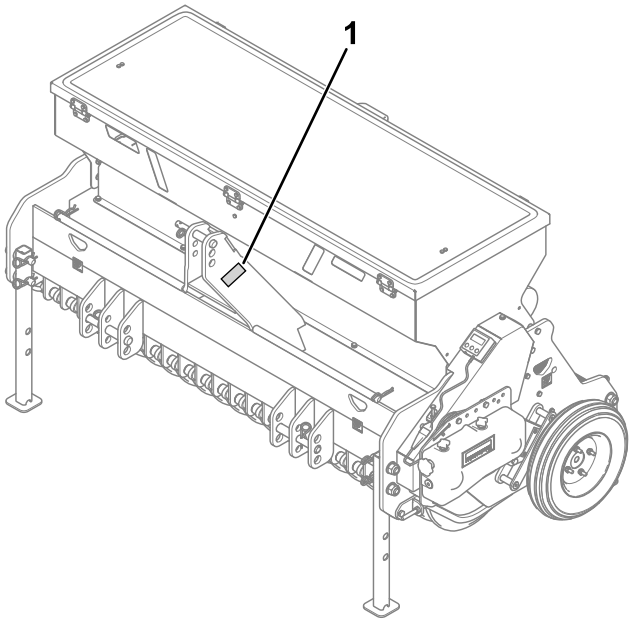

g347418

Figure 1

1. Model and serial number location

Model No. _____

Serial No. _____

This manual identifies potential hazards and has safety messages identified by the safety-alert symbol (Figure 2), which signals a hazard that may cause serious injury or death if you do not follow the recommended precautions.



g000502

Figure 2
Safety-alert symbol

This manual uses 2 words to highlight information. **Important** calls attention to special mechanical information and **Note** emphasizes general information worthy of special attention.

© 2023—The Toro® Company
8111 Lyndale Avenue South
Bloomington, MN 55420

Contact us at www.Toro.com.
Printed in the USA
All Rights Reserved

Contents

Safety 3
General Safety 3
Safety and Instructional Decals 4
Setup 5
1 Inspecting the Machine 5
Product Overview 5
Controls 5
Specifications 6
Attachments/Accessories 6
Before Operation 7
Before Operation Safety 7
Understanding the Traction Unit Controls 7
Connecting to a 3-Point Hitch 7
Adjusting the Seed Gauges 8
Filling the Seed Hopper 8
Testing the Seed Distribution 9
Adding Weight to the Attachment 10
Preparing to Operate the Attachment 10
Transporting the Machine 10
Practicing the Operating Procedures 10
During Operation 11
During Operation Safety 11
Slope Safety 11
Operating the Attachment 12
Operating Tips 12
After Operation 13
After Operation Safety 13
Hauling the Machine 13
Removing the Attachment 13
Maintenance 15
Recommended Maintenance Schedule(s) 15
Maintenance Safety 15
Greasing the Bearings 16
Checking the Grease Level in the Gearbox 17
Checking the Tire Pressure 17
Cleaning the Seed Tray 17
Washing the Attachment 17
Storage 18
Storage Safety 18
Storing the Machine 18
Troubleshooting 19

Safety

General Safety

This product is capable of causing personal injury. Always follow all safety instructions to avoid serious personal injury.

- Read and understand the contents of both this *Operator's Manual* and the operator's manual of the traction unit before using this machine. Ensure that everyone using this product knows how to use this machine and the traction unit and understands the warnings.
- Use your full attention while operating the machine. Do not engage in any activity that causes distractions; otherwise, injury or property damage may occur.
- Do not put your hands or feet near moving components of the machine.
- Do not operate the machine without all guards and other safety protective devices in place and working on the machine.
- Keep the machine away from bystanders while it is moving.
- Keep children out of the operating area. Never allow children to operate the machine.
- Stop the machine, shut off the engine, engage the parking brake of the traction unit, remove the key, and wait for all moving parts to stop before servicing, fueling, or unclogging the machine.

Improperly using or maintaining this machine can result in injury. To reduce the potential for injury, comply with these safety instructions and always pay attention to the safety-alert symbol ⚠, which means Caution, Warning, or Danger—personal safety instruction. Failure to comply with these instructions may result in personal injury or death.

Safety and Instructional Decals

Safety decals and instructions are easily visible to the operator and are located near any area of potential danger. Replace any decal that is damaged or missing.

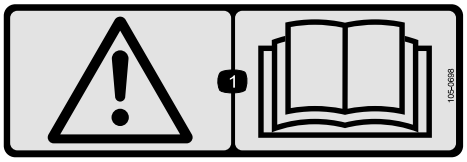

decal105-0698

105-0698

1. Warning—read the *Operator's Manual*.



decal133-8061

133-8061

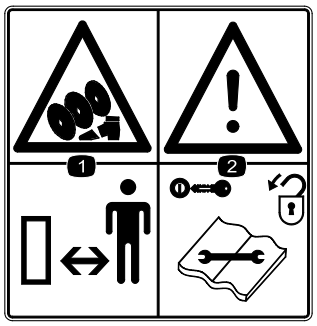

decal144-8257

144-8257

1. Cutting/dismemberment hazard of foot; auger—keep bystanders away.
2. Warning—remove the key, disconnect the PTO, and read the *Operator's Manual* before performing maintenance.



decal144-8552

144-8552

1. Do not remove the receptacle with the seed flap open.
2. Close the seed flap before removing the receptacle.

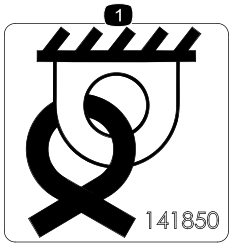

decal144-8553

144-8553

1. Tie down point

Setup

1

Inspecting the Machine

No Parts Required

Checking the Traction Unit Requirements

Use the following list as a reference:

- Refer to Specifications (page 6) for the minimum horse power and minimum lifting capacity for the traction unit.
- The traction unit must have a category 2 or higher three-point hitch.
- Adequate front-end weight (ballast) to offset the weight of the machine.
- Check the tire air pressure of the traction unit.

  Adjust the tire air pressure as needed.

  Important: **Do not exceed the maximum or minimum tire inflation pressures as recommended by tire manufacturer.**

Checking the Ballast Requirements

⚠ WARNING

Mounting the machine to the rear of the traction unit decreases the weight on its front axle.

Failure to add required ballast may result in an accident and severe injury or death.

- **To ensure adequate steering control and stability you may need to add ballast to the front of the traction unit.**
- **Refer to the traction unit *Operator's Manual* for ballast requirements.**

Product Overview

Controls

Seeding-Rate Gauge

Use the gauge (Figure 3) to control the amount of seeds emitted from the machine during operation.

Loosen the top knobs, then turn the side knob to change the seeding rate. The rate (1 through 11) is listed on the decal.

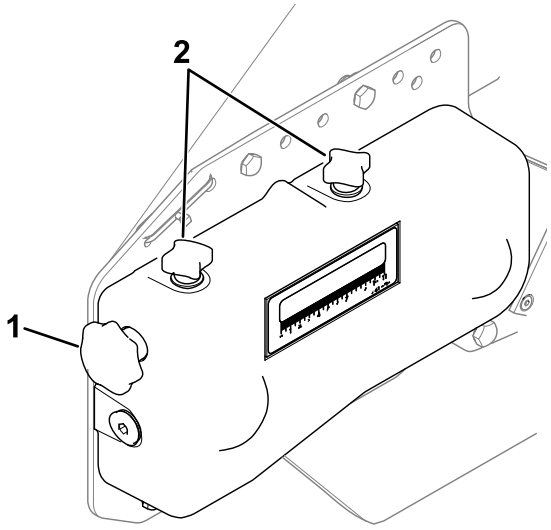

g345882

Figure 3

1. Side knob
2. Top knobs

Seed-Size Gauge

Use the gauge (Figure 4) to adjust the valve opening.

Loosen the knob and move it to the appropriate area.

- For fine (very small) seeds: The valve must be completely closed. Move the gauge knob to the position marked with a 0.
- For large seeds: The valve must be opened. Move the gauge knob to the position marked with a 1, 2, or 3.

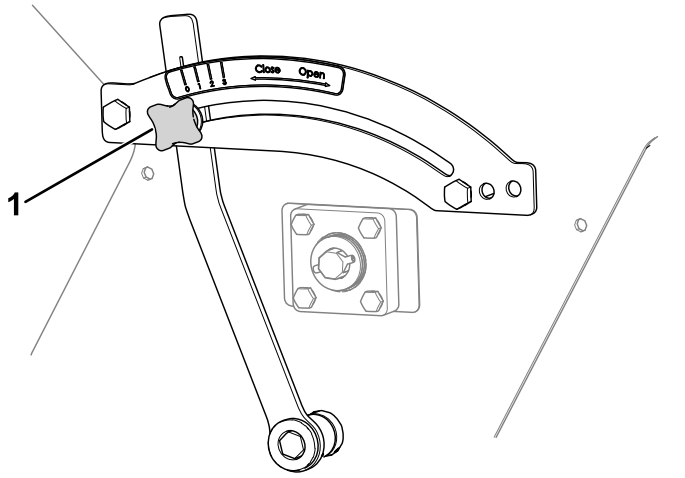

g345429

Figure 4

1. Seed-size-gauge knob

Digital Surface Meter

The digital surface meter (Figure 5) shows various data, including treated surfaces, distances, and operation hours.

A separate manual for the meter is included in the attachment toolbox.

Note: If the surface-meter settings have disappeared from the memory, the machine-specific settings that you should enter are as follows (with parameter UN set at 0):

- Parameter C (speed-sensor pulses): 31
- Parameter L (working width): 1.60

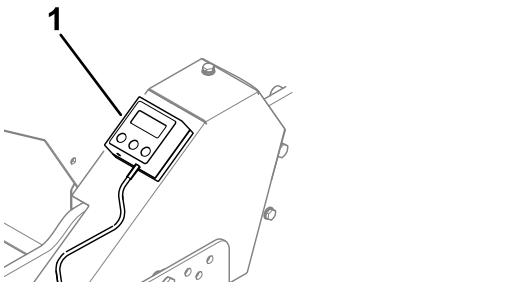

g347422

Figure 5

1. Digital surface meter

Specifications

Traction Unit Requirements

Minimum lifting capacity	1,300 kg (2,866 lb)
Minimum output-power rating	33.5 kW (45 hp)
Tow system	3-point hitch, category 2 minimum

Attachment Specifications

Width	187.9 cm (74 inches)
Length	99 cm (39 inches)
Height	144.7 cm (57 inches)
Working width	157.4 cm (62 inches)
Working depth	5 to 20 mm (0.19 to 0.78 inch)
Maximum working speed	12 km/h (7.5 mph)
Maximum capacity (theoretical at maximum speed of 12 km/h [7.5 mph] and a single pass)	18,900 m^2/h (203,438 ft^2/h)
Weight	1,184 kg (2,610 lbs)
Distance between pairs of slicing discs	75 mm (2.9 inches)
Number of slicing disc pairs	21
Seed hopper capacity	276 L (9.7 ft^3)
Standard components	Rear roller that can be filled with water and roller scraper
	Infinitely adjustable gearbox to set seeding rate
	Cylinder for the manual
	Fully sealed seed hopper with windows
	Terrain-following seed dispensing wheel
	Independently floating discs
	Adjustable legs for storage

Attachments/Accessories

A selection of Bullseye approved attachments and accessories may be available for use with the machine to enhance and expand its capabilities. Contact your Authorized Service Dealer or authorized Bullseye distributor or go to www.Toro.com/Bullseye for a list of all approved attachments and accessories.

To ensure optimum performance and continued safety certification of the machine, use only genuine Bullseye replacement parts and accessories. Replacement parts and accessories made by other manufacturers could be dangerous, and such use could void the product warranty.

Operation

Before Operation

Note: Determine the left and right sides of the machine from the normal operating position.

Before Operation Safety

- Never allow children or untrained people to operate or service the machine. Local regulations may restrict the age of the operator. The owner is responsible for training all operators and mechanics.
- Become familiar with the safe operation of the equipment, operator controls, and safety signs.
- Know how to stop the machine and shut off the engine of the traction unit quickly.
- Ensure that the guards and shields are properly installed and maintained. Replace missing, damaged, or worn guards and shields before using the machine.
- Inspect the area where you will use the machine and remove all objects that the machine could strike.
- Ensure that your traction unit is suitable for use with an implement of this weight by checking with your traction unit supplier or manufacturer.
- Shut off the machine, shut off the engine and remove the key of the traction unit, and wait for all moving parts to stop before making any adjustments to the machine.

Understanding the Traction Unit Controls

Familiarize yourself with the operation of the following traction unit controls before operating the machine:

- Three-point hitch (raise/lower)
- Clutch
- Throttle
- Gear selection
- Parking brake

Important: **Refer to the traction unit *Operator's Manual* for operating instructions.**

Connecting to a 3-Point Hitch

Connecting the Lower Link Arms

1. Ensure that the attachment is positioned on a level surface for installation.
2. Remove the hairpin cotters from the hitch pins (Figure 6).

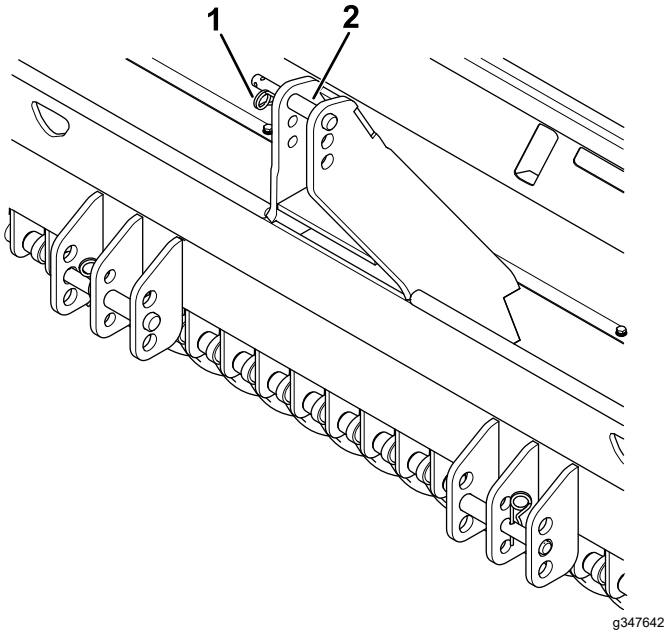

Figure 6

1. Hairpin cotter (3)
2. Hitch pin (3)

3. Back the traction unit squarely up to the attachment so that the lower connecting arms can be attached to the frame.
4. Engage the parking brake, shut off the engine, and remove the key from the ignition. Wait for the engine and all moving parts to stop before leaving the operator's seat.

   Note: For maximum ground clearance, install the hitch pins in the lower mounting holes of the hitch plate for the attachment.

5. Insert the right and left lower link arms onto the hitch pins (Figure 7).

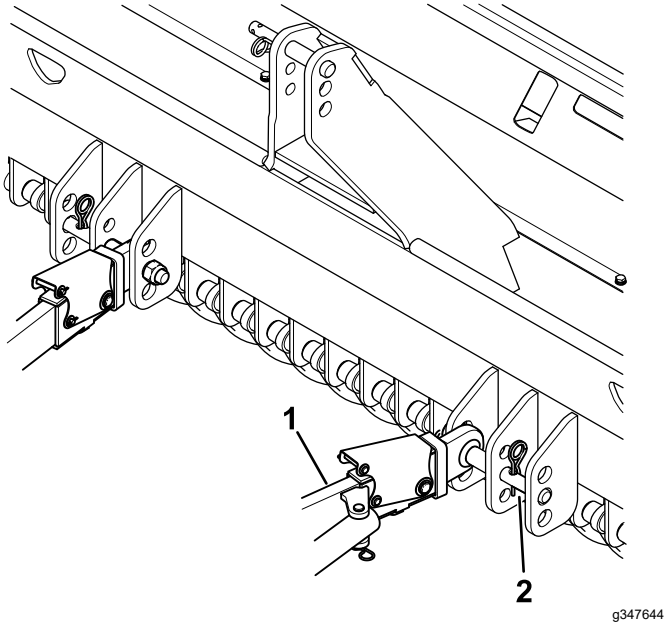

Figure 7

1. Lower link arm (2)
2. Hitch pin and hairpin cotter (2)

6. Secure the lower link arms to the hitch pins using the hairpin cotters.

Connecting the Upper Link Arm

1. Connect the upper link arm to the bracket and secure it with the link pin and the lynch pin (Figure 8).

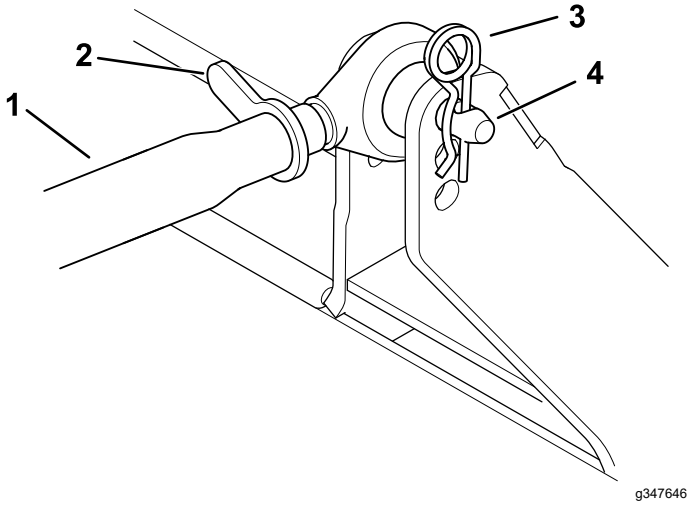

Figure 8

1. Upper link arm
2. Jam nut
3. Hairpin cotter
4. Link pin

2. Grease the threaded steel upper link arm tubes.
3. Rotate the upper link arm to tighten or loosen the link as needed.
4. Tighten the jam nut to secure the upper link arm into position.
5. Start the traction unit and lift the attachment off the ground.
6. Remove the cotter pins from the stands use them to secure the stands in the raised position as shown in Figure 9.

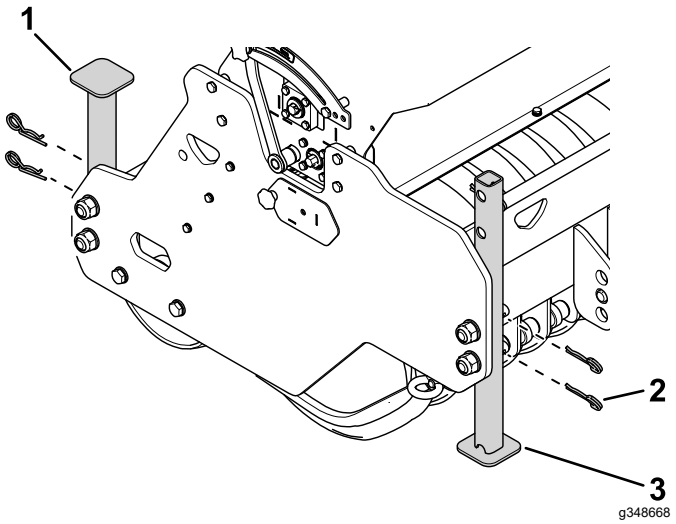

Figure 9

1. Rear stand
2. Cotter pin
3. Front stand

Adjusting the Seed Gauges

Adjust the seed-size gauge and seeding-rate gauge per your seeding requirements. Refer to Controls (page 5) for instructions to adjust these gauges.

Filling the Seed Hopper

Open the seed cover and add seeds to the hopper on the top of the attachment.

Ensure that the hopper is not damp. Dampness can cause the seeds to stick to each other.

- To open the seed cover, release the rubber latches and use the lid handle to raise the cover (Figure 10).
- To close the seed cover, lower the cover and use the rubber latches to secure the cover in-place.

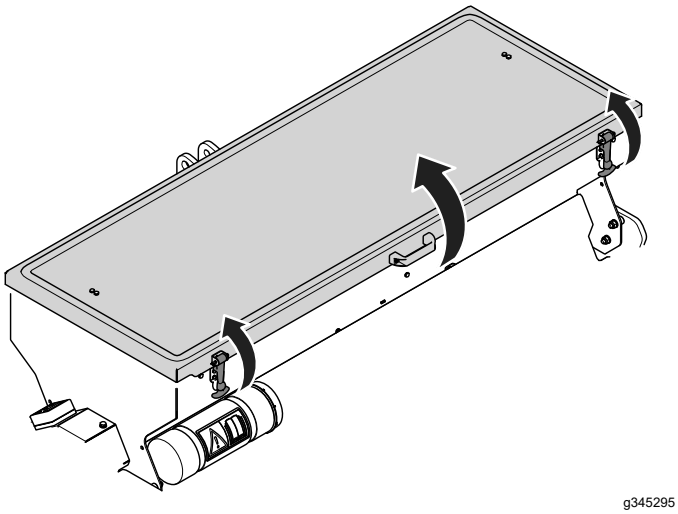

g345295

Figure 10

Testing the Seed Distribution

Service Interval: Every 100 hours

The quantity of seeds should be adjusted for the correct operation of the attachment. See the Sowing Table (page 10) for an indication of the required quantity.

You will need the following accessories for adjusting the quantity of seeds:

- Scale
- Tray for weighing the seeds
- Enough seeds for filling at least 30% of the hopper

Perform the following steps for the seed distribution test:

1. Set the seed-size gauge to 0.
2. Fill the hopper at least 30% with seeds and make sure that these are evenly spread throughout the hopper.
3. Loosen the seed-tray knob and slide the seed tray out of the machine (Figure 11).

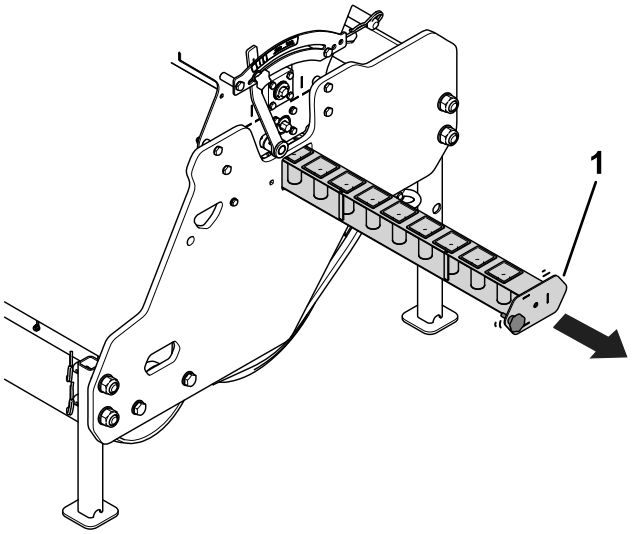

g347767

Figure 11

1. Seed tray

4. Rotate the seed tray 90° and slide it back into the machine (Figure 12).

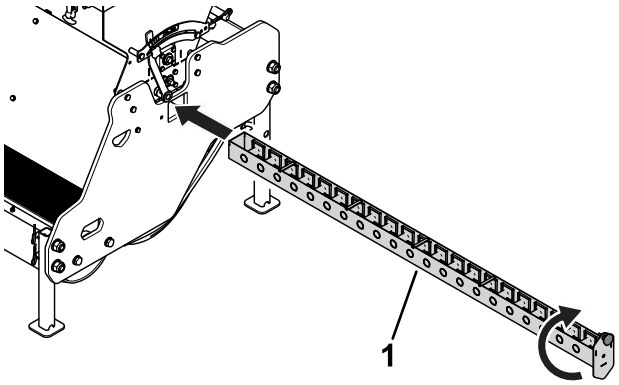

g347766

Figure 12

1. Flipped seed tray

5. Turn the wheel 13 rotations counter-clockwise.
6. Slide the seed tray out of the machine—being careful not to spill any seed—and empty the seed into a container for weighing.
7. Weigh the seeds in kilograms and multiply the outcome by 384.

The resulting outcome is the amount of seeds in kilograms that should be spread per hectare. To obtain the outcome in pounds per acre, multiply the resulting outcome by 0.89.

If the calibration setting is in a high position, it may result in too many seeds for the tray to collect. If so, then divide the 13 rotations into several smaller steps

Sowing Table

Seeding-Rate Gauge Setting (with a seed-size gauge setting of 0)	**Amount of Emitted Grass Seed**		
	Ryegrass: Kg/ha (Pound/Acre)	**Bluegrass**: Kg/ha (Pound/Acre)	**Red Fescue grass**: Kg/ha (Pound/Acre)
0	0	0	0
1	8.5 (7.6)	12.5 (11.2)	7.6 (6.8)
2	26.6 (23.8)	53.3 (47.5)	24.3 (21.6)
3	45.3 (40.4)	81.1 (72.3)	42 (37.5)
4	67.1 (59.9)	115.5 (103)	58.5 (52.2)
5	87.8 (78.4)	157.7 (140.7)	81 (72.2)
6	112.3 (100.2)	201.7 (180)	102.6 (91.5)
7	140.1 (125)	252.5 (225.2)	127.3 (113.6)
8	172.5 (153.9)	323.3 (288.4)	158.5 (141.4)
9	211.4 (188.6)	387.6 (345.8)	192.4 (171.7)
10	252.2 (225)	456 (406.8)	236.7 (211.1)
11	319.3 (284.9)	585.4 (522.3)	292.9 (261.3)

Adding Weight to the Attachment

If the ground is too hard, you can add weight to the attachment; refer to the Weight Kit *Installation Instructions*.

Preparing to Operate the Attachment

1. Fill the seed hopper at least 30% full; refer to Filling the Seed Hopper (page 8).
2. Set the seeding gauges; refer to Controls (page 5).
3. Perform the following checks:
   - Check the slicing discs for damage and repair them, if necessary.
   - Check whether the passageway to the sowing elements is not blocked (e.g., funnels or sowing pipes).
   - Check whether the machine is not wet or damp, predominantly in the sowing system.
   - Check the effectiveness of the sowing system by rotating the runner once (counter-clockwise).
   - Check whether the drive runs smoothly.

Transporting the Machine

- Raise the attachment before transporting the machine.
- To avoid loss of control, move across steep inclines slowly, approach rough areas at reduced speed, and cross severe undulations carefully.

Important: **Do not exceed transport speeds of 20 km/h (12.4 mph).**

Practicing the Operating Procedures

Before using the attachment, find a clear area and practice operating the traction unit with the attachment installed.

Important: **If there are sprinkler heads, electrical or communication lines, or other obstructions in the area, mark these locations to ensure that these items are not damaged during operation.**

- Operate the traction unit using the recommended gear settings and become thoroughly familiar with the traction unit handling with the attachment.
- Practice stopping and starting, raising the attachment, lowering the attachment, and aligning the attachment with previous passes.

Practice sessions helps you gain confidence in the performance of the attachment and helps ensure that you are using it properly.

⚠ WARNING

Adjusting or maintaining the attachment while the traction unit is running may result in an accident and severe injury or death.

- **Before leaving the operator's seat, engage the parking brake, shut off the engine, remove the key, and wait for all moving parts to stop.**
- **Lower the attachment onto the storage stands or appropriate blocking or jacks repairing the attachment.**
- **Ensure that all safety devices are secured in proper place before resuming operation.**

During Operation

During Operation Safety

- The owner/operator can prevent and is responsible for accidents that may cause personal injury or property damage.
- Wear appropriate clothing, including eye protection; long pants; substantial, slip-resistant footwear; and hearing protection. Tie back long hair and do not wear loose clothing or loose jewelry.
- Use your full attention while operating the machine. Do not engage in any activity that causes distractions; otherwise, injury or property damage may occur.
- Do not operate the machine when tired, ill, or under the influence of alcohol or drugs.
- Never carry passengers on the machine and keep bystanders and pets away from the machine during operation.
- Operate the machine only in good visibility to avoid holes or hidden hazards.
- Keep your hands and feet away from moving parts.
- Look behind and down before backing up to be sure of a clear path.
- Use care when approaching blind corners, shrubs, trees, or other objects that may obscure your vision.
- Stop the attachment whenever you are not using it.
- Stop the machine, shut off the engine, remove the key, wait for all moving parts to stop, and inspect the machine after striking an object or if there is an abnormal vibration in the machine. Make all necessary repairs before resuming operation.
- Slow down and use caution when making turns and crossing sidewalks with the machine. Always yield the right-of-way.
- Reduce speed on rough surfaces.
- When the attachment is connected to a traction unit and in the raised position, the weight of it affects stability, braking, and steering. Exercise caution when transporting between working areas.
- Never leave a running machine unattended.
- Before leaving the operating position, do the following:
  - Park the machine on a level surface.
  - Engage the parking brake.
  - Lower the attachment.
  - Shut off the engine and remove the key.
  - Wait for all moving parts to stop before leaving the machine.
- Do not operate the machine when there is the risk of lightning.
- Use Bullseye accessories, attachments, and replacement parts only.

Slope Safety

- Review the traction unit specifications to ensure that you do not exceed its slope capabilities.
- Slopes are a major factor related to loss of control and rollover accidents, which can result in severe injury or death. You are responsible for safe slope operation. Operating the machine on any slope requires extra caution.
- Review and understand the slope instructions in the manual and on the traction unit.
- Evaluate the site conditions to determine if the slope is safe for machine operation, including surveying the site. Always use common sense and good judgment when performing this survey.
- Review the slope instructions listed below for operating the machine on slopes and to determine whether you can operate the machine in the conditions on that day and at that site. Changes in the terrain can result in a change in slope operation for the machine.
- Avoid starting, stopping, or turning the machine on slopes. Avoid making sudden changes in speed or direction. Make turns slowly and gradually.
- Do not operate a machine under any conditions where traction, steering, or stability are in question.
- Remove or mark obstructions such as ditches, holes, ruts, bumps, rocks, or other hidden hazards. Tall grass can hide obstructions. Uneven terrain could overturn the machine.
- Be aware that operating the machine on wet grass, across slopes, or downhill may cause the machine to lose traction. Loss of traction to the drive wheels may result in sliding and a loss of braking and steering.
- Use extreme caution when operating the machine near drop-offs, ditches, embankments, water hazards, or other hazards. The machine could suddenly roll over if a wheel goes over the edge or the edge caves in. Establish a safety area between the machine and any hazard.
- Identify hazards at the base of the slope. If there are hazards, mow the slope with a power walk-behind mower.
- If possible, keep the attachment lowered to the ground while operating on slopes. Raising the attachment while operating on slopes can cause the machine to become unstable.
- Use extreme caution with other attachments. These can change the stability of the machine and

cause a loss of control. Always keep the machine in gear when going down slopes. Do not coast downhill (applicable only to gear-drive units).

Operating the Attachment

⚠ DANGER

The rotating slicing discs on the attachment are dangerous. Contact with them can cause serious injury or death.

Do not put your hands or feet under the attachment.

⚠ DANGER

When the attachment is in operation, contact with rotating or moving parts will severely injure hands and feet.

- **Before adjusting, cleaning, inspecting, troubleshooting, or repairing the attachment, shut off the traction-unit engine and wait for all moving parts to stop.**
- **Keep your face, hands, feet, and any other part of your body or clothing away from concealed, moving, or rotating parts.**

Important: **It is important to perform the following steps. If the machine is put into the ground in a non-operating position, serious damage to the machine might occur.**

Do not drive in reverse with the machine stands on the ground.

1. Drive to the sowing location.
2. Start at a speed of approximately 3 km/h (1.9 mph).
3. Lower the attachment gently to the ground until the slicing discs cut into the ground.
4. Increase your speed until you reach the appropriate speed per your seeding situation.

   Important: **The maximum sowing speed is 12 km/h (7.5 mph)**

Operating Tips

Overseeding

- A field can be treated two or three times in different directions in order to obtain a higher sowing density.
- Do not drive in sharp curves. Drive in straight lines to prevent damage to the machine and the ground.
- If a hard object in the ground is hit, the slicing discs can get damaged. If the discs become damaged, try to file the burrs or replace them.
- Ensure that the slicing discs do not get damp. Postpone sowing in wet conditions.
- If the slicing discs get damp, seeds can stick to each other and accumulate on the discs.
- Never drive in reverse when the machine is on the ground.

Important: **Do not put down more seed than recommended by the seed company. Overseeding can cause the grass to be too thick and cause it to be susceptible to fungus.**

After Operation

After Operation Safety

- Park the traction unit on a level surface; engage the parking brake of the traction unit; shut off the engine; remove the key; and wait for all movement to stop before leaving the operator's position.
- Allow the machine to cool before storing the machine in any enclosure.
- Keep all parts of the machine in good working condition and all hardware tightened.
- Replace all worn, damaged, or missing decals.

Hauling the Machine

Tie-down points for hauling the attachment are shown in Figure 11.

Note: Figure 11 shows the left side of the attachment. The right side includes tie-down points in a similar area (i.e., front and side of the attachment).

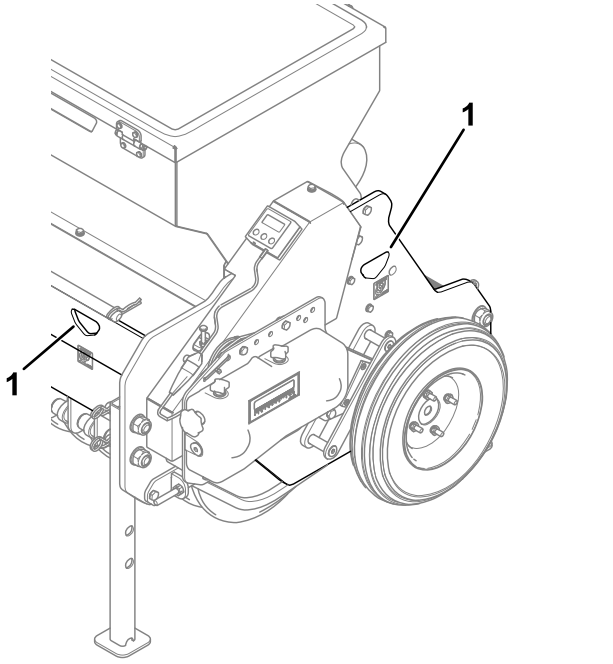

Figure 13
Left side shown

1. Tie-down points

Removing the Attachment

1. Raise the attachment.
2. Remove the cotter pins from the stands and use them to secure the stands in the lowered position as shown in Figure 14

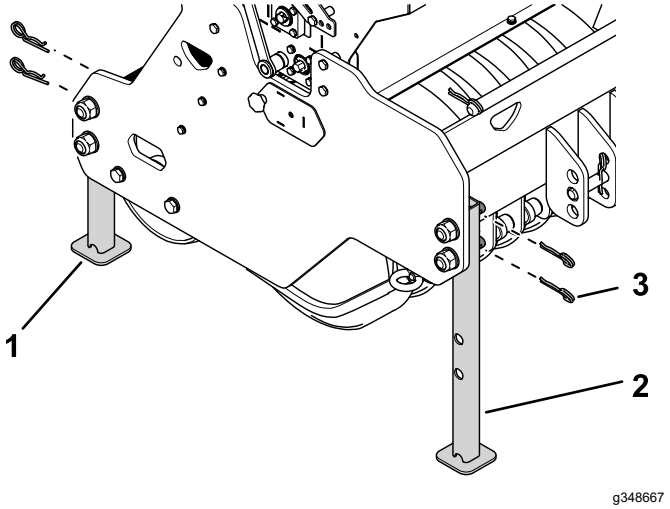

Figure 14

1. Rear stand
2. Front stand
3. Cotter pin

3. Park the machine on a level surface, engage the parking brake, lower the attachment to the ground, shut off the engine, and remove the key from the traction unit.
4. Loosen the upper link jam nut and rotate the upper link (Figure 15).

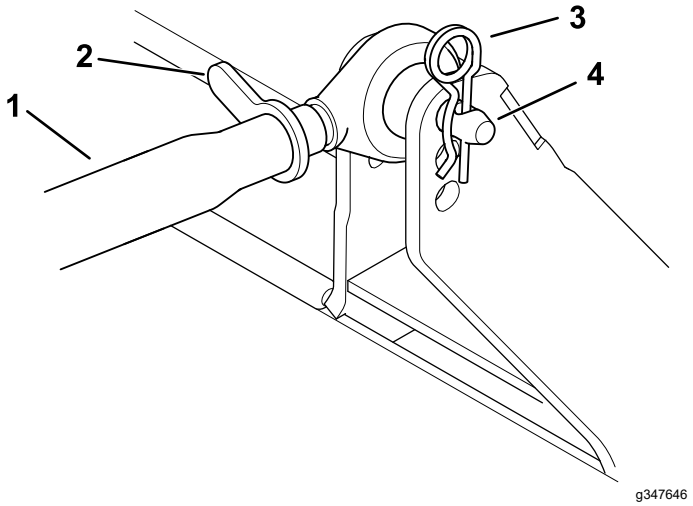

Figure 15

1. Upper link arm
2. Jam nut
3. Hairpin cotter
4. Link pin

5. Remove the upper link arm.
6. Remove the lower link arms (Figure 16).

Important: **Ensure that the attachment does not slide off the traction unit and cannot roll away.**

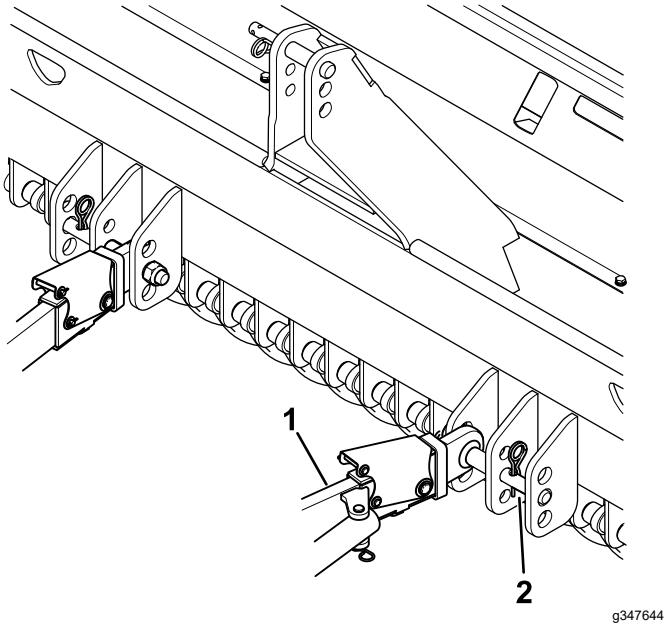

Figure 16

1. Lower link arm (2)
2. Hitch pin and hairpin cotter (2)

7. Start the traction unit and drive it away from the attachment.
8. Install the hairpin cotters to the hitch pins (Figure 17).

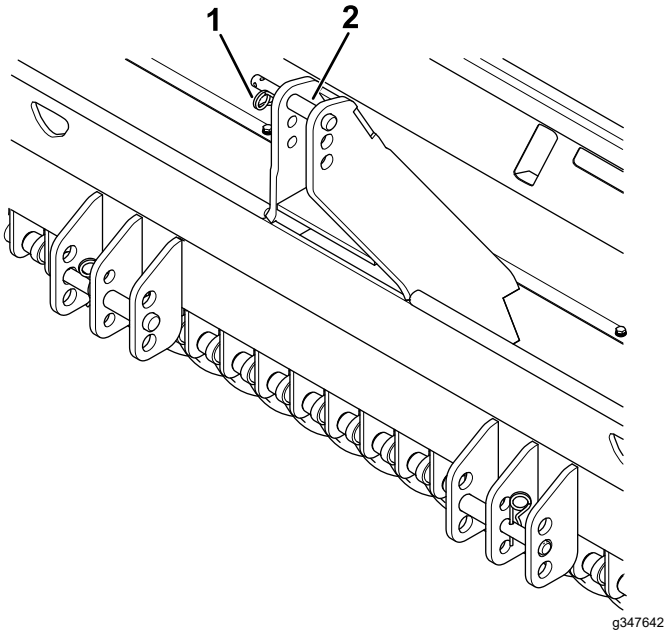

Figure 17

1. Hairpin cotter (3)
2. Hitch pin (3)

Maintenance

Recommended Maintenance Schedule(s)

Maintenance Service Interval	Maintenance Procedure
After the first 20 hours	• Grease the bearings. • Lubricate the chains. • Check for loose fasteners and tighten them as necessary.
Before each use or daily	• Wash the attachment. • Check for loose fasteners and tighten them as necessary. • Check the condition of the slicing discs.
Every 100 hours	• Perform the seed distribution test. • Grease the bearings. • Check the grease level in the gearbox. • Clean the seed tray. • Check the slicing discs for dirt and/or damage. • Check the sowing pipes and/or funnels. • Check the chain tension. • Check the tension of the chain. • Lubricate the chains. • Check for loose fasteners and tighten them as necessary.
Yearly or before storage	• Touch up chipped paint.

⚠ CAUTION

If you leave the key in the traction-unit switch, someone could accidently start the engine and seriously injure you or other bystanders.

Remove the key from the switch before you perform any maintenance.

Maintenance Safety

- Before adjusting, cleaning, servicing, or leaving the machine, do the following:
  - Position the machine on a level surface.
  - Move the throttle switch to the low-idle position.
  - Disengage the PTO (if applicable).
  - Ensure that the traction is in neutral.
  - Engage the parking brake.
  - Shut off the engine of the traction unit and remove the key.
  - Wait for all moving parts to stop.
  - Allow machine components to cool before performing maintenance.
- Perform only those maintenance instructions described in this manual. If major repairs are ever needed or assistance is desired, contact an authorized Bullseye distributor.
- Ensure that the machine is in safe operating condition by keeping nuts, bolts, and screws tight.
- If possible, do not perform maintenance while the engine is running. Keep away from moving parts.
- Carefully release pressure from components with stored energy.
- Support the machine with blocks or storage stands when working beneath it. Never rely on the hydraulic system to support the machine.
- Never crawl under the attachment. If necessary, tilt the attachment.
- Ensure that all guards are installed and secured after maintaining or adjusting the machine.
- To ensure safe, optimal performance of the machine, use only genuine Bullseye replacement parts. Replacement parts made by other manufacturers could be dangerous, and such use could void the product warranty.

Greasing the Bearings

Service Interval: After the first 20 hours

Every 100 hours

Add Number 2 lithium grease to the roller bearings on each side of the machine (Figure 18). Wipe away any excess grease.

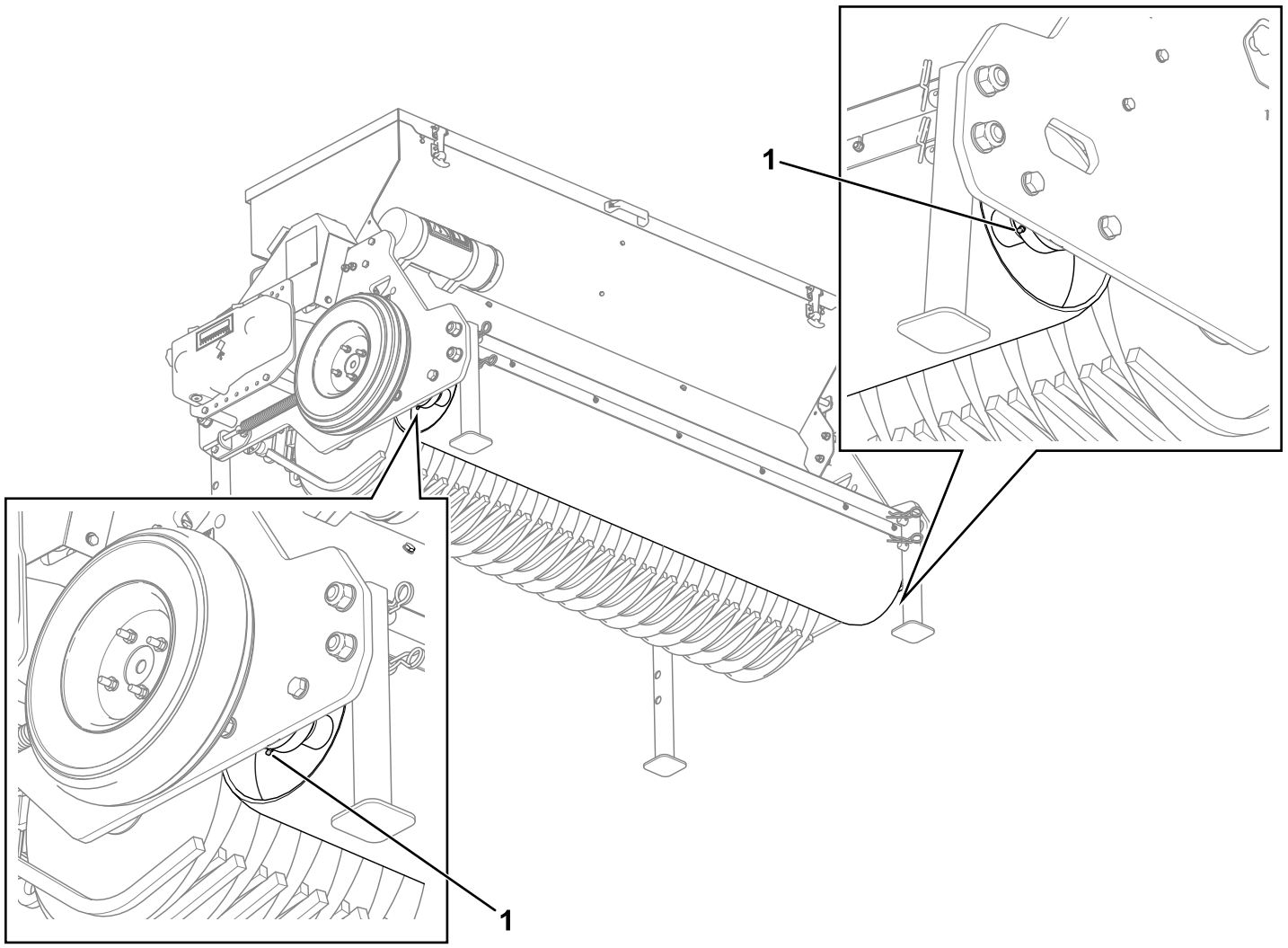

g345147

Figure 18

1. Bearings

Checking the Grease Level in the Gearbox

Service Interval: Every 100 hours

Grease specification: 80W-90

1. Remove the fill plug (Figure 19) from the side of the gearbox.

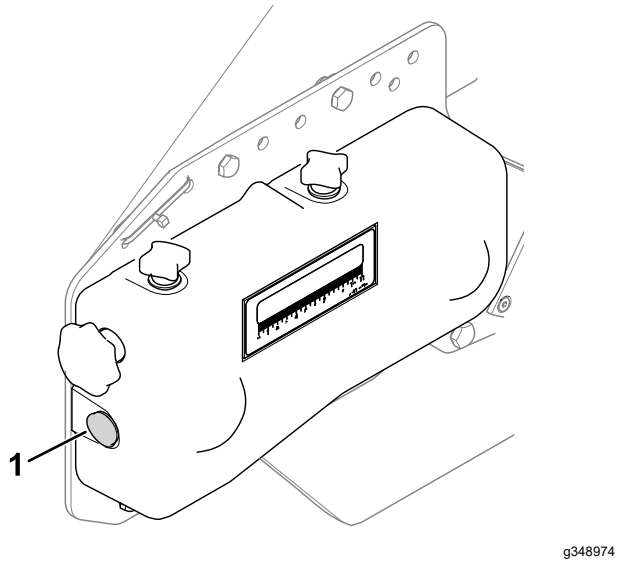

g348974

Figure 19

1. Fill plug

2. Check the grease level in the gearbox.

   If the grease level does not reach the fill-plug level, add more of the specified grease until it reaches the fill-plug level.

3. Install the fill plug to the gearbox.

Checking the Tire Pressure

Tire pressure specification: 1 to 2 bar (14.5 to 29 psi)

Check the air pressure in the tire (Figure 20). Add or remove air as needed to set the air pressure in the tire to the tire-pressure specification.

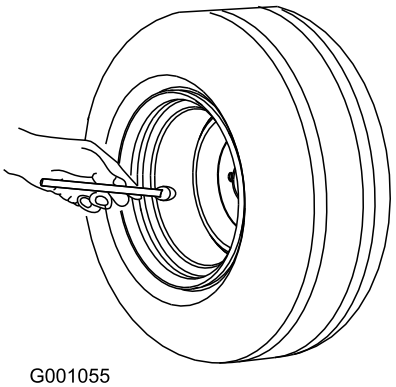

G001055

g001055

Figure 20

Cleaning the Seed Tray

Service Interval: Every 100 hours

Clean the seed tray (Figure 17) using air. If possible, do not use water.

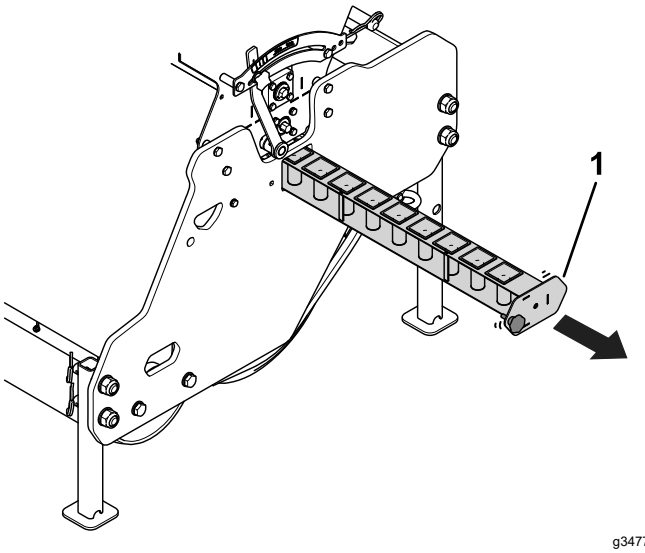

g347767

Figure 21

1. Seed tray

Washing the Attachment

Wash the attachment as needed using compressed air, if possible. Use water as little as possible to clean the attachment. You may use a rag when washing the attachment.

Important: **Do not use brackish or reclaimed water to clean the attachment.**

Important: **Do not use power-washing equipment to wash the attachment. Power-washing equipment may loosen important decals or wash away necessary grease at friction points.**

Storage

Storage Safety

- Park the machine on a level surface, shut off the engine, wait for all moving parts to stop, engage the parking brake, and allow the machine to cool before storing it.
- Do not store the machine or fuel near flames or drain the fuel indoors.

Storing the Machine

1. Wash the attachment; refer to Washing the Attachment (page 17).
2. Check and tighten all bolts, nuts, and screws. Repair or replace any part that is damaged.
3. Paint all scratched or bare metal surfaces with paint from an authorized Bullseye distributor.
4. Store the machine on a level surface in a clean, dry garage or storage area.
5. Cover the machine to protect it and keep it clean.

Troubleshooting

Problem	Possible Cause	Corrective Action
No seeds come out of the machine.	1. The seeds are damp and stick to each other. 2. The gearbox is set incorrectly. 3. The seed flap is set incorrectly. 4. No seeds in the seed tray. 5. The air cleaner is dirty. 6. Sowing pipes or funnels are blocked or dirty.	1. Use dry seeds. 2. Set the gearbox to the correct setting. 3. Set the seed flap to the correct setting. 4. Check and top up. 5. Clean or replace the air-cleaner elements. 6. Rectify or clean the blockage.
The seeds are not in the sow trench.	1. Slicing discs are worn out. 2. Wrong working depth. 3. Soil is too wet. 4. Ground is too hard. 5. Attaching tension of the tractor is too low. 6. Top rod is adjusted incorrectly. 7. Too much felt in the top layer of the field. 8. Not enough weight is on the machine.	1. Replace the slicing discs. 2. Adjust the working depth of the machine. 3. Postpone the treatment until the conditions are better. 4. Aerate or give water and postpone sowing until later. 5. Put towing arms in a higher hole. 6. Adjust the top rod correctly. 7. Remove the felt. 8. Add more accessory weight on the machine.
Too many seeds come out of the machine.	1. The seed flap setting is incorrect. 2. Gearbox setting is too high.	1. Adjust the seed flap setting. 2. Set the gearbox to the correct setting.
Sow trenches are shaped poorly.	1. Worn-out slicing discs 2. Slicing discs do not rotate or become stuck. 3. Bearings of the slicing discs are worn out. 4. Poor ground conditions. 5. Top rod is adjusted incorrectly.	1. Replace the slicing discs. 2. Adjust the top rod correctly. 3. Replace the bearings 4. Decrease the working depth. Aerate or give water and repeat sowing later. 5. Adjust the top rod correctly.
Sow trenches are not closed.	1. Trenches are too wide. 2. Ground is too hard.	1. Decrease the working depth. 2. Aerate or give water and postpone sowing until later.

Notes:

Notes:

Notes:

Warranty Statement

One-Year Limited Warranty

Conditions and Products Covered

Your Bullseye product ("Product") is warranted to be free from defects in materials or workmanship for 1 year. Where a warrantable condition exists, we will repair the Product at no cost to you including diagnostics, labor, parts, and transportation. This warranty begins on the date the Product is delivered to the original retail purchaser.

Instructions for Obtaining Warranty Service

You are responsible for notifying the distributor or authorized dealer from whom you purchased the Product as soon as you believe a warrantable condition exists. If you need help locating a distributor or authorized dealer, or if you have questions regarding your warranty rights or responsibilities, you may contact us at:

Bullseye Commercial Products Service Department
8111 Lyndale Avenue South
Bloomington, MN 55420-1196

952-888-8801 or 800-952-2740

Items and Conditions Not Covered

Not all product failures or malfunctions that occur during the warranty period are defects in materials or workmanship. This warranty does not cover the following:

- Product failures which result from the use of non-Bullseye replacement parts, or from installation and use of non-Bullseye branded accessories and products, or unapproved modifications to the Product, accessory, or replacement part.
- Product failures which result from failure to perform recommended maintenance and/or adjustments.
- Product failures which result from misusing the Product or using it in an abusive, negligent, or reckless manner.
- Parts consumed through use that are not defective. Examples of parts which are consumed, or used up, during normal Product operation include, but are not limited to, blades, reels, rollers and bearings (sealed or greasable), bed knives, spark plugs, castor wheels and bearings, tires, filters, belts, and discs, seed element castings, rotors, brushes, scrapers, fraze blades, rake tines, PTO's, and draw bars.
- Failures caused by outside influence, including, but not limited to, weather, natural disaster, storage practices, contamination, use of unapproved fuels, coolants, lubricants, additives, fertilizers, water, or chemicals.
- Failure or performance issues due to the use of fuels (e.g. gasoline, diesel, or biodiesel) that do not conform to their respective industry standards.
- Normal noise, vibration, wear and tear, and deterioration. Normal "wear and tear" includes, but is not limited to, damage to seats due to wear or abrasion, worn painted surfaces, scratched decals or windows.

Parts

Parts scheduled for replacement, as required maintenance, are covered for the same warranty period as the product warranty. Parts replaced under this warranty are covered for the duration of the original product warranty. Bullseye may retain all parts being replaced. Bullseye will make the final decision whether to repair any existing part or assembly or replace it. Bullseye may use remanufactured parts for warranty repairs.

Maintenance is at Owner's Expense

Engine tune-up, lubrication, cleaning and polishing, replacement of filters, coolant, and completing recommended maintenance are some of the normal services Bullseye products require that are at the owner's expense.

General Conditions

Repair by an Authorized Distributor or Dealer is your sole remedy under this warranty.

Neither Bullseye, nor any company involved in the manufacture, distribution, or sale of a Bullseye product shall be liable for indirect, incidental or consequential damages arising out of or related to the sale or use of the Product, including any cost or expense of providing substitute equipment or service during reasonable periods of malfunction or non-use pending completion of repairs under this warranty. Except for the emissions warranty referenced below, if applicable, there is no other express or implied warranty.

Some states do not allow exclusions of incidental or consequential damages, or limitations on how long an implied warranty lasts, so the above exclusions and limitations may not apply to you. This warranty gives you specific legal rights, and you may also have other rights which vary from state to state.

Note Regarding Emissions Warranty

The emissions control system on your Product may be covered by a separate warranty from the engine manufacturer, meeting requirements established by the U.S. Environmental Protection Agency (EPA) and/or the California Air Resources Board (CARB). The hour limitations set forth above do not apply to the emissions control system warranty. Refer to the engine emission control warranty statement supplied with your product or contained in the engine manufacturer's documentation.

California Proposition 65 Warning Information

What is this warning?

You may see a product for sale that has a warning label like the following:



WARNING: Cancer and Reproductive Harm—www.p65Warnings.ca.gov.

What is Prop 65?

Prop 65 applies to any company operating in California, selling products in California, or manufacturing products that may be sold in or brought into California. It mandates that the Governor of California maintain and publish a list of chemicals known to cause cancer, birth defects, and/or other reproductive harm. The list, which is updated annually, includes hundreds of chemicals found in many everyday items. The purpose of Prop 65 is to inform the public about exposure to these chemicals.

Prop 65 does not ban the sale of products containing these chemicals but instead requires warnings on any product, product packaging, or literature with the product. Moreover, a Prop 65 warning does not mean that a product is in violation of any product safety standards or requirements. In fact, the California government has clarified that a Prop 65 warning "is not the same as a regulatory decision that a product is 'safe' or 'unsafe.'" Many of these chemicals have been used in everyday products for years without documented harm. For more information, go to https://oag.ca.gov/prop65/faqs-view-all.

A Prop 65 warning means that a company has either (1) evaluated the exposure and has concluded that it exceeds the "no significant risk level"; or (2) has chosen to provide a warning based on its understanding about the presence of a listed chemical without attempting to evaluate the exposure.

Does this law apply everywhere?

Prop 65 warnings are required under California law only. These warnings are seen throughout California in a wide range of settings, including but not limited to restaurants, grocery stores, hotels, schools, and hospitals, and on a wide variety of products. Additionally, some online and mail order retailers provide Prop 65 warnings on their websites or in catalogs.

How do the California warnings compare to federal limits?

Prop 65 standards are often more stringent than federal and international standards. There are various substances that require a Prop 65 warning at levels that are far lower than federal action limits. For example, the Prop 65 standard for warnings for lead is 0.5 µg/day, which is well below the federal and international standards.

Why don't all similar products carry the warning?

- Products sold in California require Prop 65 labelling while similar products sold elsewhere do not.
- A company involved in a Prop 65 lawsuit reaching a settlement may be required to use Prop 65 warnings for its products, but other companies making similar products may have no such requirement.
- The enforcement of Prop 65 is inconsistent.
- Companies may elect not to provide warnings because they conclude that they are not required to do so under Prop 65; a lack of warnings for a product does not mean that the product is free of listed chemicals at similar levels.

Why do we include this warning?

Our company has chosen to provide consumers with as much information as possible so that they can make informed decisions about the products they buy and use. We provide warnings in certain cases based on its knowledge of the presence of one or more listed chemicals without evaluating the level of exposure, as not all the listed chemicals provide exposure limit requirements. While the exposure from our products may be negligible or well within the "no significant risk" range, out of an abundance of caution, we have elected to provide the Prop 65 warnings. Moreover, if we do not provide these warnings, it could be sued by the State of California or by private parties seeking to enforce Prop 65 and subject to substantial penalties.