Form No. 3461-799 Rev C

TORO®

Count on it.

Parts Catalog

eTimeMaster™ 76cm 60V

Lawn Mower

Model No. 21876T—Serial No. 400000000 and Up

Register at www.Toro.com.
Original Instructions (EN)

CE

3461-799 C

Ordering Replacement Parts

To order replacement parts, please supply the part number, the quantity, and the description of each part desired.

Understanding Reference Numbers

Each identified part in an illustration has a reference number. The reference number for a part also appears in the parts list, along with other information about the part.

This catalog uses two special reference number formats, one to indicate parts in a service assembly and another to indicate the quantity of a given part in an illustration.

Service Assembly Reference Numbers

Parts in service assemblies have reference numbers in the form a:b. The a represents the reference number of the entire service assembly and the b represents a sequential number unique to each part within the service assembly.

For example, a wheel assembly might be identified by reference number 6, the tire by 6:1, the valve by 6:2, and the wheel by 6:3. When you order the assembly identified by reference number 6, you receive all parts identified by reference numbers 6:1,6:2, and 6:3. However, you may also order any part individually. Reference numbers of this type appear in illustration and in parts lists.

Reference Numbers Indicating Quantity

In an illustration, if a reference number indicates more than one part, the reference number has the form nX y. The n represents the quantity of the part, the X is the multiplication symbol, and the y represents the reference number.

For example, in an illustration, the reference number 2X 37 means that two of the parts identified by reference number 37 are indicated.

Contents

Housing Assembly 4
Spindle and Belt Assembly 6
Side Discharge Chute Assembly 8
Bag Assembly 10
Motor Module and Belt Assembly 12
Motor Module Assembly No. 145-5881 14
Front Wheel and Height-of-Cut Assembly 16
Rear Wheel and Height-of-Cut Assembly 18
Handle Assembly 20
Attachments and Accessories 22

© 2023—The Toro® Company
8111 Lyndale Avenue South
Bloomington, MN 55420

Contact us at www.Toro.com.
Printed in the USA.
All Rights Reserved

Housing Assembly

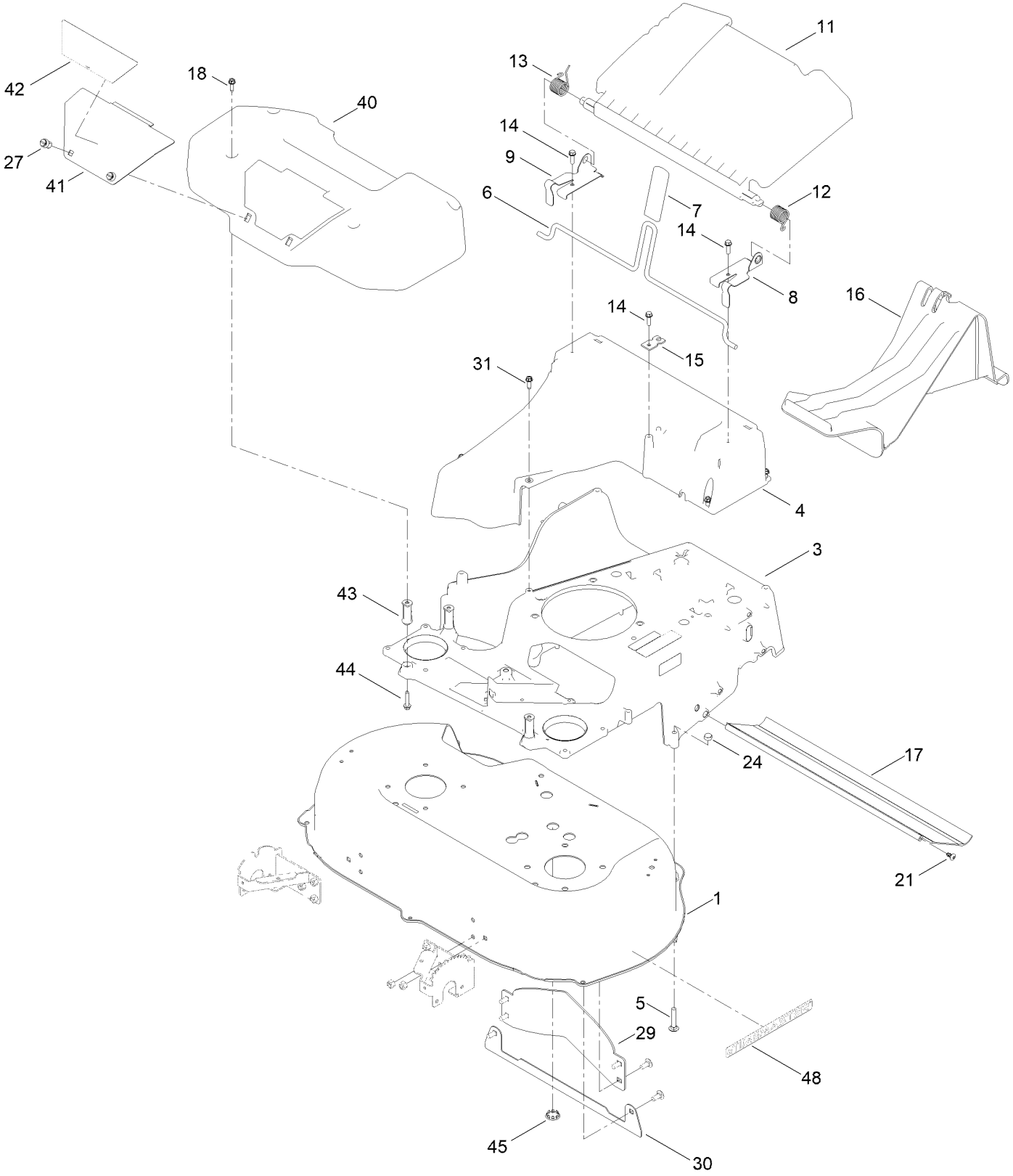

Housing Assembly (continued)

Ref.	Part Number	Qty.	Description
1	136-5874	1	Housing ASM
3	145-3985-01	1	Frame-30In, 60V
4	133-8177	1	Chute
5	137-3063	2	Bolt-Car
6	139-5415	1	Rod-Release, Handle
7	120-7018	1	Grip-Lever
8	121-9114	1	Bracket-Door, LH
9	121-9115	1	Bracket-Door, RH
11	145-3997	1	Rear Deflector ASM
12	115-2859	1	Spring-Torsion
13	114-7924	1	Spring-Torsion
14	137-3099	3	Screw-Plastite, HWH
15	138-3224	1	Bracket-Cable, Traction
16	120-5225	1	Plug-Mulch
17	120-6241	1	Shield-Trailing
18	49-2040	5	Screw-HWHTF
21	139-1692	2	Screw-PTH
24	119-4038	2	Nut-Hex
27	121-5840	2	Fastener
29	130-2352-01	1	Baffle-Control
30	125-5081-01	1	Plate-Deck
31	32144-86	1	Screw-HWHTF
40	145-5898	1	Cover-Belt
41	145-5899-03	1	Panel-Access
42	145-3999	1	Decal-Access Panel
43	140-3901	3	Spacer-Frame, 30 In.
44	108-4862	3	Screw-HWH Thd Roll
45	147-0471	1	Plug-Button
48	161-3153	1	Decal

Spindle and Belt Assembly

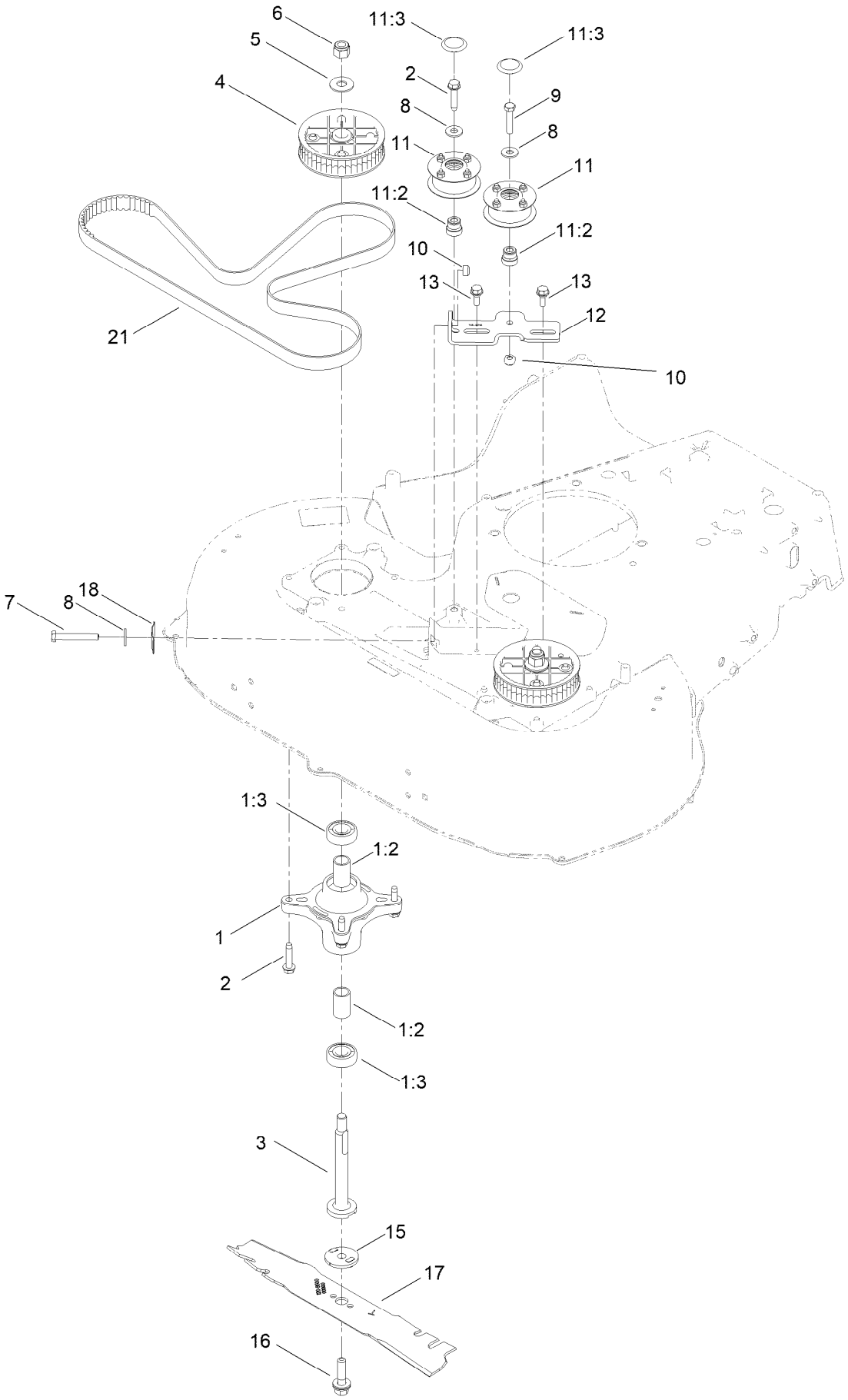

Spindle and Belt Assembly (continued)

Ref.	Part Number	Qty.	Description
1	121-9107	2	Spindle ASM
1:2	120-7935	2	Spacer
1:3	138-9770	2	Bearing-Ball
2	139-1731	9	Screw-Thd Roll, HWH
3	139-6612	2	Shaft-Spindle
4	121-9100	2	Sprocket
5	109-9505	2	Washer-Spring
6	139-1725	2	Nut-Hex
7	139-1728	1	Bolt-HH Ft
8	139-1723	2	Washer-Flat
9	120-2779	1	Screw-HH
10	119-4038	2	Nut-Hex
11	139-1758	2	Pulley Kit
11:2	131-4504	1	Adapter-Bore
11:3	125-2533	1	Plug-Cap
12	145-4016	1	Bracket-Idler
13	139-1730	2	Screw-Shoulder, HHF
15	120-5236	2	Adapter-Blade
16	125-2466	2	Bolt-Blade
17	145-4002-03	2	Blade-Rotary [black]
18	121-2336	1	Spring-Flat
21	145-4001	1	Belt-Synchronous

Side Discharge Chute Assembly

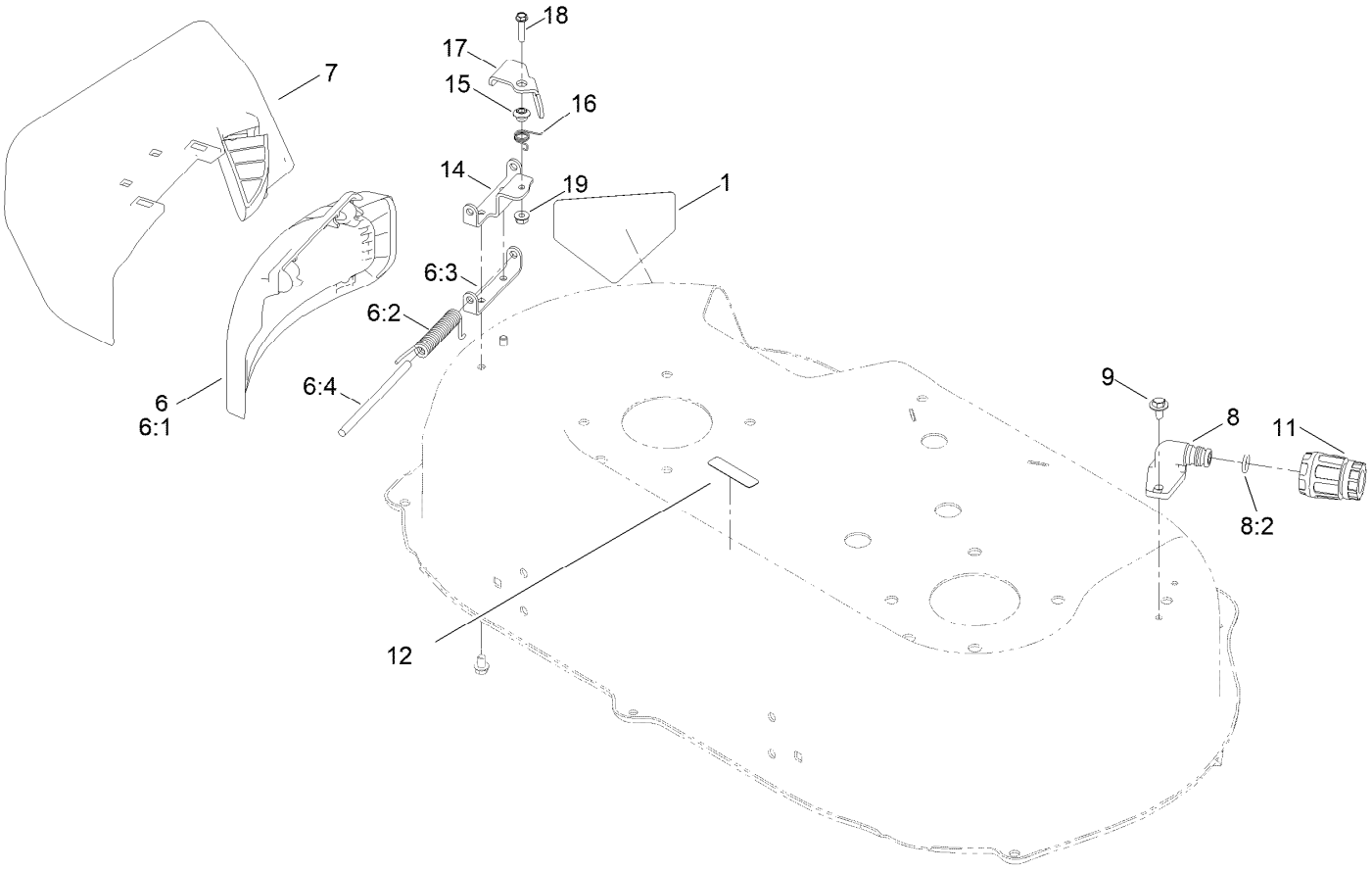

Side Discharge Chute Assembly (continued)

Ref.	Part Number	Qty.	Description
1	112-8760	1	Decal-Danger
6	138-5325	1	Side Deflector Service ASM
6:1	138-5317	1	Deflector-Discharge, Side
6:2	127-0721	1	Spring-Torsion, Cover
6:3	138-3293	1	Bracket-Lockout
6:4	99-5291	1	Rod-Cover
7	139-5416	1	Side Discharge Chute ASM
8	133-9289	1	Fitting-Washout
8:2	133-9290	1	O-Ring
9	139-1700	2	Screw-HWH, Thd Roll
11	95-3270	1	Connector-Hose
12	120-9570	1	Decal-Warning
14	138-3293	1	Bracket-Lockout
15	107-7463	1	Spacer
16	107-7462	1	Spring-Torsion
17	138-3292	1	Lever-Lockout
18	106-9169	1	Screw-HWH
19	139-1712	1	Nut-Hex Flange

Bag Assembly

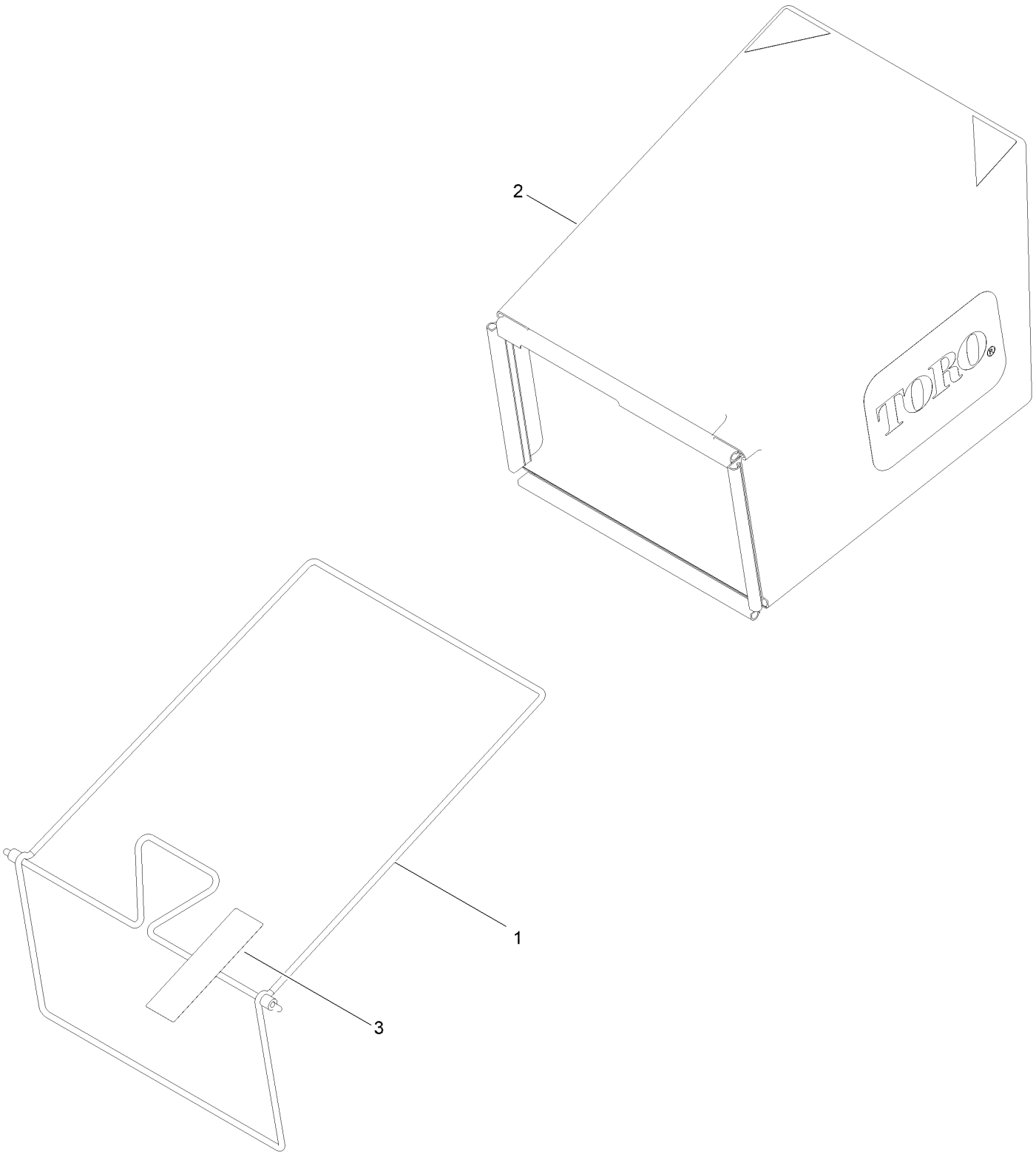

Bag Assembly (continued)

Ref.	*Part Number*	*Qty.*	*Description*
1	121-5766-03	1	Frame-Bag
2	121-5770	1	Bag-Grass
3	139-8986	1	Decal-Warning (Bag)

Motor Module and Belt Assembly

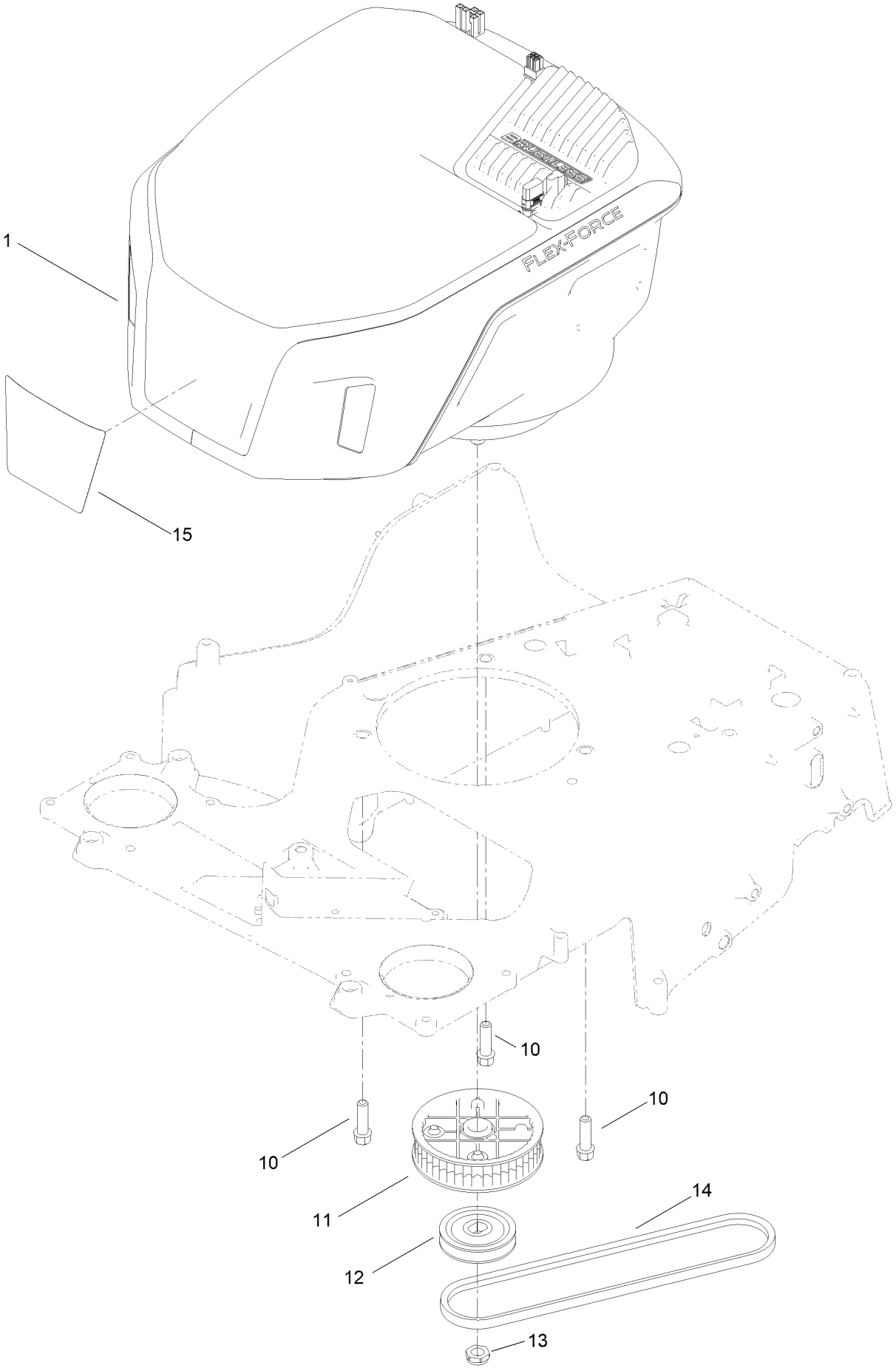

Motor Module and Belt Assembly (continued)

Ref.	Part Number	Qty.	Description
1	145-5881	1	Motor Module 60V
10	121-5844	3	Screw-Thd Form, HWH
11	121-9100	1	Sprocket
12	147-0431	1	Pulley-Traction
13	3296-28	1	Nut-Lock, NI
14	120-9470	1	V-Belt, Traction
15	161-3152	1	Decal-60V

Motor Module Assembly No. 145-5881

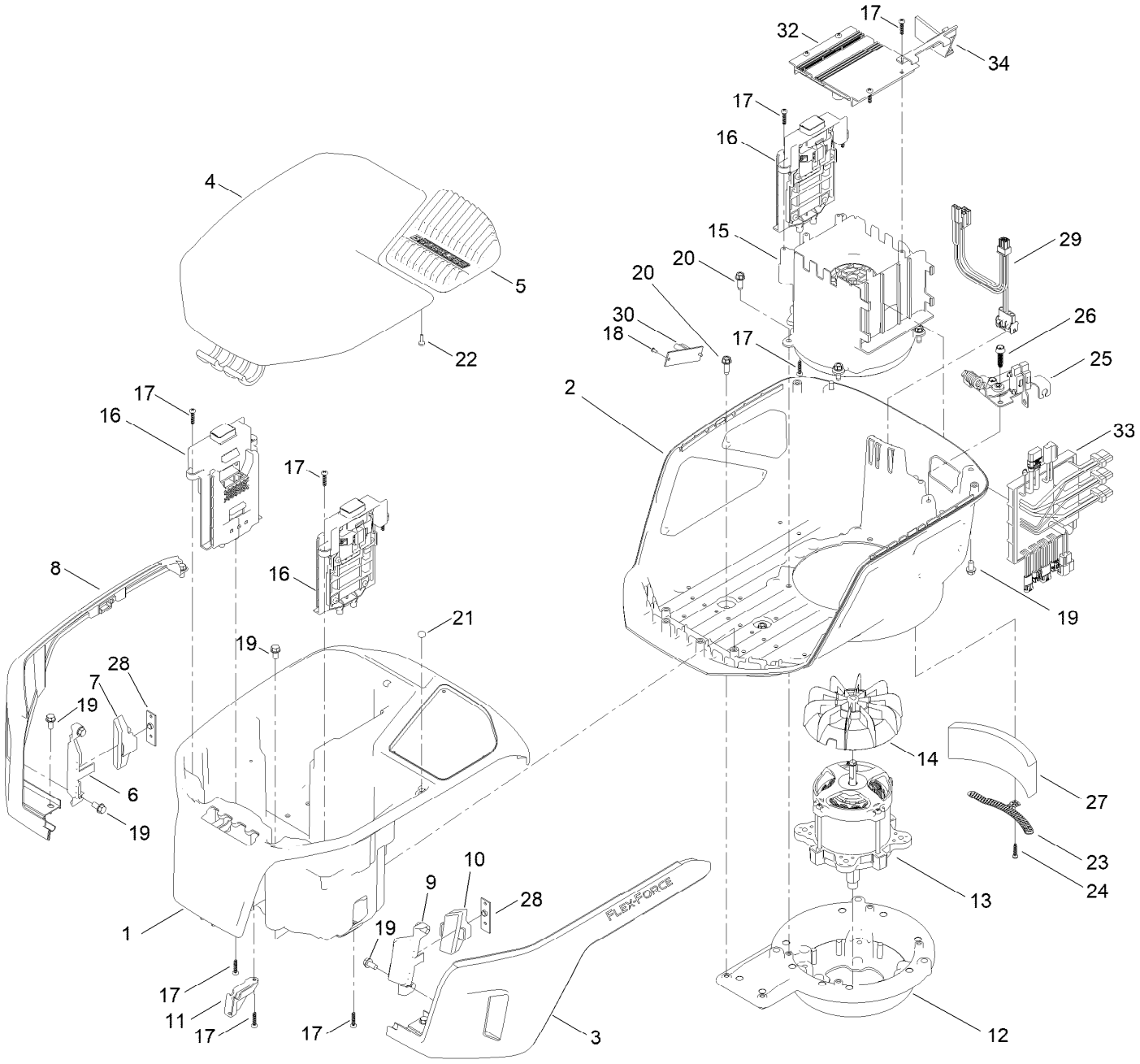

Motor Module Assembly No. 145-5881 (continued)

Ref.	Part Number	Qty.	Description
1	145-5882	1	Bucket-Battery
2	145-5883	1	Shroud-Lower
3	145-5884	1	Trim-Shroud, LH
4	145-5885	1	Lid-Motor
5	145-5886	1	Heatsink-Controller
6	145-5887	1	Lens-LED, RH
7	145-5888	1	Reflector-LED, RH
8	145-5889	1	Trim-Shroud, RH
9	145-5890	1	Lens-LED, LH
10	145-5891	1	Reflector-LED, LH
11	145-5892	2	Bracket-Support, Lid
12	145-5895	1	Mount-Base, Motor
13	145-4048	1	Motor-60V
14	145-5896	1	Fan-Motor
15	145-5897	1	Shroud-Motor
16	147-0403	3	Receiver-Battery
17	94-4496	20	Screw-PPH
18	112-8658	2	Screw-PPH
19	46-8093	12	Screw-Plastite
20	49-2040	6	Screw-HWHTF
21	114-5896	2	Magnet
22	95-4234	2	Screw-PPH
23	147-0449	1	Bracket-Foam
24	138-3273	1	Screw-Plastic, PPH
25	133-1918	1	Bail Switch ASM
26	130-6658	2	Screw-Flange, Plastic
27	145-3972	1	Foam
28	144-6448	2	Board-Light, LED
29	139-6637	1	Harness-Wire
30	145-1530	1	Driver-LED
32	147-0451	1	Controller-Pmu
33	147-0452	1	Controller-Motor
34	161-3110	1	Bracket-Pmu

Front Wheel and Height-of-Cut Assembly

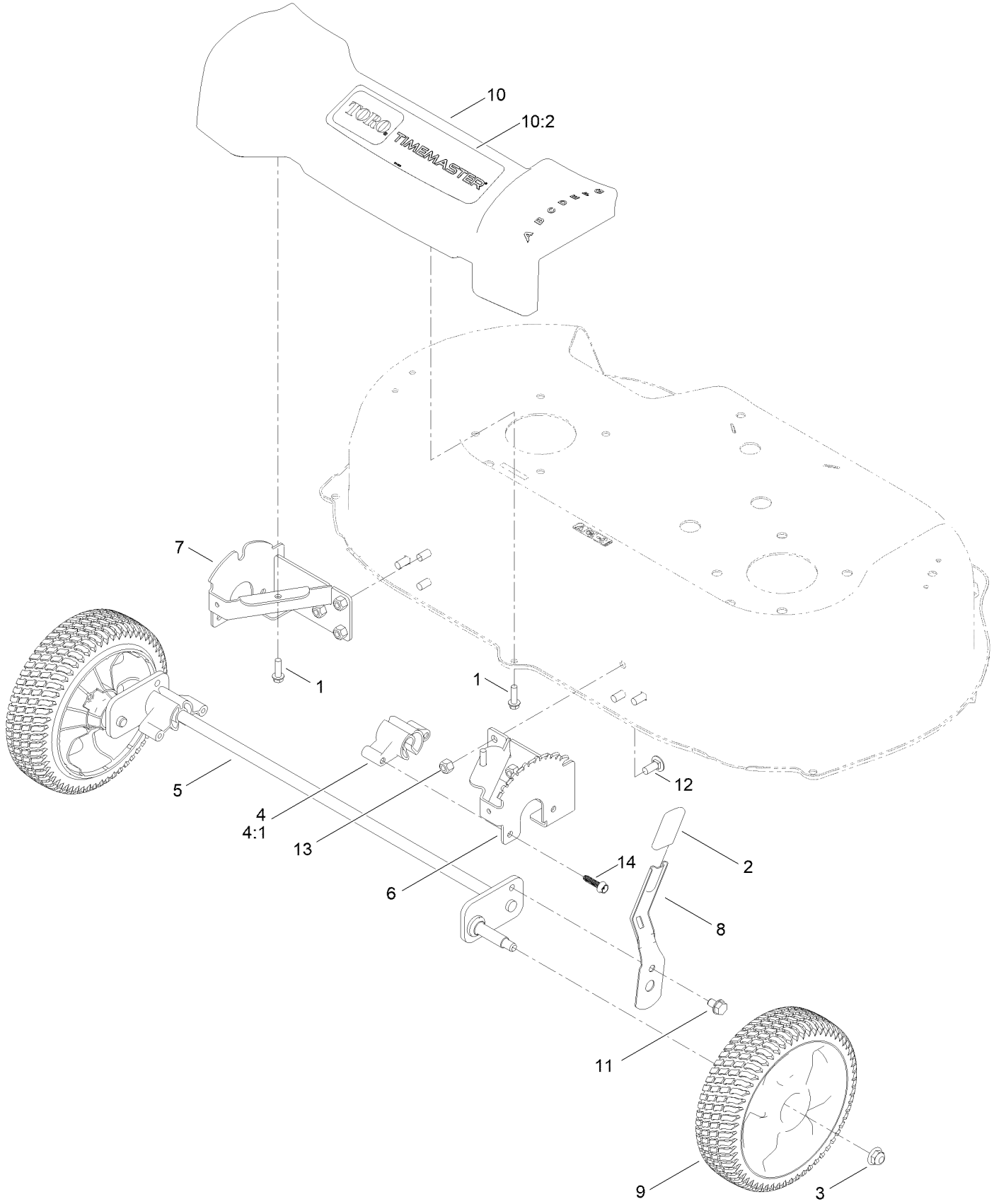

Front Wheel and Height-of-Cut Assembly (continued)

Ref.	Part Number	Qty.	Description
1	137-3099	3	Screw-Plastite, HWH
2	120-9535	1	Grip-Lever
3	119-4042	2	Nut-HF, NI
4	147-0519	2	Bushing-Pivot, Front
4:1	15-4318	1	Resin-Nylon 66
5	139-1753	1	Front Axle ASM
6	120-7037-03	1	Plate-HOC, LH
7	120-7038-03	1	Plate-HOC, RH
8	120-7043	1	Arm-Spring
9	125-2510	2	8 Inch Wheel ASM
10	161-4773	1	Front Cover ASM
10:2	147-0516	1	Decal-Cover, Front
11	139-1727	1	Screw-HWH, Thd Roll
12	137-3061	6	Bolt-CARR
13	119-4038	6	Nut-Hex
14	130-6658	4	Screw-Flange, Plastic

Rear Wheel and Height-of-Cut Assembly

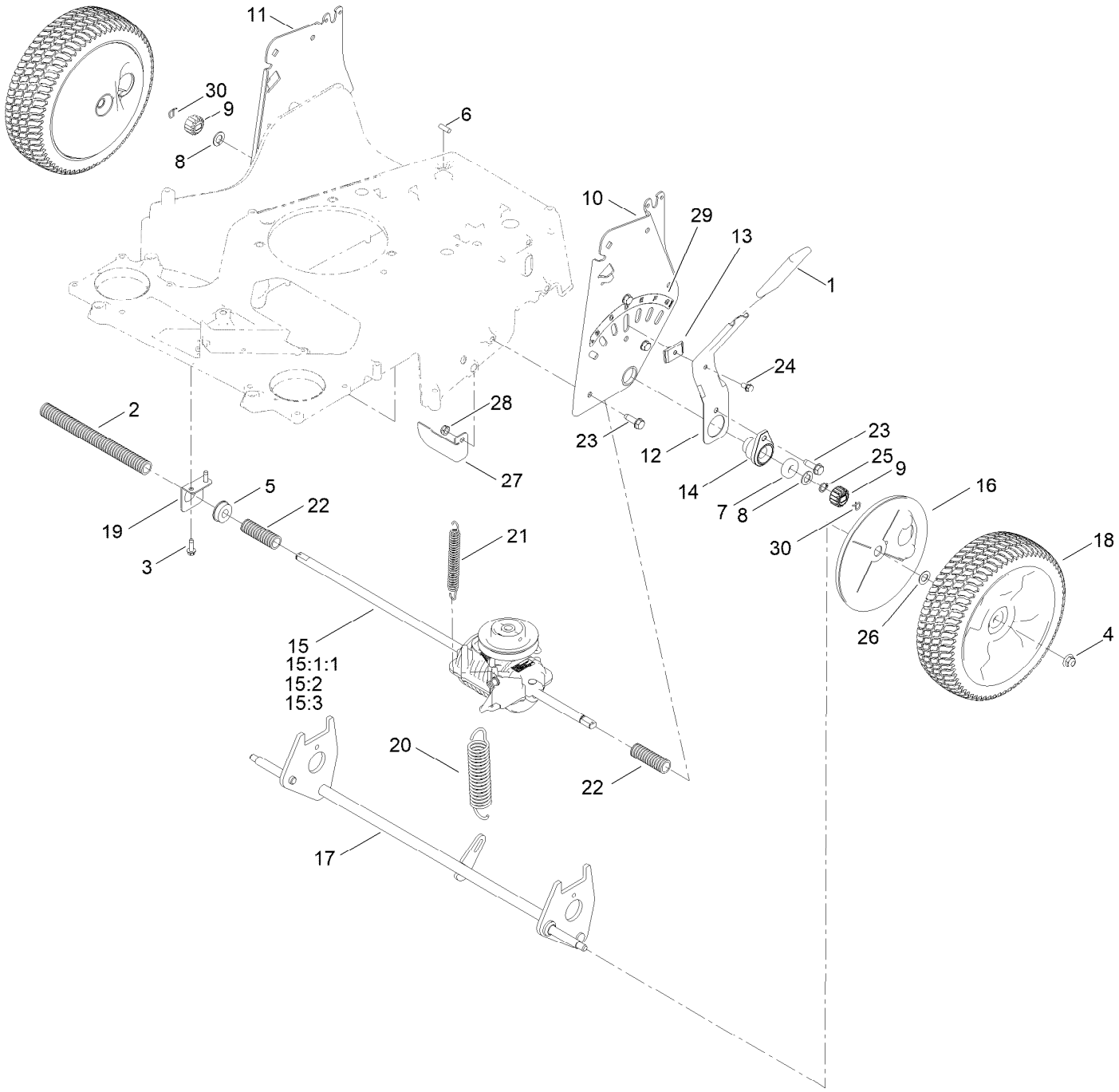

Rear Wheel and Height-of-Cut Assembly (continued)

Ref.	Part Number	Qty.	Description
1	137-4796	1	Grip-Lever, Lift
2	121-5799	1	Conduit-Convoluted
3	49-2040	2	Screw-HWHTF
4	119-4042	2	Nut-HF, NI
5	104-8699	1	Bearing-Ball
6	106-5681	1	Pin-Stop
7	133-2603	2	Bearing-Ball
8	110-7191	2	Washer-Thrust
9	131-5399	2	Gear-Pinion, 15T
10	120-3342-03	1	Plate-HOC, LH
11	120-3343-03	1	Plate-HOC, RH
12	137-9124	1	Arm-Spring
13	120-5209	1	Key-Arm, Spring
14	136-5929	2	Retainer-Bearing
15	131-9665	1	Transmission Kit
15:1:1	130-2370	1	Transmission Pulley Kit
15:2	130-2369	2	Pin-Snap
15:3	32151-61	1	Ring-Retaining
16	147-0404	2	Cover-Gear
17	147-0401	1	Rear Axle ASM
18	125-2509	2	10 Inch Wheel Gear ASM
19	138-3233	1	Mount-Bearing
20	120-7026	1	Spring-Extension
21	120-7027	1	Spring-Extension
22	121-5800	2	Conduit-Convoluted
23	701243	8	Screw-Thd Roll, HWH
24	32144-4	1	Screw-HWH
25	32151-61	1	Ring-Retaining
26	36-4780	2	Washer-Plain
27	138-5338	1	Bracket-Stop
28	137-3089	1	Nut-Hex
29	125-2497	1	Decal-HOC, Rear
30	130-2369	2	Pin-Snap

Handle Assembly

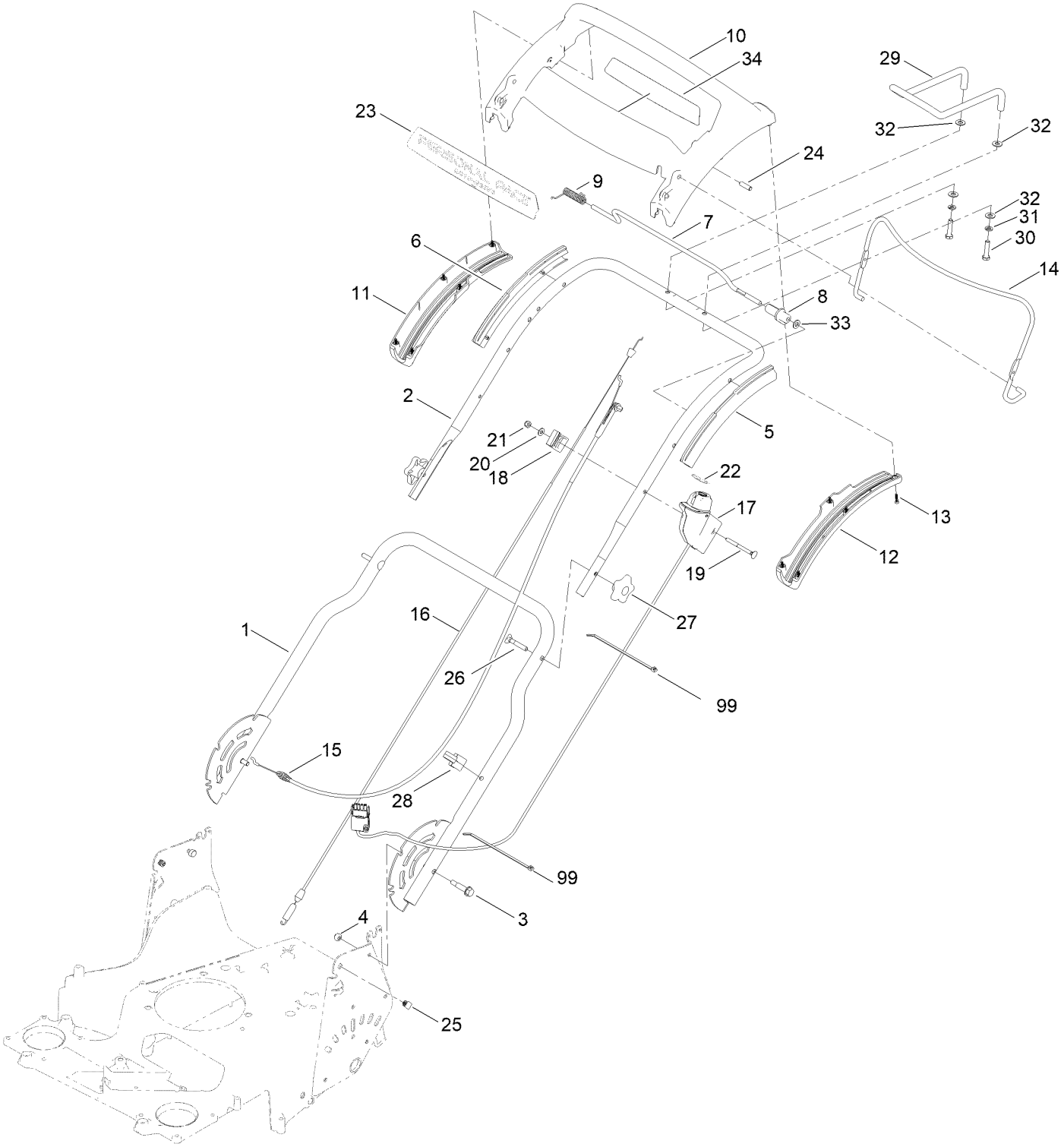

Handle Assembly (continued)

Ref.	Part Number	Qty.	Description
1	145-4021-05	1	Handle-Lower, ASM
2	145-4004-05	1	Handle-Upper
3	139-1694	1	Bolt-Shoulder, HHF
4	119-4038	2	Nut-Hex
5	140-2367	1	Guide-Curved, LH (Rwd)
6	140-2366	1	Guide-Curved, RH (Rwd)
7	139-5464	1	Rod-Control, Traction
8	139-6554	1	Lever-Traction, Rwd
9	140-4194	1	Spring-Torsion
10	139-6569	1	Handle-Personal Pace, Curved
11	139-6567	1	Bottom-Handle, RH
12	139-6568	1	Bottom-Handle, LH
13	94-4496	10	Screw-PPH
14	145-5879-03	1	Bail-Brake
15	139-6594	1	Cable-Brake, Pp B&s
16	145-4007	1	Cable-Traction
17	144-3179	1	Starter Switch ASM
18	140-4128	1	Clamp-Cable
19	92-2267	1	Screw-Handle
20	139-1699	1	Washer-Flat
21	137-3094	1	Nut-Hex
22	145-4009	1	Decal-Controls
23	145-5601	1	Decal-Handle, Pp
24	139-6577	1	Pin-Handle, Pp
25	132-4516	2	Plug-Square
26	137-3107	2	Screw-Handle
27	117-5976	2	Knob-Handle
28	114-7988	1	Guide-Cable
29	144-0249	1	Handle-Assist, Steel
30	137-3051	2	Screw-HH
31	136-8682	2	Washer-Lock
32	107-0279	4	Washer
33	120-9683	1	Washer-Plain
34	140-1324	1	Decal-Controls (60V, Start)
99	614249	2	Tie-Cable

Attachments and Accessories

For 21876T eTimeMaster 76cm 60V Lawn Mower

Product Name	Model/Part
Traction Assist Handle Kit	144-6377
Hi-Lift Replacement Blade Kit	20122P
Lawn Striping Kit with 30in Roller	20602
Power Clear 21in 60V Cordless (Bare Tool)	39901T
Bag-Walk Behind (Toro)	490-7318
Mower Cover	490-7461
60V Cordless Blower (Bare Tool)	51820T
60V Cordless Trimmer (Bare Tool)	51830T
60v 24in Max Hedge Trimmer (Bare Tool)	51840T
16in 60V Max Chainsaw (Bare Tool)	51850T
60V LI-ION Battery 10.0 AH	66810
60V Battery Charger 2 Amp CE	81802
60V 6.0 AH Battery CE	81860
60V 7.5 AH Battery CE	81875

Notes:



Count on it.