Customer Service Bulletin
Commercial Business Group

Greensmaster® 1000 \ 1600

Model/Serial Range:	Model Number:	Serial Numbers:
	04059	00000-99999

Subject: Light Kit (04059) Rework.

Light Kit (04059) was designed with a Flat Belt to drive the generator. If any misalignment between the Engine and Generator pulley exists, the belt can fail prematurely. All Light Kits (04059) will be reworked by your TORO distributor by installing Pulley Update Kit (98-5923). This kit will include a new 2L section V-belt and V-pulleys to replace the Flat Belt and Flat Pulleys. Contact your local TORO distributor to arrange for repairs.

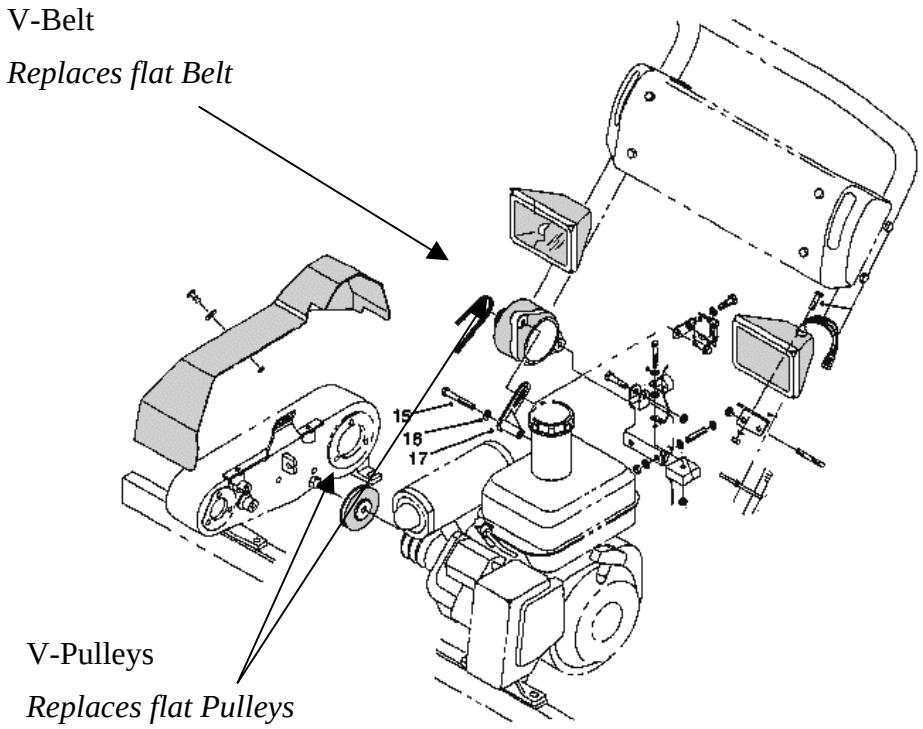

Ref: 18-02.doc Copyright©, 1999. The Toro Company