Form No. 3465-560 Rev A

TORO®

Count on it.

Parts Catalog

21in Power Clear® Flex-Force Power System™ 60V MAX Commercial

Snowthrower

Model No. 39922T—Serial No. 420000000 and Up

Register at www.Toro.com.
Original Instructions (EN)

3465-560 A

Ordering Replacement Parts

To order replacement parts, please supply the part number, the quantity, and the description of each part desired.

Understanding Reference Numbers

Each identified part in an illustration has a reference number. The reference number for a part also appears in the parts list, along with other information about the part.

This catalog uses two special reference number formats, one to indicate parts in a service assembly and another to indicate the quantity of a given part in an illustration.

Service Assembly Reference Numbers

Parts in service assemblies have reference numbers in the form a:b. The a represents the reference number of the entire service assembly and the b represents a sequential number unique to each part within the service assembly.

For example, a wheel assembly might be identified by reference number 6, the tire by 6:1, the valve by 6:2, and the wheel by 6:3. When you order the assembly identified by reference number 6, you receive all parts identified by reference numbers 6:1,6:2, and 6:3. However, you may also order any part individually. Reference numbers of this type appear in illustration and in parts lists.

Reference Numbers Indicating Quantity

In an illustration, if a reference number indicates more than one part, the reference number has the form nX y. The n represents the quantity of the part, the X is the multiplication symbol, and the y represents the reference number.

For example, in an illustration, the reference number 2X 37 means that two of the parts identified by reference number 37 are indicated.

Contents

Frame Assembly 4
Rotor and Rotor Drive Assembly 6
Motor and Controller Assembly 8
Chute Assembly 10
Handle and Control Assembly 12
Attachments and Accessories 14

© 2026—The Toro® Company
8111 Lyndale Avenue South
Bloomington, MN 55420

Contact us at www.Toro.com.
Printed in the USA.
All Rights Reserved

Frame Assembly

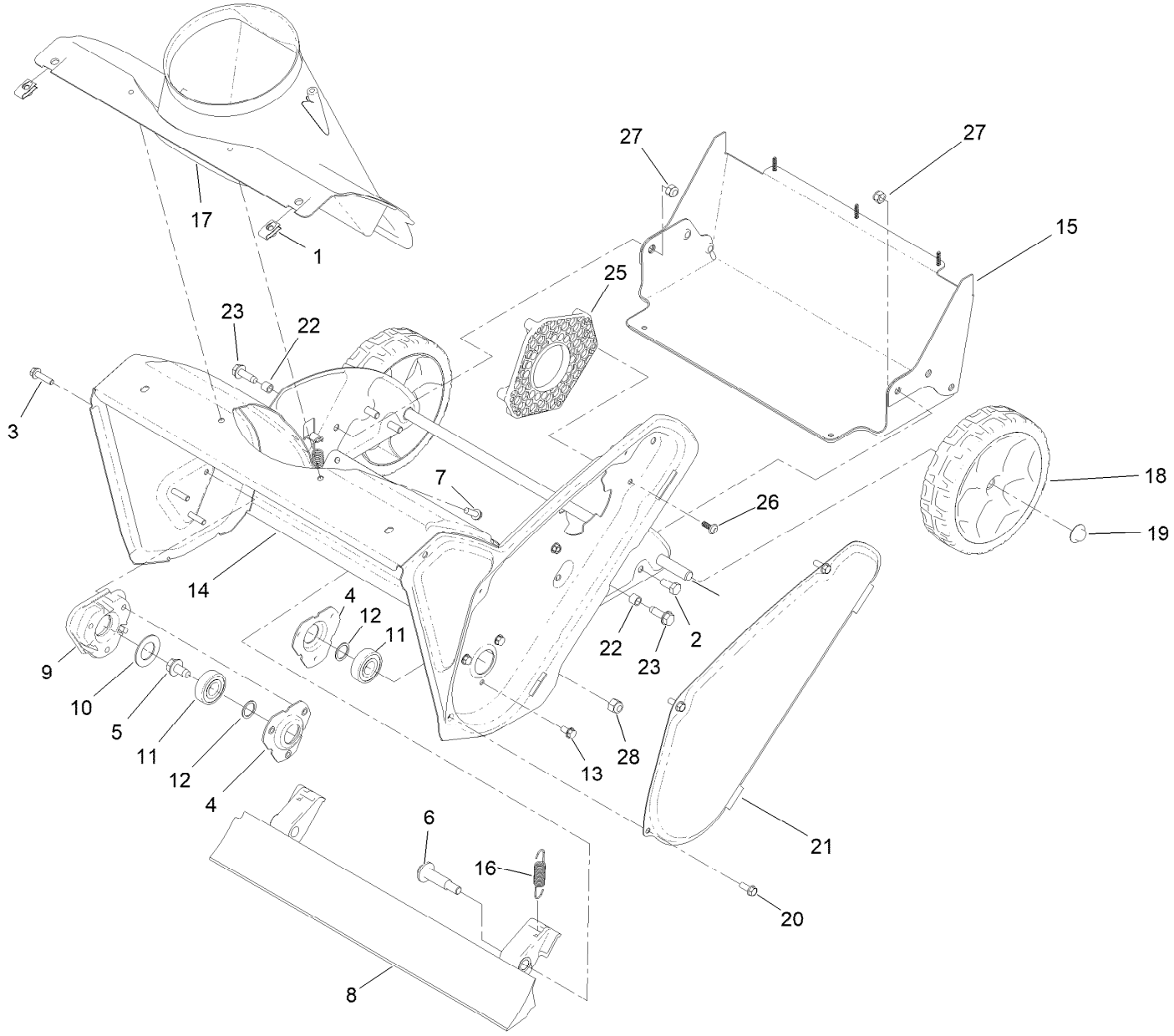

Frame Assembly (continued)

Ref.	Part Number	Qty.	Description
1	107069	2	Clip
2	137-3052	4	Screw-HH
3	32144-86	3	Screw-HWHTF
4	136-7134	2	Flange-Bearing
5	110-9380	1	Screw-HWH
6	136-7198	2	Bolt-Shoulder
7	46-8091	3	Screw-HWH
8	161-0963	1	Blade-Scraper, Pc21
9	114-3781	1	Spacer-Bearing, RH
10	110-9353	1	Washer-Rubber
11	161-3850	2	Bearing-Ball
12	52-7280	2	Washer-Thrust
13	32144-4	3	Screw-HWH
14	144-5865-03	1	Housing Rotor, ASM [black]
15	144-5855	1	Support, Large
16	147-9464	2	Spring-Extension
17	108-4871	1	Chute-Lower
18	138-8783	2	Wheel ASM, 7 Inch
19	32112-14	2	Nut-Push
20	32144-85	3	Screw-HWH Thd Form
21	108-4893-03	1	Cover-Belt
22	136-7148	2	Spacer-Grommet
23	130-9795	2	Screw-HWHTF
25	147-6555	1	Mount - Motor
26	138-5775	3	Screw-Delta Point
27	3296-72	6	Nut-Lock, NI
28	137-3087	2	Nut-Hex

Rotor and Rotor Drive Assembly

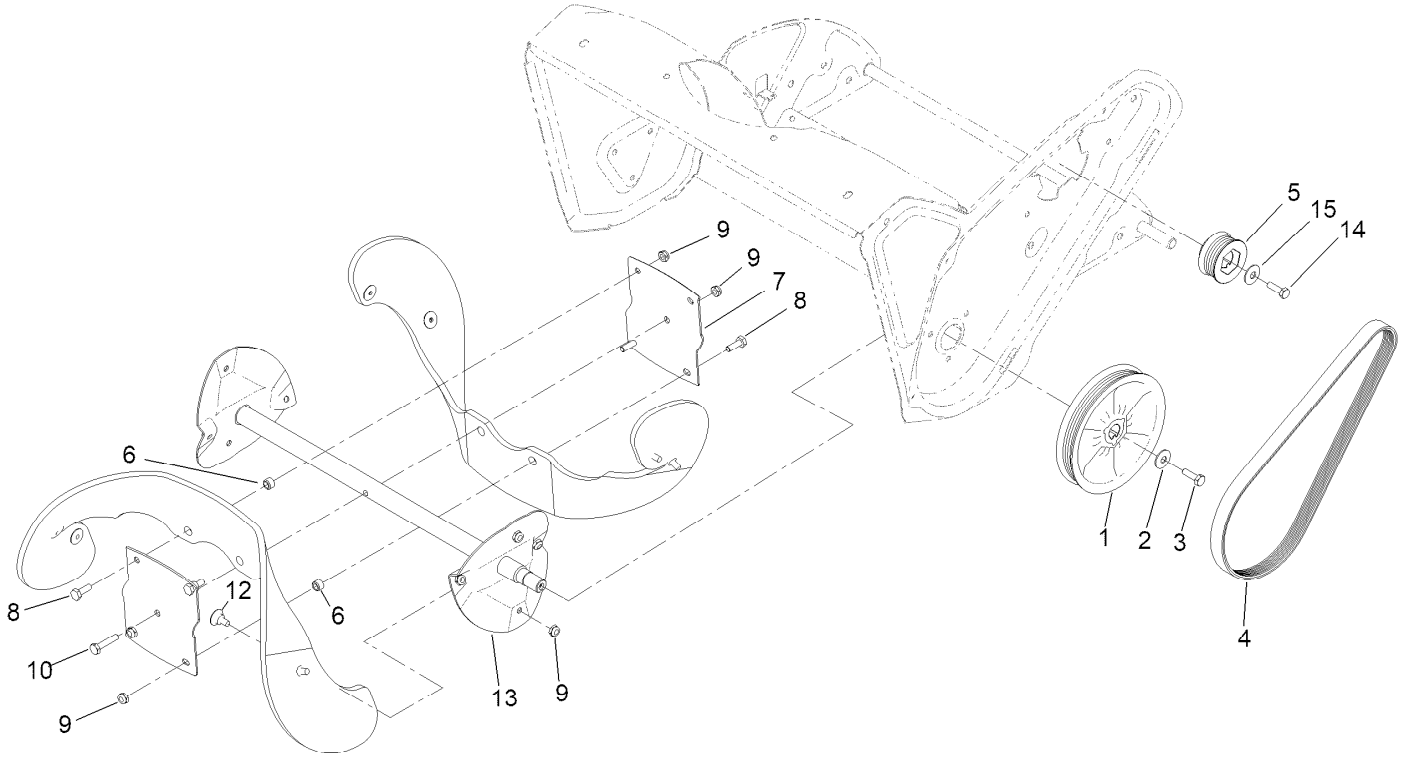

Rotor and Rotor Drive Assembly (continued)

Ref.	Part Number	Qty.	Description
1	138-8720	1	Pulley-Rotor
2	3290-456	1	Washer-Belleville
3	140-1002	1	Screw-HH,Patch
4	147-1768	1	Belt-V, Ribbed Stretch
5	147-1760	1	Pulley-Driver (Mach)
6	136-7167	4	Spacer-Blade, Rotor
7	66-6600-03	2	Half-Rotor
8	321-5	4	Screw-HH
9	3296-56	13	Nut-Lock, NI
10	321-8	1	Screw-HH
12	125-1122	8	Screw
13	131-6488-03	1	Rotor
14	3211-4	1	Screw-HH
15	137-3078	1	Washer-Plain

Motor and Controller Assembly

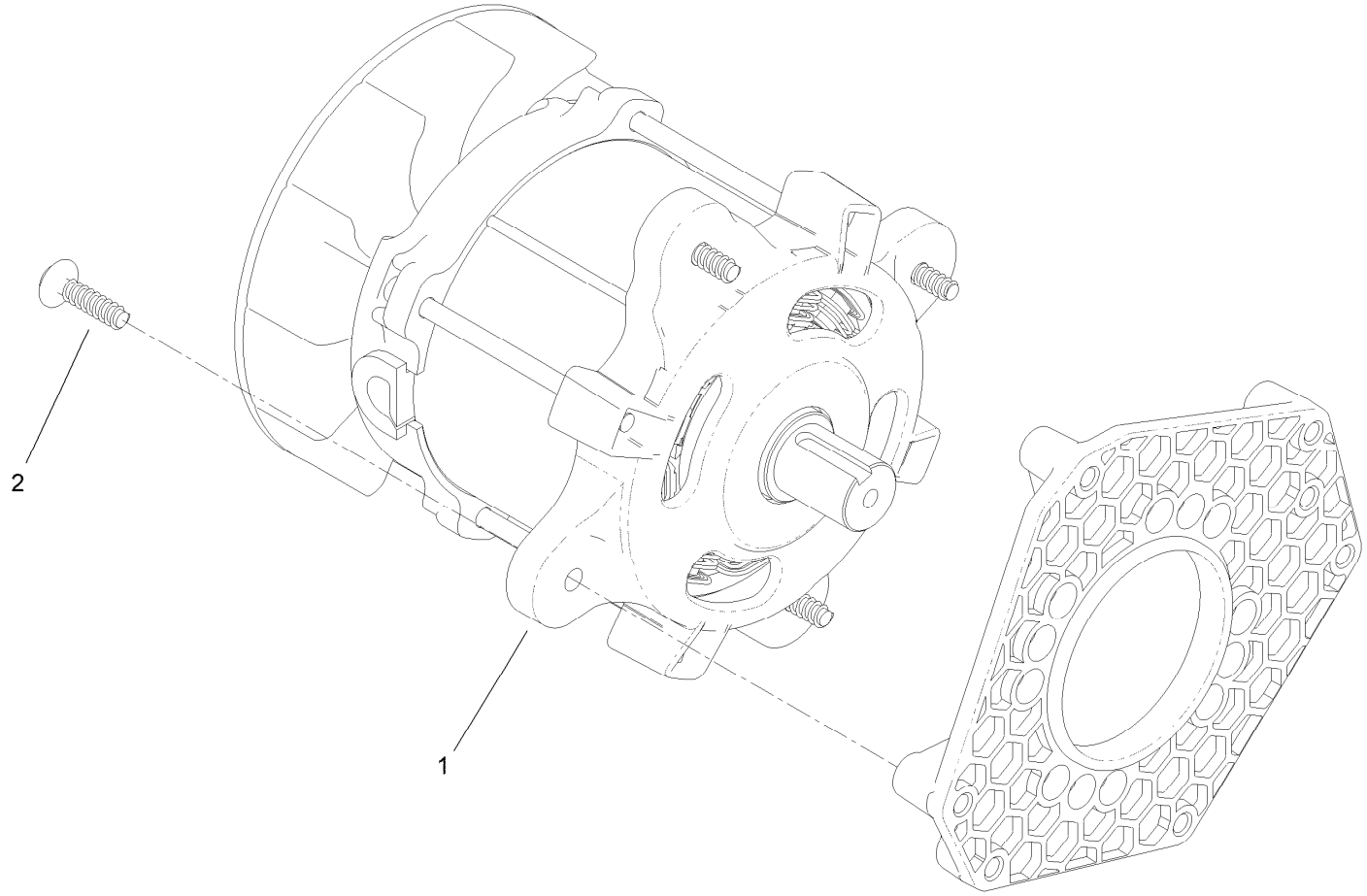

Motor and Controller Assembly (continued)

Ref.	*Part Number*	*Qty.*	*Description*
1	147-1766	1	Motor- E21Sp
2	120-2349	4	Screw

Chute Assembly

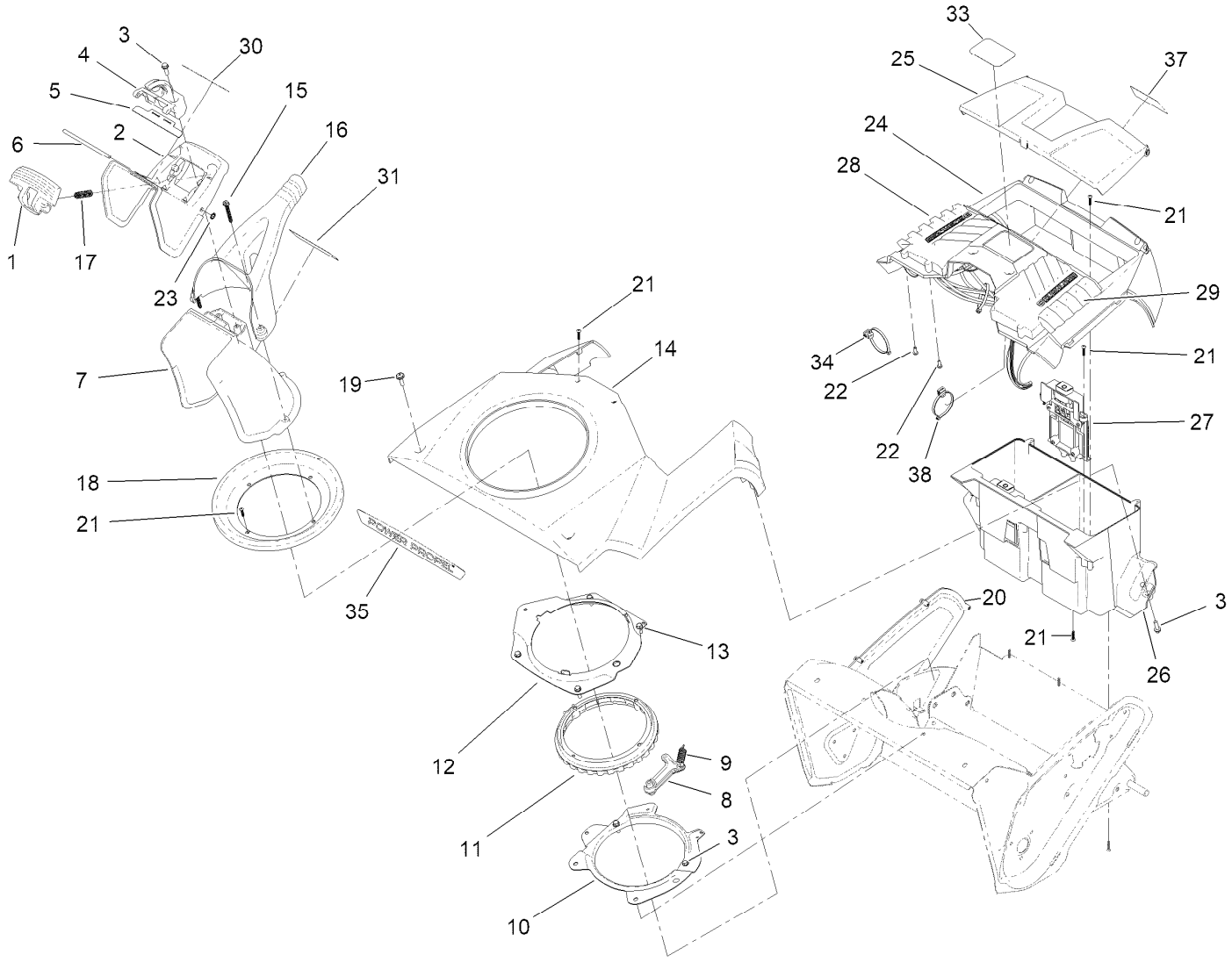

Chute Assembly (continued)

Ref.	Part Number	Qty.	Description
1	108-4941	1	Trigger-Deflector
2	147-1796	1	Deflector-Chute,
3	46-8091	8	Screw-HWH
4	108-4942	1	Hinge-Ratchet, Deflector
5	114-3790	1	Seal-Deflector
6	136-8672	1	Pin-Hinge, Deflector
7	108-4939	1	Chute
8	108-4926	1	Pawl-Detent
9	80-4600	1	Spring-Extension
10	108-4883-03	1	Ring-Support, Chute
11	108-4922	1	Ring-Chute, Detent
12	108-4874-03	1	Retainer-Ring, Chute
13	32144-85	3	Screw-HWH Thd Form
14	144-4146	1	Shroud
15	114-3751	3	Screw-HWH, Plastite
16	110-9366	1	Handle-Chute
17	136-7136	2	Spring-Compression
18	114-3772	1	Seal-Ring, Chute
19	110-9361	2	Screw-PPH
20	138-8754	1	Cover-Side
21	94-4496	18	Screw-PPH
22	3250-12	6	Screw-PPH
23	104-8310	1	Ring-Retaining
24	161-0971	1	Cover-Housing
25	144-4147	1	Cover-Battery Bucket
26	144-5856	1	Battery Bucket
27	147-1788	2	Battery Track ASM (60A)
28	161-2150	1	Parallel Module-Controller E21Sp
29	161-2149	1	Motor Controller- E21Sp
30	147-9420	1	Decal-Danger
31	114-9035	1	Decal-Danger, Discharge
33	145-8255	1	Decal - 60V Powerhead, E21Sp
34	32180-226	2	Clip-Edge, Top Parallel
35	161-5983	1	Decal-Revolution
37	147-1787	1	Decal-Battery Bucket
38	32180-225	1	Clip-Edge, Top-Perpendicular

Handle and Control Assembly

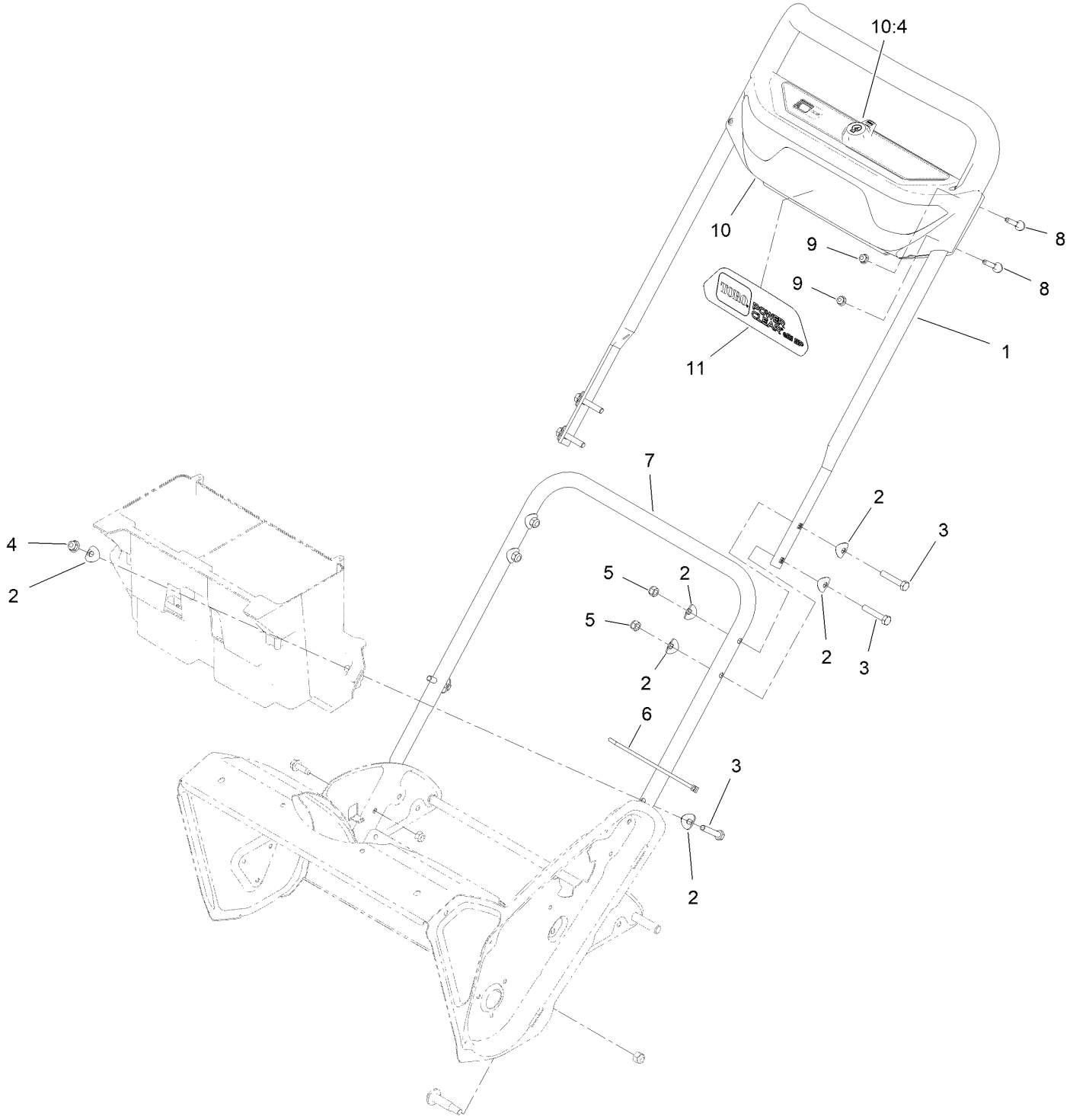

Handle and Control Assembly (continued)

Ref.	Part Number	Qty.	Description
1	147-1756	1	Handle Bar-Upper ASM
2	137-3009	12	Washer-Cup
3	125-7944	6	Screw-HH
4	138-8401	2	Nut-HF
5	3296-72	4	Nut-Lock, NI
6	614249	1	Tie-Cable
7	144-5868-03	1	Handle-Lower
8	117-7737	4	Screw-Handle
9	104-7201	4	Nut-HF, NI
10	161-2158	1	Dash Panel Assembly, 60V Snow
10:4	139-5255	1	Key-Bail
11	147-6556	1	Decal - Power Clear Pro

Attachments and Accessories

For 39922T — 21in Power Clear Flex-Force Power System 60V MAX Commercial Snowthrower

Product Name	Model/Part
60V Battery Charger 2 AMP	88602
60V Rapid Battery Charger 5.4 AMP	88605
60V Battery Charger 1 AMP	88610
60V Battery 2.0 AH	88620
60V LI-ION Battery 2.5 AH	88625
60V LI-ION, Battery 4.0 AH	88640
60V LI-ION Battery 5.0 AH	88650
60V LI-ION Battery 6.0 AH	88660
60V LI-ION Battery 7.5 AH	88675

Notes:



Count on it.