Form No. 3435-227 Rev B

TORO®

Count on it.

Parts Catalog

QAS Flex™ Tooth Rake

Sand Pro®/Infield Pro® 3040 and 5040 Traction Unit

Model No. 08767—Serial No. 404800000 and Up

Register at www.Toro.com.
Original Instructions (EN)

CE

3435-227 B

Ordering Replacement Parts

To order replacement parts, please supply the part number, the quantity, and the description of each part desired.

Understanding Reference Numbers

Each identified part in an illustration has a reference number. The reference number for a part also appears in the parts list, along with other information about the part.

This catalog uses two special reference number formats, one to indicate parts in a service assembly and another to indicate the quantity of a given part in an illustration.

Service Assembly Reference Numbers

Parts in service assemblies have reference numbers in the form a:b. The a represents the reference number of the entire service assembly and the b represents a sequential number unique to each part within the service assembly.

For example, a wheel assembly might be identified by reference number 6, the tire by 6:1, the valve by 6:2, and the wheel by 6:3. When you order the assembly identified by reference number 6, you receive all parts identified by reference numbers 6:1,6:2, and 6:3. However, you may also order any part individually. Reference numbers of this type appear in illustration and in parts lists.

Reference Numbers Indicating Quantity

In an illustration, if a reference number indicates more than one part, the reference number has the form nX y. The n represents the quantity of the part, the X is the multiplication symbol, and the y represents the reference number.

For example, in an illustration, the reference number 2X 37 means that two of the parts identified by reference number 37 are indicated.

Contents

Lift Arm and Hanger Assembly 4
Link Assembly No. 110-8105 6
Trowel Plate Assembly 8
Attachments and Accessories 10

© 2023—The Toro® Company
8111 Lyndale Avenue South
Bloomington, MN 55420

Contact us at www.Toro.com.
Printed in the USA.
All Rights Reserved

Lift Arm and Hanger Assembly

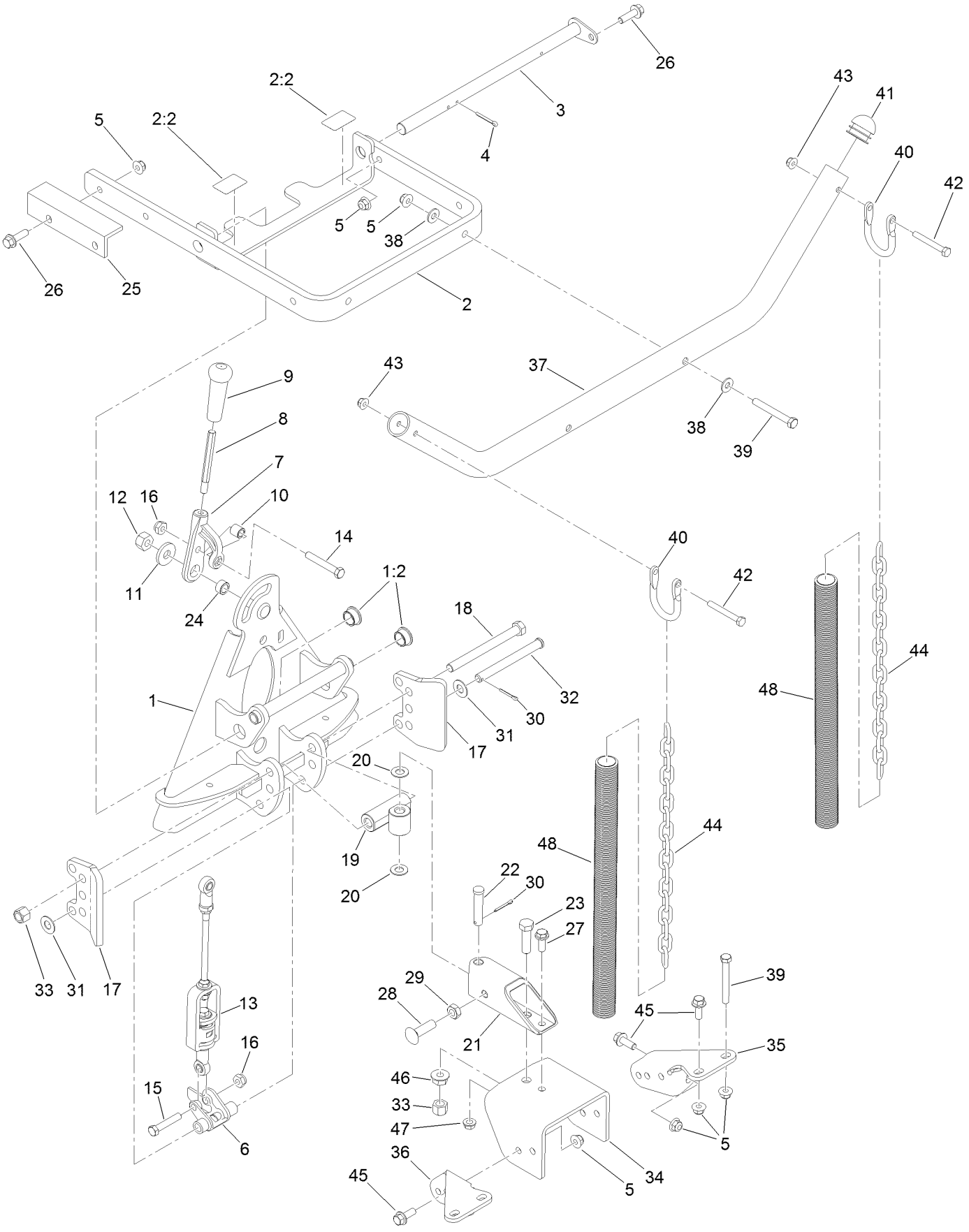

Lift Arm and Hanger Assembly (continued)

Ref.	Part Number	Qty.	Description
1	112-1403	1	Adapter ASM
1:2	27-9080	2	Bearing-Flange
2	130-7823	1	Arm-Lift
2:2	106-5517	2	Decal-Warning
3	110-3362	1	Bar-Pivot
4	3272-17	3	Pin-Cotter
5	104-8301	15	Nut-HF, NI
6	112-7686	1	Latch
7	112-7695-03	1	Handle
8	114-4320	1	Rod-Handle
9	99-7984	1	Knob-Soft Grip, Push-On
10	99-2058	1	Spacer-Support, Handle
11	92-2651	1	Washer
12	3296-25	1	Nut-Lock, NI
13	110-8105	1	Link ASM
14	323-12	1	Screw-HH
15	323-10	1	Screw-HH
16	3296-44	2	Nut-Lock, NI
17	120-3499-03	2	Bracket-Stop
18	325-22	1	Screw-HH
19	121-9065-03	1	Hitch ASM
20	47-2910	2	Washer-Thrust
21	121-9062-03	1	Tube-Tongue
22	92-2739	1	Pin-Clevis
23	325-7	1	Screw-HH
24	112-0038	1	Spacer
25	115-2090	1	Pad-Wear
26	3234-24	3	Screw-HHF
27	66-9300	1	Screw-HHF
28	3233-14	2	Screw-CARR
29	3218-5	2	Nut-Jam
30	3272-11	2	Pin-Cotter
31	110-6894	2	Washer-Pivot
32	100-5024	1	Pin-Clevis
33	119-8969	2	Nut-Hex
34	130-7839-03	1	Bracket-Adapter
35	127-7864-03	1	Bracket-Center Groomer, RH
36	127-7865-03	1	Bracket-Center Groomer, LH
37	130-7838-03	1	Tube-Lift
38	3256-3	4	Washer-Flat
39	323-14	4	Screw-HH
40	125-2446	2	Shackle
41	110-3469	2	Plug-Head, Ball
42	322-12	2	Screw-HH
43	104-8300	2	Nut-HF, NI
44	130-7840	2	Chain-Lift
45	3234-42	8	Screw-HHF
46	32128-49	1	Nut-HHF
47	3290-357	1	Nut-HSF
48	130-7841	2	Sleeve-Chain

Link Assembly No. 110-8105

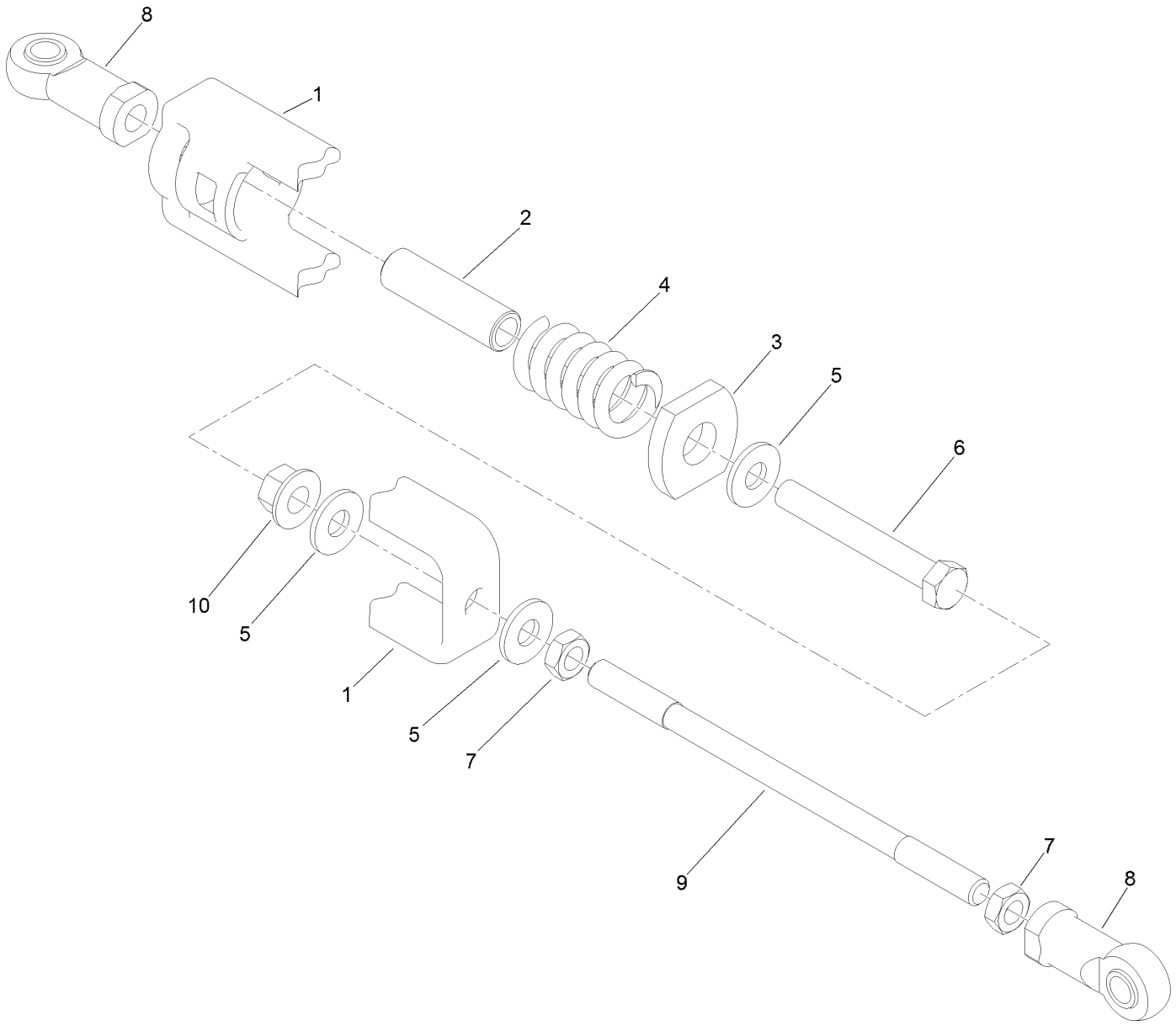

Link Assembly No. 110-8105 (continued)

Ref.	Part Number	Qty.	Description
1	115-6694	1	Yoke-Lift
2	110-8110	1	Spacer
3	110-8114	1	Washer
4	66-7230	1	Spring-Compression
5	3256-3	3	Washer-Flat
6	3211-12	1	Screw-HH
7	3220-3	2	Nut-HJ
8	92-7008	2	End-Rod, Female
9	110-8108	1	Rod-Link
10	32128-12	1	Nut-Flange

Trowel Plate Assembly

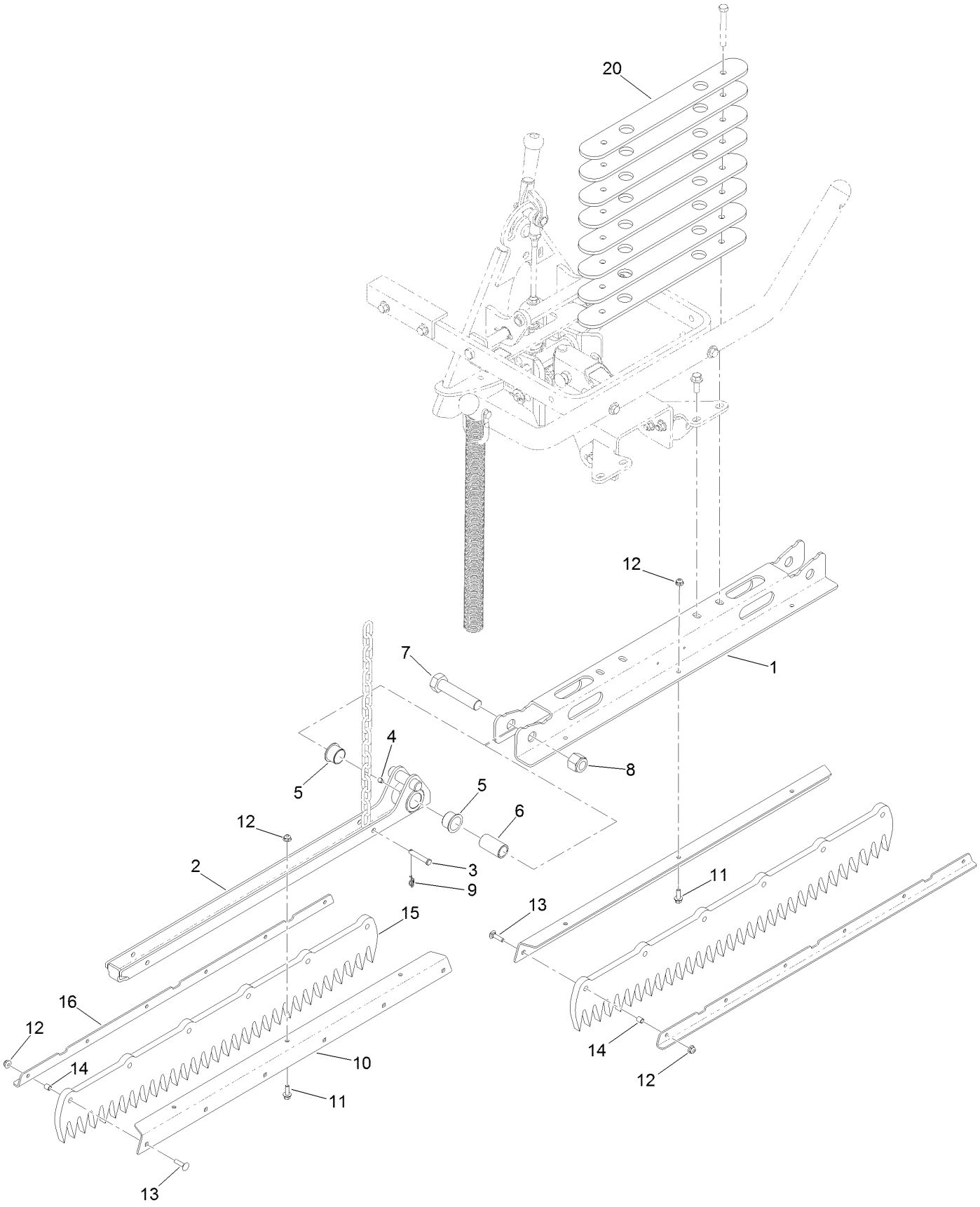

Trowel Plate Assembly (continued)

Ref.	Part Number	Qty.	Description
1	121-8052-03	1	Beam-Hitch
2	121-8056-03	2	Mount-Groomer
3	283-57	2	Pin-Clevis
4	302-59	2	Plug-EXT Hex Spl
5	127-0369	4	Bushing
6	127-0360	2	Spacer
7	328-5	2	Screw-HH
8	3296-51	2	Nut-Lock, NI
9	116-6639	2	Pin-Cotter, Locking
10	125-6488-03	3	Bracket-Groomer, Upper
11	3234-4	9	Screw-HHF
12	104-7201	27	Nut-HF, NI
13	3229-2	18	Screw-CARR
14	612503	18	Spacer
15	130-1874	3	Trowel-.50 THK
16	125-6489-03	3	Bracket-Groomer, Lower
20	130-7857-03	8	Weight

Attachments and Accessories

For 08767 QAS Flex Tooth Rake Sand Pro/Infield Pro 3040 and 5040 Traction Unit

Product Name	Model/Part
Broom Finishing Kit	08719
Rubber Trowel Kit	130-2629
Flex Rake Scarification Kit	132-6221

Notes:



Count on it.