Form No. 3417-671 Rev C

TORO®

Count on it.

Parts Catalog

48in TITAN® HD 2500 Series

Riding Mower

Model No. 74470—Serial No. 402100000 and Up

Register at www.Toro.com.
Original Instructions (EN)

3417-671 C

Ordering Replacement Parts

To order replacement parts, please supply the part number, the quantity, and the description of each part desired.

Understanding Reference Numbers

Each identified part in an illustration has a reference number. The reference number for a part also appears in the parts list, along with other information about the part.

This catalog uses two special reference number formats, one to indicate parts in a service assembly and another to indicate the quantity of a given part in an illustration.

Service Assembly Reference Numbers

Parts in service assemblies have reference numbers in the form a:b. The a represents the reference number of the entire service assembly and the b represents a sequential number unique to each part within the service assembly.

For example, a wheel assembly might be identified by reference number 6, the tire by 6:1, the valve by 6:2, and the wheel by 6:3. When you order the assembly identified by reference number 6, you receive all parts identified by reference numbers 6:1,6:2, and 6:3. However, you may also order any part individually. Reference numbers of this type appear in illustration and in parts lists.

Reference Numbers Indicating Quantity

In an illustration, if a reference number indicates more than one part, the reference number has the form nX y. The n represents the quantity of the part, the X is the multiplication symbol, and the y represents the reference number.

For example, in an illustration, the reference number 2X 37 means that two of the parts identified by reference number 37 are indicated.

Contents

Frame and Roll-Over Protection System Assembly 4
Roll-Over Protection System Assembly No. 126-9526 6
Hydraulic Assembly 8
LH Transaxle Assembly No. 126-2883 10
RH Transaxle Assembly No. 126-2884 12
Control Console and Guard Assembly 14
Fuel System and Vent Hose Assembly 16
Fuel Tank Assembly No. 126-4724 18
Seat Mount Assembly 20
Seat Pan and Latch Assembly No. 126-7309 22
Seat Assembly No. 136-9014 24
Motion Control Assembly 26
LH Motion Control Assembly 28
RH Motion Control Assembly 30
Caster Wheel and Fork Assembly 32
Fork and Caster Wheel Assembly 34
Rear Wheel Assembly 36
Electrical Assembly 38
Wire Harness Assembly No. 126-5803 40
Deck Lift Assembly 42
Deck Strut Assembly No. 126-8365 44
Engine Assembly 46
Deck Assembly 48
Deck Decal Assembly No. 127-6798 50
Idler Arm Assembly No. 126-0976 52
Rubber Deflector Assembly No. 108-2792 54
Attachments and Accessories 56

© 2023—The Toro® Company
8111 Lyndale Avenue South
Bloomington, MN 55420

Contact us at www.Toro.com.
Printed in the USA.
All Rights Reserved

Frame and Roll-Over Protection System Assembly

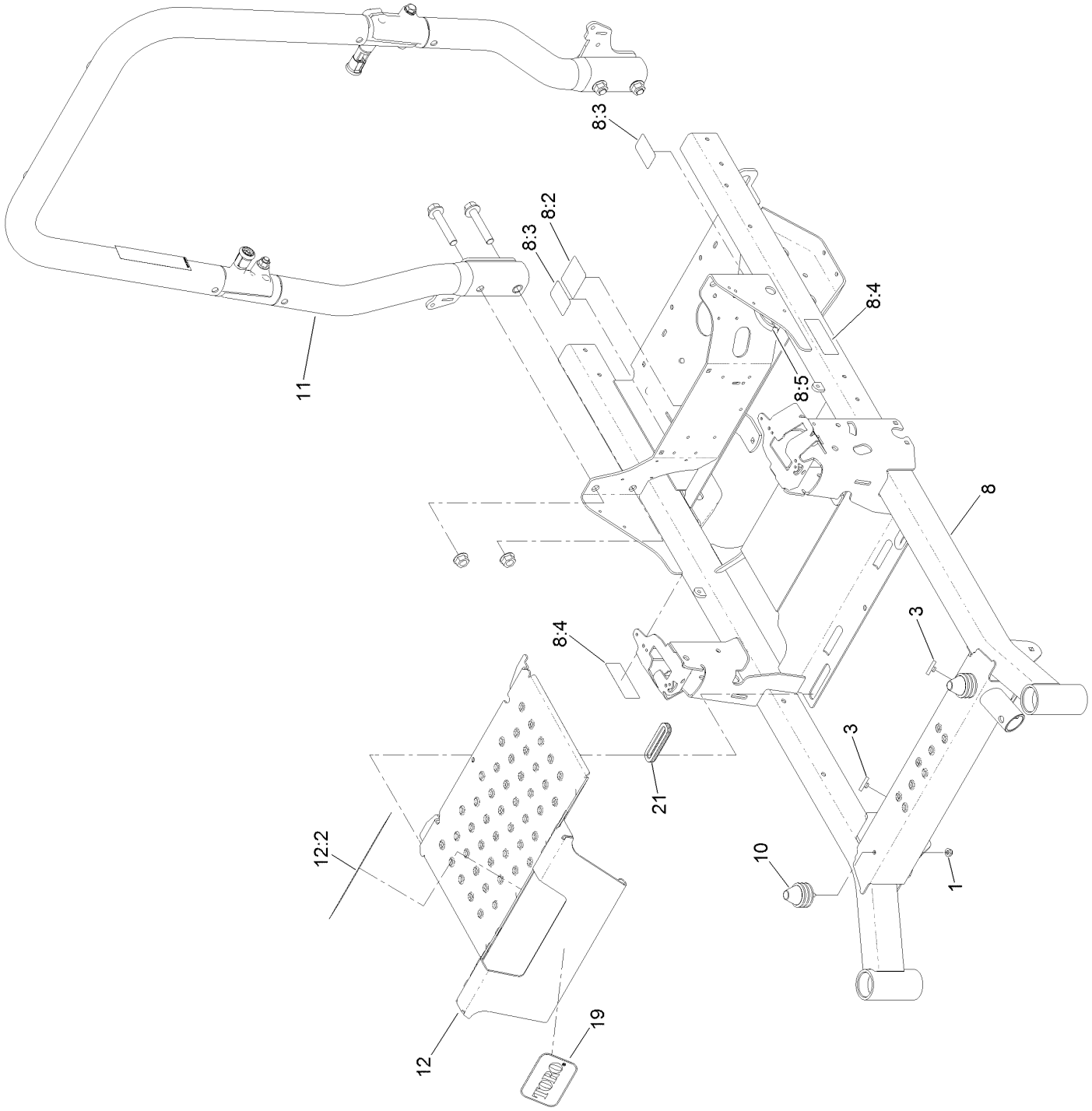

Frame and Roll-Over Protection System Assembly (continued)

Ref.	Part Number	Qty.	Description
1	104-8300	2	Nut-HF, NI
3	109-9233	2	Bumper-Push-In, Rubber
8	126-4699	1	Frame ASM
8:2	109-6014	1	Decal-Routing, Belt
8:3	116-8588	2	Decal-Release, Drive
8:4	126-4363	2	Decal-Warning
8:5	127-6618	1	Strip-Seal

Ref.	Part Number	Qty.	Description
10	126-5491	2	Isolator
11	126-9526	1	ROPS ASM
12	126-5872	1	Pan-Floor
12:2	126-8383	1	Decal-Danger
19	67-1300	1	Decal
21	126-7065	2	Grommet-Rubber

Roll-Over Protection System Assembly
No. 126-9526

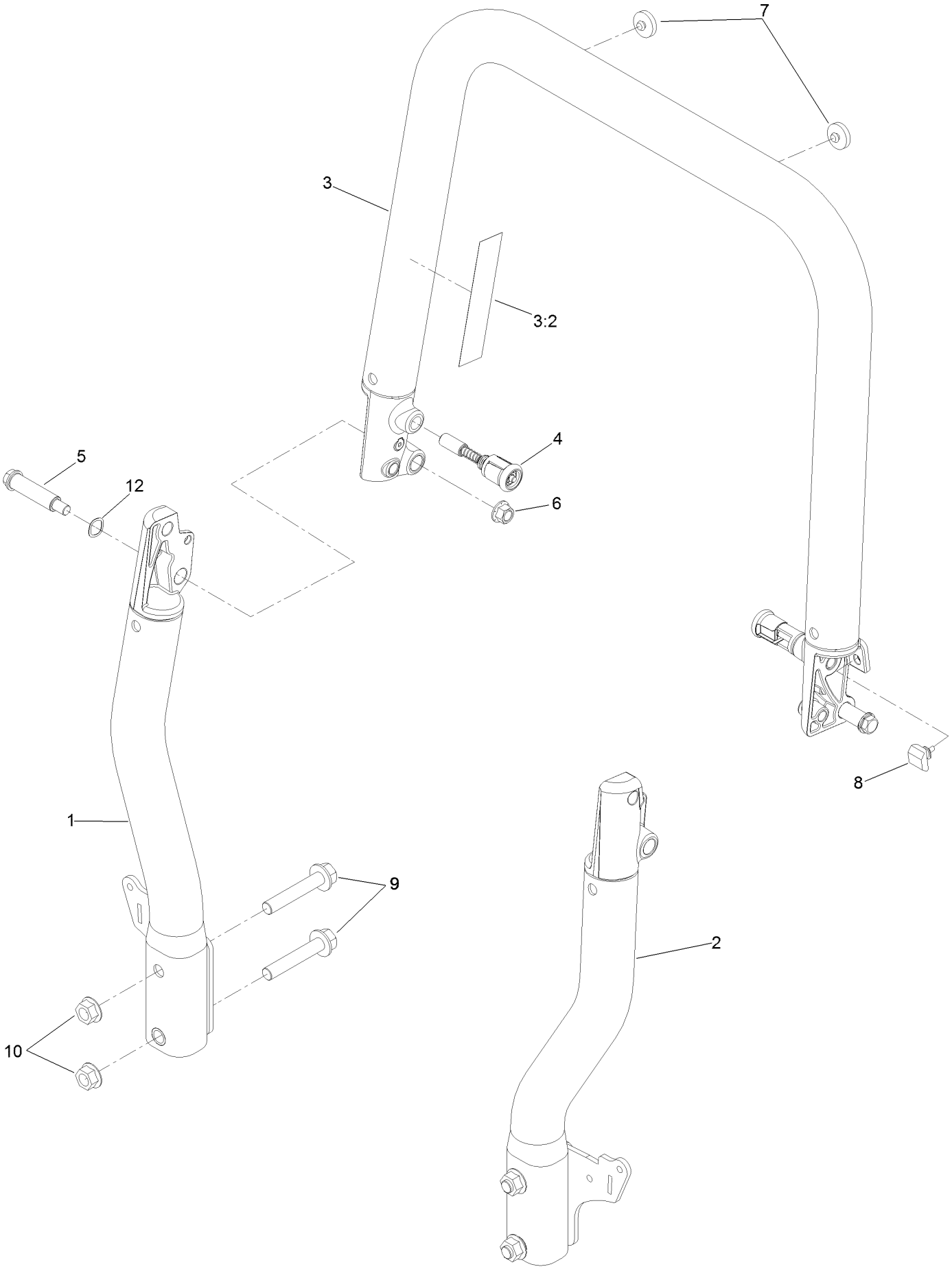

Roll-Over Protection System Assembly No. 126-9526 (continued)

Ref.	Part Number	Qty.	Description
1		1	Tube-Upright, RH ●
2		1	Tube-Upright, LH ●
3		1	Top Tube ASM ●
3:2	107-3069	1	Decal-Warning
4	116-0104	2	Pin-Spring
5	126-9209	2	Bolt-Shoulder
6	99-5107	2	Nut-Lock
7	135-0504	2	Bumper-ROPS
8	126-9966	2	Bumper-ROPS
9	126-9488	4	Screw-HHF
10	32128-50	4	Nut-Flange
12	119-4164	2	Washer-Wave

● Not serviced separately

Hydraulic Assembly

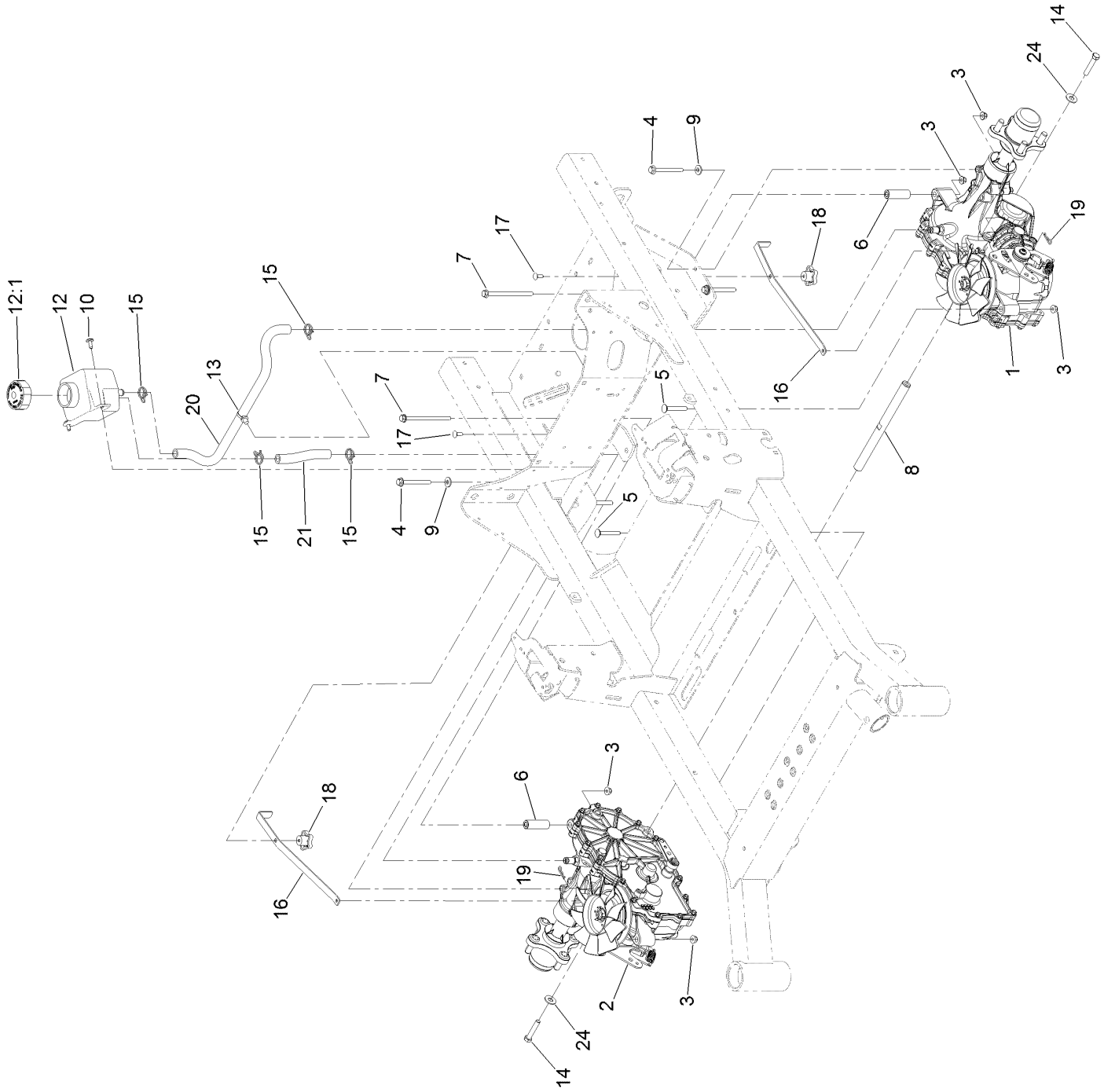

Hydraulic Assembly (continued)

Ref.	Part Number	Qty.	Description
1	126-2883	1	LH Transaxle ASM
2	126-2884	1	RH Transaxle ASM
3	104-8300	8	Nut-HF, NI
4	126-4687	4	Screw-HHF
5	3230-7	2	Bolt-CARR
6	116-5809	2	Spacer-Hydro
7	126-5896	2	Screw HHF
8	116-6833	1	Shaft-Spacer
9	1-303334	4	Washer-Spring
10	126-6266	2	Screw-Tph
12	109-2250	1	Tank-HYD

Ref.	Part Number	Qty.	Description
12:1	109-3320	1	Cap-Reservoir, HYD
13	32180-118	1	Clip-Tie
14	94-7972	2	Screw-HH W/Loctite ●
15	126-0327	4	Clamp-Hose
16	109-5395	2	Arm-Bypass, Hydro
17	3229-1	2	Screw-CARR
18	108-6402	2	Knob-Handle
19	1-806003	2	Pin-Cotter
20	126-5668	1	Hose-Hydraulic
21	126-5669	1	Hose-Hydraulic
24	3256-4	2	Washer-Flat

● Use Pro-Lock, Nut Type (P/N 1-840022, .5ml tube) on threads.

LH Transaxle Assembly No. 126-2883

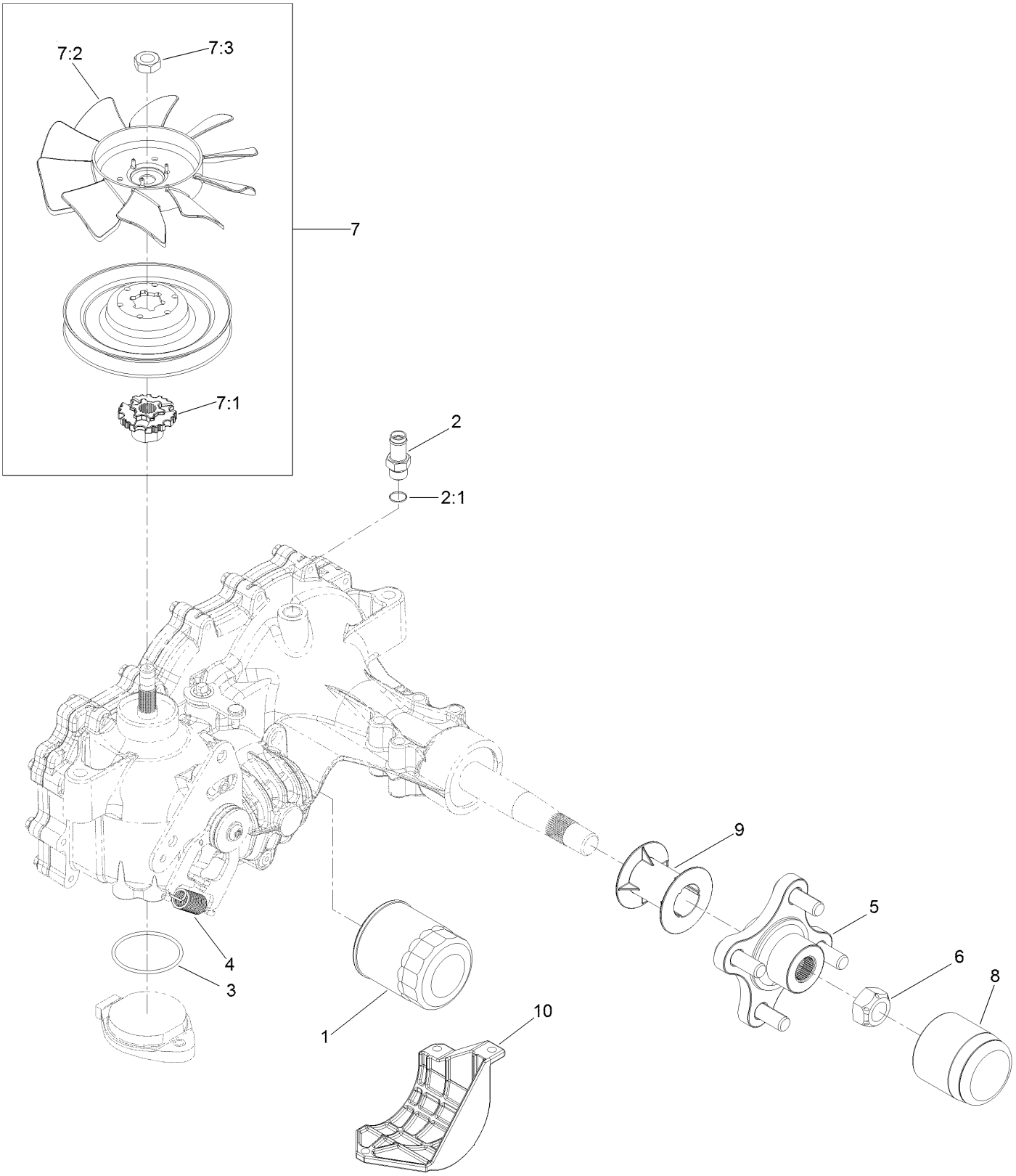

LH Transaxle Assembly No. 126-2883 (continued)

Ref.	Part Number	Qty.	Description
1	109-3321	1	Element-Oil Filter, HYD
2	109-3278	1	Adapter-Straight
2:1	237-42	1	O-Ring
3	109-3540	1	O Ring-Seal
4	109-5592	1	Spring-Extension
5	116-3872	1	Hub-Offset
6	109-3536	1	Nut-Hub
7	126-8904	1	Fan And Pulley Kit

Ref.	Part Number	Qty.	Description
7:1	126-8905	1	Hub-Fan
7:2	126-0226	1	Fan
7:3	116-9714	1	Nut-HJ
8	116-6214	1	Cap-Axle, Long
9	116-6213	1	Tube-Axle
10	120-7979	1	Guard-Filter, LH
99	135-3604	1	Brake Shaft Seal Kit ●
99	121-3243	1	Seal Kit ●

● Not illustrated

RH Transaxle Assembly No. 126-2884

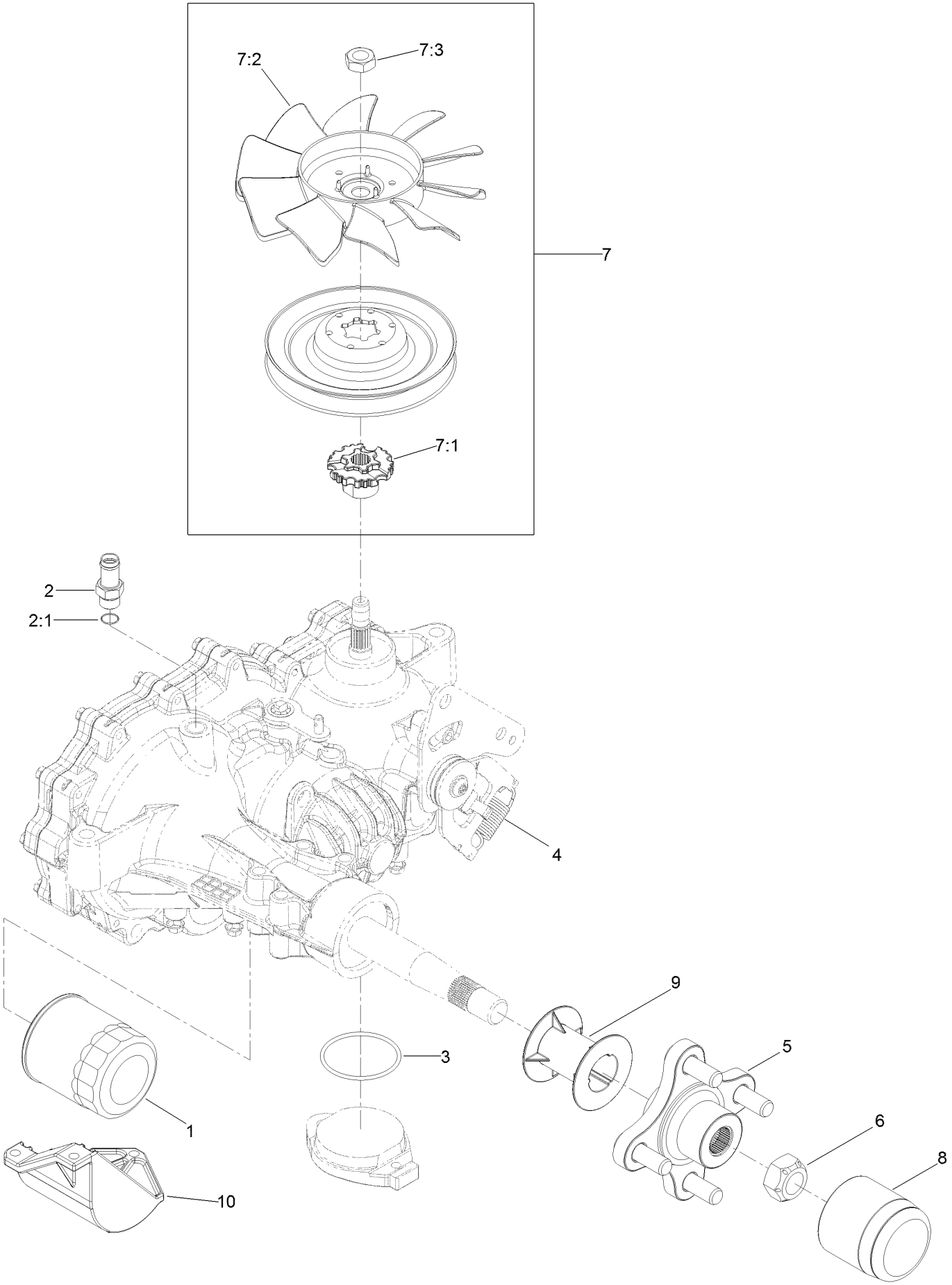

RH Transaxle Assembly No. 126-2884 (continued)

Ref.	Part Number	Qty.	Description
1	109-3321	1	Element-Oil Filter, HYD
2	109-3278	1	Adapter-Straight
2:1	237-42	1	O-Ring
3	109-3540	1	O Ring-Seal
4	109-5592	1	Spring-Extension
5	116-3872	1	Hub-Offset
6	109-3536	1	Nut-Hub
7	126-8904	1	Fan And Pulley Kit

Ref.	Part Number	Qty.	Description
7:1	126-8905	1	Hub-Fan
7:2	126-0226	1	Fan
7:3	116-9714	1	Nut-HJ
8	116-6214	1	Cap-Axle, Long
9	116-6213	1	Tube-Axle
10	120-7981	1	Guard-Filter, RH
11	121-3243	1	Seal Kit ●
99	135-3604	1	Brake Shaft Seal Kit ●

● Not illustrated

Control Console and Guard Assembly

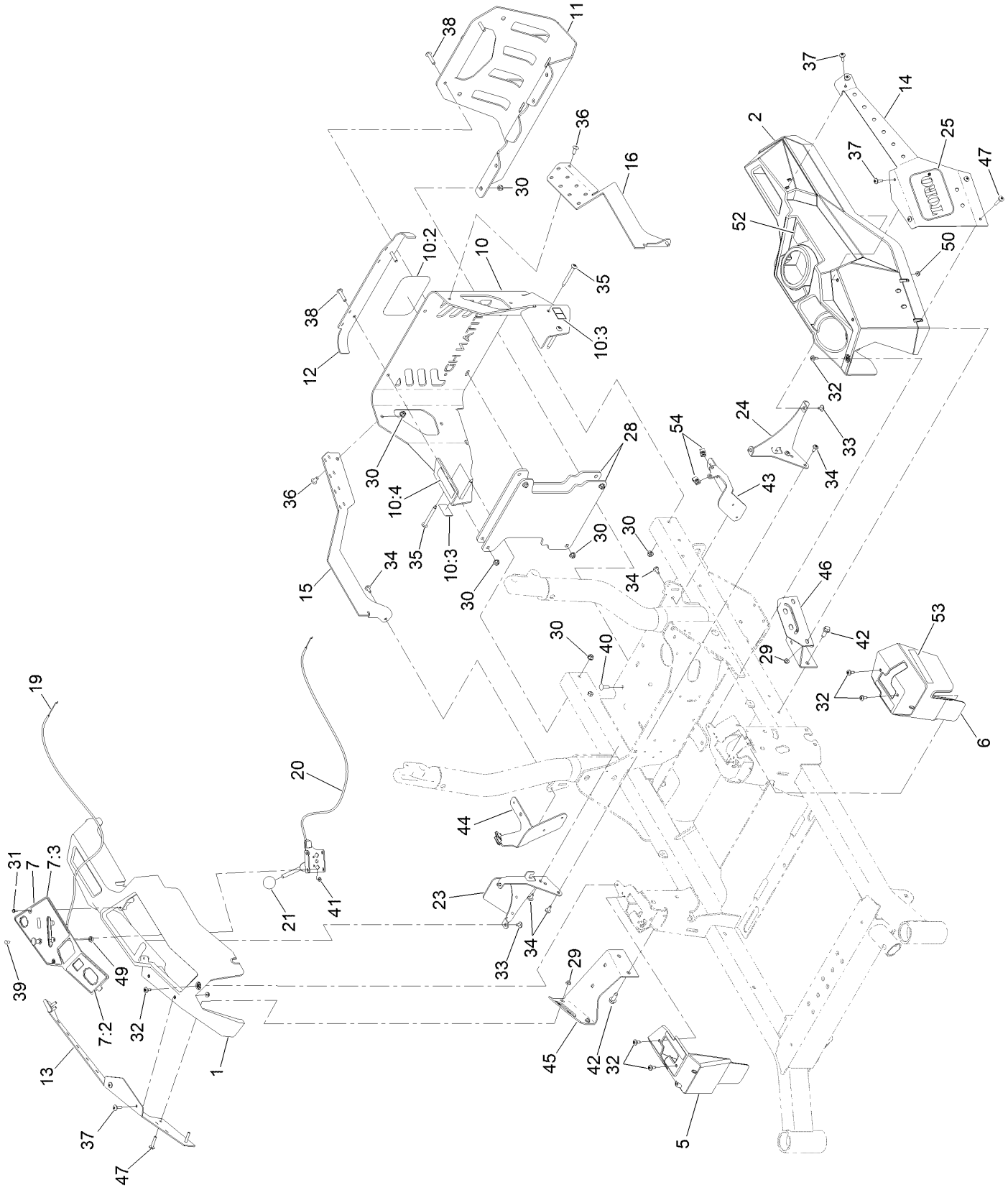

Control Console and Guard Assembly (continued)

Ref.	Part Number	Qty.	Description
1	126-4983	1	Console-RH
2	126-4984	1	Console-LH
5	126-7371	1	Cover-Control, Motion (RH)
6	126-7372	1	Cover-Control, Motion (LH)
7	136-1673	1	Control Panel ASM
7:2	126-9115	1	Decal-Panel, Control
7:3	136-1305	1	Decal-Panel, Control
10	126-7803	1	Rear Guard ASM
10:2	99-4693	1	Decal
10:3	106-5517	2	Decal-Warning
10:4	117-2718	1	Decal-Arrester, Spark
11	126-7664-03	1	Guard-Muffler
12	126-6260-01	1	Trim-Upper, Rear
13	136-1745-01	1	Cover-Pod, RH
14	136-1746-01	1	Cover-LH
15	126-9023-01	1	Bracket-Guard, RH
16	126-9022-01	1	Bracket-Guard, LH
19	126-7009	1	Cable-Control, Choke
20	126-7008	1	Cable-Control, Throttle
21	1-603175	1	Knob-Ball
23	126-9945	1	Support-Console, RH
24	126-5532-03	1	Bracket-Console, LH
25	68-3640	2	Decal
28	126-9165-01	2	Weight-Rear

Ref.	Part Number	Qty.	Description
29	104-7201	4	Nut-HF, NI
30	104-8300	12	Nut-HF, NI
31	117-5036	2	Screw-Plastic, HWH
32	120-7950	6	Screw-Torx
33	126-5544	4	Screw-Torx
34	126-6266	8	Screw-Tph
35	126-6267	4	Screw-TTH
36	126-6268	2	Screw-TTH
37	126-6269	8	Screw-Truss
38	126-7439	4	Screw-Torx
39	1-807513	2	Bolt-CARR
40	3230-22	2	Screw-CARR
41	3296-2	2	Nut-Lock, NI
42	126-1696	4	Screw-HWHTF
43	126-9808-03	1	Bracket-Support, Left Pod
44	126-9809-03	1	Bracket-Support, Right Pod
45	136-9030-01	1	Bracket-Support, Pod (RH)
46	136-9029-01	1	Bracket-Support, Pod (LH)
47	126-8232	4	Screw-Truss Hex Skt
49	3220-3	1	Nut-HJ
50	32149-2	4	Nut-Keps
52	126-9939	1	Decal-Fill, Fuel
53	126-9300	2	Decal
54	126-3739	4	Nut-Retainer

Fuel System and Vent Hose Assembly

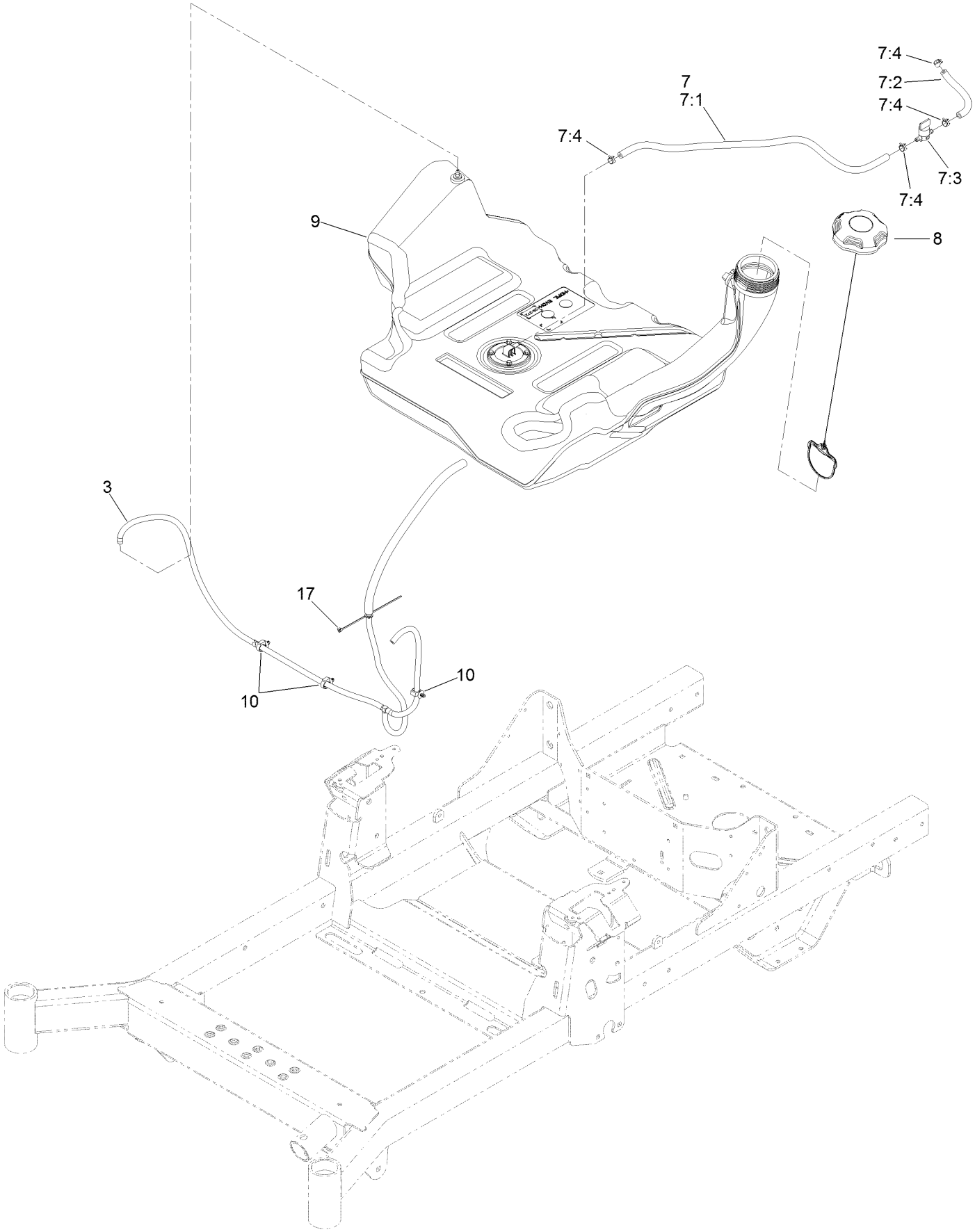

Fuel System and Vent Hose Assembly (continued)

Ref.	Part Number	Qty.	Description
3	126-8736	1	Vent Hose ASM
7	126-8740	1	Fuel Hose ASM
7:1	109-0302	1	Hose-Fuel
7:2	109-0678	1	Hose-Fuel
7:3	1-603770	1	Valve-Fuel
7:4	2412-98	4	Clamp-Hose
8	126-4723	1	Cap-Fuel
9	126-4724	1	Tank-Fuel
10	126-5523	3	Clip
17	1-303287	1	Tie-Cable

Fuel Tank Assembly No. 126-4724

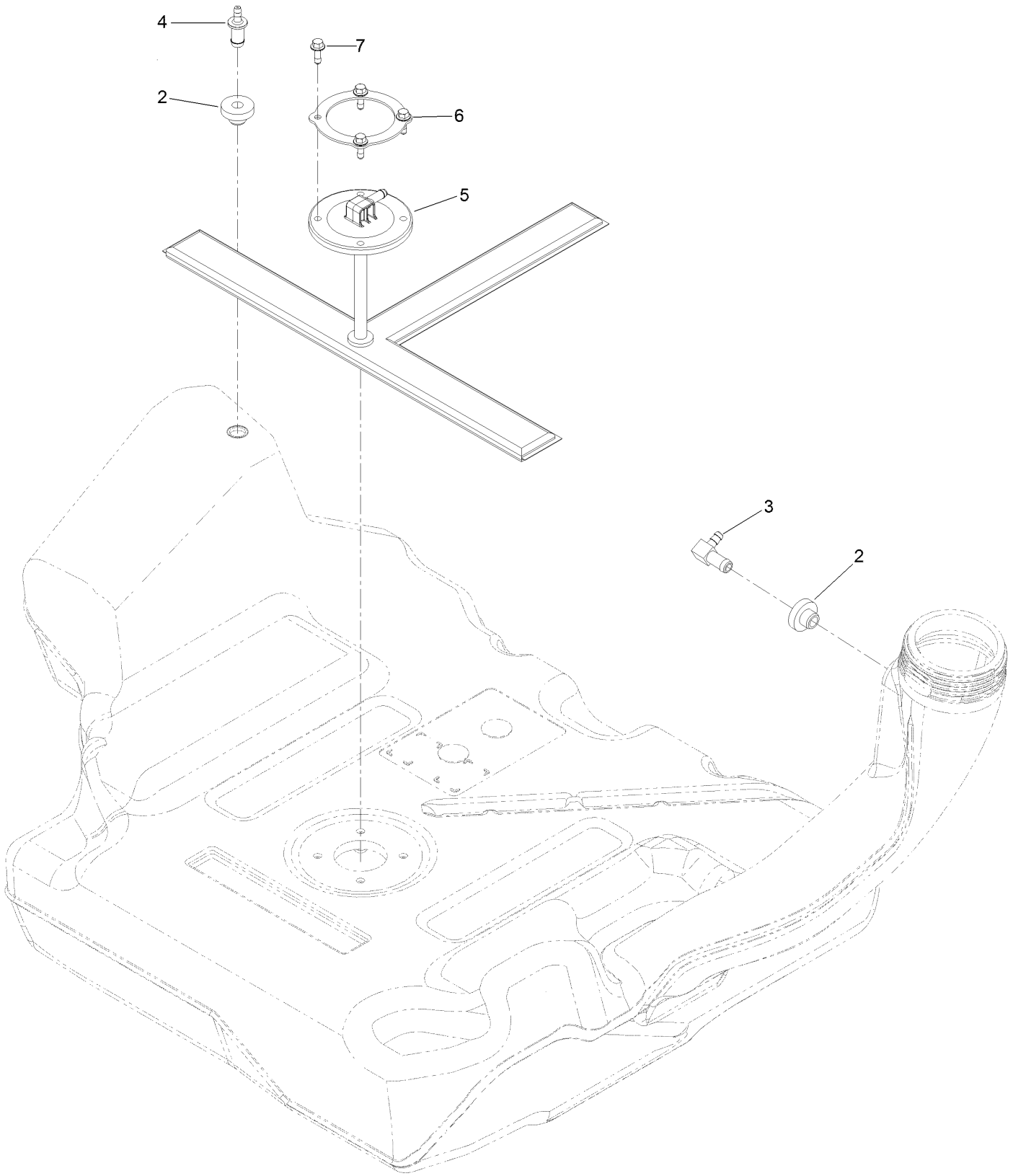

Fuel Tank Assembly No. 126-4724 (continued)

Ref.	Part Number	Qty.	Description
2	46-6560	2	Bushing
3	126-9057	1	Fitting-90 DEG
4	116-4630	1	Fitting-Orifice, Straight
5	126-5528	1	Pickup-Fuel
6	126-5527	1	Ring-Retainer
7	126-5525	4	Bolt

Seat Mount Assembly

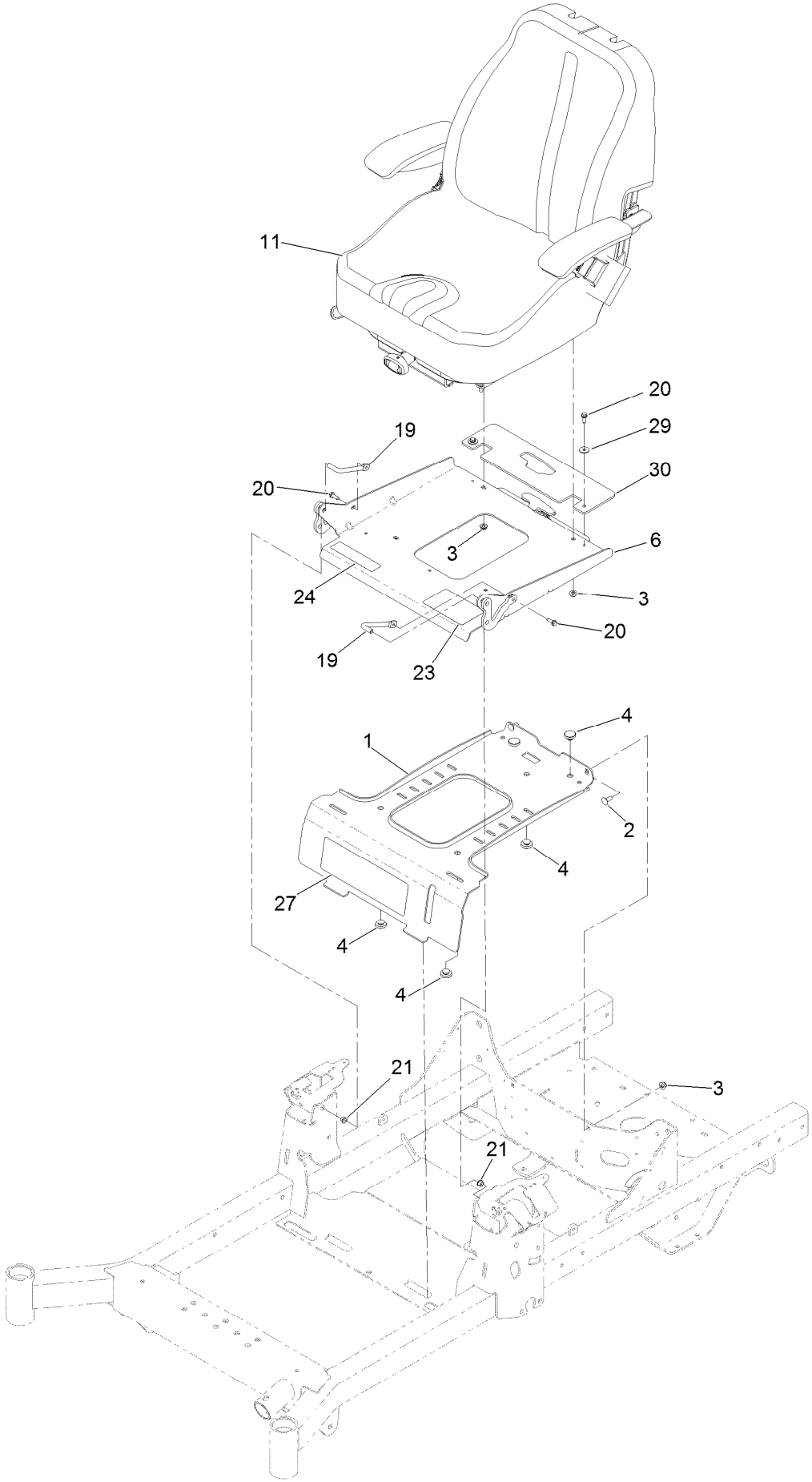

Seat Mount Assembly (continued)

Ref.	Part Number	Qty.	Description
1	126-4082-03	1	Plate-Retainer, Tank
2	3230-23	2	Bolt-CARR
3	104-8300	6	Nut-HF, NI
4	135-0505	5	Bumper-Seat
6	126-7309	1	Seat Pan And Latch ASM
11	136-9014	1	Seat ASM
19	126-5914	2	Pin-Pivot, Seat
20	32144-44	4	Screw-HWH, Thread Roll
21	1-603735	2	Bushing-Flanged
23	126-8151	1	Decal-Aid, Service
24	126-8161	1	Decal-Latch, Seat
27	126-9273	1	Decal
29	3256-67	2	Washer
30	135-0214	1	Guard-Seat, Rubber

Seat Pan and Latch Assembly No. 126-7309

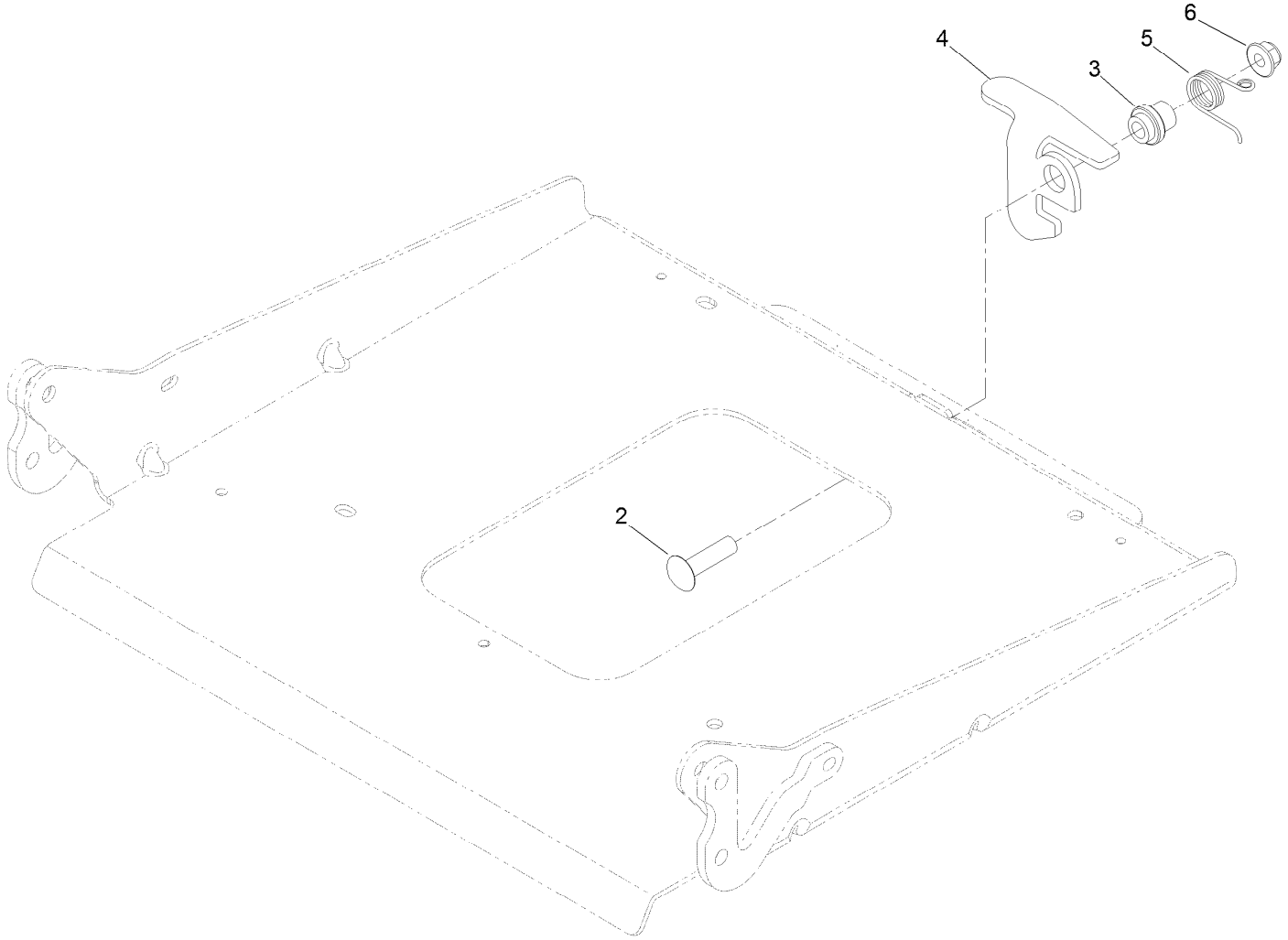

Seat Pan and Latch Assembly No. 126-7309 (continued)

Ref.	Part Number	Qty.	Description
2	3231-26	1	Screw-CARR
3	107-0075	1	Bushing-Latch, Seat
4	126-6739	1	Latch-Catch, Single
5	126-8923	1	Spring-Torsion, Latch
6	104-8301	1	Nut-HF, NI

Seat Assembly No. 136-9014

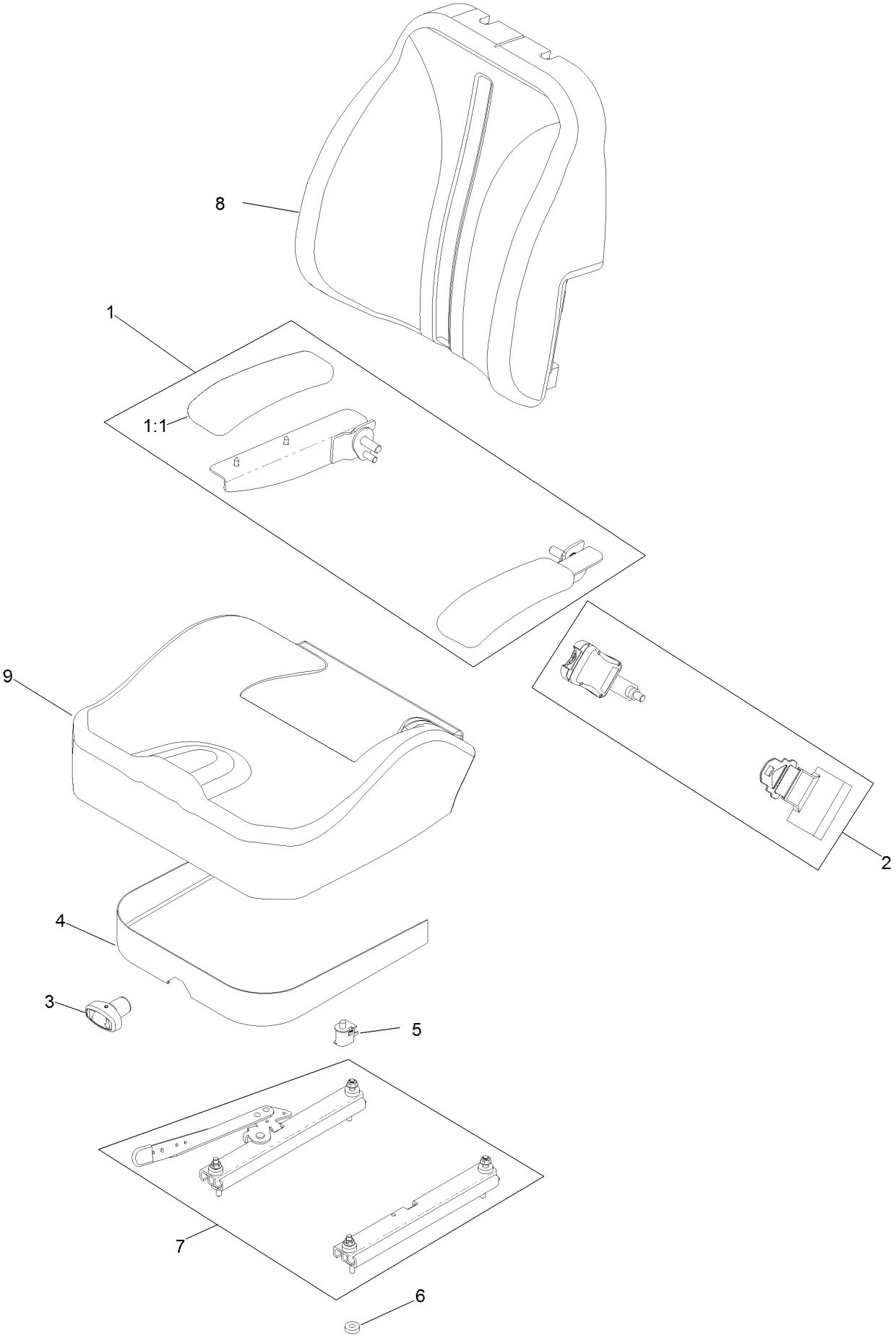

Seat Assembly No. 136-9014 (continued)

Ref.	Part Number	Qty.	Description
1	126-2058	1	Armrest Kit
1:1	110-4163	2	Cushion-Rest, Arm
2	130-0845	1	Seat Belt Kit
3	130-0846	1	Knob-Adjuster
4	126-3506	1	Cover-Skirt W/Fasteners
5	82-2190	1	Switch-Bail
6	26-4840	4	Spacer-Pin, Mounting
7	130-0844	1	Track Set
8	136-9019	1	Cover-Back, Seat
9	136-9020	1	Cover-Bottom, Seat

Motion Control Assembly

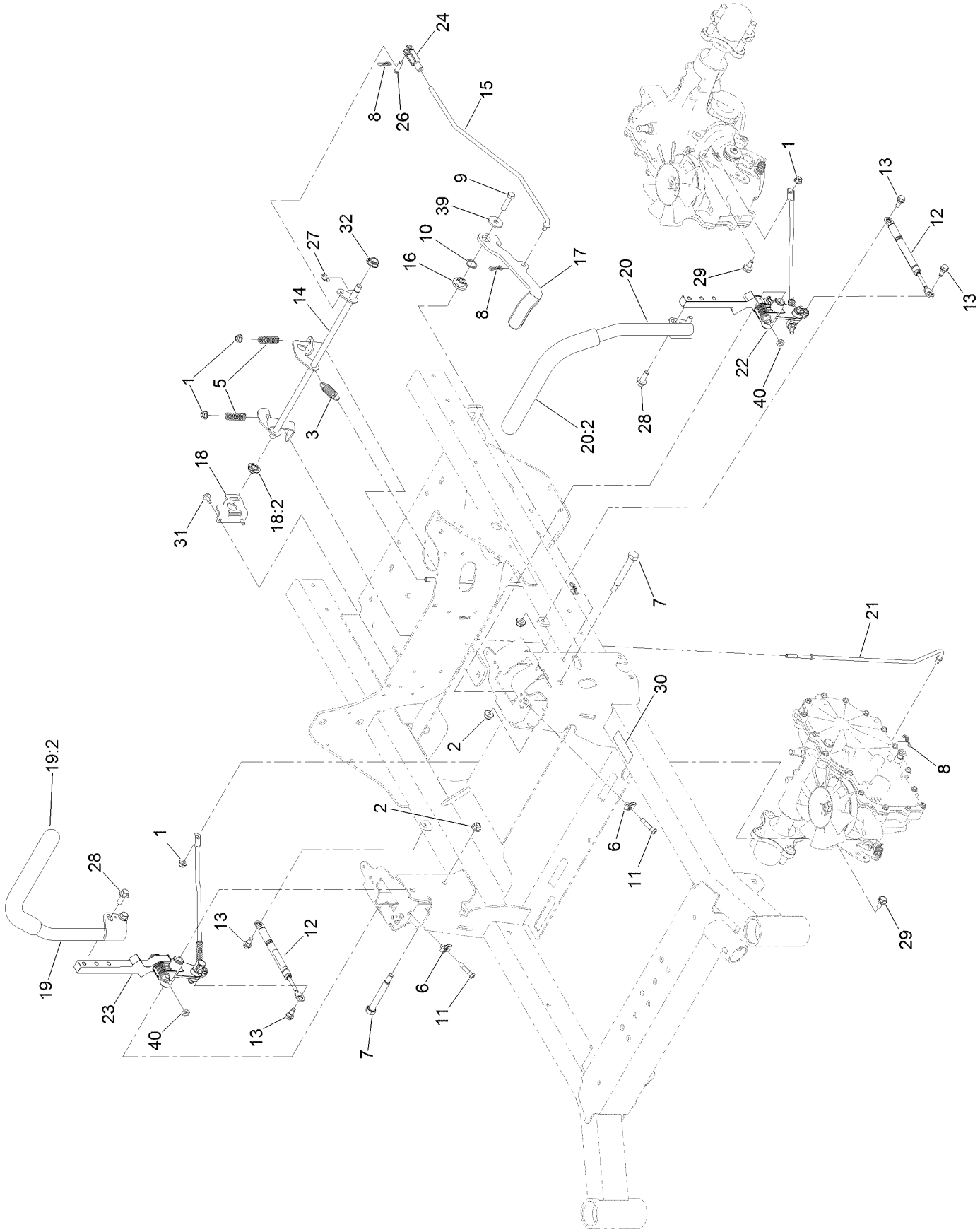

Motion Control Assembly (continued)

Ref.	Part Number	Qty.	Description
1	104-8300	4	Nut-HF, NI
2	104-8301	3	Nut-HF, NI
3	107-1045	1	Spring-Extension
5	109-7694	2	Spring-Compression
6	112-3306	2	Nut
7	115-5099	2	Bolt-Pivot
8	119-1415	4	Pin-Cotter, Locking
9	323-8	1	Screw-HH
10	119-4164	1	Washer-Wave
11	126-4299	2	Screw-HSBH
12	126-4322	2	Damper
13	126-4424	4	Screw-Shoulder
14	126-5813	1	Shaft-Brake
15	126-5819	1	Linkage-Brake, Upper
16	126-5989	1	Pivot-Flange
17	126-9490	1	Lever-Brake (With Grip)
18	126-6456	1	Bracket-Brake
18:2	126-5820	1	Bearing-Spherical

Ref.	Part Number	Qty.	Description
19	126-9191	1	RH Control Handle ASM
19:2	126-7359	1	Grip
20	126-9192	1	LH Control Handle ASM
20:2	126-7359	1	Grip
21	126-7217	2	Linkage-Brake, Lower
22		1	LH Motion Control ASM ●
23		1	RH Motion Control ASM ●
24	1-303105	1	Yoke-Adjustable
26	1-808280	1	Pin-Clevis
27	32120-47	1	Ring-Retaining, External
28	3234-42	4	Screw-HHF
29	37-8771	2	Bolt-Shoulder, HF
30	115-9625	1	Decal-Brake, Parking
31	126-6266	2	Screw-Tph
32	126-5820	1	Bearing-Spherical
39	2844	1	Washer
40	3218-3	2	Nut-Jam

● Not serviced separately

LH Motion Control Assembly

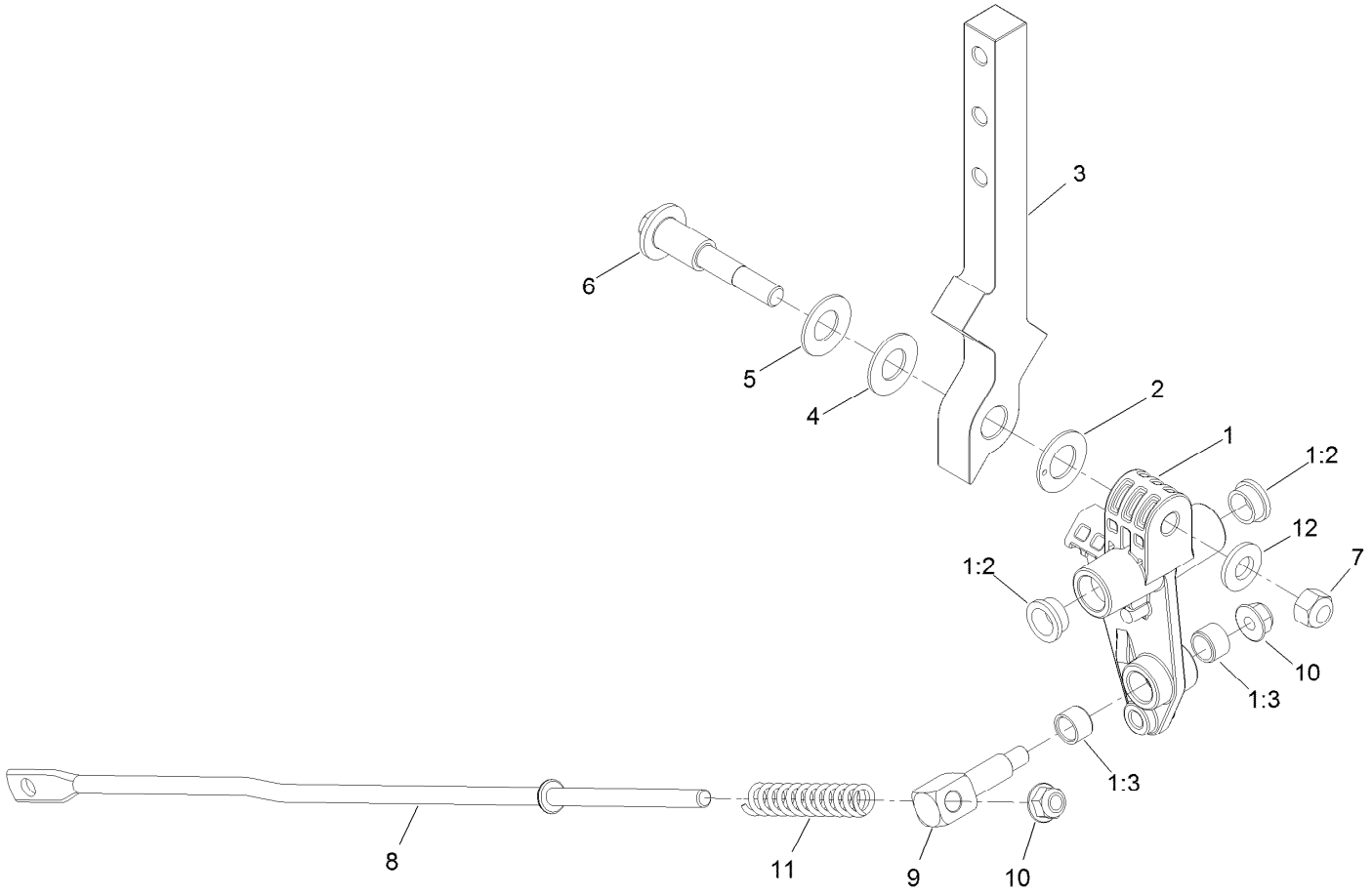

LH Motion Control Assembly (continued)

Ref.	Part Number	Qty.	Description
1	126-3773	1	Control Arm ASM
1:2	126-8909	2	Bushing
1:3	1-413152	2	Bushing-Sleeve
2	126-7296	1	Washer-Friction
3	126-8182	1	Arm-Control
4	117-1240	1	Washer
5	119-8925	1	Washer-Belleville
6	117-1198	1	Bolt-Pivot
7	32152-2	1	Nut-Lock, Cone
8	126-5435	1	Link-Control
9	126-5434	1	Swivel
10	104-8300	2	Nut-HF, NI
11	126-8195	1	Spring-Return, Neutral
12	3256-24	1	Washer-Plain

RH Motion Control Assembly

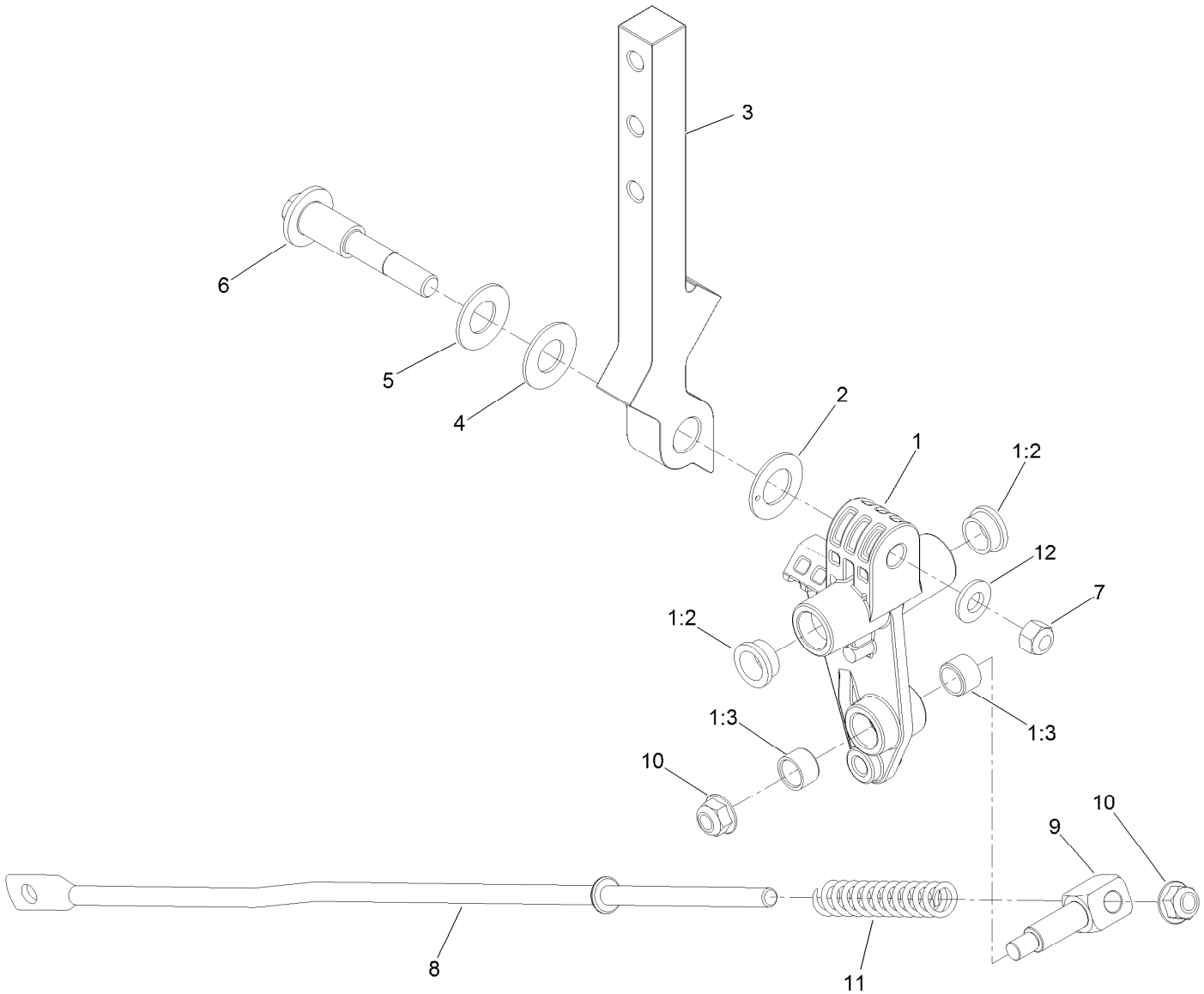

RH Motion Control Assembly (continued)

Ref.	Part Number	Qty.	Description
1	126-3773	1	Control Arm ASM
1:2	126-8909	2	Bushing
1:3	1-413152	2	Bushing-Sleeve
2	126-7296	1	Washer-Friction
3	126-8182	1	Arm-Control
4	117-1240	1	Washer
5	119-8925	1	Washer-Belleville
6	117-1198	1	Bolt-Pivot
7	32152-2	1	Nut-Lock, Cone
8	126-5435	1	Link-Control
9	126-5434	1	Swivel
10	104-8300	2	Nut-HF, NI
11	126-8195	1	Spring-Return, Neutral
12	3256-24	1	Washer-Plain

Caster Wheel and Fork Assembly

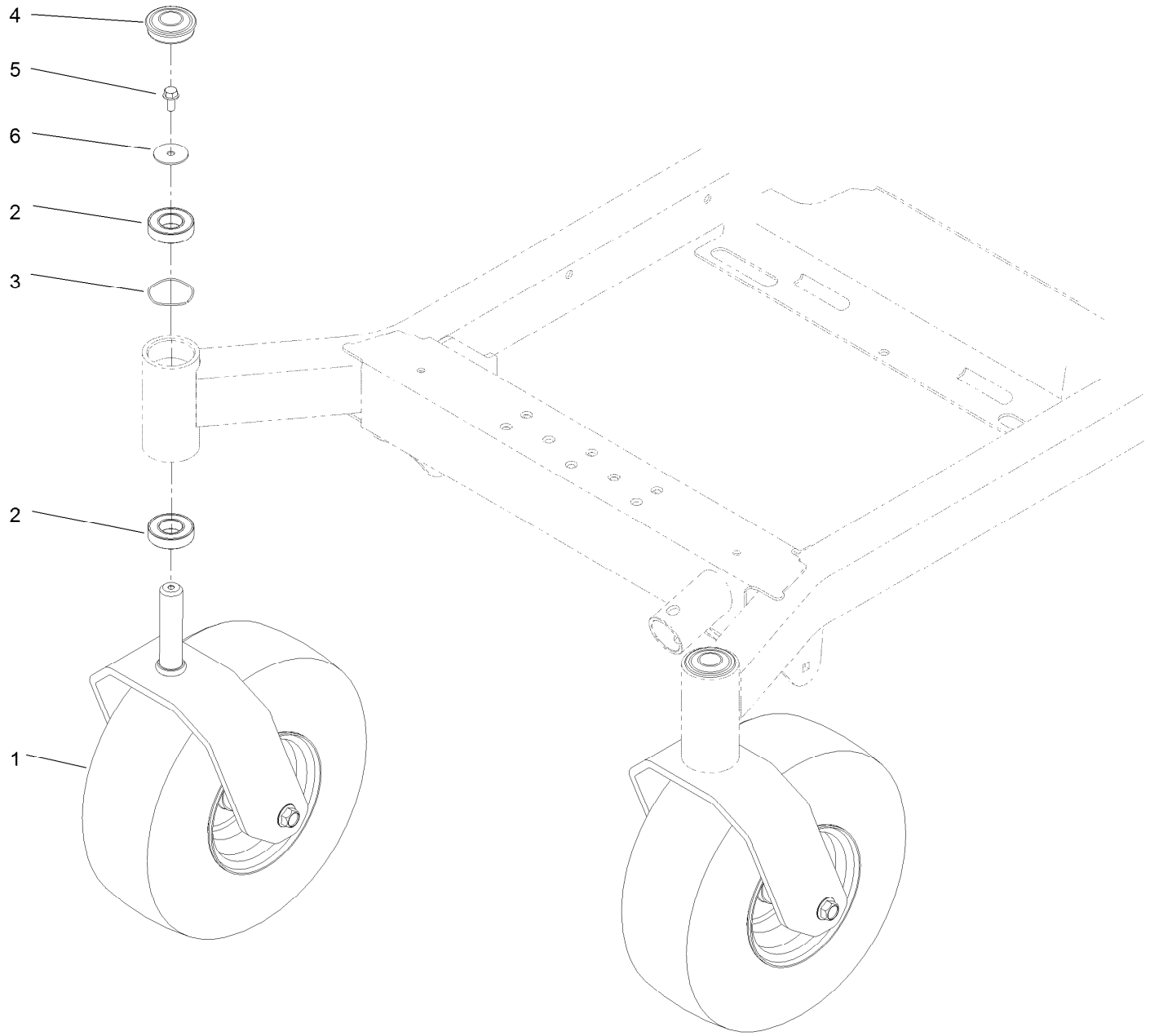

Caster Wheel and Fork Assembly (continued)

Ref.	Part Number	Qty.	Description
1		2	Front Caster ASM (W/Fork) ●
2	109-3678	4	Bearing-Ball
3	126-5897	2	Spring
4	116-4348	2	Cap-Grease
5	3234-5	2	Screw-HHF
6	3256-68	2	Washer-Flat

● Not serviced separately

Fork and Caster Wheel Assembly

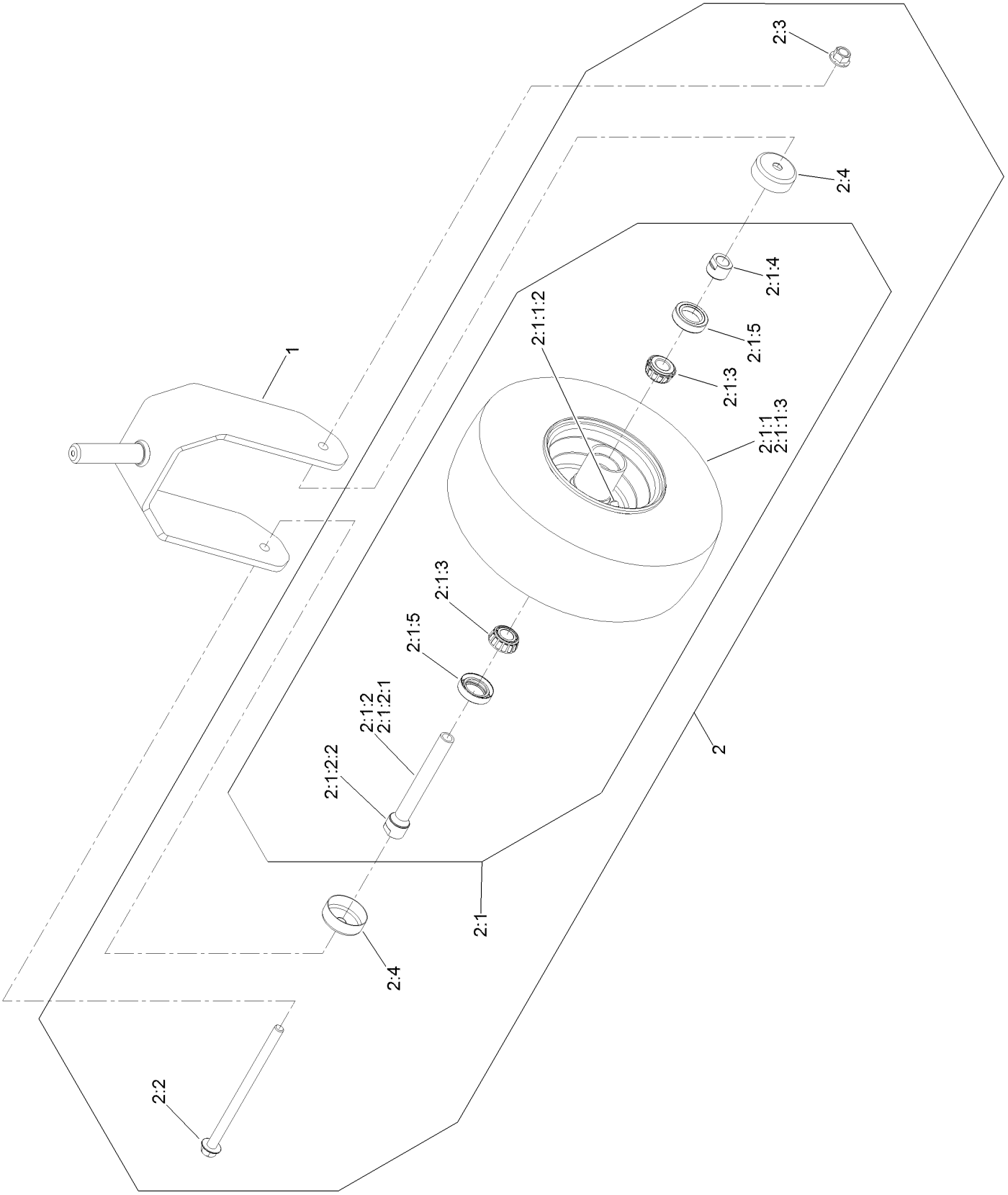

Fork and Caster Wheel Assembly (continued)

Ref.	Part Number	Qty.	Description
1	126-4312-01	1	Fork-Caster
2	126-7753	1	Wheel ASM
2:1		1	Wheel And Bearing ASM ●
2:1:1		1	Wheel And Tire ASM ●
2:1:1:2	5108	1	Valve
2:1:1:3	126-5959	1	Tire
2:1:2	126-7796	1	Caster Axle ASM
2:1:2:1	126-5220	1	Axle-Caster
2:1:2:2	103-3051	1	Spacer-Nut
2:1:3	1-633585	2	Bearing-Cone, Taper
2:1:4	103-3051	1	Spacer-Nut
2:1:5	103-0063	2	Seal-Caster
2:2	126-5389	1	Screw-HHF
2:3	99-5107	1	Nut-Lock
2:4	103-2768	2	Guard-Seal

● Not serviced separately

Rear Wheel Assembly

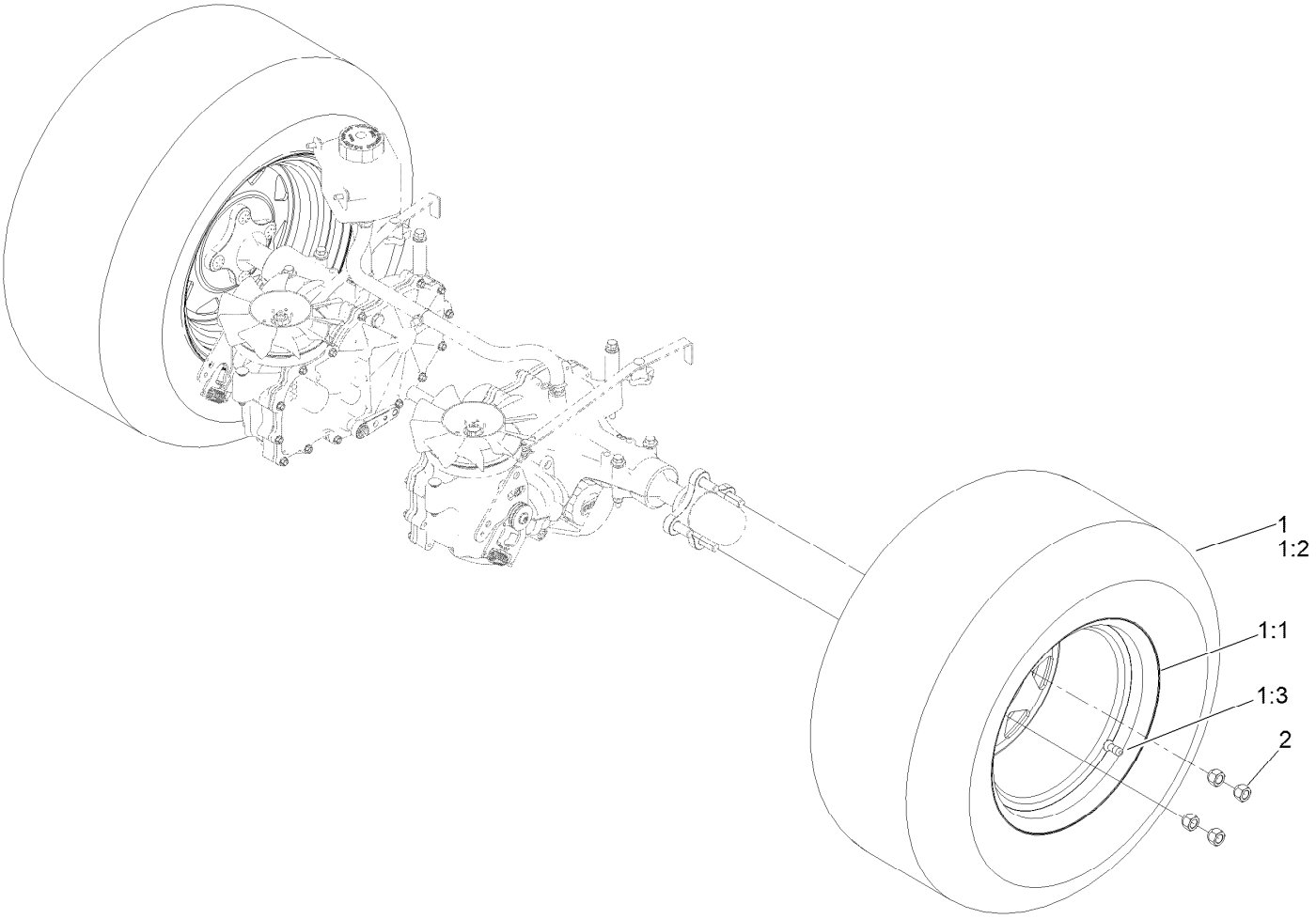

Rear Wheel Assembly (continued)

Ref.	Part Number	Qty.	Description
1	126-4871	2	Wheel And Tire ASM
1:1	126-9074	1	Wheel
1:2	126-4875	1	Tire
1:3	232-27	1	Stem-Valve
2	242-50	8	Nut-Lug

Electrical Assembly

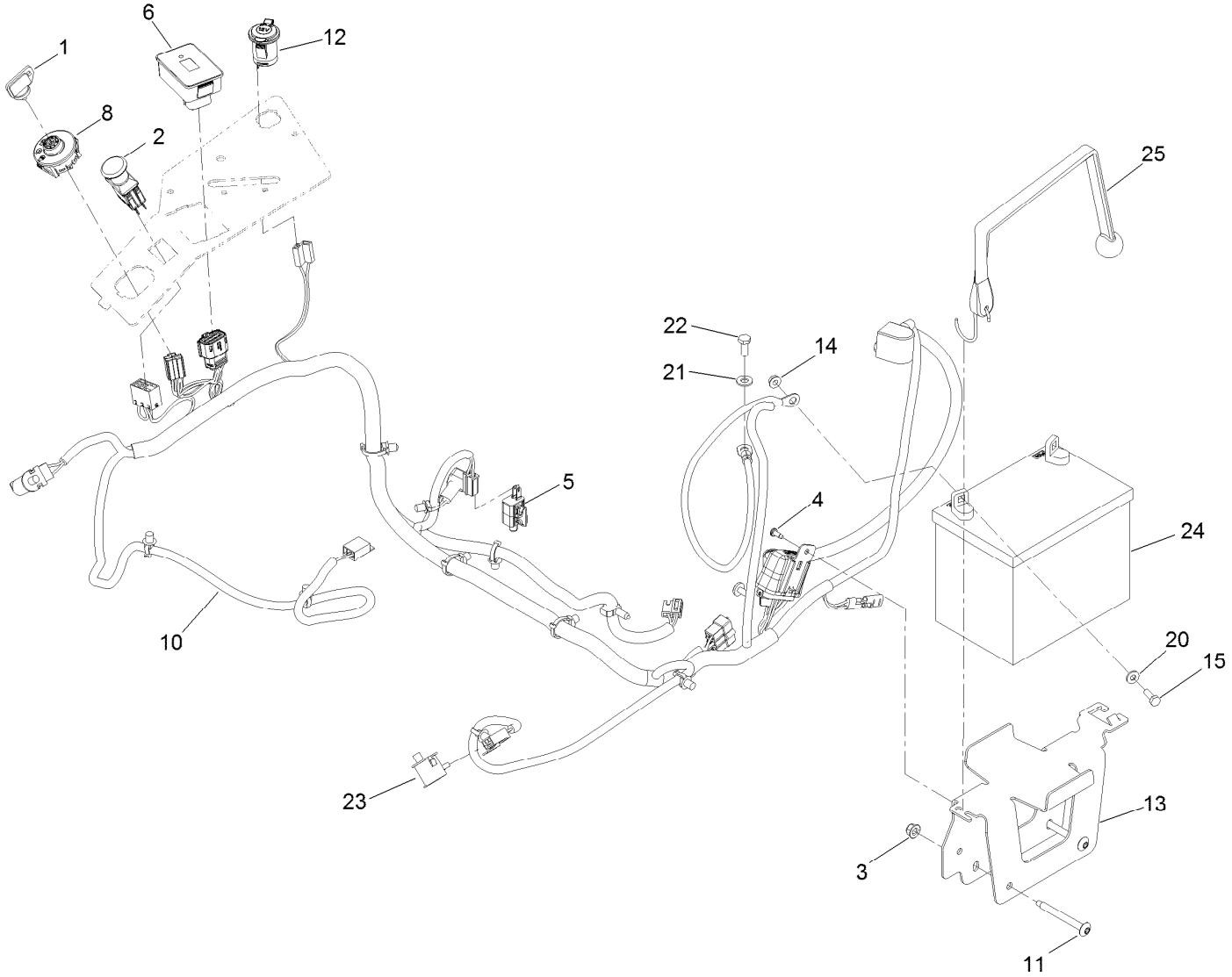

Electrical Assembly (continued)

Ref.	Part Number	Qty.	Description
1	63-8360	1	Key-Ignition
2	103-5221	1	Switch-PTO
3	104-8300	2	Nut-HF, NI
4	105-6849	1	Screw-Forming, Thread
5	110-6765	1	Switch
6	116-5609	1	Module ASM
8	137-4100	1	Switch-Ignition
10	126-5803	1	Harness-Wire ▲
11	126-6267	2	Screw-TTH
12	126-6499	1	Port-Power, 12V
13	126-6725-03	1	Tray-Battery
14	32128-33	2	Nut-HF
15	321-4	2	Screw-HH
20	3256-22	2	Washer-Flat
21	33094-00	1	Washer-Plain
22	33114-020	1	Screw-HH
23	82-2190	2	Switch-Bail
24		1	Battery (300 CCA, Wet) ●■
25	126-7627	1	Strap-Bungee

● Obtain locally.

■ Not serviced separately

▲ Use dielectric grease on all unsealed connectors and terminals only. Do not apply in sealed connectors.

Wire Harness Assembly No. 126-5803

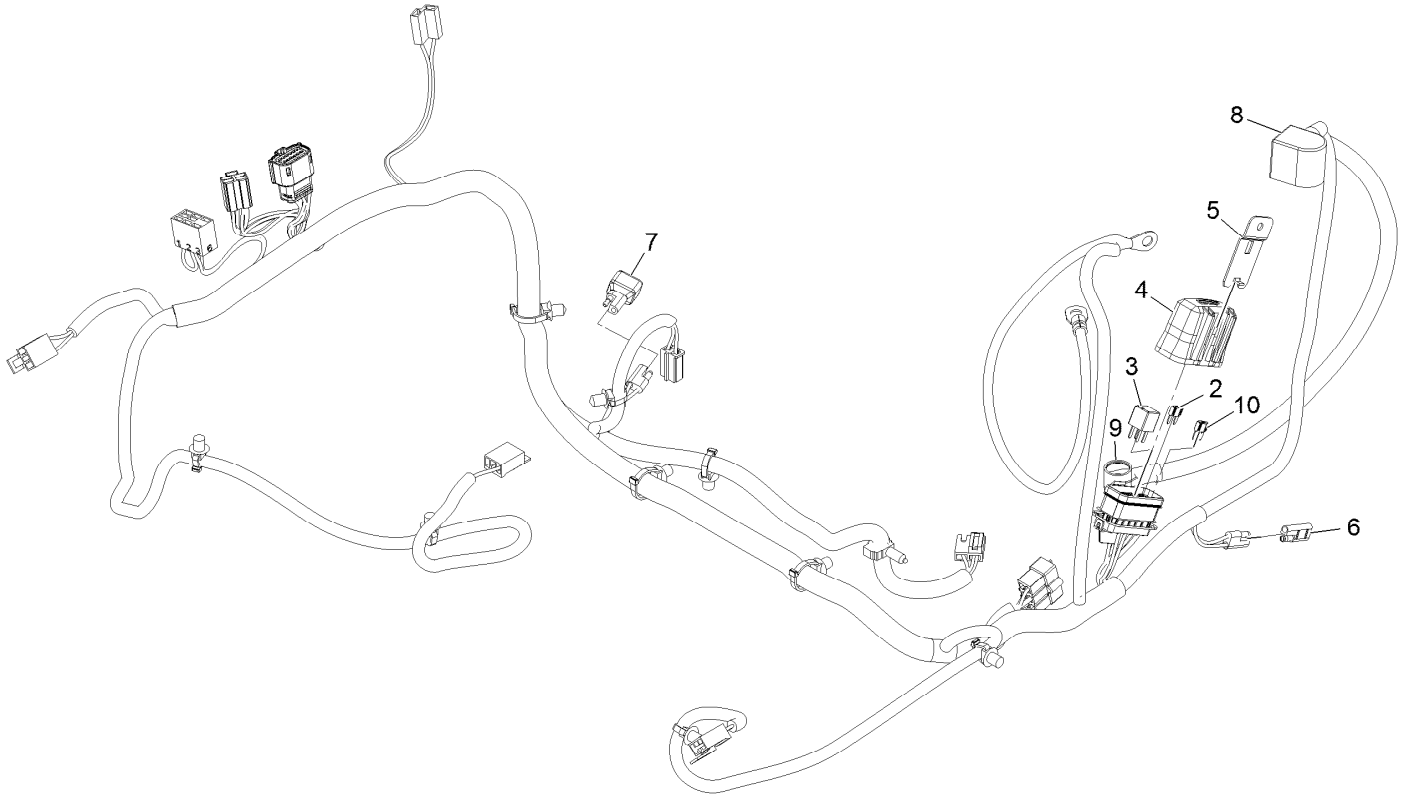

Wire Harness Assembly No. 126-5803 (continued)

Ref.	Part Number	Qty.	Description
2	121-8868	1	Fuse-Mini Blade, 20 Amp
3	126-3991	1	Relay-Micro
4	32180-176	1	Cover-Block, Fuse
5	32180-177	1	Clip-Mounting
6	116-0053	1	Cap-Plug
7	103-3895	1	Diode
8	126-8876	1	Insulator-Battery
9	1-543393	1	Insulator-Solenoid
10	121-8867	1	Fuse-Mini Blade, 15 Amp

Deck Lift Assembly

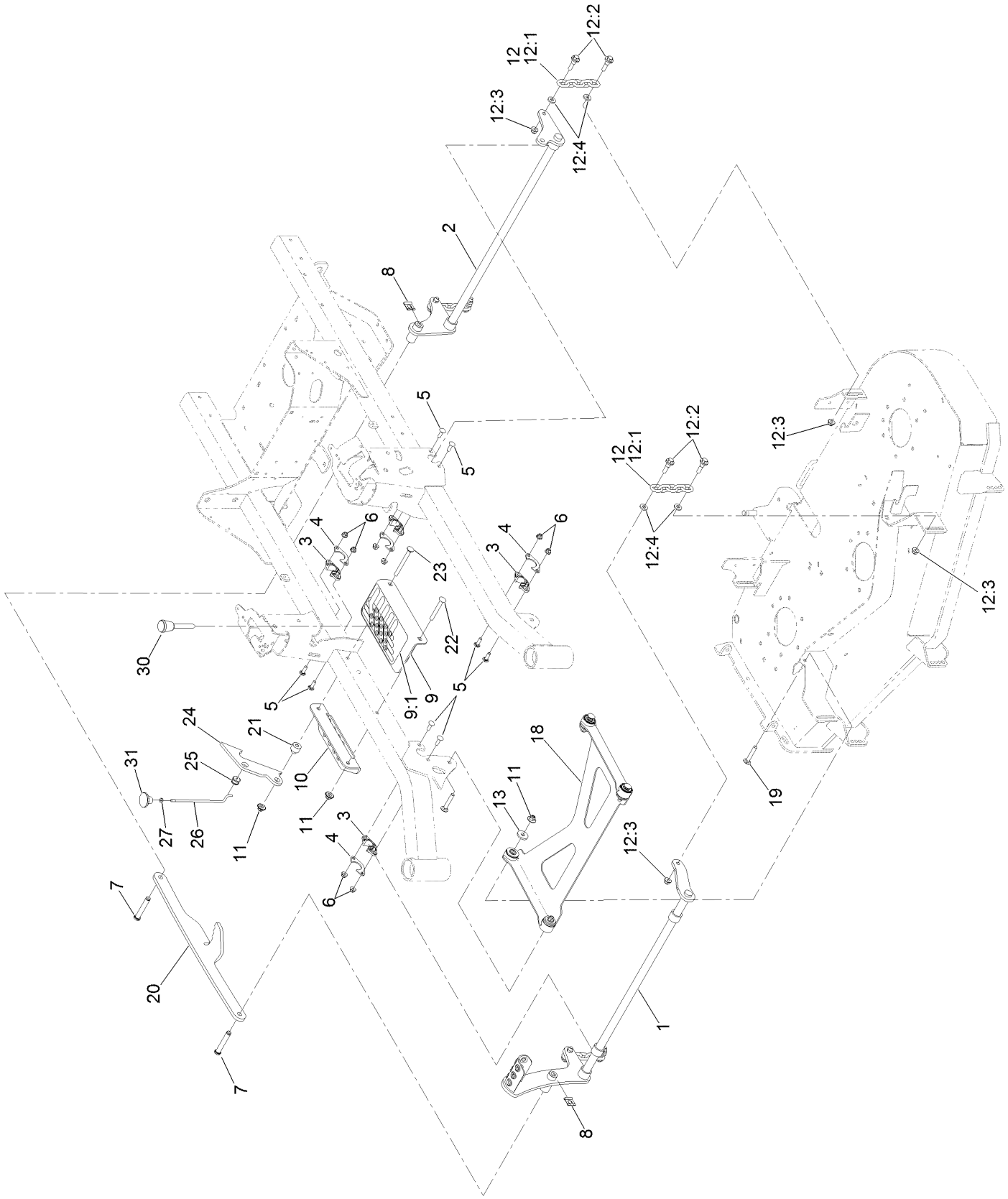

Deck Lift Assembly (continued)

Ref.	Part Number	Qty.	Description
1	126-3342-03	1	Shaft-Lift, Deck
2	126-3343-03	1	Shaft-Lift, Deck (Rear)
3	115-5065	4	Bushing-Flange
4	116-2887	4	Gusset-Lift, Deck
5	3230-22	8	Screw-CARR
6	104-8300	8	Nut-HF, NI
7	126-9181	2	Pin-Clevis
8	95-4064	2	Clip-Pin
9	126-4535	1	Bracket ASM
9:1	126-4784	1	Decal-HOC
10	126-4640-03	1	Angle-HOC, Lower
11	109-6658	4	Nut-Flange, NI
12	126-8877	4	Deck Chain ASM
12:1	1-633447	1	Chain-Lift, Deck
12:2	130-0742	2	Bolt-Shoulder
12:3	104-8301	2	Nut-HF, NI
12:4	43-0940	2	Spacer
13	1-373034	2	Washer
18	126-8365	1	Deck Strut ASM
19	3231-7	2	Screw-CARR
20	126-4639-03	1	Link-HOC
21	126-5221	1	Spacer-Stepped
22	3231-42	1	Screw-CARR
23	135-0313	1	Screw-CARR
24	126-5222	1	Plate-Lock, Transport
25	126-5593	1	Grommet
26	126-5223	1	Rod-Lock, Transport
27	3218-1	1	Nut-Jam
30	126-5401	1	Pin-HOC
31	126-7019	1	Knob

Deck Strut Assembly No. 126-8365

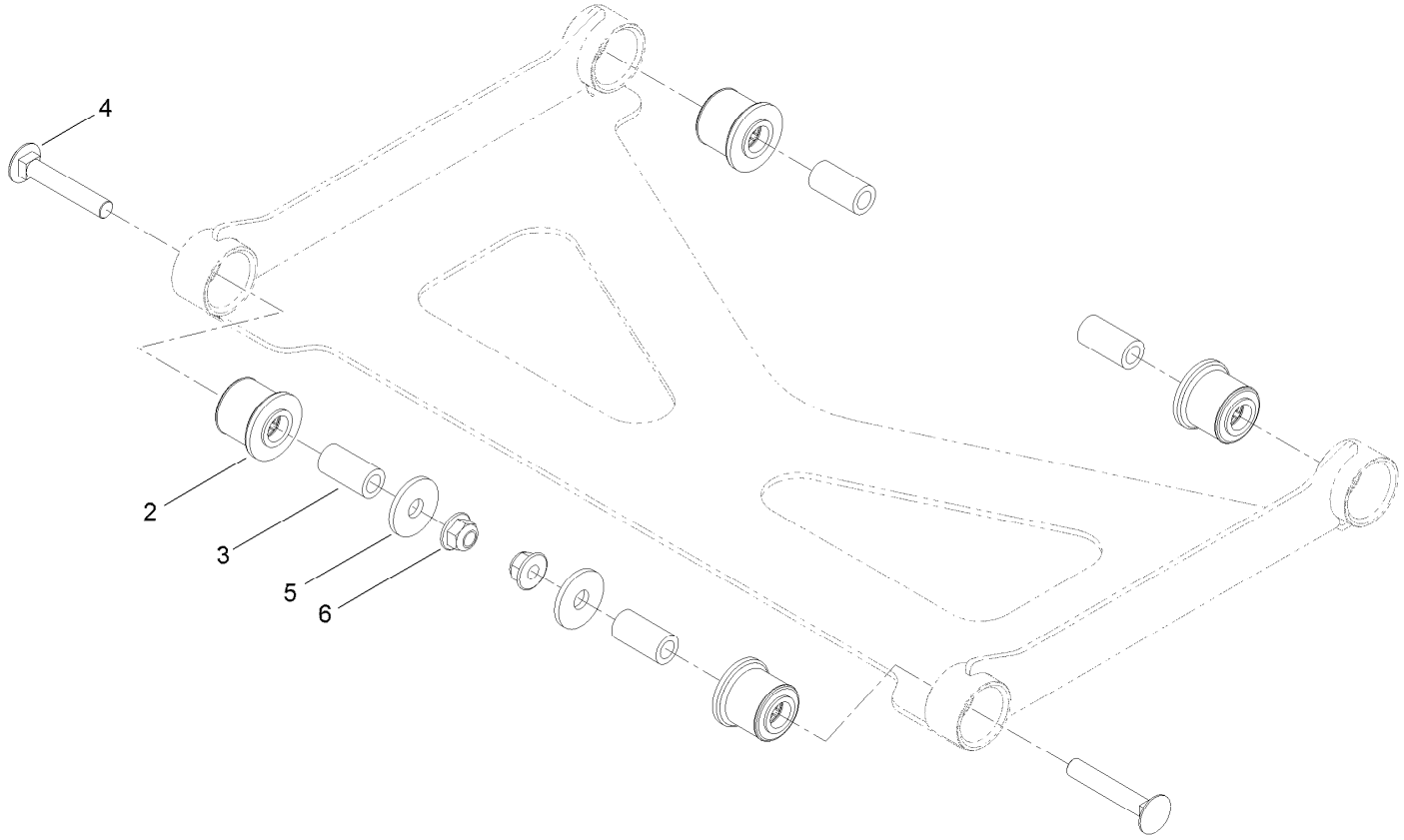

Deck Strut Assembly No. 126-8365 (continued)

Ref.	Part Number	Qty.	Description
2	126-8360	4	Bushing-Rubber, Suspension
3	108-6544	4	Spacer
4	3231-7	2	Screw-CARR
5	2844	2	Washer
6	104-8301	2	Nut-HF, NI

Engine Assembly

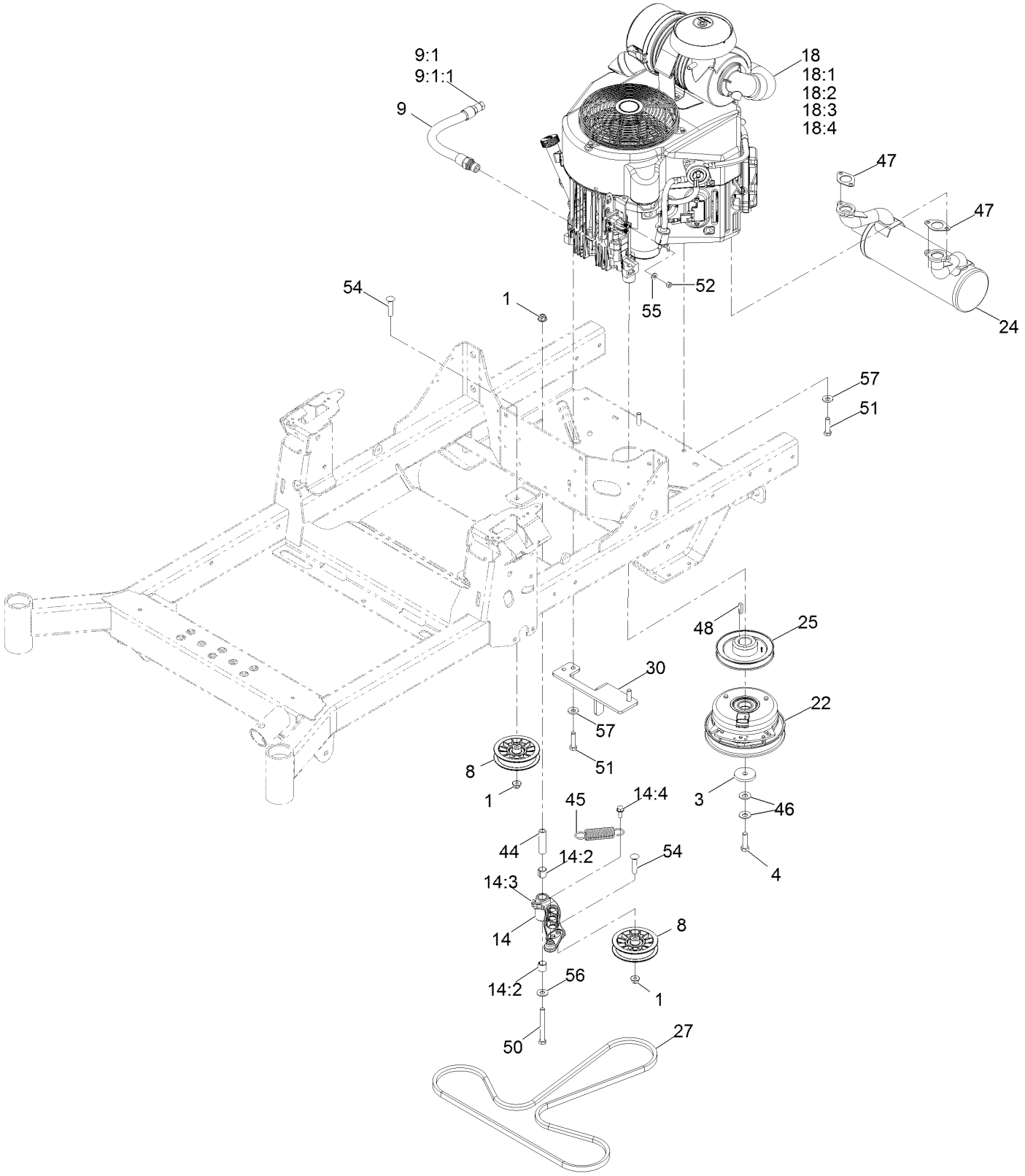

Engine Assembly (continued)

Ref.	Part Number	Qty.	Description
1	104-8301	3	Nut-HF, NI
3	109-6919	1	Washer-Clutch
4	109-9761	1	Screw-HH ❑
8	116-2456	2	Pulley-Flat Idler
9	116-4924	1	Engine Oil Drain Hose ASM ■
9:1	353-508	1	Plug-HH ●
9:1:1	237-42	1	O-Ring
14	126-0973	1	Idler Arm ASM
14:2	1-513034	2	Sleeve-Bearing
14:3	302-40	1	Fitting-Grease, 90 DEG
14:4	32144-11	1	Screw-HWH
18		1	Engine-Kawasaki, Fx651V ▲◆
18:1		1	Kawasaki 49065-7007 Engine Oil Filter ▲◆
18:2		1	Kawasaki 49019-7005 Fuel Filter ▲◆
18:3		1	Kawasaki 11013-7045 Safety Filter ▲◆
18:4		1	Kawasaki 11013-7044 Engine Air Filter ▲◆
22	126-4324	1	Clutch
24	126-4360	1	Muffler
25	126-5358	1	Sheave (W/Hub)
27	126-5993	1	Belt-V
30	126-6687-03	1	Anchor-Clutch
44	1-603384	1	Bushing-Pivot, Idler
45	1-603402	1	Spring-Extension
46	1-603610	2	Washer-Spring
47	1-653313	2	Gasket-Exhaust
48	1-807259	1	Key
50	323-15	1	Screw-HH
51	323-8	4	Screw-HH
52	3217-5	1	Nut-Hex
54	3231-29	2	Screw-CARR
55	3256-22	1	Washer-Flat
56	3256-4	1	Washer-Flat
57	98-5975	4	Washer-Belleville

● Torque to 24-26 ft-lb
▲ Not serviced separately
❑ Use Pro-Lock, Nut Type (P/N 1-840022, .5ml tube) on threads.
■ Torque to 23-29 ft-lb
◆ Obtain parts from www.kawpower.com

Deck Assembly

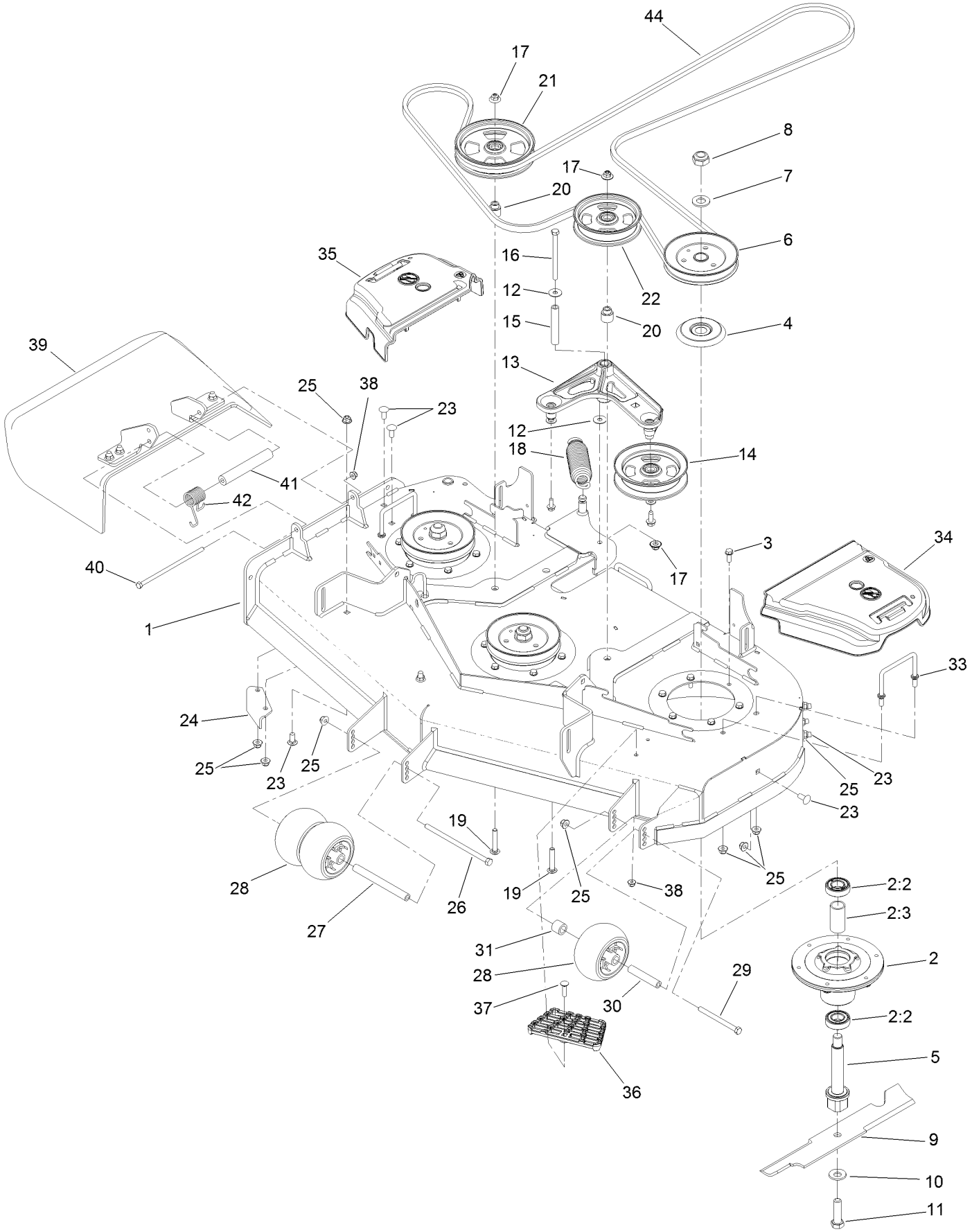

Deck Assembly (continued)

Ref.	Part Number	Qty.	Description
1	127-6798	1	Deck Decal Assembly
2	120-5477	3	Spindle ASM
2:2	116-0720	2	Bearing-Ball
2:3	115-2641	1	Spacer-Bearing
3	32144-41	18	Screw-Taptite
4	117-7210	3	Shield-Bearing
5	133-2126	3	Shaft-Spindle
6	120-7854	3	Pulley-B Section
7	92-5836	3	Washer
8	3296-67	3	Nut-Lock, NI
9	133-2137	3	Blade-Rotary, 16.5In (Hi Flow)
10	125-1736	3	Washer-Belleville
11	51-4060	3	Screw-Blade
12	52-2860	2	Washer
13	126-0976	1	Idler Arm ASM
14	132-9425	1	Pulley-Idler, Flat
15	116-5111	1	Bushing
16	323-38	1	Screw-HH
17	109-6658	3	Nut-Flange, NI
18	116-6317	1	Spring-Extension
19	3231-40	2	Bolt-CARR
20	126-7684	2	Bushing-Idler
21	136-5404	1	Pulley-Idler, Flat
22	136-5405	1	Pulley-Idler, Flat
23	3231-27	9	Screw-CARR
24	107-8541-01	1	Baffle-Discharge
25	104-8301	15	Nut-HF, NI
26	108-5388	1	Screw-HH
27	98-5967	1	Spacer-Wheel
28	1-603299	3	Roller-Scalp, Anti
29	323-23	1	Screw-HH
30	98-7912	1	Tube-Spanner
31	98-7913	1	Tube-Spacer
33	109-6982	2	Wireform-Cover
34	109-6936	1	Cover-Belt, LH
35	109-6935	1	Cover-Belt, RH
36	126-4781-03	1	Step-Deck
37	3230-3	1	Screw-CARR
38	104-8300	2	Nut-HF, NI
39	108-2792	1	Rubber Deflector ASM
40	322-50	1	Screw-HH
41	105-4622	1	Spacer
42	108-4052	1	Spring-Torsion
44	116-3111	1	Belt-V

Deck Decal Assembly No. 127-6798

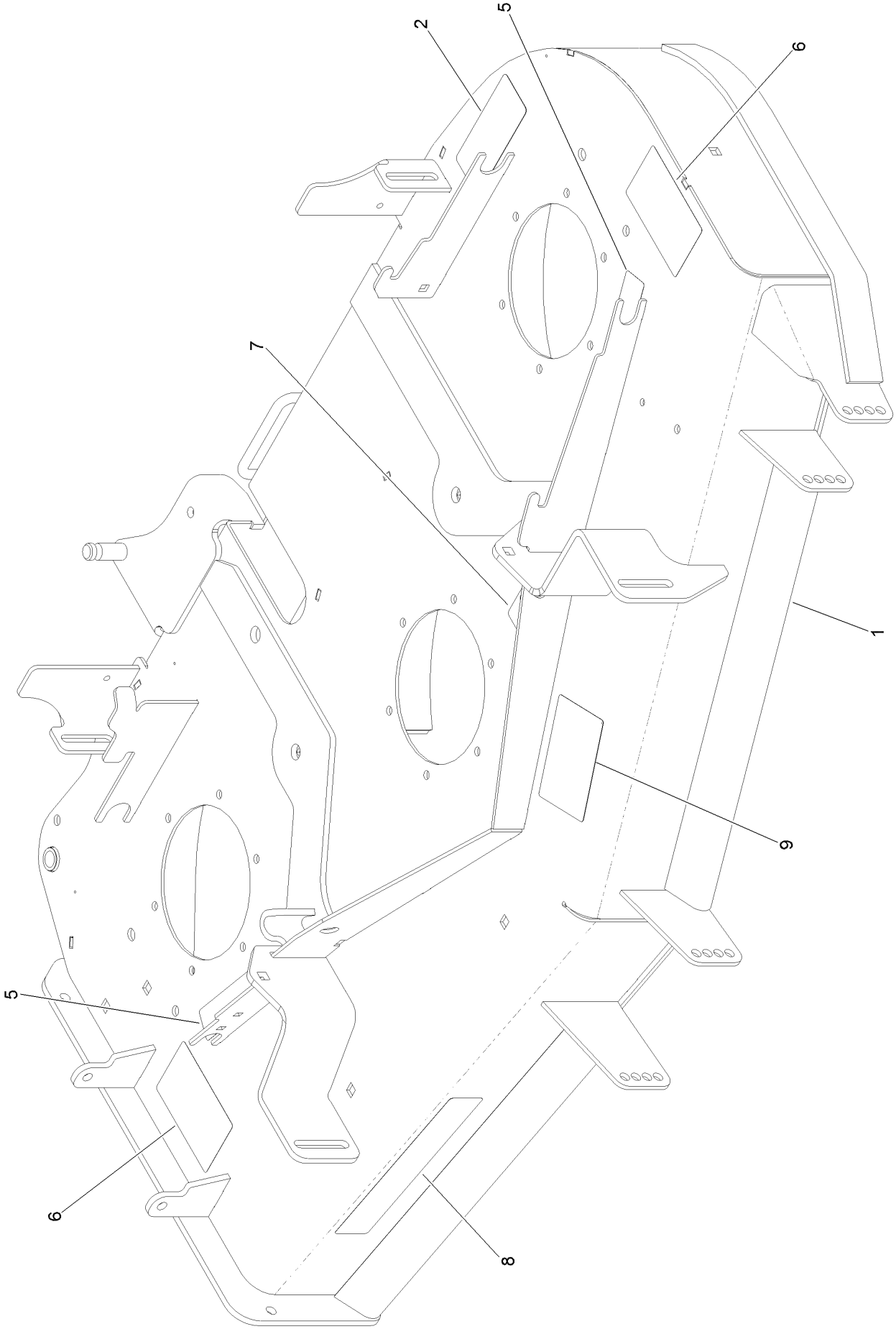

Deck Decal Assembly No. 127-6798 (continued)

Ref.	Part Number	Qty.	Description
1		1	Deck Decal Assembly ●
2	93-7818	1	Decal-Torque, Blade Bolt
5	112-9028	2	Decal-Cover, Missing
6	117-3848	2	Decal-Danger
7	109-6035	1	Decal-Routing, Belt
8	121-3204	1	Decal
9	127-0326	1	Decal-Scalp, Anti

● Not serviced separately

Idler Arm Assembly No. 126-0976

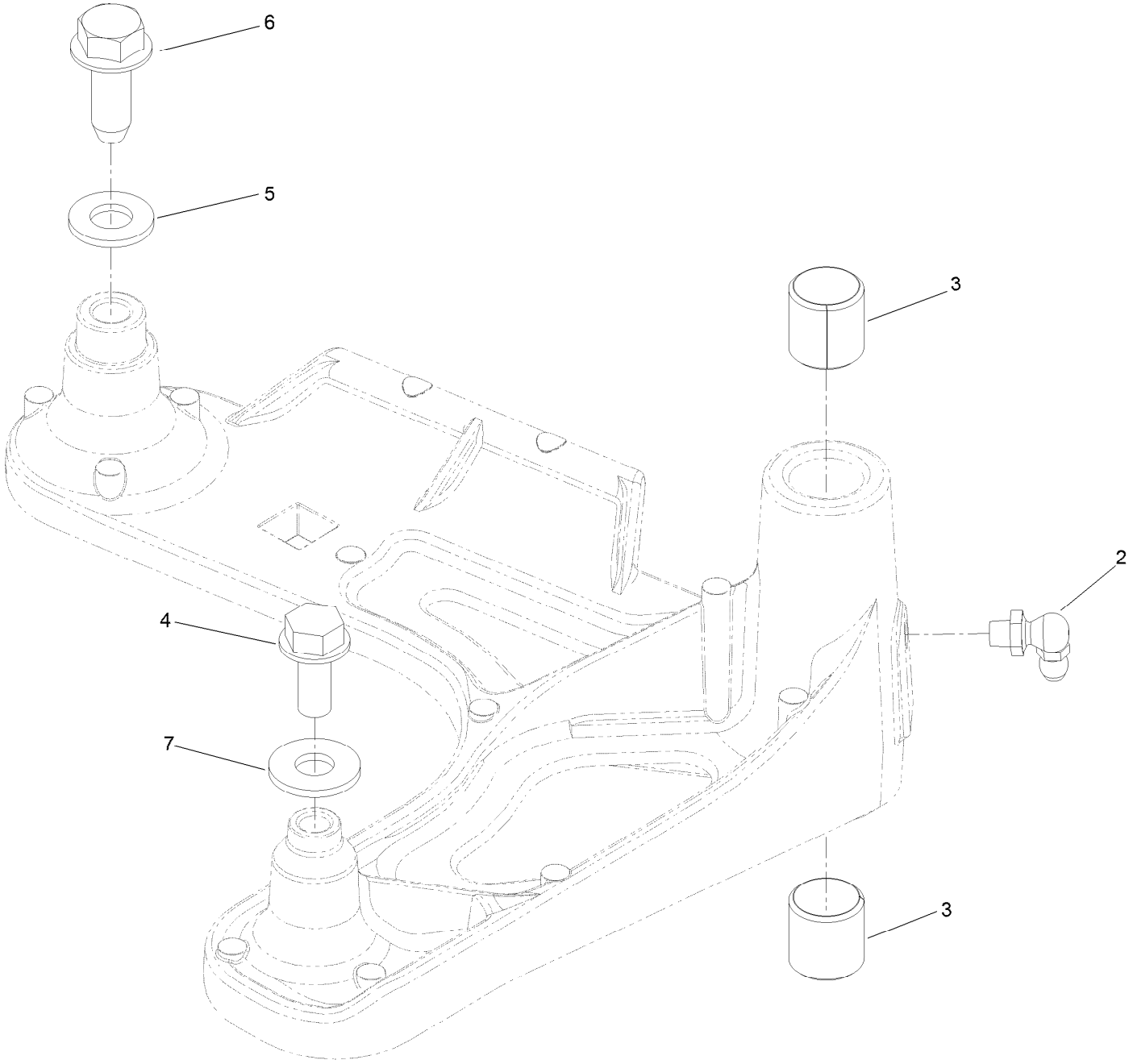

Idler Arm Assembly No. 126-0976 (continued)

Ref.	Part Number	Qty.	Description
2	302-40	1	Fitting-Grease, 90 DEG
3	1-513034	2	Sleeve-Bearing
4	32144-11	1	Screw-HWH
5	3256-24	1	Washer-Plain
6	126-1696	1	Screw-HWHTF
7	3256-3	1	Washer-Flat

Rubber Deflector Assembly No. 108-2792

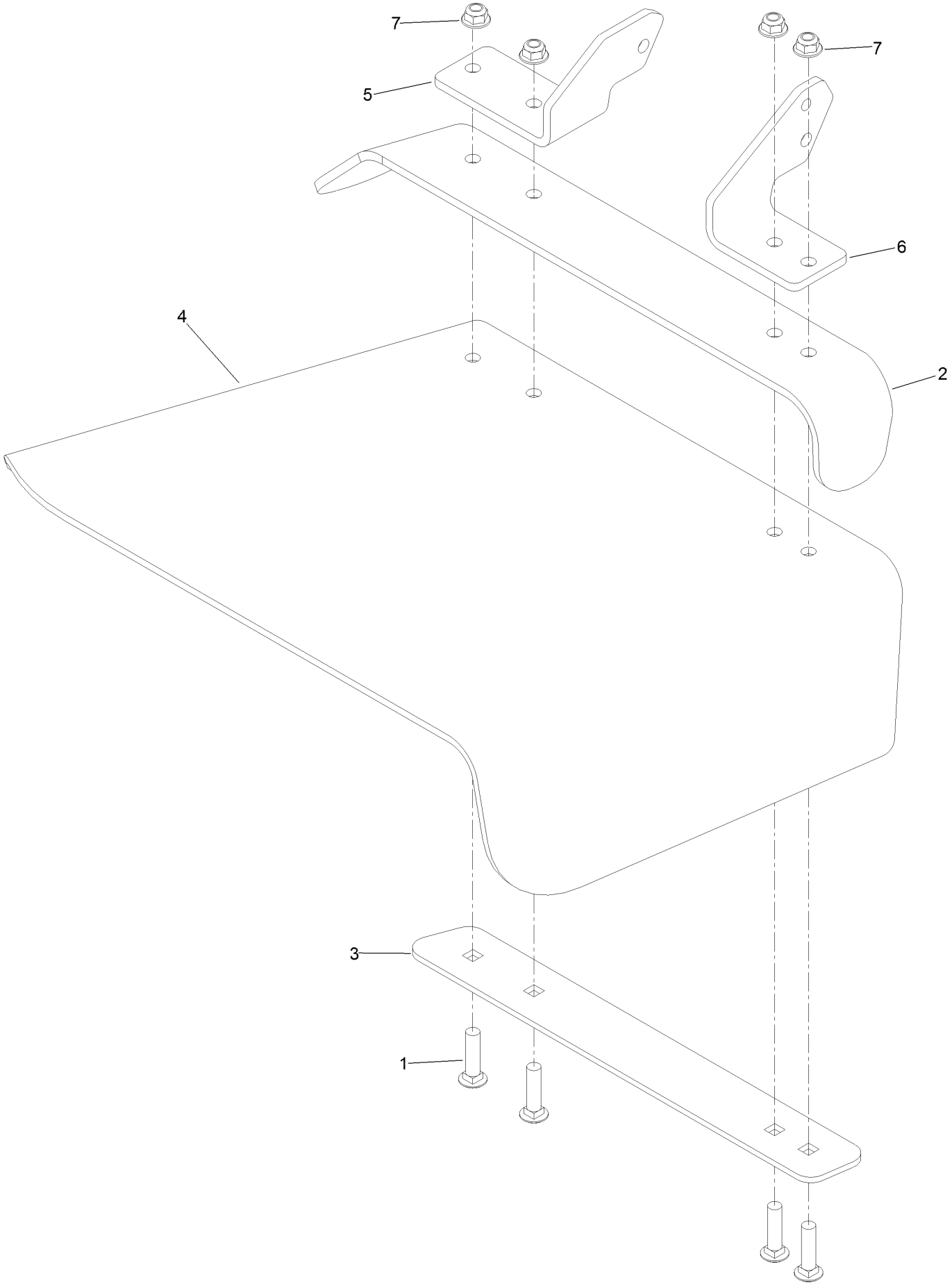

Rubber Deflector Assembly No. 108-2792 (continued)

Ref.	Part Number	Qty.	Description
1	3231-4	4	Screw-CARR
2	106-3246-01	1	Deflector
3	106-3248-03	1	Strap-Discharge
4	108-5029	1	Deflector-Rubber
5	108-4059-01	1	Plate-Hinge, Rear
6	106-3253-01	1	Plate-Hinge, Front
7	104-8301	4	Nut-HF, NI

Attachments and Accessories

For 74470 48in TITAN HD 2500 Series Riding Mower

Product Name	Model/Part
Hypr-Oil 500 (quart)	114-4713
Hypr-Oil 500 (gallon)	114-4714
Hypr-Oil 500-5 (5 gallon)	114-4715
Toro Hydro Kit	121-3783
LED Light Kit	126-5382
Front Bucket Bracket Kit	126-7011
Striper Kit	126-7882
Sunshade Kit	126-8077
Cover-Hitch	126-8299
Trash Container Kit	126-8379
Weight Caster Kit	126-8639
Flat Free Wheel and Bearing Kit	126-9368
Jack Kit	127-6666
MVP Belt and Blade Kit	127-6792
Engine Maintenance Kit-Kawasaki FX	133-1307
Hi-Back Seat Cover	133-1308
Blade-Rotary, 16.5in (Hi Flow)	133-2137
Blade-Rotary, Atomic 16.5	133-2160
Blade-Rotary, Recycling 16.5in	133-2163
48in Recycler Kit	133-2168
Blade (6 Pack) 16.5in Hi Flow	133-2176
Blade (6 Pack) 16.5in Recycle	133-2179
Blade (6 Pack) 16.5in Atomic	133-2182
5 Gallon Bucket	133-2533
Trimmer Mount Kit	136-1682
ROPS Pin Kit	136-1683
Bucket Mount Kit	136-9045
Universal Mount Kit Mower	136-9046
Titan HD Triple Threat Attachment Kit	136-9047
Toro Deluxe Rider Cover	490-7319
Heavy Duty Bagger Kit	78431
48in Completion Kit (Heavy Duty Bagger)	78436
Standard EZ Vac Bagger	78481
48in Completion Kit (Standard Bagger)	78486

Notes:

Notes:

Notes:

TORO®

Count on it.