FORM NO. 3311-782

TORO®

21" H.P. MODEL NO. 16880-1000001 & UP
21" S.P. MODEL NO. 16890-1000001 & UP

PARTS CATALOG

21" H.P. & S.P. TORO STANDARD

FINGERTIP START REAR BAGGER

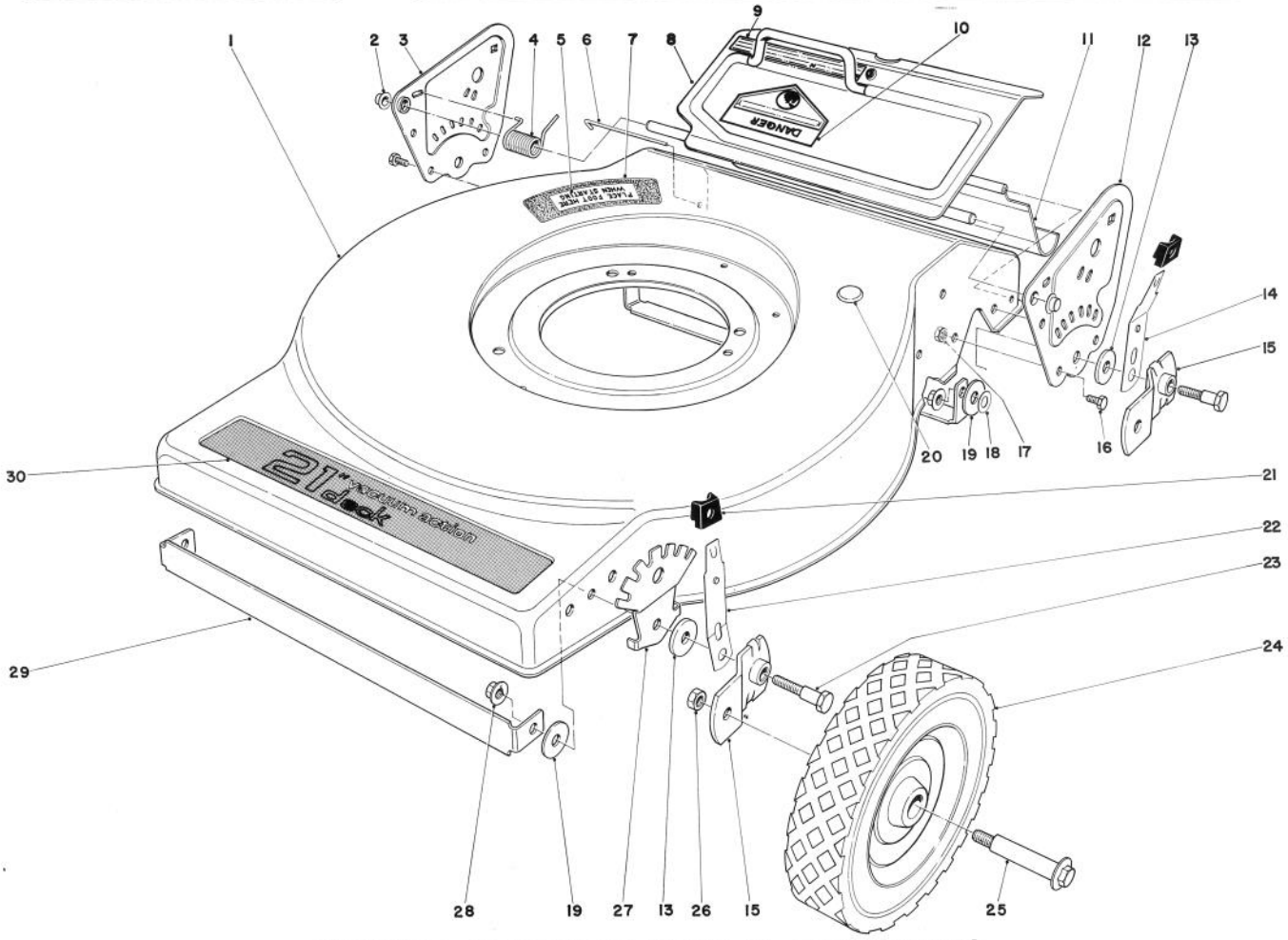

MOWER HOUSING (MODEL NO. 16880)

Ref. No.	Part No.	Description	No. Used
1	8-7799	Housing	1
2	3290-320	Retainer Push On	2
3	37-4380	Side Plate R. H.	1
4	37-9420	Torsion Spring	1
5	36-2820	Decal – Step Pad	1
6	33-3204	Shield Rod	1
7	37-0030	Step Pad	1
8	38-0700	Door Handle	1
9	39-9090	Decal – Door Caution	1
10	39-5770	Decal – Danger	1
11	36-6330	Rear Shield	1
12	37-4390	Side Plate L. H.	1
13	33-0390	Pivot Washer	4
14	37-4830	Spring Arm	2
15	24-7710	Pivot Arm "A"	2
*	23-9120	Pivot Arm "B"	2

Ref. No.	Part No.	Description	No. Used
16	321-2	Capscrew	6
17	32152-4	Locknut	6
18	3256-23	Washer	2
19	5-1350	Washer	4
20	2410-54	Plug	1
21	25-7740	Knob Arm	4
22	25-8000	Spring Arm	2
23	36-6670	Pivot Screw	4
24	12-2620	Wheel & Tire Assembly	4
25	3-2652	Wheel Bolt	4
26	32146-6	Locknut	4
27	36-6780	Quadrant	2
28	32128-30	Locknut Flange	4
29	36-6830	Support Deck	2
30	39-9060	Decal – Deck	1

*Not Illustrated

COPYRIGHT © ALL RIGHTS RESERVED

The Toro Company – 1981
MINNEAPOLIS, MN 55420 – U.S.A.

PRICE $1.00

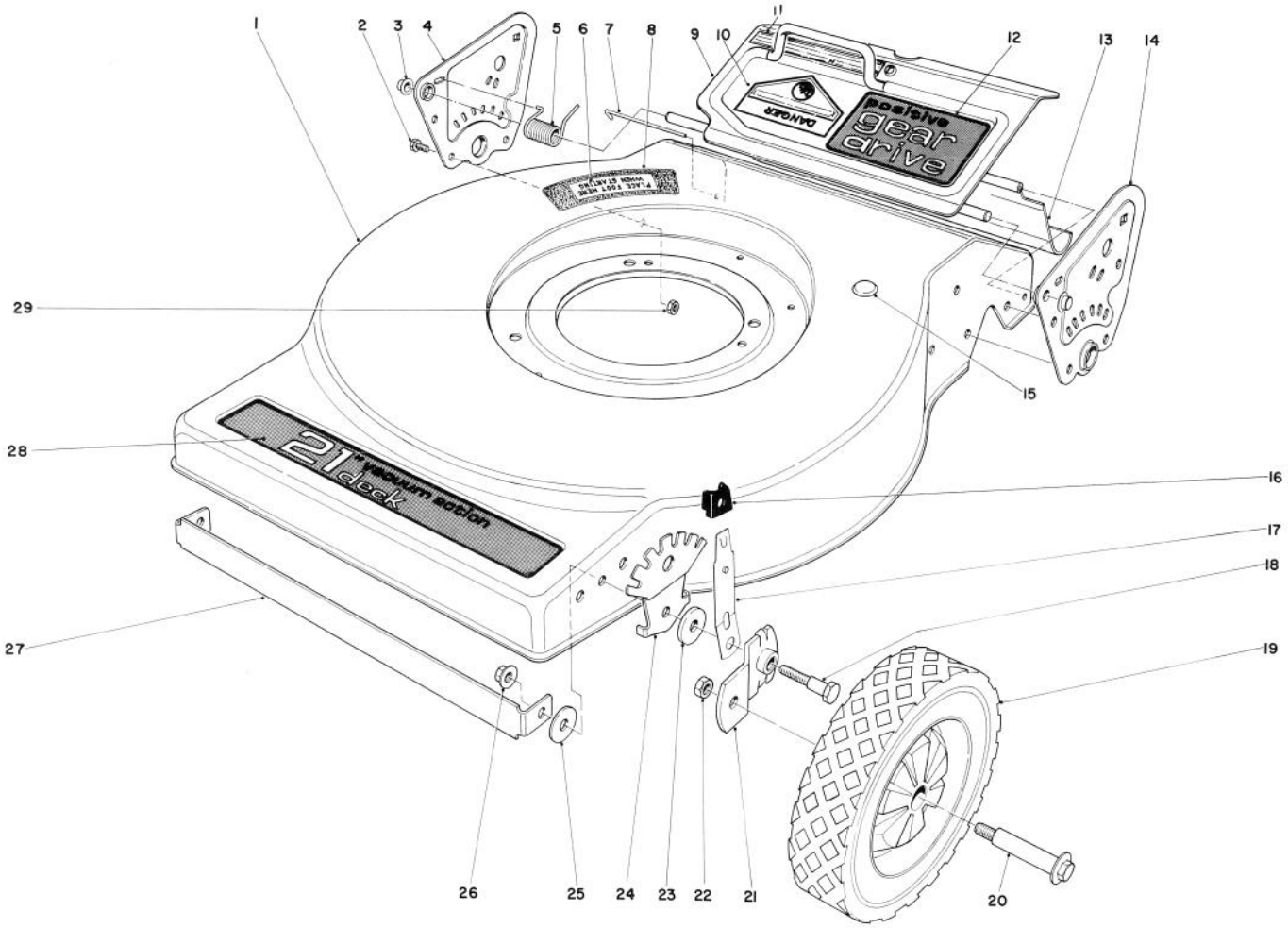

MOWER HOUSING (MODEL NO. 16890)

Ref. No.	Part No.	Description	No. Used
1	8-7789	Housing	1
2	321-2	Capscrew	6
3	3290-320	Retainer Push On	2
4	37-1450	Side Plate R. H.	1
5	37-9420	Torsion Spring	1
6	36-2820	Decal – Step Pad	1
7	33-3204	Rod Shield	1
8	37-0030	Step Pad	1
9	38-0700	Rear Door	1
10	39-5770	Decal – Danger	1
11	39-9090	Decal – Caution	1
12	39-9100	Decal – Door	1
13	36-6330	Rear Shield	1
14	37-1440	Side Plate L. H.	1
15	2410-54	Plug	1

Ref. No.	Part No.	Description	No. Used
16	25-7740	Knob Arm	2
17	25-8000	Spring Arm	2
18	36-6670	Pivot Screw	2
19	27-6200	Wheel & Tire Assembly	2
20	27-6230	Wheel Bolt	2
21	24-7710	Pivot Arm "A"	1
*	23-9120	Pivot Arm "B"	1
22	32146-6	Locknut	2
23	33-0390	Pivot Washer	2
24	36-6780	Quadrant	2
25	5-1350	Washer	2
26	32128-30	Flange Locknut	2
27	36-6830	Support Deck	1
28	39-9060	Decal – Deck	1
29	32152-4	Locknut	6

*Not Illustrated

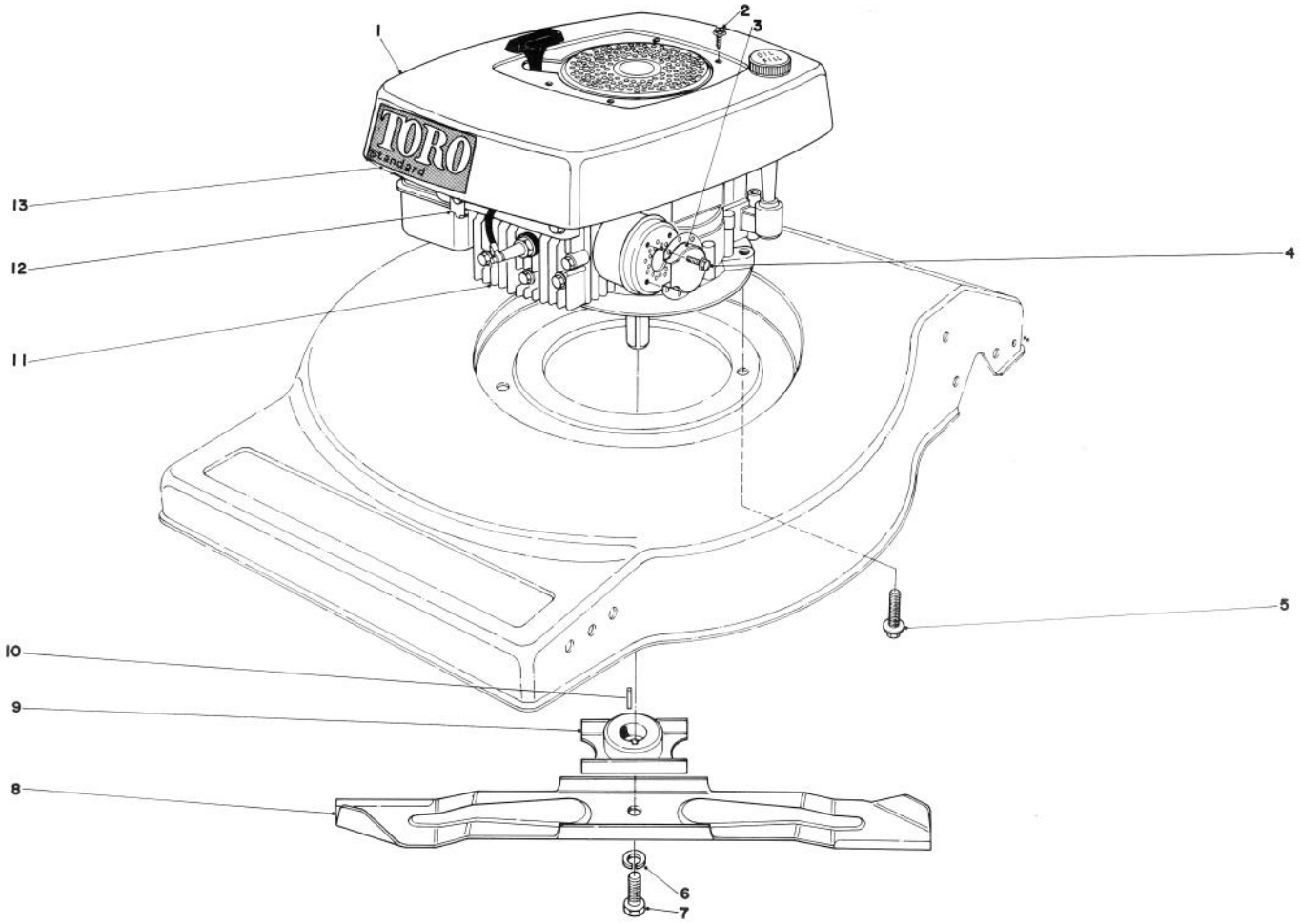

ENGINE ASSEMBLY (MODEL NO. 16880)

Ref. No.	Part No.	Description	No. Used
1	28-6772	Shroud	1
2	32104-94	Screw	4
3	2210-184	Muffler Deflector	1
4	2210-173	Screw	2
5	11-0590	Capscrew Hex Hd. Thd. Forming	3
6	3253-22	Lockwasher	1
7	3-5246	Screw Special	1

Ref. No.	Part No.	Description	No. Used
8	26-0880	Blade	1
9	20-2750	Blade Retainer	1
10	7-0036	Square Key	1
11	221-599	Engine	1
12	38-7580	Control Bracket	1
13	39-9050	Decal — Shroud	1

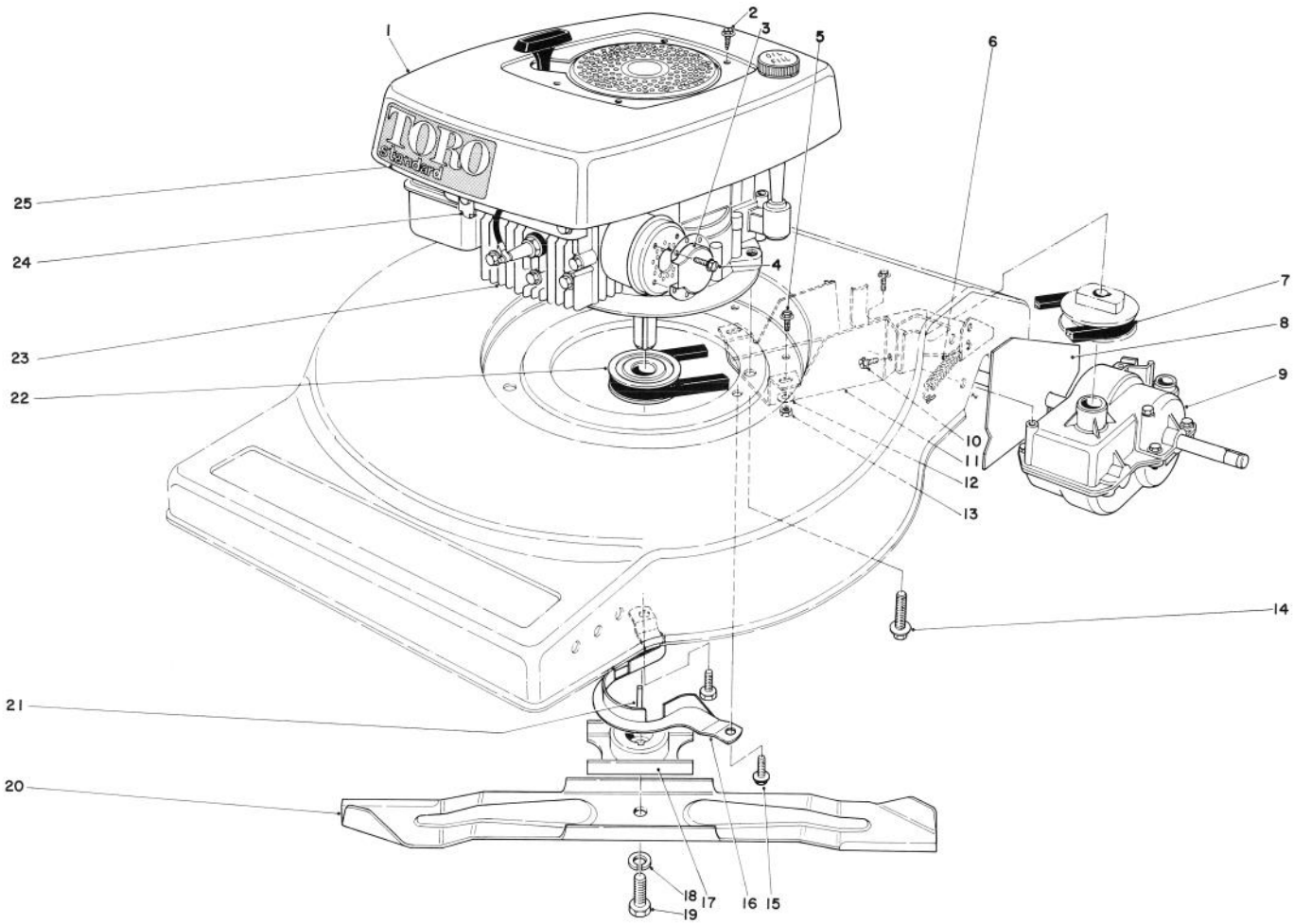

ENGINE ASSEMBLY (MODEL NO. 16890)

Ref. No.	Part No.	Description	No. Used
1	28-6772	Shroud	1
2	32104-94	Screw	4
3	2210-184	Muffler Deflector	1
4	2210-173	Screw	2
5	3290-321	Hex Hd. Screw	2
6	23-7750	Idler Spring	1
7	38-0480	V-Belt	1
8	38-7740	Grass Shield	1
9	8-7819	Gear Case Assembly Complete	1
10	32104-76	Self Tapping Screw	2
11	38-0510	Belt Cover	1
12	3256-14	Washer	2
13	32146-18	Locknut	2

Ref. No.	Part No.	Description	No. Used
14	11-0590	Capscrew Hex Hd.Thd.Forming	3
15	11-9760	Screw	2
16	39-1840	Belt Guide	1
17	20-2750	Blade Retainer	1
18	3253-22	Lockwasher	1
19	3-5246	Special Screw	1
20	26-0880	Blade	1
21	27-8590	Key Square	1
22	21-5580	Pulley Driver	1
23	221-599	Engine	1
24	38-7580	Control Bracket	1
25	39-9050	Decal – Shroud	1

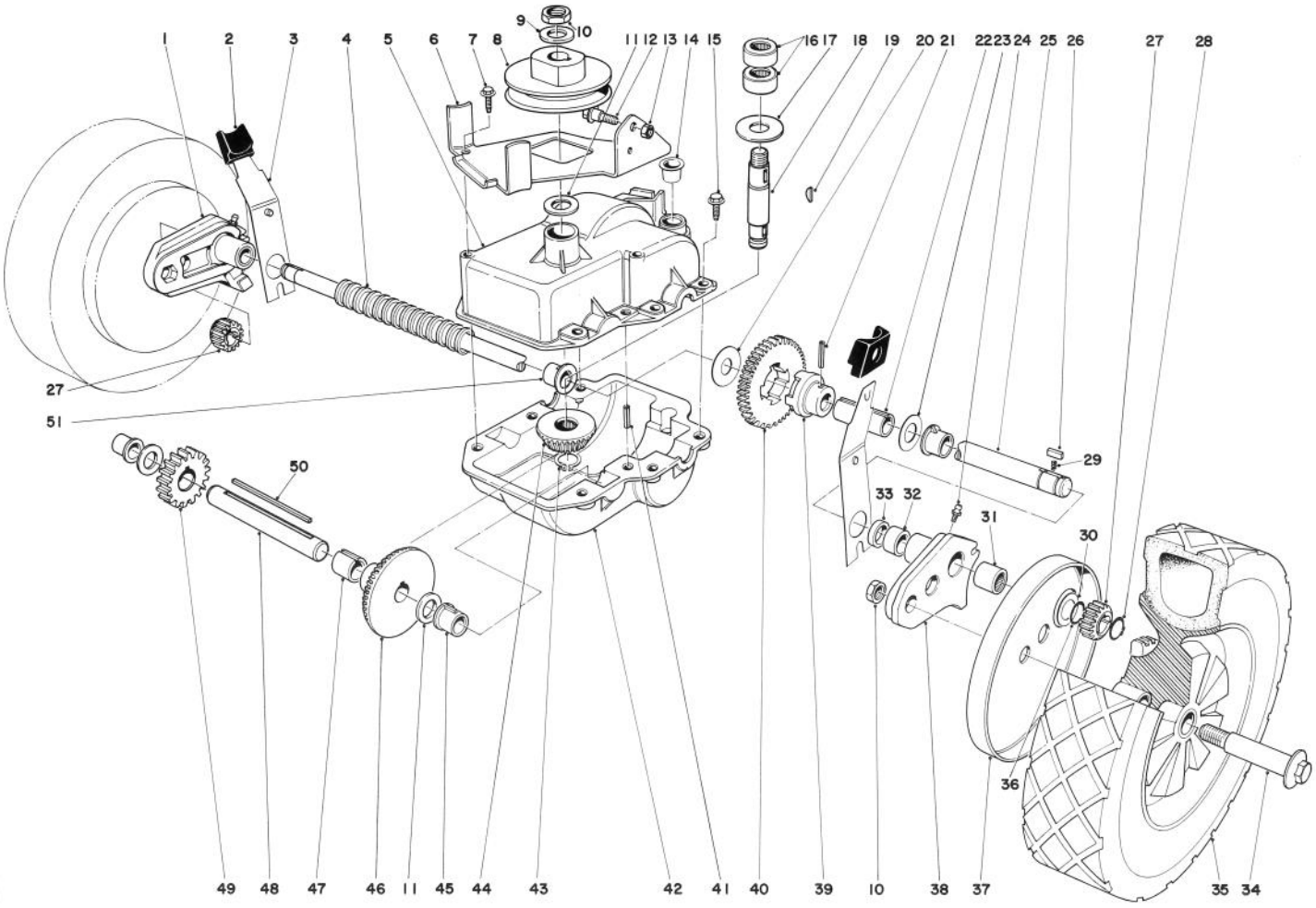

GEAR CASE ASSEMBLY (MODEL NO. 16890)

Ref. No.	Part No.	Description	No. Used
1	29-9590	Pivot Arm R.H. (Incl. Ref. #24 & 31-33)	1
2	25-7740	Knob Arm	2
3	37-4820	Spring Arm	2
4	37-9281	Cover Drive Shaft	1
5	39-7280	Case Upper	1
6	37-4460	Bracket – Belt Guide	1
7	11-9760	Hex Hd. Screw Thd. Forming	2
8	39-6740	Pulley	1
9	3256-45	Washer	1
10	32146-6	Locknut	1
11	36-4790	Thrust Washer	3
12	3296-42	Locknut	1
13	42-3560	Shoulder Bolt	1
14	12-0510	Caplug	1
15	32144-44	Screw	6
16	252-97	Bearing	2
17	256-196	Thrust Washer	1
18	39-6690	Input Shaft	1
19	3257-1	Key – Woodruff	2
20	29-9690	Washer	1
21	32121-95	Coil Pin	1
22	36-9120	Spacer – Output Shaft	1
23	36-4780	Thrust Washer	1
24	302-18	Grease Fitting	2
25	39-9750	Output Shaft	1
26	39-9680	Key – Rectangular	2
27	39-9160	Pinion Gear	2

Ref. No.	Part No.	Description	No. Used
28	32151-61	Retaining Ring	2
29	39-9650	Spring	2
30	252-73	Washer	4
31	252-96	Needle Bearing	2
32	256-110	Bushing	2
33	253-140	Seal	2
34	27-6230	Wheel Bolt	2
35	36-7790	Wheel & Tire Assembly	2
36	32151-11	Grip Ring	2
37	36-5630	Wheel Cover	2
38	29-9640	Pivot Arm L.H. (Incl. Ref. #24 & 31-33)	1
39	36-6280	Adapter – Drive	1
40	29-9270	Gear	1
41	32121-100	Roll Pin	1
42	29-9410	Lower Case	1
43	32151-57	Retaining Ring	1
44	39-6660	Pinion Bevel	1
45	29-9350	Bushing Short Shaft	2
46	39-6670	Gear – Bevel	1
47	37-4760	Spacer – Short Shaft	1
48	39-6680	Short Shaft	1
49	39-6630	Gear	1
50	39-7840	Key – Square	1
51	29-9310	Bushing	2
*	8-7819	Gear Case Assy. (Incl. Ref. #5-11, 14-23, 25 & 39-51)	1

*Not Illustrated

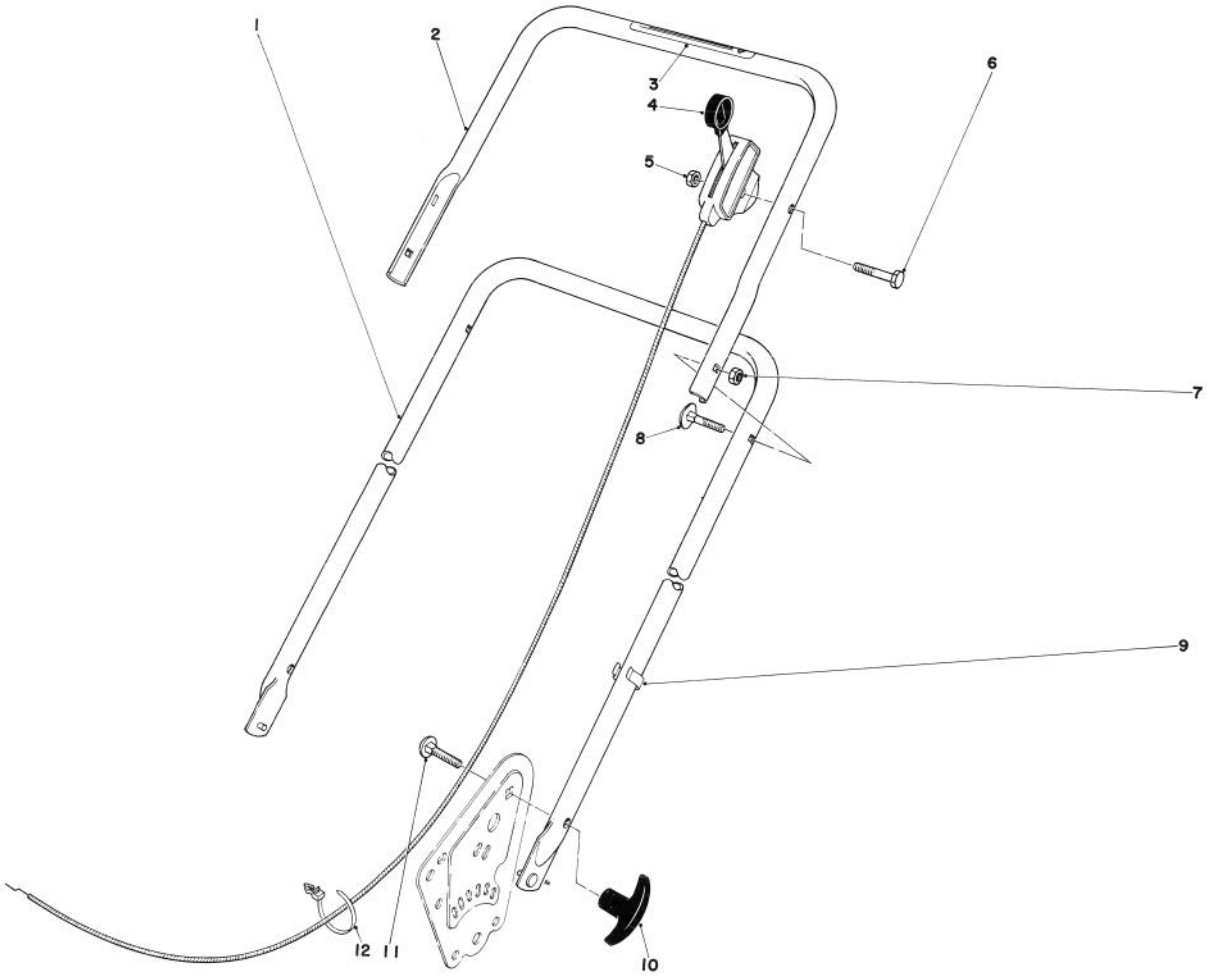

HANDLE ASSEMBLY (MODEL NO. 16880)

Ref. No.	Part No.	Description	No. Used
1	38-0810	Lower Handle	1
2	38-0620	Upper Handle	1
3	29-6290	Decal – Danger	1
4	33-2563	Throttle Control	1
5	32146-17	Locknut	1
6	321-10	Capscrew	1
7	32146-5	Locknut	2

Ref. No.	Part No.	Description	No. Used
8	6-6330	Handle Screw	2
9	218-466	Clip	1
10	233-41	Handle Knob	2
11	3230-4	Carriage Bolt	2
12	3290-410	Push Mount Tie	1
*	8-9989	Loose Parts Bag	1

*Not Illustrated

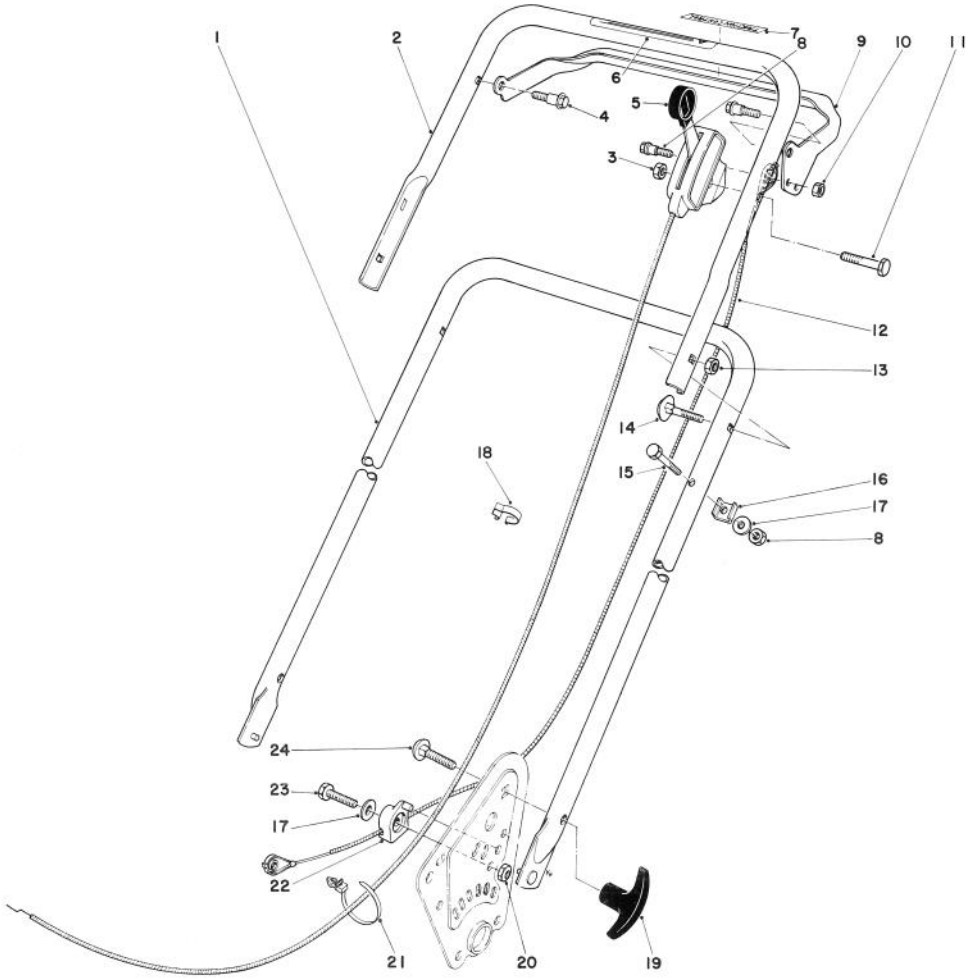

HANDLE ASSEMBLY (MODEL NO. 16890)

Ref. No.	Part No.	Description	No. Used
1	38-0810	Lower Handle	1
2	38-0620	Upper Handle	1
3	32146-17	Locknut	1
4	26-5620	Shoulder Bolt	2
5	33-2536	Throttle Control	1
6	29-6290	Decal — Danger	1
7	38-5150	Decal — Traction Control	1
8	42-3560	Shoulder Bolt	1
9	37-4480	Squeeze Lever	1
10	3296-42	Locknut	2
11	321-10	Capscrew	1
12	29-9502	Demand Handle Cable	1
13	32146-5	Locknut	2

Ref. No.	Part No.	Description	No. Used
14	6-6330	Handle Screw	2
15	321-9	Capscrew	1
16	29-9550	Cable Clamp	1
17	3256-1	Washer	2
18	218-465	Clip	1
19	233-41	Handle Knob	2
20	32152-4	Locknut	1
21	3290-410	Push Mount Tie	1
22	38-6400	Boss Cable	1
23	321-7	Capscrew	1
24	3230-4	Carriage Bolt	2
*	11-0109	Loose Parts Bag	1

*Not Illustrated

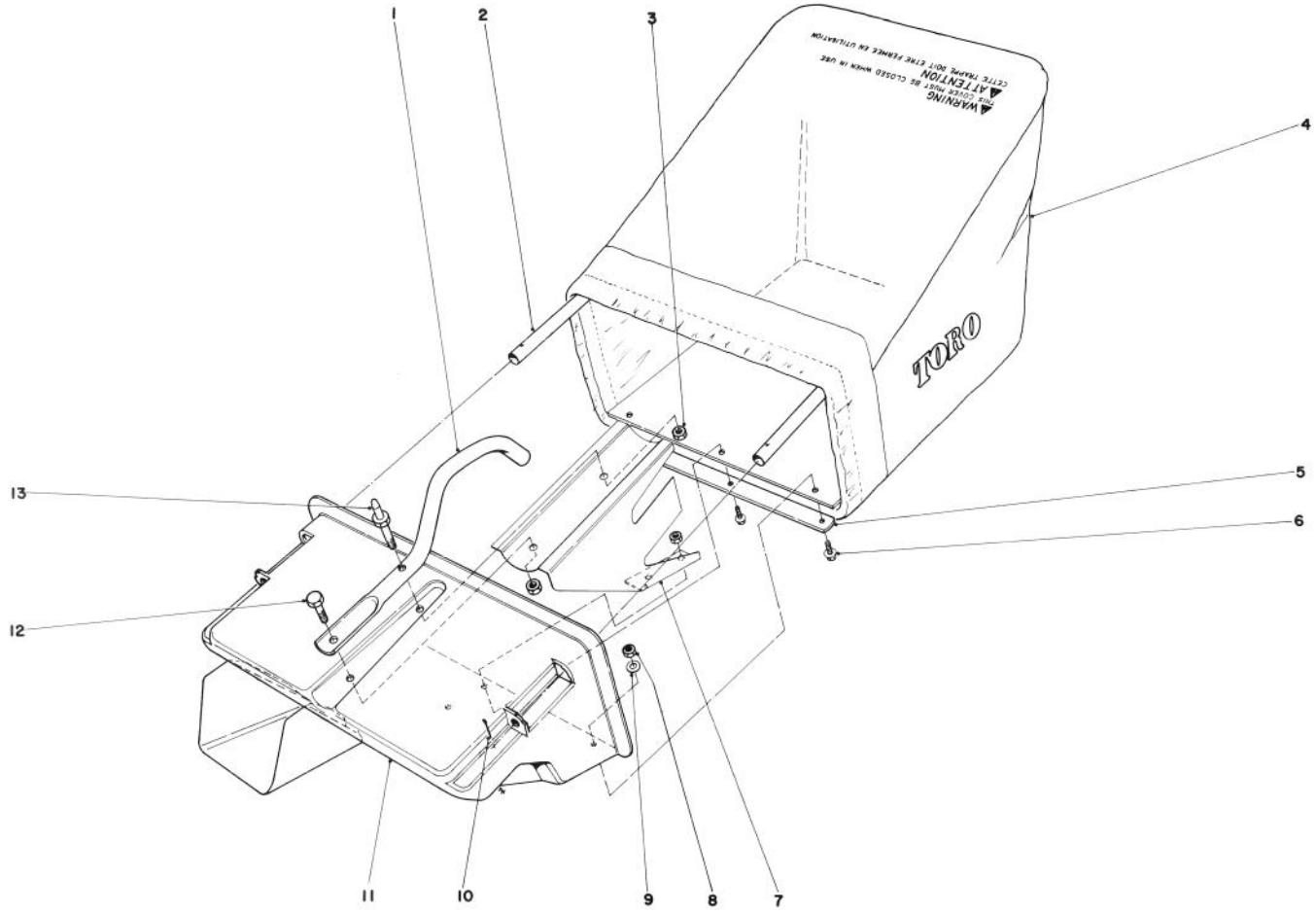

GRASS CATCHER ASSEMBLY NO. 11-0269 (MODEL NO. 16880 & 16890)

Ref. No.	Part No.	Description	No. Used
1	38-0520	Handle Bag	1
2	37-9990	Bag Frame	1
3	32146-5	Locknut	2
4	8-7939	Grass Bag	1
5	38-4690	Bag Retainer	1
6	3290-321	Hex Hd. Screw	4
7	38-1120	Baffle — Bag Shell	1

Ref. No.	Part No.	Description	No. Used
8	32146-18	Locknut	4
9	3256-14	Washer	2
10	3272-6	Cotter Pin	2
11	38-1232	Bag Shell	1
12	322-3	Capscrew	1
13	38-0530	Stud Handle	1

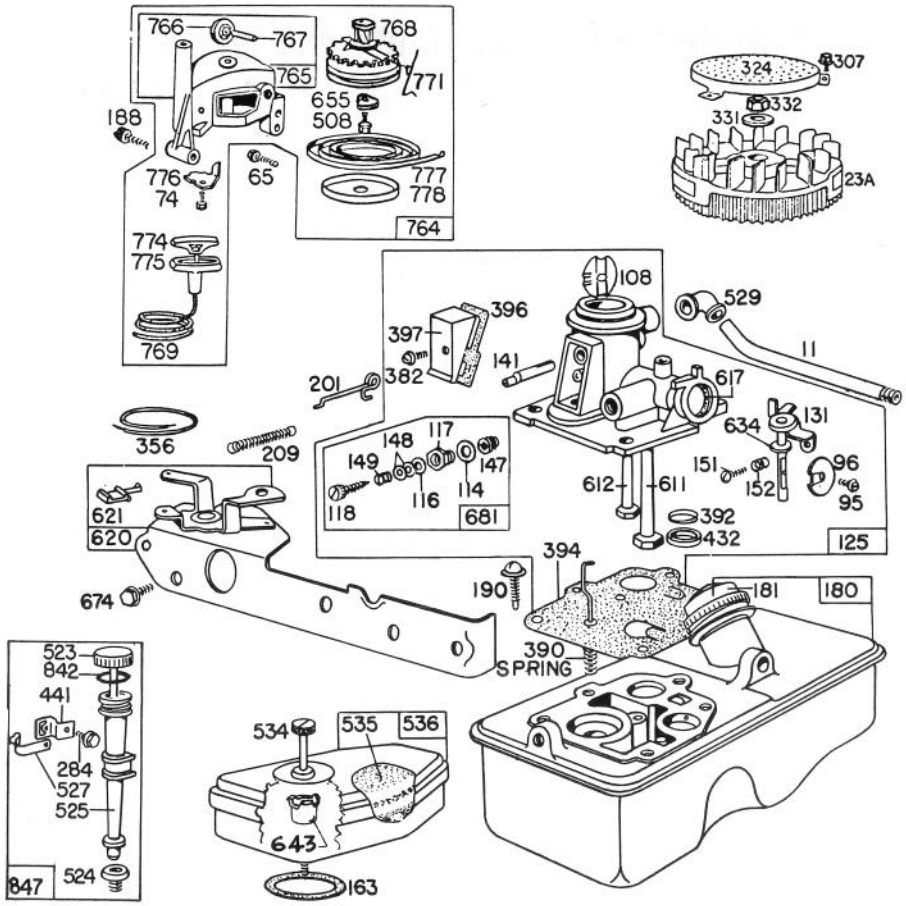

CARBURETOR ASSEMBLY BRIGGS & STRATTON
MODEL NO. 92908-2055-01

Ref. No.	Part No.	Description	No. Used
11	230802	Tube – Breather	1
23A	299982	Flywheel – Magneto	1
65	93587	Screw – Vertical Pull Starter Mtg.	1
74	93490	Screw	1
95	93499	Screw – Throttle Valve Mtg.	1
96	211237	Valve – Throttle	1
108	298819	Valve – Choke	1
114	66594	Gasket – Needle Valve Nut	1
116	65978	Packing – Needle Valve	1
117	230590	Nut – Needle Valve	1
118	23433	Valve – Needle	1
125	390065	Carburetor Assembly	1
131	299977	Shaft & Lever – Throttle	1
141	68908	Shaft – Choke	1
147	230591	Seat – Needle Valve	1
148	22235	Washer – Needle Valve	2
149	26336	Spring – Needle Valve	1
151	93524	Screw – Rd. Hd.	1
152	260746	Spring – Throttle Adj.	1
163	270816	Gasket – Air Cleaner Mounting	1
180	391694	Tank Assembly – Fuel	1
181	298425	Cap – Fuel Tank	1
188	93585	Screw – Fuel Tank and Starter Mtg.	1
190	**93440**	Screw – Fuel Tank Mtg.	1
201	**261027**	Link – Governor	1
209	**261034**	Spring – Governor (For 2800 to 3000 RPM)	1
284	93572	Screw – Clamp Mtg.	1
307	93490	Screw – Cylinder Shield & Rotating Screen Mounting	1
324	222063	Screen – Rotating	1
331	220865	Washer – Flywheel	1
332	92284	Nut – Flywheel	1
356	298479	Wire – Ground	1
382	93545	Screw – Choke Link Cover	1
390	261015	Spring – Diaphragm	1
392	260455	Spring – Fuel Pump Diaphragm	1
394	391681	Diaphragm – Carburetor	1
396	270571	Gasket – Choke Link Cover	1
397	211678	Cover – Choke Link	1
432	221377	Cap – Spring	1

Ref. No.	Part No.	Description	No. Used
441	222530	Bracket – Oil Fill Tube	1
508	93158	Screw	1
523	391838	Cap With Dipstick – Oil Filler **Note:** For Complete Oil Fill Cap With Dipstick & Oil Filler Tube Assembly – Order Part No. 392055.	1
524	68838	Seal – Filler Tube	1
525	280131	Tube – Oil Filler	1
527	222548	Clamp – Oil Filler Tube	1
529	67838	Grommet – Breather	1
534	93374	Screw – Air Cleaner	1
535	270579	Element Air Cleaner	1
536	390055	Cleaner Assembly – Air	1
611	297219	Pipe – Fuel (Long)	1
612	296811	Pipe – Fuel (Short)	1
617	270344	Seal – Fuel Intake Tube	1
620	299974	Plate – Carburetor Control Uses: 222984 Control Bracket	1
621	297472	Switch – Stop	1
634	270167	Washer – Throttle Shaft (Felt)	1
643	221321	Cup – Air Cleaner	1
655	222057	Anchor – Spring	1
674	93447	Screw – Tank To Bracket	1
681	299060	Needle Valve Kit	1
764	391486	Starter Assembly – Vertical Pull	1
765	299947	Housing – Vertical Pull Starter	1
766	280022	Pulley – Rope (Small)	1
767	231048	Pin – Small Rope Pulley (7/16" Long)	1
768	299948	Pulley & Gear Assembly – Starter	1
769	66734	Rope – Vertical Pull Starter	1
771	299961	Clip – Vertical Pull Starter	1
774	280121	Insert – Starter Handle	1
775	280036	Grip – Starter Rope	1
776	222049	Guide – Rope	1
777	390066	Spring – Vertical Pull Starter	1
778	280021	Cover – Vertical Pull Starter Pulley	1
842	270920	Seal – Oil Filler Cap	1
847	392055	Tube Assembly – Oil Fill	1

BRIGGS & STRATTON ENGINE MODEL NO. 92908-2055-01
BRIGGS & STRATTON ENGINE MODEL NO. 93508-0197-01

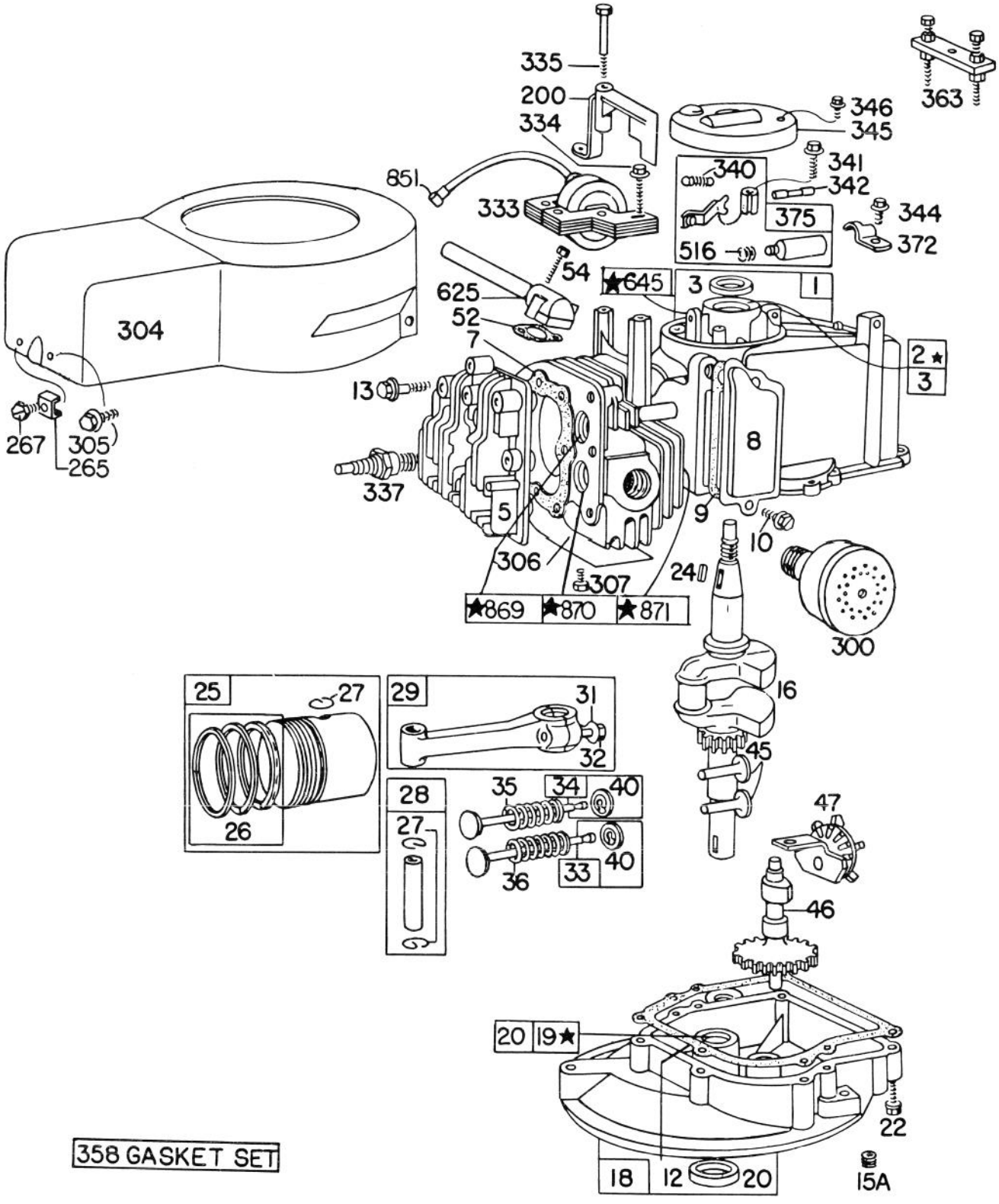

★NOTE-SPECIAL TOOLS REQUIRED FOR INSTALLING
SEE REPAIR INSTRUCTION MANUAL

BRIGGS & STRATTON ENGINE MODEL NO. 92908-2055-01
BRIGGS & STRATTON ENGINE MODEL NO. 93508-0197-01

Ref. No.	Part No.	Description	No. Used
1	298988	Cylinder Assembly	1
2	293708	**Bushing – Cylinder**	
		Note: Requires Special Tools For Installation	1
3	299819	Seal – Oil	1
5	211479	Head – Cylinder	1
7	270341	Gasket – Cylinder Head	1
8	298383	Breather – Valve Chamber	1
9	270239	Gasket – Valve Cover	1
10	93394	Screw – Breather	1
12	*270833	Gasket – Crankcase – .015" Thick (Standard)	1
	*270895	Gasket – Crankcase – .005" Thick	1
	*270896	Gasket – Crankcase – .009" Thick	1
13	93111	Screw – Cylinder Head (1-15/16" Long)	1
15A	93418	Plug – Oil Drain (Socket Head)	1
16	261417	Crankshaft	1
18	390810	Sump – Oil	1
19	293709	Bushing – Oil Sump	
		Note: Requires Special Tools For Installation	1
20	391483	Seal – Oil	1
22	93032	Screw – Sump Mtg.	1
24	61760	Key – Flywheel	1
25	298904	Piston Assy. – Standard	1
	298905	Piston Assy. – .010" O.S.	1
	298906	Piston Assy. – .020" O.S.	1
	298907	Piston Assy. – .030" O.S.	1
		PISTON RING SETS:	
		Note: For Chrome Piston Ring Set - Standard Size - Order Part No. 299742.	1
26	298982	Ring Set – Standard Piston	1
	298983	Ring Set – .010" O.S. Piston	1
	298984	Ring Set – .020" O.S. Piston	1
	298985	Ring Set – .030" O.S. Piston	1
27	26026	Lock – Piston Pin	1
28	298909	Pin Assembly – Piston – Std.	1
	298908	Pin Assembly – Piston – .005" O.S.	1
29	294201	Rod Assembly – Connecting	
		Note: For Connecting Rod W/.020" Undersize Crankpin Bore – Order No. 296079.	1
31	220756	Lock – Conn. Rod Screw	1
32	92296	Screw – Connecting Rod	1
33	296676	Valve – Exhaust	1
34	296677	Valve – Intake	1
35	290552	Spring – Intake Valve	1
36	26478	Spring – Exhaust Valve	1
40	93312	Retainer – Valve Spring	1
45	230173	Tappet – Valve	1

Ref. No.	Part No.	Description	No. Used
46	210453	Gear – Cam	1
47	294652	Oil Slinger Gear & Bracket	1
52	270345	Gasket – Intake Elbow	1
54	93485	Screw – Intake Elbow Mtg.	1
200	68388	Blade – Governor	1
265	22372	Clamp – Casing	1
267	93469	Screw – Clamp Mtg.	1
300	391435	Muffler – Exhaust	1
304	390279	Housing – Blower	1
305	93559	Screw – Blower Housing Mounting	1
306	221805	Shield – Cylinder	1
307	93490	Screw – Cylinder Shield & Rotating Screen Mtg.	1
333	298502	Armature – Magneto	1
334	93381	Screw – Armature Mtg.	1
335	93435	Screw – Armature & Governor Blade Mounting	1
337	293918	Plug – Spark (W/Gasket) (Resistor Type) 1-1/2" High Spark Plugs Use Ignition Cable Terminal No. 221798	1
340	26018	Spring – Breaker Arm	1
341	93381	Screw – Breaker Arm Mounting Sem	1
342	65704	Plunger – Breaker Point	1
344	93042	Screw – Condenser Clamp Mounting Sem	1
345	220366	Cover – Breaker Point & Condenser	1
346	93705	Screw – Dust Cover Mounting	1
358	298989	Gasket Set	1
363	19069	Puller – Flywheel (Optional Accessory)	1
372	220477	Clamp – Condenser	1
375	294628	Breaker Points & Condenser Set	
		Note: 299061 Ignition Kit Includes: 294628 Point Set 65704 Plunger 61760 Key – Flywheel	1
516	260374	Spring – Connector	1
625	298775	Tube – Fuel Intake	1
645	23513	Bushing – Plunger	1
851	221798	Terminal – Ignition Cable	1
869	210879	Seat – Intake Valve (Std.)	
		Note: For Installation & Options See Repair Manual.	1
870	211291	Seat – Exhaust Valve (Std.)	
		Note: For Installation & Options See Repair Manual	1
871	63709	Guide – Exhaust Valve	1

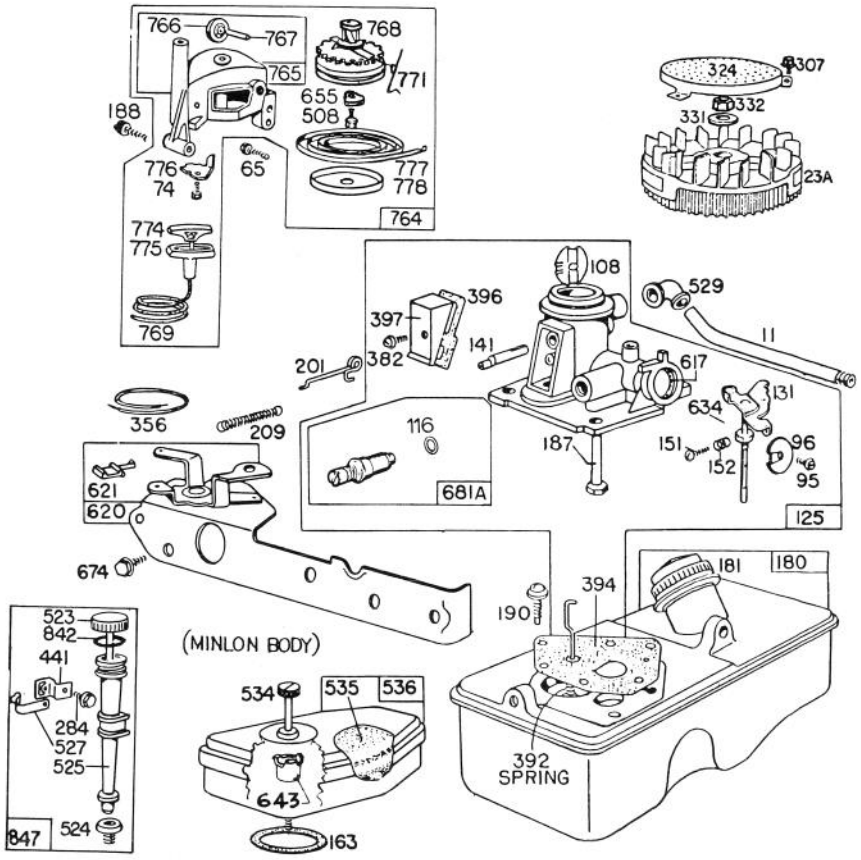

CARBURETOR ASSEMBLY BRIGGS & STRATTON
MODEL NO. 93508-0197-01

Ref. No.	Part No.	Description	No. Used
11	230802	Tube Breather	1
23A	299982	Flywheel – Magneto	1
65	93587	Screw – Vertical Pull Starter Mtg.	1
74	93490	Screw	1
95	93499	Screw – Throttle Valve Mounting	1
96	211203	Valve – Throttle	1
108	280178	Valve – Choke	1
116	280203	Seal, O-Ring	1
125	394591	Carburetor Assembly	1
131	394588	Shaft and Lever – Throttle	1
141	68908	Shaft – Choke	1
151	93524	Screw – Machine Rd. Head	1
152	260746	Spring – Throttle Adjust	1
163	270816	Gasket – Air Cleaner Mounting	1
180	393113	Tank Assembly – Fuel	1
181	298425	Cap – Fuel Tank	1
187	393001	Pipe – Fuel	1
188	93585	Screw – Fuel Tank and Starter Mounting	1
190	93440	Screw – Fuel Tank Mounting	1
201	260878	Link – Governor	1
209	260875	Spring – Governor For 3400 to 3600 RPM Top Speed – Set No Load	1
284	93572	Screw – Clamp Mounting	1
307	93490	Screw – Cylinder Shield and Rotating Screen Mounting	1
324	222063	Screen – Rotating	1
331	220865	Washer – Flywheel	1
332	92284	Nut – Flywheel	1
356	298479	Wire – Ground	1
382	93864	Screw – Choke Link Cover	1
392	261016	Spring – Diaphragm	1
394	299637	Diaphragm – Carburetor	1
396	270571	Gasket – Choke Link Cover	1
397	211678	Cover – Choke Link	1
441	222530	Bracket – Oil Fill Tube	1

Ref. No.	Part No.	Description	No. Used
508	93158	Screw	1
523	391838	Cap with Dipstick – Oil Filler **Note:** For Complete Oil Fill Cap with Dipstick and Oil Filler Tube Assembly – Order Part 392055	1
524	68838	Seal – Filler Tube	1
525	280131	Tube – Oil Filler	1
527	222548	Clamp – Oil Fill Tube	1
529	67838	Grommet – Breather	1
534	93374	Screw – Air Cleaner	1
535	270579	Element – Air Cleaner	1
536	390055	Cleaner Assembly – Air	1
617	270344	Seal – Intake Tube	1
620	299974	Plate – Carburetor Control	1
621	297472	Switch – Stop	1
634	270167	Washer – Throttle Shaft (Felt)	1
643	221321	Cup – Air Cleaner	1
655	222057	Anchor – Spring	1
674	93158	Screw – Tank to Bracket	1
681A	393451	Needle Valve Kit	1
764	391486	Vertical Pull Starter Assembly	1
765	299947	Housing – Vertical Pull Starter	1
766	280022	Pulley – Rope (Small)	1
767	231048	Pin – Small Rope Pulley (7/16" Long)	1
768	299948	Pulley and Gear Assy. – Starter	1
769	66734	Rope – Vertical Pull Starter	1
771	299961	Clip – Vertical Pull Starter	1
774	280121	Insert – Starter Handle	1
775	280036	Grip – Starter Rope	1
776	222049	Guide – Rope	1
777	390066	Spring – Vertical Pull Starter Pulley	1
778	280021	Cover – Vertical Pull Starter Pulley	1
842	270920	Seal – Oil Filler Cap	1
847	392055	Tube Assembly – Oil Fill	1

The Toro Promise

A ONE YEAR LIMITED WARRANTY

The Toro Company promises to repair your TORO Product if defective in materials or workmanship. The following time periods from the date of purchase apply:

Residential Product	1 Year
Residential Products Used Commercially . . .	45 Days

The costs of parts and labor are included, but the customer pays the transportation costs. Just return any residential product to an Authorized TORO Service Dealer or TORO Distributor.

Should you feel your TORO Product is defective and wish to rely on The Toro Promise, the following procedure is recommended:

1. Contact any Authorized TORO Service Dealer, TORO Master Service Dealer, or TORO Distributor (the Yellow Pages of your telephone directory is a good reference source).
2. He will either instruct you to return the product to him or recommend another Authorized TORO Service outlet which might be more convenient.
3. Bring the product along with your original sales slip, or other evidence of purchase date, to the service dealer.
4. The servicing dealer will inspect the unit, advise you whether the product is defective and, if so, make all repairs necessary to correct the defect without extra charge to you.

If for any reason you are dissatisfied with the dealer's analysis of the defect or the service performed, you may contact us.

Write:

TORO Consumer Service Department
8111 Lyndale Avenue South
Minneapolis, Minnesota 55420

The above remedy of product defects through repair by an Authorized TORO Service Dealer is the purchaser's sole remedy for any defect.

THERE IS NO OTHER EXPRESS WARRANTY. ALL IMPLIED WARRANTIES OF MERCHANTABILITY AND FITNESS FOR USE ARE LIMITED TO THE DURATION OF THE EXPRESS WARRANTY.

Some states do not allow limitations on how long an implied warranty lasts, so the above limitation may not apply to you.

This warranty applies only to parts or components which are defective and does not cover repairs necessary due to normal wear, misuse, accidents, or lack of proper maintenance. Regular, routine maintenance of the unit to keep it in proper operating condition is the responsibility of the owner.

All warranty repairs reimbursable under The Toro Promise must be performed by an Authorized TORO Service Dealer using Toro approved replacement parts.

Repairs or attempted repairs by anyone other than an Authorized TORO Service Account are not reimbursable under The Toro Promise. In addition, these unauthorized repair attempts may result in additional malfunctions, the correction of which is not covered by warranty.

THE TORO COMPANY IS NOT LIABLE FOR INDIRECT, INCIDENTAL OR CONSEQUENTIAL DAMAGES IN CONNECTION WITH THE USE OF THE PRODUCT INCLUDING ANY COST OR EXPENSE OF PROVIDING SUBSTITUTE EQUIPMENT OR SERVICE DURING PERIODS OF MALFUNCTION OR NON-USE.

Some states do not allow the exclusion or limitation of incidental or consequential damages, so the above limitation or exclusion may not apply to you.

This warranty gives you specific legal rights, and you may also have other rights which vary from state to state.

COUNTRIES OTHER THAN THE UNITED STATES OR CANADA

Customers who have purchased TORO products exported from the United States or Canada should contact their TORO Distributor (Dealer) to obtain guarantee policies for your country, province or state. If for any reason you are dissatisfied with your Distributor's service or have difficulty obtaining guarantee information, contact the TORO importer. If all other remedies fail, you may contact us at The Toro Company.

Compliance with Radio Interference Regulations Certified.
Certifie Conforme au Reglement sur le Brouillage Radioelectrique.

PRODUCT CHANGES

In an effort to make improvements available to TORO owners as quickly as possible, minor changes are incorporated into Toro's products from time to time that do not become immediately shown in the Parts Catalog. If such a change apparently has been made in your unit, which is not reflected in your manual, see your TORO Distributor or his Authorized TORO Service Dealer for information and part numbers.

IDENTIFICATION AND ORDERING

Model and Serial Numbers

The Mower has two identification numbers: a model number and a serial number. The two numbers are stamped on a decal which is located on the mower housing between the rear wheels. In any correspondence concerning the mower, supply model and serial numbers to assure that correct information and replacement parts are obtained.

To order replacement parts from an Authorized TORO Service Dealer, supply the following information:

1. Model and serial numbers of the mower.

2. Part number, description, and quantity of part(s) desired.

Note: Do not order by reference number if a parts catalog is being used; use the PART NUMBER.

Keep Your TORO All Toro Genuine TORO PARTS & ACCESSORIES ***Insist on Genuine Toro Parts***

MAINTENANCE RECORD

Date	Hours Used	Oil Change	Air Cleaner Service	Lubrication	Winter Storage	Spring Service	Spark Plug Gap

MAINTENANCE RECORD

Date	Hours Used	Oil Change	Air Cleaner Service	Lubrication	Winter Storage	Spring Service	Spark Plug Gap

MAINTENANCE RECORD

Date	Hours Used	Oil Change	Air Cleaner Service	Lubrication	Winter Storage	Spring Service	Spark Plug Gap

Litho in U.S.A.