Form No. 3435-861 Rev D

TORO®

Count on it.

Parts Catalog

Z Master® Professional 6000 Series Riding Mower

with 60in TURBO FORCE® Side Discharge Mower

Model No. 72946—Serial No. 406343021 and Up

Register at www.Toro.com.
Original Instructions (EN)

3435-861 D

Ordering Replacement Parts

To order replacement parts, please supply the part number, the quantity, and the description of each part desired.

Understanding Reference Numbers

Each identified part in an illustration has a reference number. The reference number for a part also appears in the parts list, along with other information about the part.

This catalog uses two special reference number formats, one to indicate parts in a service assembly and another to indicate the quantity of a given part in an illustration.

Service Assembly Reference Numbers

Parts in service assemblies have reference numbers in the form a:b. The a represents the reference number of the entire service assembly and the b represents a sequential number unique to each part within the service assembly.

For example, a wheel assembly might be identified by reference number 6, the tire by 6:1, the valve by 6:2, and the wheel by 6:3. When you order the assembly identified by reference number 6, you receive all parts identified by reference numbers 6:1,6:2, and 6:3. However, you may also order any part individually. Reference numbers of this type appear in illustration and in parts lists.

Reference Numbers Indicating Quantity

In an illustration, if a reference number indicates more than one part, the reference number has the form nX y. The n represents the quantity of the part, the X is the multiplication symbol, and the y represents the reference number.

For example, in an illustration, the reference number 2X 37 means that two of the parts identified by reference number 37 are indicated.

Contents

Frame Assembly . . . 4
Roll-Over Protection System Assembly No. 116-0231 . . . 6
Caster Fork and Wheel Assembly . . . 8
Hydraulic Drive Assembly . . . 10
Pump Idler Assembly No. 116-1255 . . . 12
LH Hydro Assembly No. 135-7907 . . . 14
RH Hydro Assembly No. 135-7908 . . . 16
Rear Wheel Assembly . . . 18
Park Brake Assembly . . . 20
Fuel Tank Assembly . . . 22
Fuel Tank Assembly 135-0643 . . . 24
Seat Mounting Assembly . . . 26
Seat Assembly No. 140-8003 . . . 28
Motion Control Assembly . . . 30
Fender, Console and Control Assembly . . . 32
RH Console Assembly No. 115-7400 . . . 34
LH Console Assembly No. 115-7401 . . . 36
Electrical Assembly . . . 38
Wire Harness Assembly No. 135-7894 . . . 40
Deck Lift Assembly . . . 42
Height-of-Cut Assembly No. 109-7438 . . . 44
Engine Assembly . . . 46
Deck Assembly . . . 48
Deck Decal Assembly No. 140-1169 . . . 50
Rubber Deflector Assembly No. 108-2792 . . . 52
Idler Arm Assembly . . . 54
Frame Decal Assembly . . . 56
Attachments and Accessories . . . 58

© 2023—The Toro® Company
8111 Lyndale Avenue South
Bloomington, MN 55420

Contact us at www.Toro.com.
Printed in the USA.
All Rights Reserved

Frame Assembly

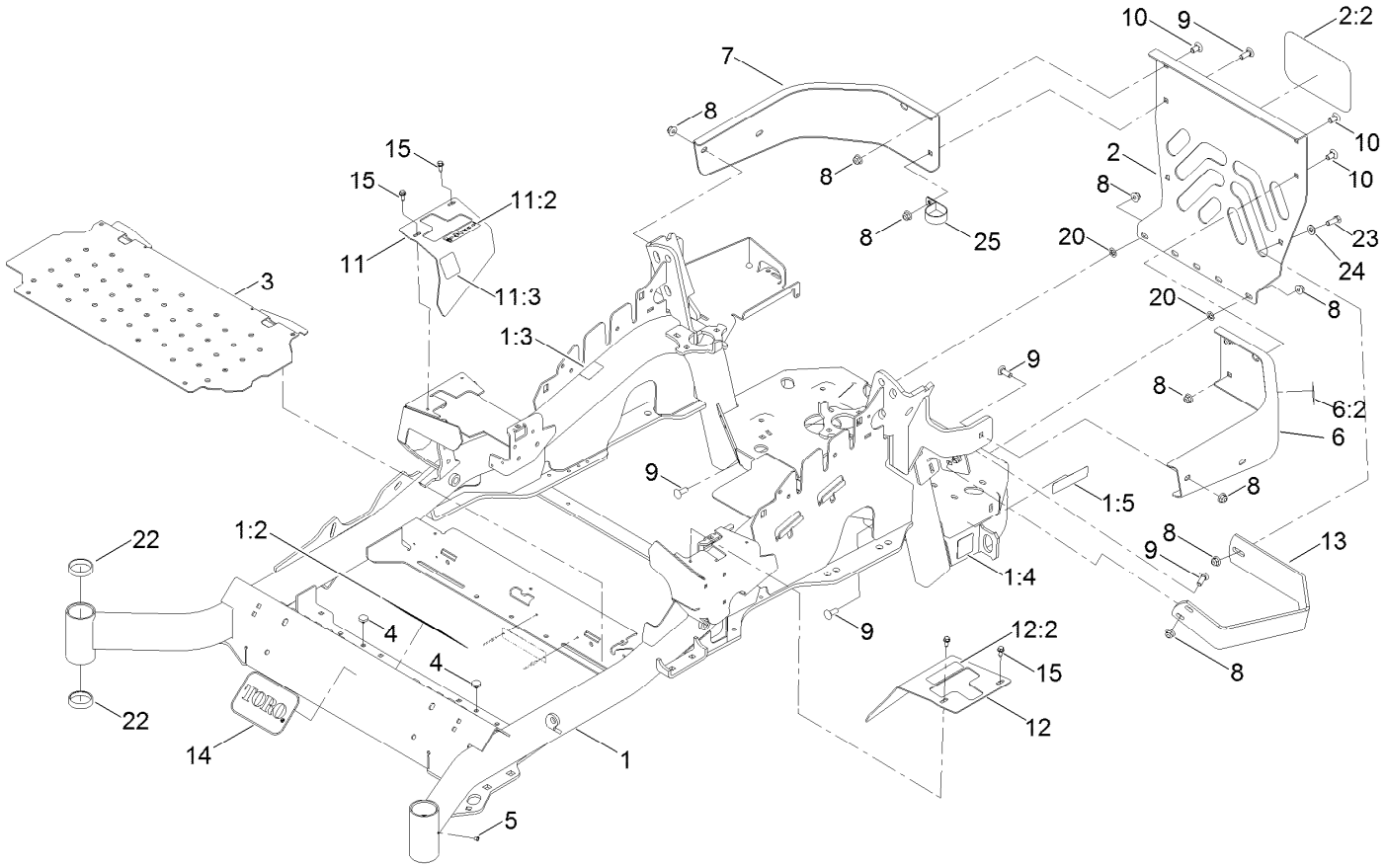

Frame Assembly (continued)

Ref.	Part Number	Qty.	Description
1	116-5902	1	Mainframe ASM
1:2	132-0871	1	Decal-Danger
1:3	106-5517	2	Decal-Warning
1:4	106-2655	2	Decal-Hazard, Pinched Finger
1:5	133-8062	1	Decal-Arrestor, Spark
2	115-7410	1	Rear Guard ASM
2:2	67-7320	1	Decal
3	116-8898-01	1	Floorpan
4	1-513658	2	Bumper
5	1-811010	2	Plug
6	116-0180	1	LH Bumper ASM
6:2	106-5517	1	Decal-Warning
7	116-0057-03	1	Bumper-RH
8	104-8301	11	Nut-HF, NI
9	3231-22	7	Screw-CARR
10	3231-21	3	Screw-CARR
11	116-5899	1	RH Motion Control Cover ASM
11:2	99-8936	1	Decal-Control, Motion
11:3	116-5988	1	Decal-Park Brake, CE
12	116-0580	1	LH Motion Control Cover ASM
12:2	99-8936	1	Decal-Control, Motion
13	126-2067-03	1	Guard-Muffler
14	68-3640	1	Decal
15	32144-10	4	Screw-HWH
20	107-3154	2	Nut-Push
22	1-543508	4	Cup-Bearing
23	323-6	1	Screw-HH
24	3256-24	1	Washer-Plain
25	2412-147	1	Clamp-R

Roll-Over Protection System Assembly No. 116-0231

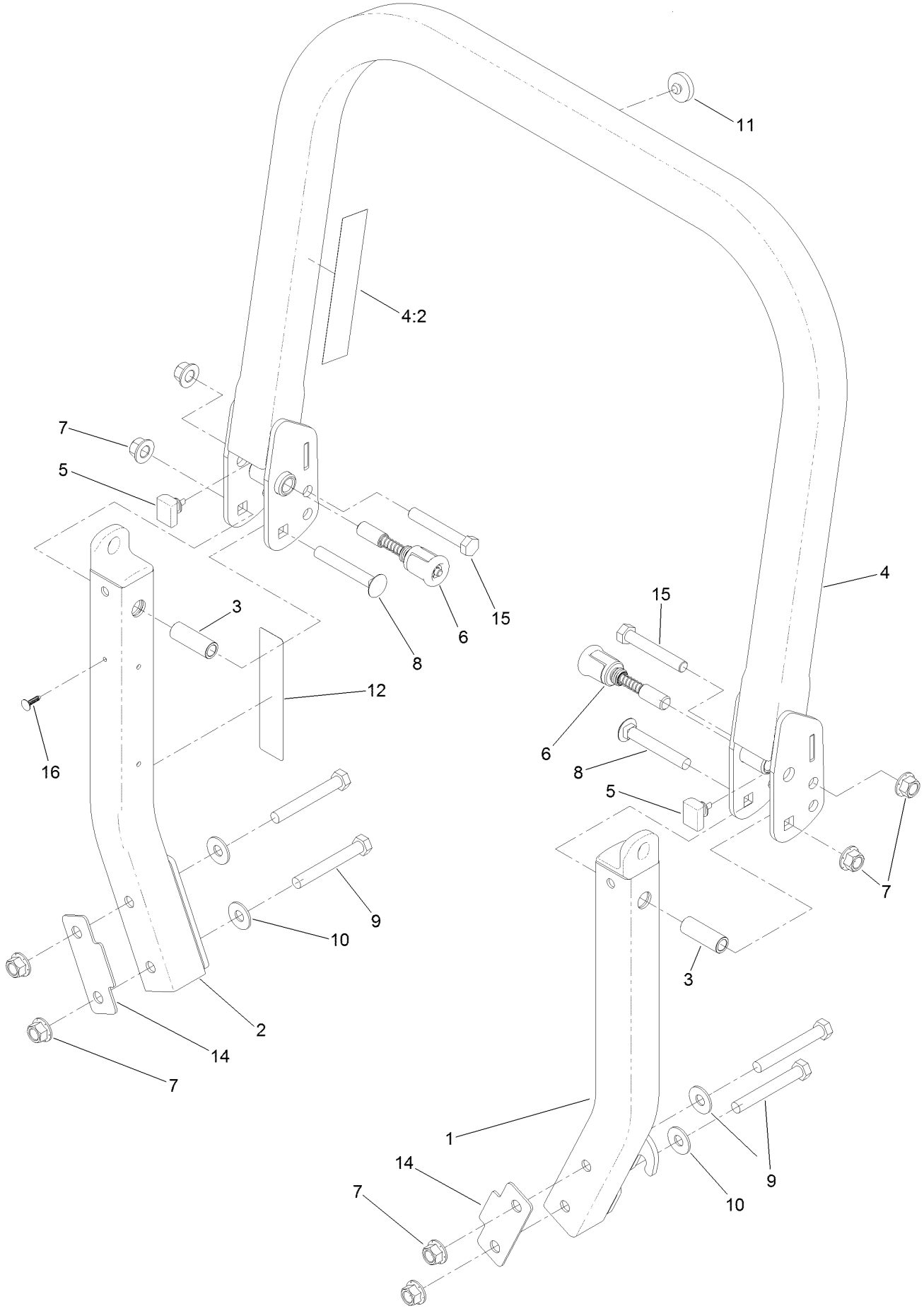

Roll-Over Protection System Assembly No. 116-0231 (continued)

Ref.	Part Number	Qty.	Description
1		1	Leg-ROPS, LH ●
2		1	Leg-ROPS, RH ●
3	109-6653	2	Spacer
4		1	Upper ROPS ASM ●
4:2	107-3069	1	Decal-Warning
5	109-5337	2	Bumper-ROPS
6	116-0104	2	Pin-Spring
7	99-5107	8	Nut-Lock
8	3233-10	2	Screw-CARR
9	325-35	4	Screw-HH
10	109-9505	4	Washer-Spring
11	109-9233	1	Bumper-Push-In, Rubber
12	117-0346	1	Decal-Caution, Fuel Vent
14	116-0960	2	Spacer
15	325-13	2	Screw-HH
16	125-8067	1	Plug-Plastic

● Not serviced separately

Caster Fork and Wheel Assembly

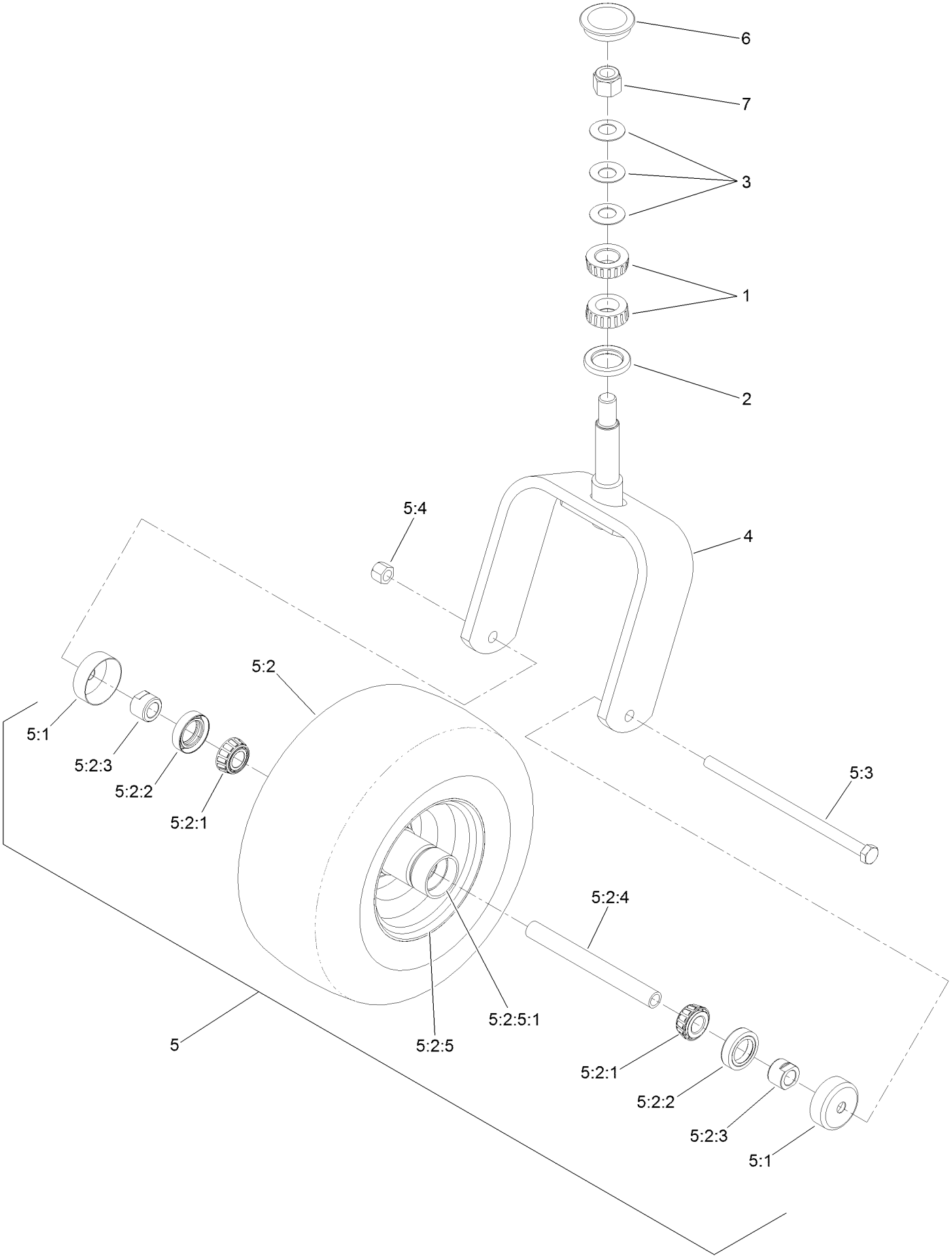

Caster Fork and Wheel Assembly (continued)

Ref.	Part Number	Qty.	Description
1	1-543509	2	Bearing-Roller, Tapered
2	116-5647	1	Seal-Grease
3	1-633508	3	Washer-Bellville
4	116-6707-01	1	Caster
5	127-9528	1	Wheel And Axle ASM
5:1	103-2768	2	Guard-Seal
5:2		1	Wheel And Bearing ASM ●
5:2:1	1-633585	2	Bearing-Cone, Taper
5:2:2	103-0063	2	Seal-Caster
5:2:3	103-3051	1	Spacer-Nut ■
5:2:4	126-5361	1	Axle Caster ASM
5:2:5		1	Wheel And Tire ASM ●
5:2:5:1	1-633584	2	Bearing-Cup
5:3	325-39	1	Screw-HH
5:4	3296-23	1	Nut-Lock, NI
6	103-4882	1	Cap-Grease
7	3296-51	1	Nut-Lock, NI

● Not serviced separately
■ Use Pro-Lock, Nut Type (P/N 1-840022, .5ml tube) on threads.

Hydraulic Drive Assembly

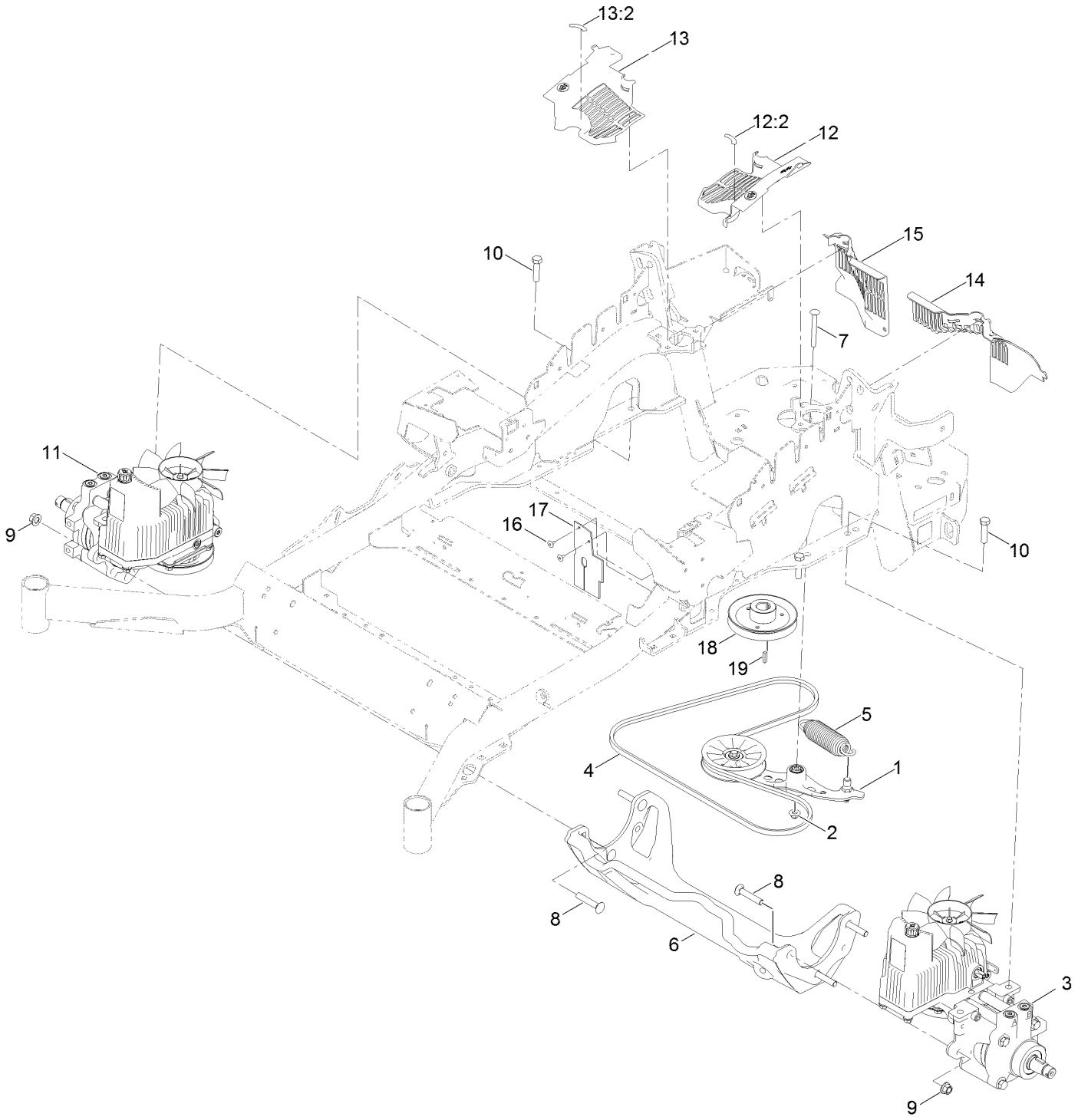

Hydraulic Drive Assembly (continued)

Ref.	Part Number	Qty.	Description
1	116-1255	1	Pump Idler ASM
2	109-6658	1	Nut-Flange, NI
3	135-7907	1	Hydro-LH
4	126-9835	1	Belt-V
5	116-6317	1	Spring-Extension
6	116-7558	1	Cradle-Hydro
7	116-1502	1	Bolt-Shoulder, Carriage
8	126-0095	6	Screw-CARR
9	99-5107	6	Nut-Lock
10	325-8	4	Screw-HH
11	135-7908	1	Hydro-RH
12	116-0170	1	LH Hydro Guard ASM
12:2	116-8726	1	Decal-Oil, Hydro

Ref.	Part Number	Qty.	Description
13	116-0171	1	RH Hydro Guard ASM
13:2	116-8726	1	Decal-Oil, Hydro
14	109-9709	1	Guard-Hydro, Rear Trim (LH)
15	109-9058	1	Guard-Hydro, Rear (RH)
16	1-803035	2	Rivet-Pop
17	116-2362	1	Deflector-Air Flow
18	109-9905	1	Sheave
19	1-807259	1	Key
99	114-4713	1	Hypr-Oil 500 (Quart) ●
99	114-4714	1	Hypr-Oil 500 (Gallon) ●
99	114-4715	1	Hypr-Oil 500-5 (5 Gallon) ●
99	117-0390	1	Filter-Hydro ●

● Not illustrated

Pump Idler Assembly No. 116-1255

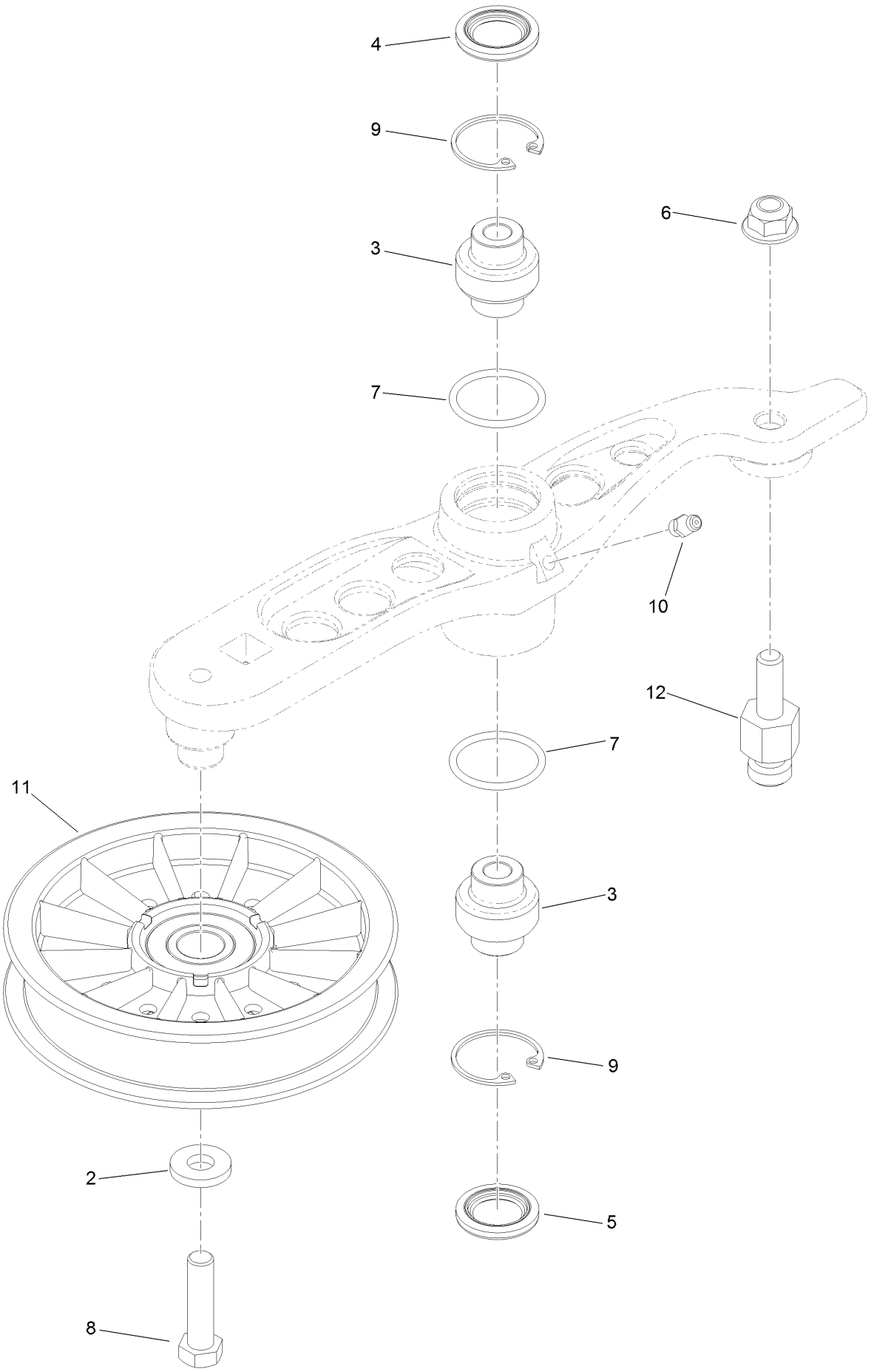

Pump Idler Assembly No. 116-1255 (continued)

Ref.	Part Number	Qty.	Description
2	43-0940	1	Spacer
3	103-3504	2	Bearing-Spherical
4	103-3505	1	Seal-Lip, Double
5	103-3506	1	Seal-Lip, Single
6	109-6658	1	Nut-Flange, NI
7	106-7159	2	O-Ring
8	323-8	1	Screw-HH
9	32120-10	2	Ring-Snap
10	302-19	1	Fitting-Grease
11	109-8076	1	Pulley-Idler
12	132-4724	1	Pin-Anchor, Spring

LH Hydro Assembly No. 135-7907

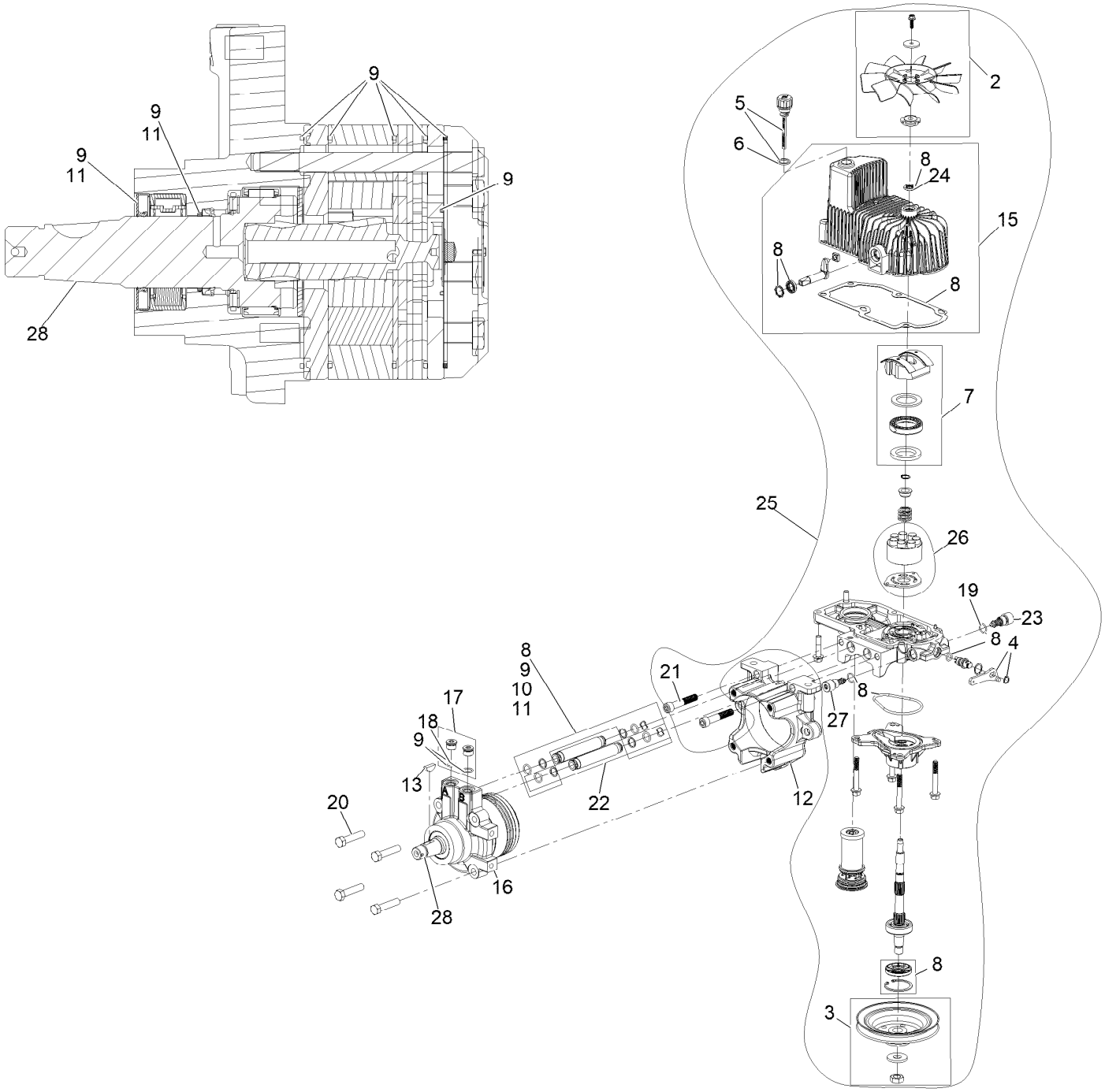

LH Hydro Assembly No. 135-7907 (continued)

Ref.	Part Number	Qty.	Description
2	142-3603	1	Kit, 7.8 In Fan
3	116-0234	1	Pulley Kit
4	116-0235	1	Handle
5	116-0236	1	Dipstick
6	116-0237	1	Gasket
7	116-1367	1	Swash Block Kit
8	142-3604	1	Kit, Pump Seal
9	116-1369	1	Motor Seal Kit
10	116-1370	1	Tube Seal Kit
11	116-1371	1	Output Shaft Seal Kit
12	116-5469	1	Cup-Nose
13	3257-42	1	Key-Woodruff 5/16 X 1
15	142-4460	1	Kit, Housing-Hydro LH
16	146-1948	1	HYD Motor,280Cc LH Sealed
17	116-7901	1	Magnetic Plugs Service Kit
18	76-1900	2	O-Ring
19	116-8662	2	O-Ring-Valve, Check
20	116-8974	4	Screw-HH 1/2-20 X 2 1/4
21	116-8975	2	Screw-HSH 1/2-20 X 2 3/4
22	116-9922	2	Hydraulic Tube Kit
23	126-7467	1	Shock Valve, 16Cc Hydro
24	126-7711	1	Seal-Drive, Fan
25	142-3607	1	Kit, Pump Section 16Cc LH
26	142-4501	1	Kit - 16Cc Port Plate,Rotate Grp
27	142-4458	1	Shock Valve Orificed 3300
28	146-3749	1	Output Shaft- Tl Uht Motor
99	116-1373	1	Flow Test Kit ●

● Not illustrated

RH Hydro Assembly No. 135-7908

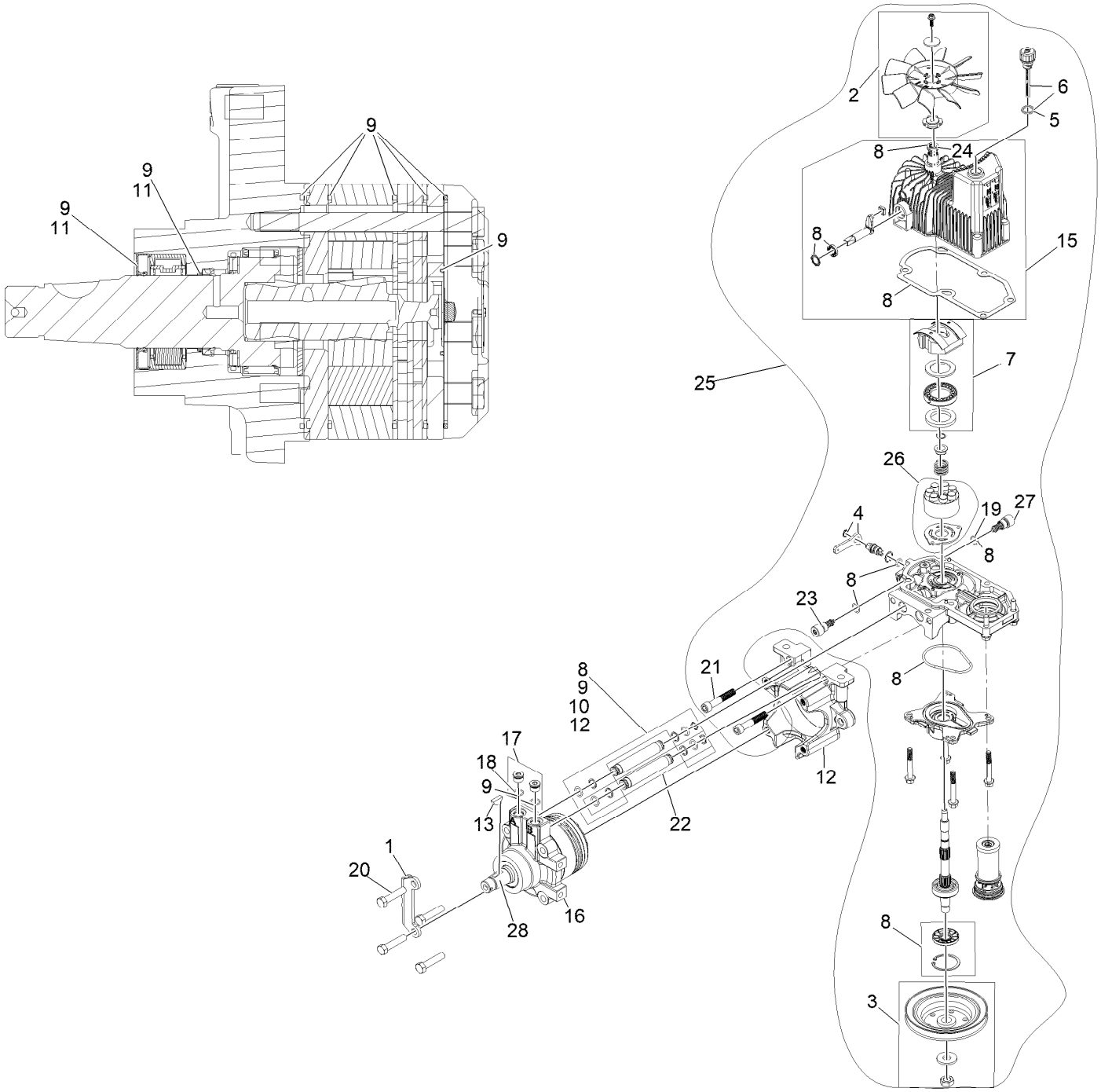

RH Hydro Assembly No. 135-7908 (continued)

Ref.	Part Number	Qty.	Description
1	135-7827	1	Plate, Horse Shoe Mount
2	142-3603	1	Kit, 7.8 In Fan
3	116-0234	1	Pulley Kit
4	116-0235	1	Handle
5	116-0237	1	Gasket
6	116-0236	1	Dipstick
7	116-1367	1	Swash Block Kit
8	142-3604	1	Kit, Pump Seal
9	116-1369	1	Motor Seal Kit
10	116-1370	1	Tube Seal Kit
11	116-1371	1	Output Shaft Seal Kit
12	116-5469	1	Cup-Nose
13	3257-42	1	Key-Woodruff 5/16 X 1
15	142-4461	1	Kit, Housing-Hydro RH
16	146-1947	1	HYD Motor,280Cc RH Sealed
17	116-7901	1	Magnetic Plugs Service Kit
18	76-1900	2	O-Ring
19	116-8662	2	O-Ring-Valve, Check
20	116-8974	4	Screw-HH 1/2-20 X 2 1/4
21	116-8975	2	Screw-HSH 1/2-20 X 2 3/4
22	116-9922	2	Hydraulic Tube Kit
23	126-7467	1	Shock Valve, 16Cc Hydro
24	126-7711	1	Seal-Drive, Fan
25	142-3606	1	Kit, Pump Section 16Cc RH
26	142-4501	1	Kit - 16Cc Port Plate,Rotate Grp
27	142-4458	1	Shock Valve Orificed 3300
28	146-3749	1	Output Shaft- Tl Uht Motor
99	116-1373	1	Flow Test Kit ●
99	116-4245	1	Puller-Pulley

● Not illustrated

Rear Wheel Assembly

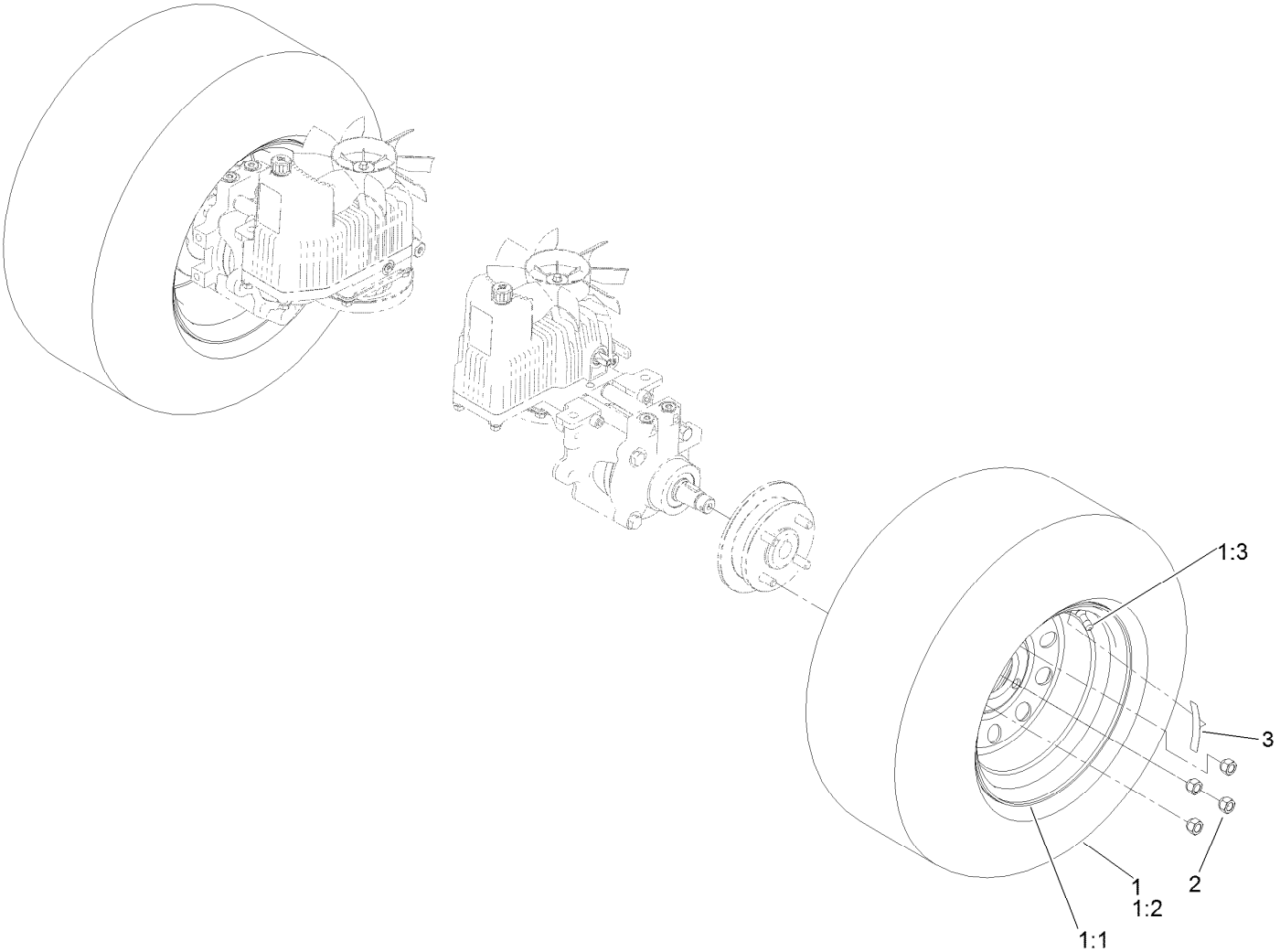

Rear Wheel Assembly (continued)

Ref.	Part Number	Qty.	Description
1	127-9520	2	Wheel And Tire ASM
1:1	127-9517	1	Wheel
1:2	1-633993	1	Tire
1:3	232-27	1	Stem-Valve

Ref.	Part Number	Qty.	Description
2	242-50	8	Nut-Lug
3	126-2055	2	Decal-Torque, Wheel Hub Lug

Park Brake Assembly

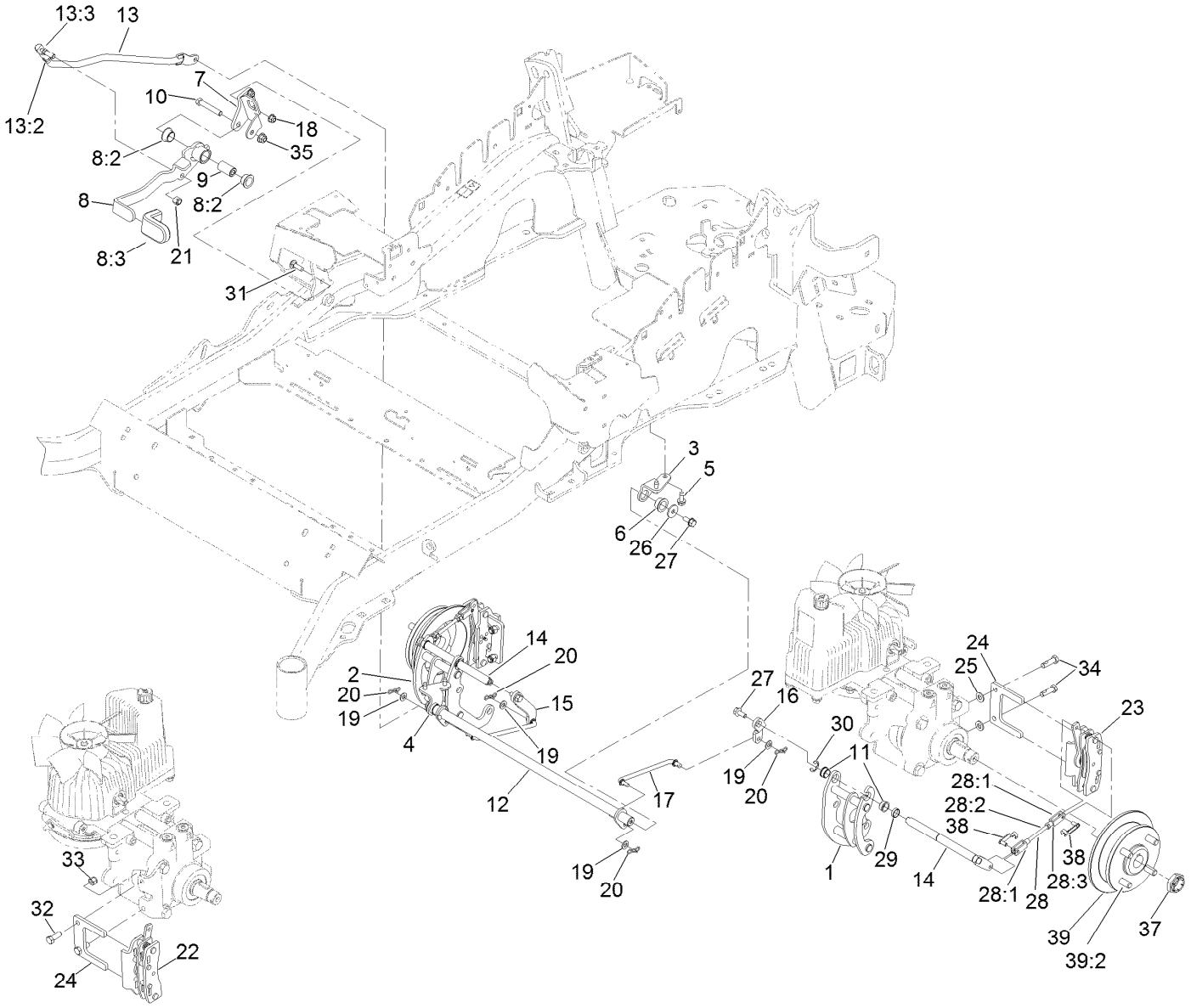

Park Brake Assembly (continued)

Ref.	Part Number	Qty.	Description
1	126-4248	1	Mount-Bellcrank, LH
2	126-4249	1	Mount-Bellcrank, RH
3	116-9681	1	Mount-Pivot, LH
4	116-9682	1	Mount-Pivot, RH
5	32144-70	4	Screw-HWHTF
6	109-8054	2	Bushing-Flange
7	116-9096-01	1	Bracket-Mount
8	135-7565	1	Brake Lever ASM
8:2	109-8054	2	Bushing-Flange
8:3	132-4749	1	Grip-Lever
9	116-9117	1	Pivot-Handle, Brake
10	323-11	1	Screw-HH
11	126-6199	4	Bushing
12	135-7800	1	Shaft-Cross
13	135-7805	1	ASM, Front Linkage
13:2	94-7572	1	End-Tie Rod, RH
13:3	3220-3	1	Nut-HJ
14	126-4251	2	Bellcrank
15	126-3716	1	Arm-Inner, RH
16	126-3715	1	Arm-Inner, LH
17	135-7583	2	Link-Mid
18	104-8300	2	Nut-HF, NI
19	3256-23	4	Washer-Plain
20	119-1415	4	Pin-Cotter, Locking
21	3296-6	1	Nut-Lock
22	135-7440	1	Caliper-Brake, RH
23	135-7441	1	Caliper-Brake, LH
24	135-7828	2	Plate-Mount, Brake
25	3256-24	6	Washer-Plain
26	115-7109	2	Washer-Flat
27	98-9940	4	Screw-HHF
28	126-7587	2	Rear Linkage ASM
28:1	126-7588	2	Yoke
28:2	116-9069	1	Linkage, Rear
28:3	3220-1	1	Nut-Jam
29	126-6200	2	Spacer
30	32120-19	2	E-Ring
31	3230-2	2	Bolt-CARR
32	135-7915	2	Screw-HH,
33	112-0236	2	Nut-Lock
34	135-7890	2	Screw-HH, Patch,
35	104-8301	1	Nut-HF, NI
37	116-1399	2	Locknut
38	126-6395	4	Pin-Clevis, Spring
39	142-2701	2	Wheel Hub ASM
39:2	116-1696	4	Stud-Wheel

Fuel Tank Assembly

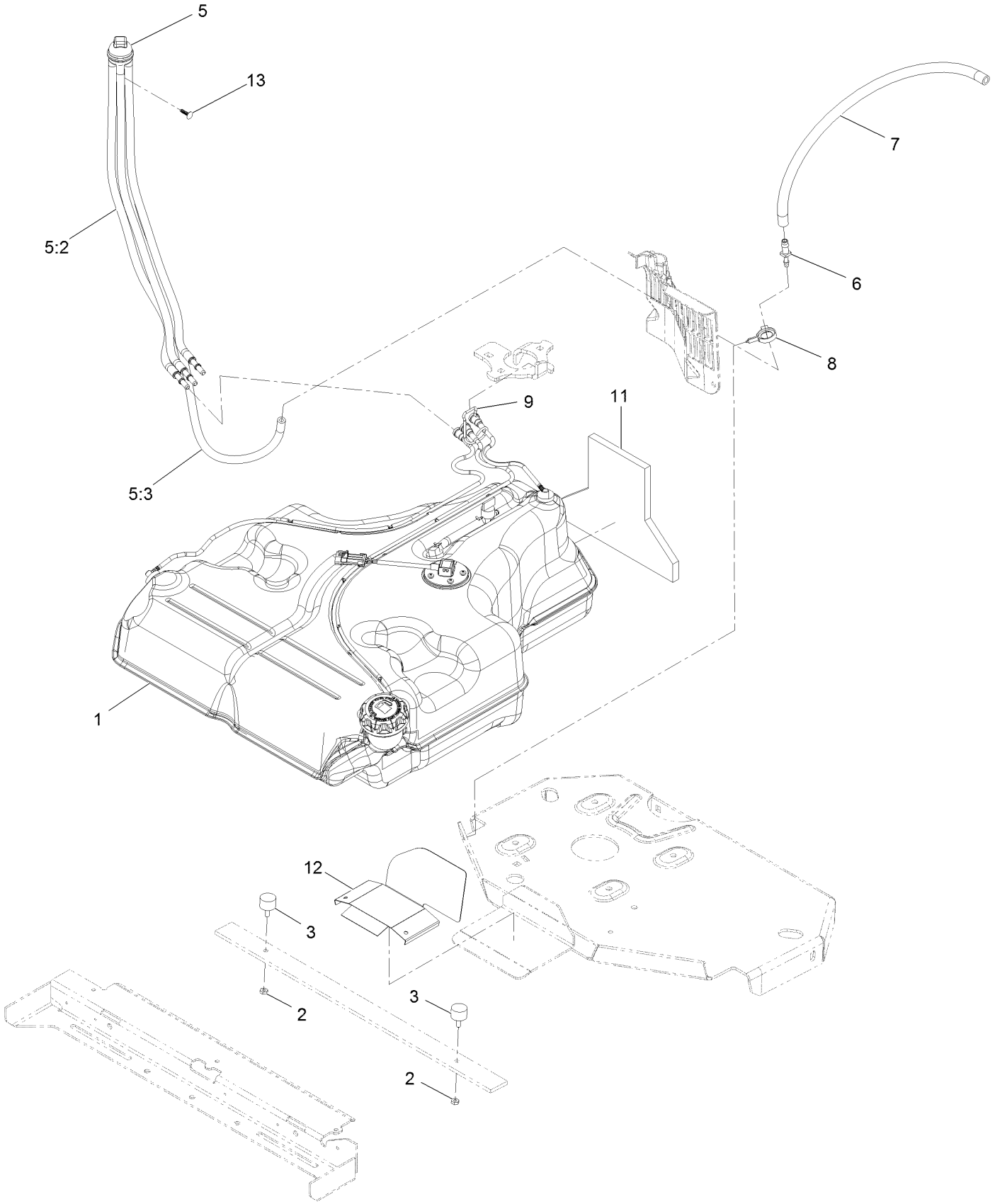

Fuel Tank Assembly (continued)

Ref.	Part Number	Qty.	Description
1	135-0643	1	Fuel Tank ASM
2	3218-1	2	Nut-Jam 1/4-20
3	1-523420	2	Bumper
5	127-0583	1	Fuel Manifold Vent ASM
5:2	109-0302	3	Hose-Fuel Line 24"
5:3	108-5376	1	Hose-Fuel
6	116-5072	1	Fitting-Straight
7	116-5087	1	Hose-Fuel
8	105-1853	1	Clamp-Hose
9	116-6005	1	Retainer-Line, Vapor
11	126-0224	1	Insulation-Foam, Fuel Tank
12	126-0032-01	1	Guard-Exhaust
13	125-8067	1	Plug-Plastic

Fuel Tank Assembly 135-0643

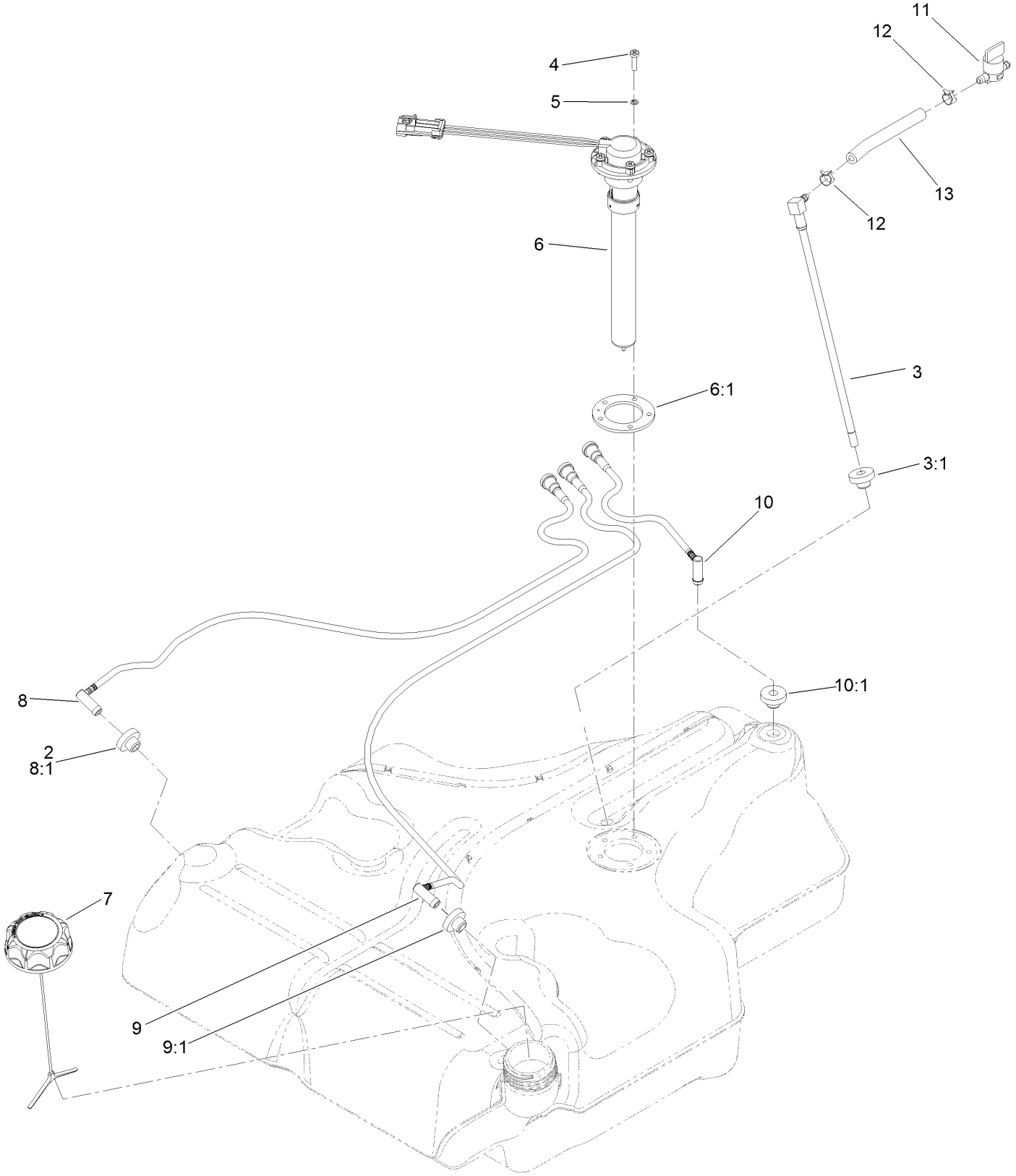

Fuel Tank Assembly 135-0643 (continued)

Ref.	Part Number	Qty.	Description
2	46-6560	4	Bushing
3	116-2459	1	Fuel Line Kit (With Grommet)
3:1	46-6560	1	Bushing
4	3290-500	5	Screw-PPH
5	3253-17	5	Washer-Lock
6	126-3913	1	Float-Sender, Fuel
6:1	126-3950	1	Gasket-Sender
7	126-1789	1	Cap-Fuel, Ratcheting
8	116-2460	1	RH Vent Line Kit (With Grommet)
8:1	46-6560	1	Bushing
9	116-2461	1	LH Vent Line Kit (With Grommet)
9:1	46-6560	1	Bushing
10	116-2462	1	Rear Vent Line Kit (With Grommet)
10:1	46-6560	1	Bushing
11	1-603770	1	Valve-Fuel
12	2412-98	2	Clamp-Hose
13	109-0650	1	Hose-Fuel

Seat Mounting Assembly

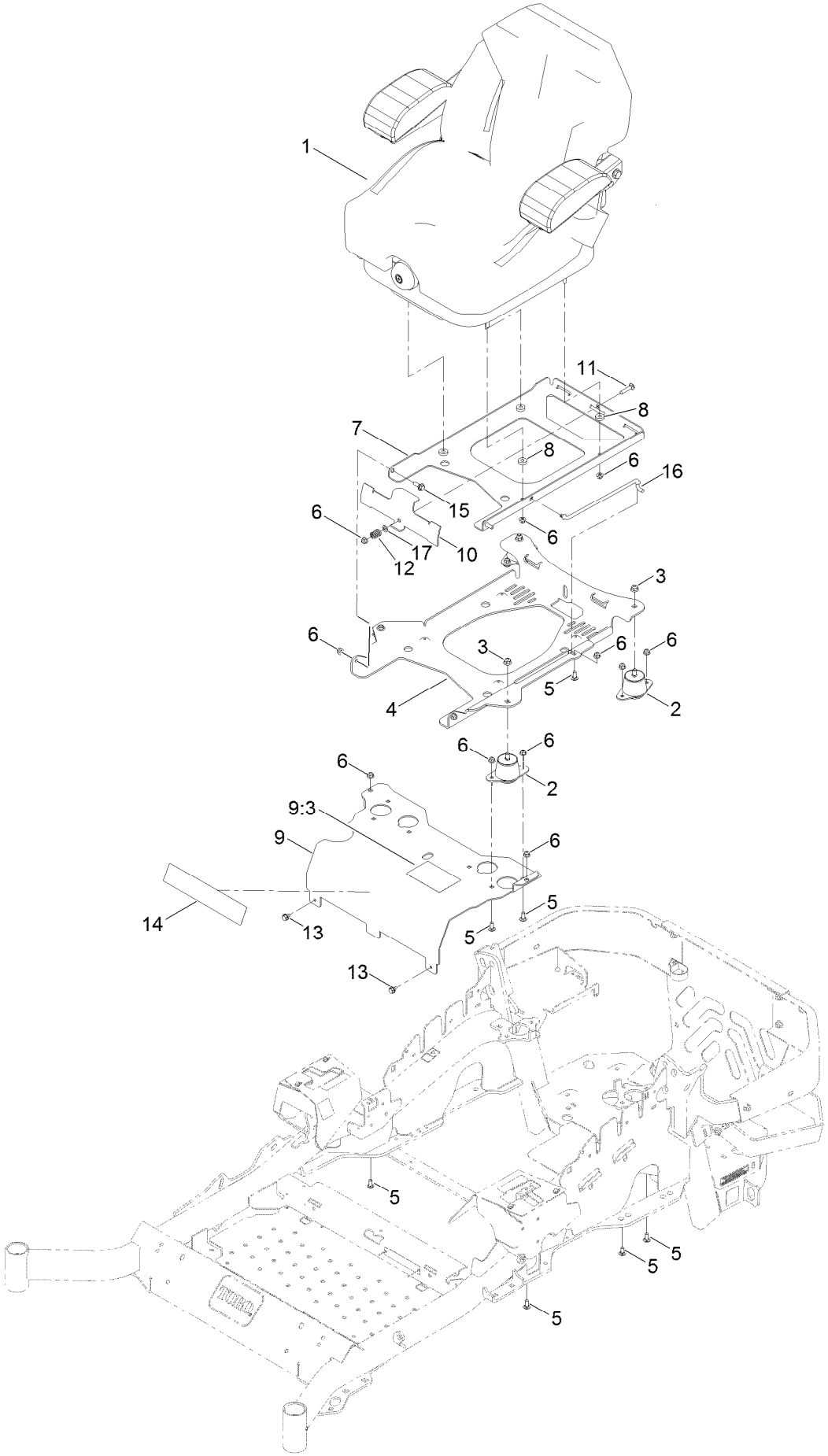

Seat Mounting Assembly (continued)

Ref.	Part Number	Qty.	Description
1	140-8003	1	Seat-Suspension
2	109-9034	4	Isolator-Seat
3	104-8301	4	Nut-HF, NI
4	116-3860-03	1	Plate-Tilt, Seat Support
5	3230-23	11	Bolt-CARR
6	104-8300	18	Nut-HF, NI
7	116-3859-03	1	Plate-Frame, Seat
8	26-4840	4	Spacer-Pin, Mounting
9	125-9385	1	Seat Mount ASM

Ref.	Part Number	Qty.	Description
9:3	125-9383	1	Decal-Service Aid
10	109-9881-03	1	Plate-Latch, Seat
11	3230-4	1	Bolt-CARR
12	107-3017	1	Spring-Compression
13	9266934	2	Screw
14	140-1215	1	Decal-Console
15	116-1297	2	Screw-Shoulder
16	116-0070	1	Rod-Prop
17	3256-23	1	Washer-Plain

Seat Assembly No. 140-8003

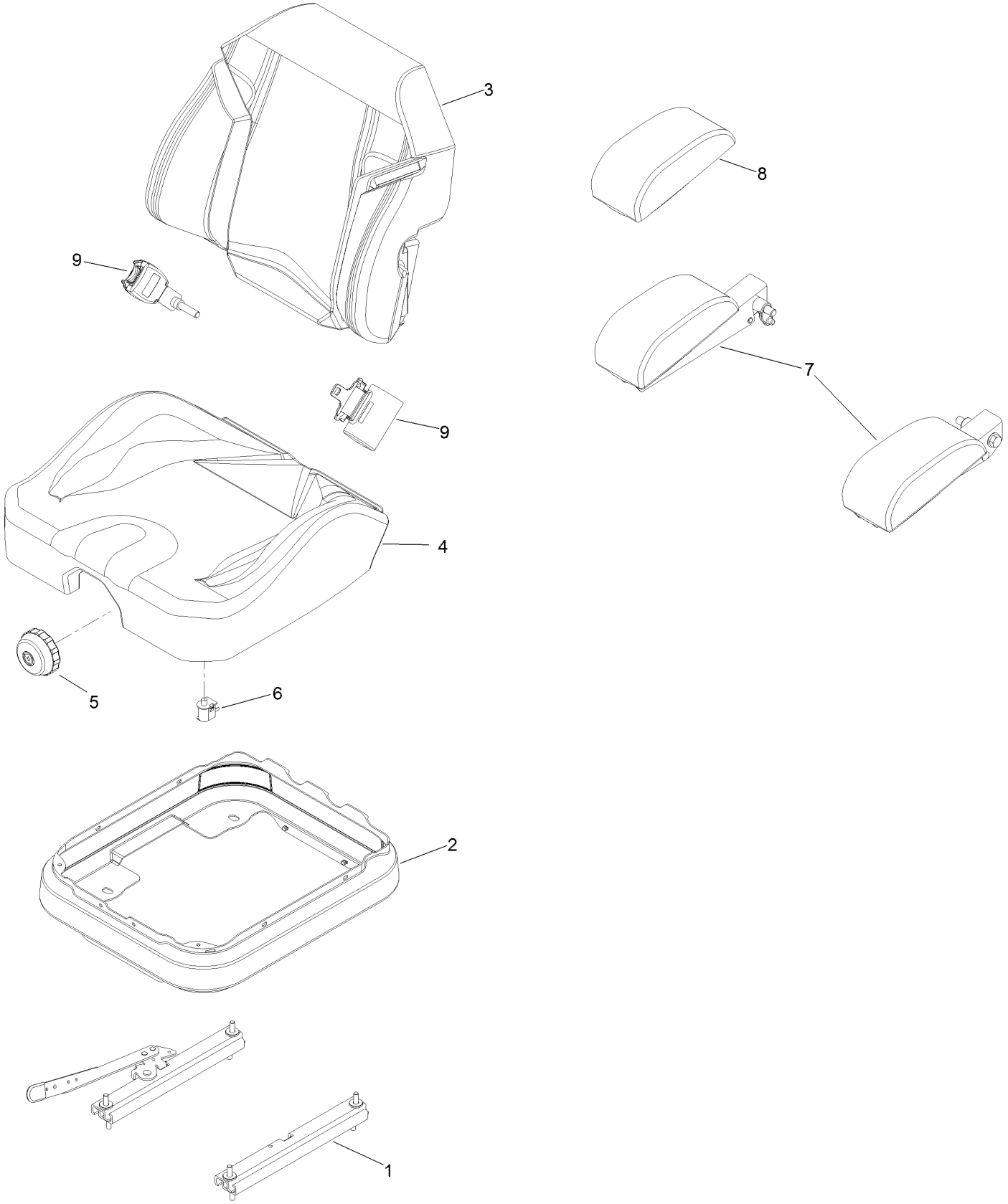

Seat Assembly No. 140-8003 (continued)

Ref.	Part Number	Qty.	Description
1	140-8012	1	Seat Track Set
2	116-5659	1	Cover-Suspension Bellows
3	140-8004	1	Cover-Back
4	140-8005	1	Cover-Cushion
5	116-8911	1	Knob-Adjuster
6	82-2190	1	Switch-Bail
7	109-9803	1	Arm Rest Set
8	109-9802	1	Arm Rest Pad Set
9	126-2061	1	Seat Belt Service Kit

Motion Control Assembly

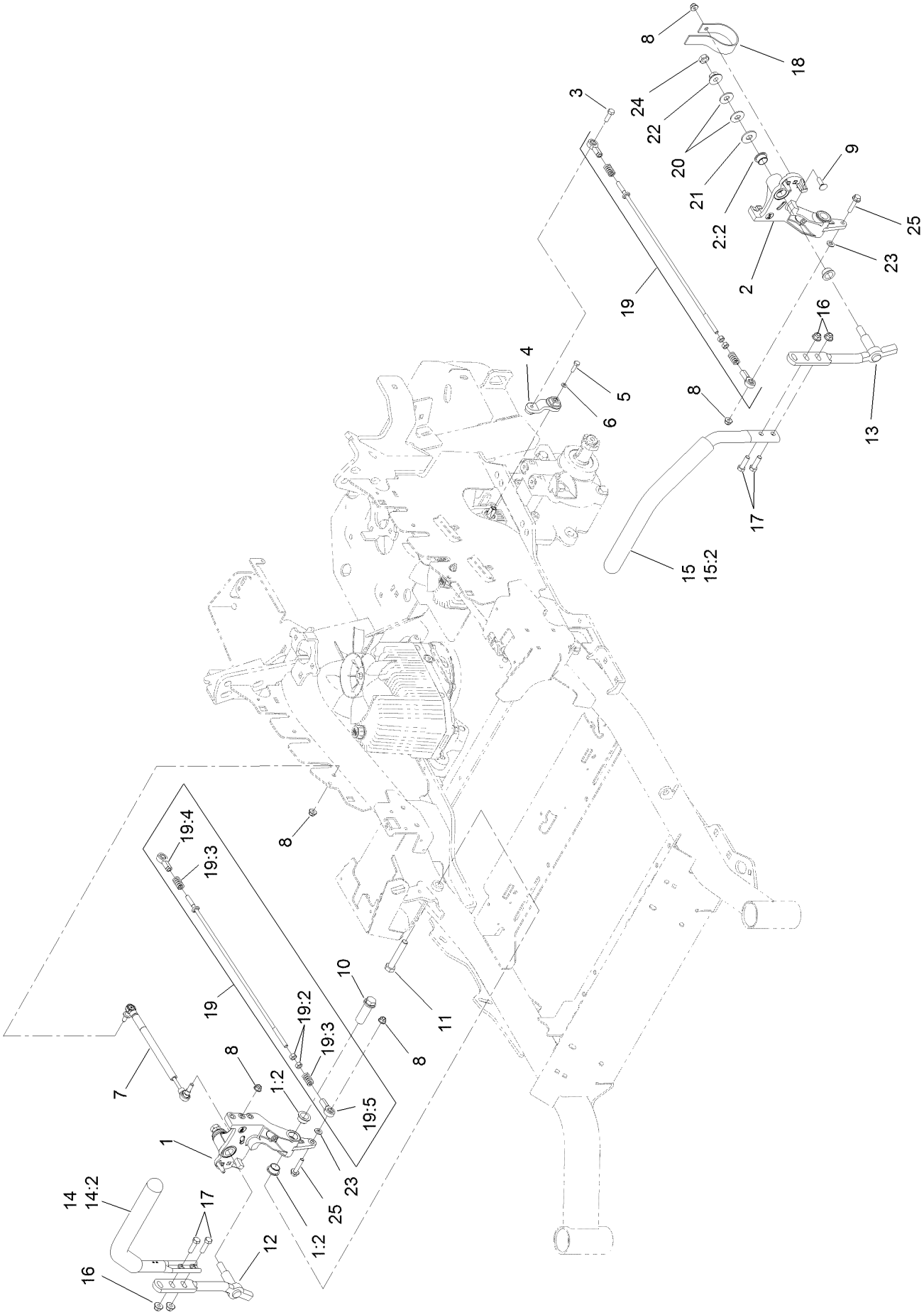

Motion Control Assembly (continued)

Ref.	Part Number	Qty.	Description
1	116-0880	1	RH Motion Control And Bushing ASM
1:2	109-8054	4	Bushing-Flange
2	116-0881	1	LH Motion Control And Bushing ASM
2:2	109-8054	4	Bushing-Flange
3	116-0648	2	Screw-HH, Thread Locking ●
4	109-4581	2	Arm-Control, Pump
5	9080046	2	Screw-HH ●
6	1-303435	2	Washer-Spring
7	116-0027	2	Damper-Control, Motion
8	104-8300	8	Nut-HF, NI
9	3230-2	2	Bolt-CARR
10	109-5891	2	Hub-Threaded
11	325-12	2	Screw-HH
12	116-0039	1	Lever-Control Motion, RH
13	116-0040	1	Lever-Control Motion, LH

Ref.	Part Number	Qty.	Description
14	135-4371	1	RH Handle ASM
14:2	109-5668	1	Grip-Lever, Control
15	135-4373	1	LH Handle ASM
15:2	109-5668	1	Grip-Lever, Control
16	104-8301	4	Nut-HF, NI
17	323-7	4	Screw-HH
18	109-5575	2	Spring-Leaf
19	109-8106	2	Front Pump Linkage ASM
19:2	3219-2	2	Nut-Hex
19:3	1-323245	2	Spring-Compression
19:4	1-633152	1	Balljoint-LH
19:5	1-543017	1	Balljoint-RH
20	109-9505	4	Washer-Spring
21	3256-6	2	Washer-Flat
22	32128-56	2	Nut-HF
23	3256-23	2	Washer-Plain
24	3218-5	2	Nut-Jam
25	115-1794	2	Screw-HHF

● Use Pro-Lock, Nut Type (P/N 1-840022, .5ml tube) on threads.

Fender, Console and Control Assembly

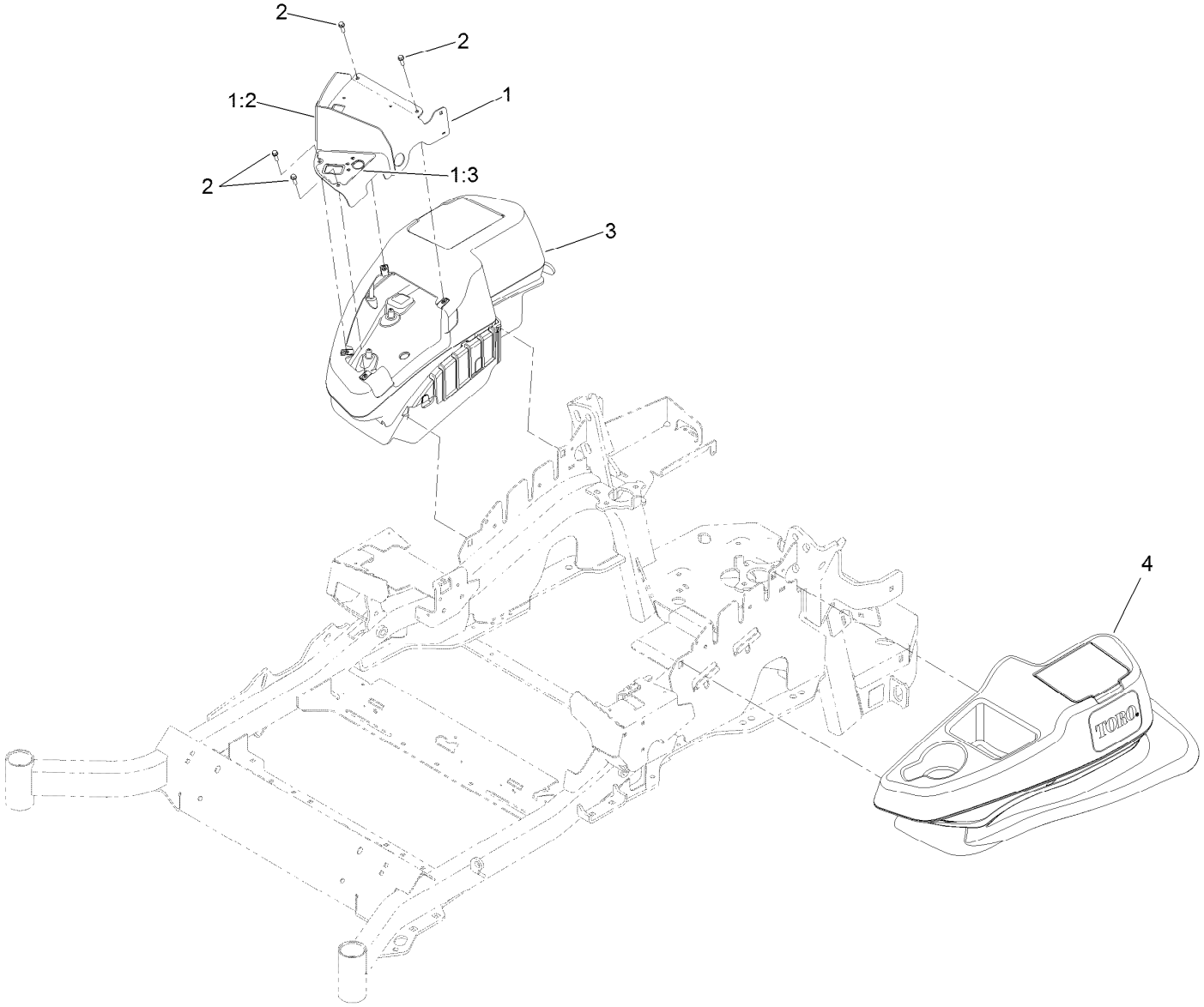

Fender, Console and Control Assembly (continued)

Ref.	Part Number	Qty.	Description
1	135-3012	1	Panel Cover ASM
1:2	136-5531	1	Decal-Horizon
1:3	136-5530	1	Decal-Control Panel
2	32105-15	4	Screw-HWH
3	115-7400	1	RH Console ASM
4	115-7401	1	LH Console ASM

RH Console Assembly No. 115-7400

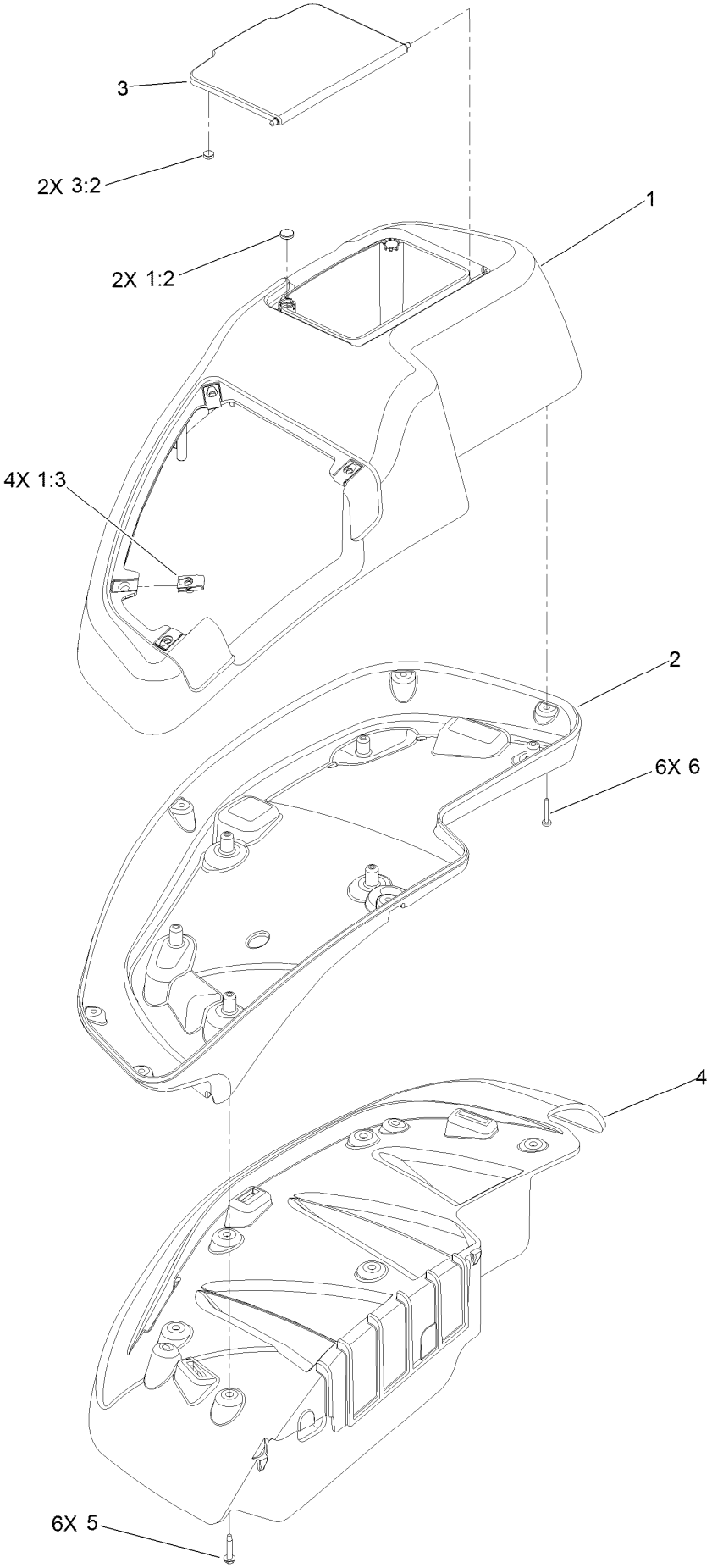

RH Console Assembly No. 115-7400 (continued)

Ref.	Part Number	Qty.	Description
1	114-1538	1	RH Wide Top Console ASM
1:2	117-0883	2	Puck
1:3	107069	4	Clip
2	115-3643	1	Console-Lower, RH Wide
3	114-1537	1	Wide Lid ASM
3:2	114-5896	2	Magnet
4	109-9083	1	Fender-Wide, RH
5	32144-89	6	Screw-Thread Forming
6	117-0347	6	Screw-PPH

LH Console Assembly No. 115-7401

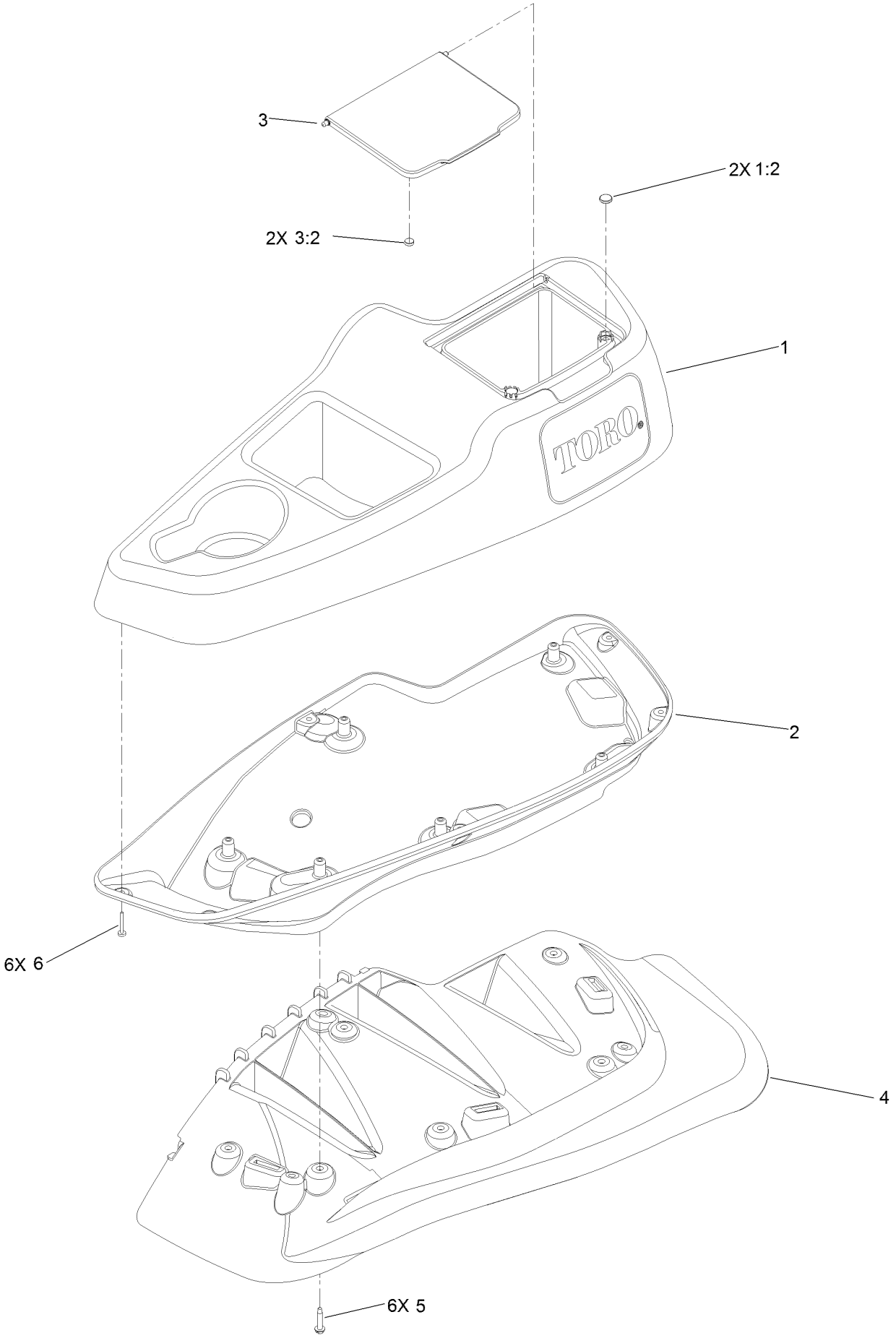

LH Console Assembly No. 115-7401 (continued)

Ref.	Part Number	Qty.	Description
1	114-1539	1	LH Wide Console Top ASM
1:2	117-0883	2	Puck
2	115-3641	1	Console-Lower, LH Wide
3	114-1537	1	Wide Lid ASM
3:2	114-5896	2	Magnet
4	109-9085	1	Fender-Wide, LH
5	32144-89	6	Screw-Thread Forming
6	117-0347	6	Screw-PPH

Electrical Assembly

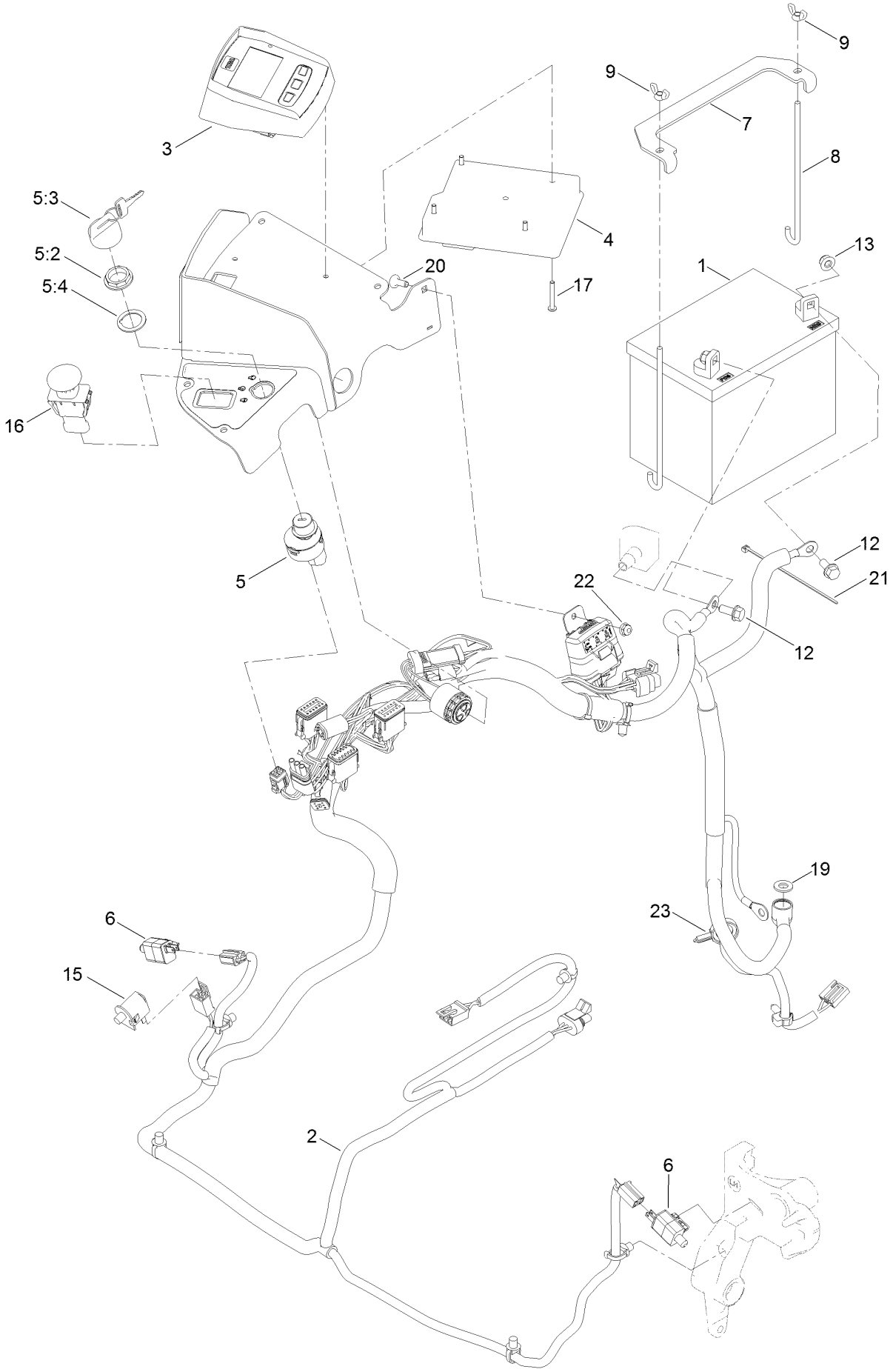

Electrical Assembly (continued)

Ref.	Part Number	Qty.	Description
1		1	Battery (340 CCA, Wet)●■
2	135-7894	1	Harness-Wire
3	126-9976	1	Module-Horizon
4	135-3427	1	Module-Mcu
5	126-6285	1	Ignition Switch ASM
5:2	108-8660	1	Nut-Mounting
5:3	106-5270	1	Ignition Key Set
5:4	108-8659	1	Washer-Backup
6	110-6765	2	Switch
7	116-0042-03	1	Strap-Tie Down, Battery
8	1-633651	2	Bolt-Holddown
9	1-543792	2	Wingnut
12	3234-5	2	Screw-HHF
13	104-8300	2	Nut-HF, NI
15	82-2190	1	Switch-Bail
16	126-6187	1	Switch-PTO, Sealed
17	126-5092	4	Screw-PPH
19	3256-24	1	Washer-Plain
20	1-807512	1	Bolt-CARR
21	1-303287	1	Tie-Cable
22	104-7201	1	Nut-HF, NI
23	105-1853	1	Clamp-Hose

● Obtain locally.

■ Not serviced separately

Wire Harness Assembly No. 135-7894

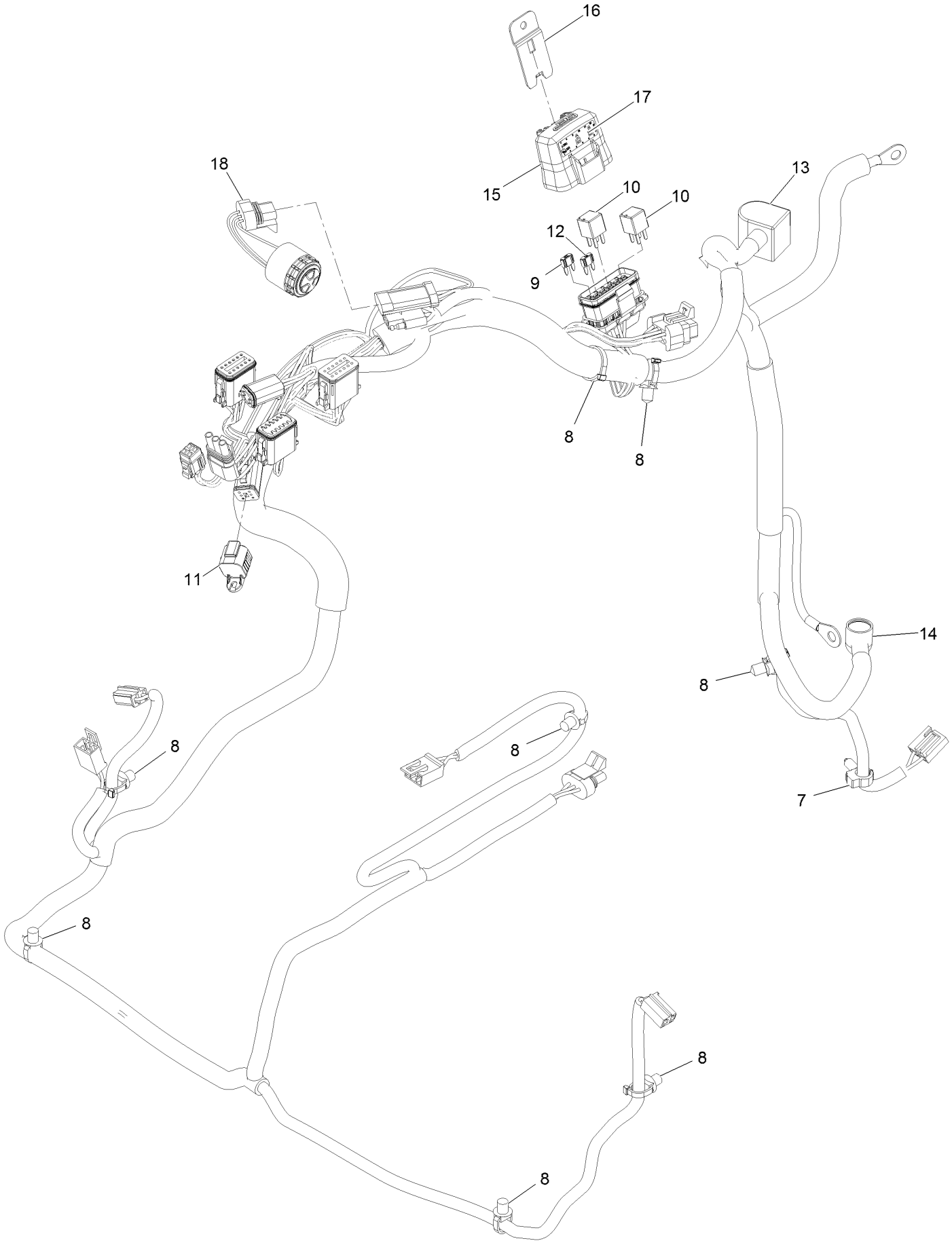

Wire Harness Assembly No. 135-7894 (continued)

Ref.	Part Number	Qty.	Description
7	32180-037	1	Clip-Harness
8	32180-030	8	Clip-Tie
9	121-8868	1	Fuse-Mini Blade, 20 Amp
10	126-3991	2	Relay-Micro
11	32180-156	1	Cap-Plug, 6 Way
12	121-8867	1	Fuse-Mini Blade, 15 Amp
13	126-8876	1	Insulator-Battery
14	1-543393	1	Insulator-Solenoid
15	32180-176	1	Cover-Block, Fuse
16	32180-177	1	Clip-Mounting
17	142-2472	1	Decal-Fuse
18	126-6286	1	Alarm-Dual Tone

Deck Lift Assembly

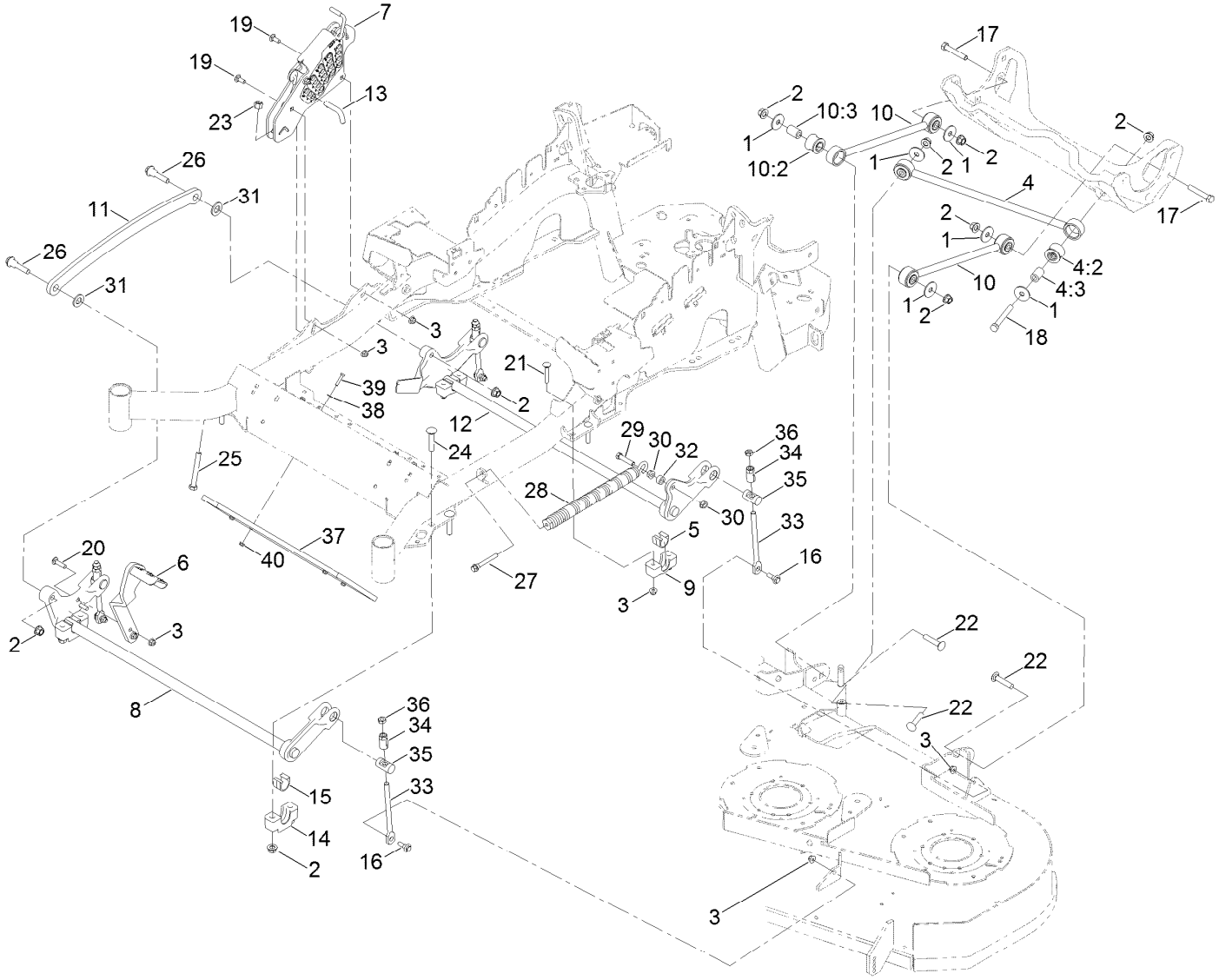

Deck Lift Assembly (continued)

Ref.	Part Number	Qty.	Description
1	86-1990	6	Washer-Thrust
2	99-5107	12	Nut-Lock
3	104-8301	12	Nut-HF, NI
4	109-5013	1	Panhard Rod ASM
4:2	109-5009	2	Bushing-Suspension, Rubber
4:3	109-5010	2	Spacer
5	109-7173	2	Bearing-Cross Shaft, Rear
6	116-1919-01	1	Lever-Foot
7	109-7438	1	HOC ASM
8	126-2477-03	1	Decklift-Front
9	127-0553	2	Support-Bearing, Cross Shaft (Rear)
10	109-7952	2	Deck Strut ASM
10:2	109-5009	2	Bushing-Suspension, Rubber
10:3	109-5010	2	Spacer
11	116-0797-03	1	Link-Lift, Deck
12	116-2645-03	1	Lift-Deck, Rear
13	116-5584	1	Pin-HOC
14	109-9409	2	Support-Bearing, Cross Shaft (Front)
15	109-9410	2	Bearing-Cross Shaft, Front
16	109-9840	4	Screw-Shoulder, HHF
17	325-12	2	Screw-HH
18	325-17	1	Screw-HH
19	3231-2	2	Bolt-CARR
20	3231-4	2	Screw-CARR
21	3231-7	4	Screw-CARR
22	3233-34	3	Screw-CARR
23	3296-23	1	Nut-Lock, NI
24	116-1700	4	Bolt-CARR
25	116-0559	1	Bolt-TAP
26	116-2022	2	Screw-HHF, Shoulder
27	92-7674	1	Bolt-Shoulder
28	116-0000	1	Spring-Extension
29	109-9065	1	Screw-HH
30	32128-37	2	Nut-HF
31	3256-28	2	Washer-Flat
32	116-2695	1	Spacer
33	109-8007	4	Link-Adjuster, Deck Lift
34	109-7840	4	Adjuster-Lift, Deck
35	109-8353	4	Trunnion
36	3218-5	4	Nut-Jam
37	132-5075-01	1	*obs* Weight-Toe Board
38	3256-22	4	Washer-Flat
39	321-8	4	Screw-HH
40	104-7201	4	Nut-HF, NI

Height-of-Cut Assembly No. 109-7438

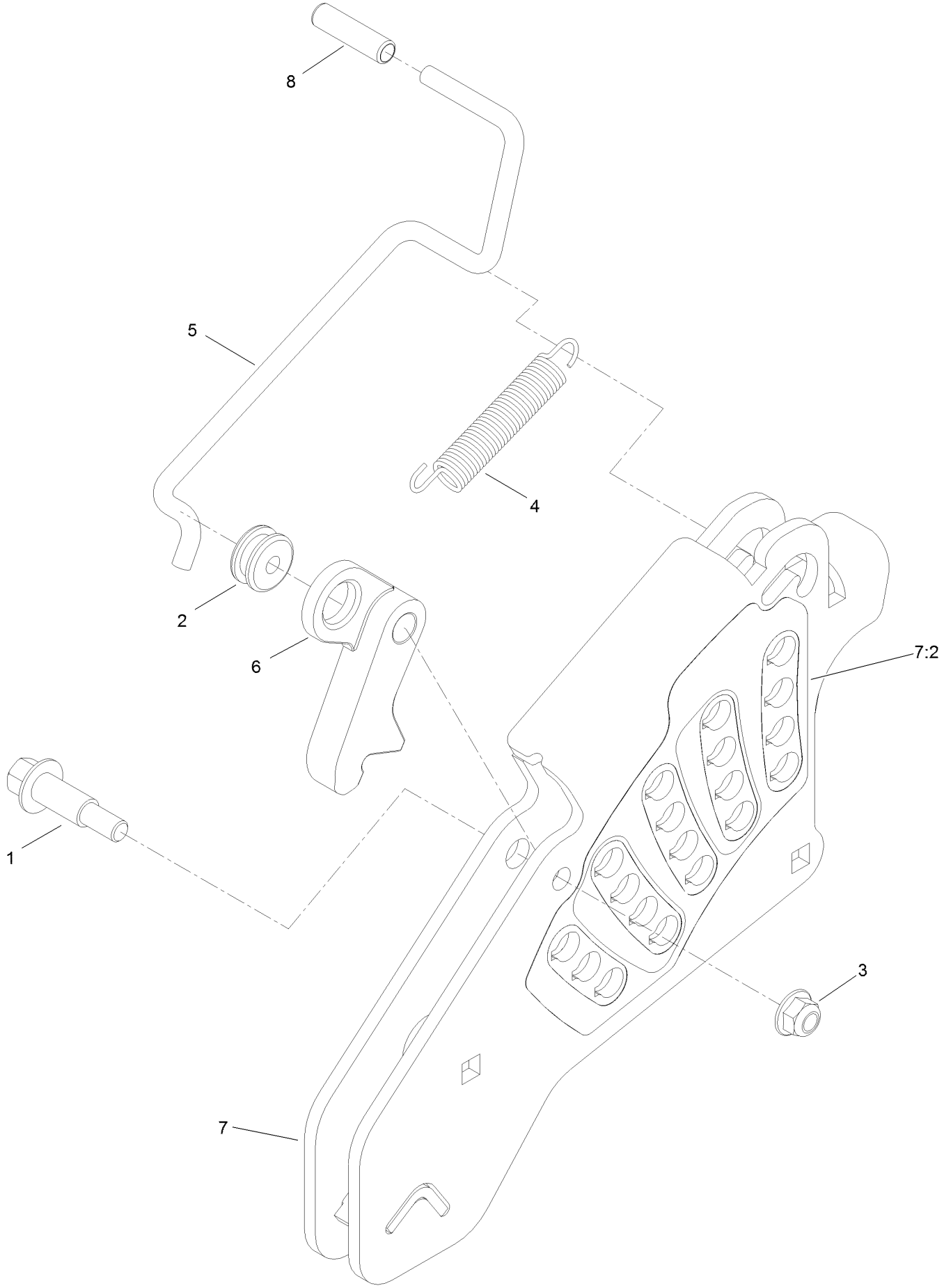

Height-of-Cut Assembly No. 109-7438 (continued)

Ref.	Part Number	Qty.	Description
1	62-1330	1	Bolt-Shoulder
2	109-7130	1	Grommet
3	104-8301	1	Nut-HF, NI
4	109-7124	1	Spring-Extension
5	109-7128	1	Rod-Lock, Transport
6	116-0118	1	Pawl-Transport, HOC
7	109-7335	1	HOC Plate ASM
7:2	126-4398	1	Decal-HOC
8	109-8250	1	Grip-Lever

Engine Assembly

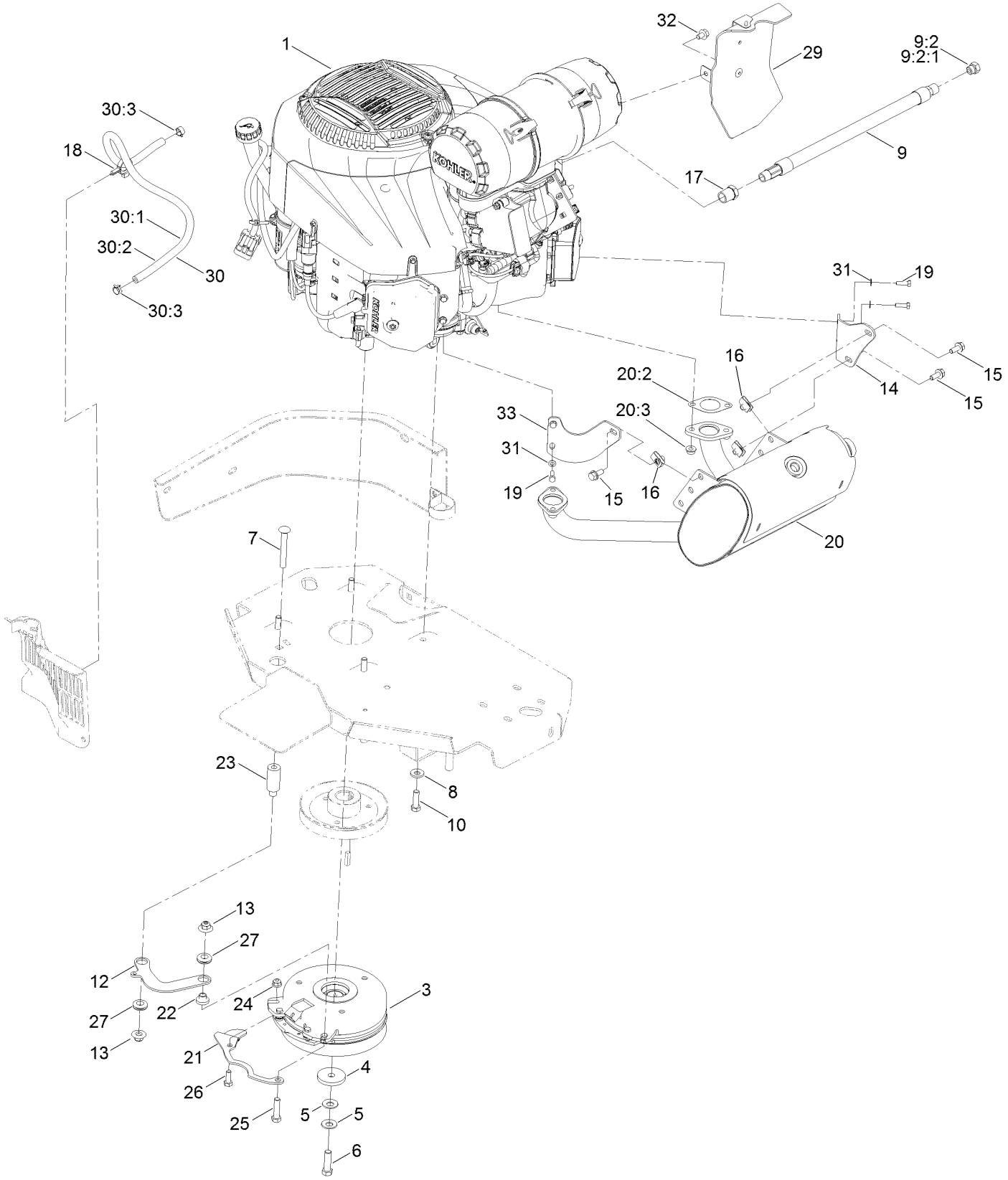

Engine Assembly (continued)

Ref.	Part Number	Qty.	Description
1		1	Engine-Kohler Ecv980 ▲
3	126-4185	1	Clutch Kit
4	109-6919	1	Washer-Plain
5	1-603610	2	Washer-Spring
6	109-9761	1	Screw-HH
7	3231-42	1	Screw-CARR
8	98-5975	4	Washer-Belleville
9	116-5316	1	Oil Drain Hose ASM
9:2	353-508	1	Plug-HH ■
9:2:1	237-42	1	O-Ring
10	323-7	4	Screw-HH
12	116-3317-01	1	Link-Anchor, Clutch
13	109-6658	2	Nut-Flange, NI
14	116-9048	1	Bracket-Muffler
15	3234-5	3	Screw-HHF
16	94-2413	3	Nut-U
17	103-1390	1	Bushing
18	105-1853	1	Clamp-Hose
19	116-4295	4	Screw-HH
20	126-4645	1	Muffler

Ref.	Part Number	Qty.	Description
20	126-5423	1	Muffler Kit
20:2	126-0359	2	Gasket-Exhaust
20:3	116-9626	4	Nut-Flange, Lock
21	116-3331-01	1	Belt-Guide
22	116-3318	1	Spacer
23	116-3319	1	Spacer
24	104-8300	1	Nut-HF, NI
25	323-8	1	Screw-HH
26	322-4	1	Screw-HH
27	93-5108	2	Grommet-Rubber
29	135-7328	1	Baffle Kit
29:2	104-2628	1	Screw ●
28:3	68-9410	1	Screw-HHF ●
30	126-0231	1	Fuel Line ASM
30:1	109-0284	1	Hose-Fuel
30:2	126-0232	1	Sleeve-Thermal
30:3	2412-98	2	Clamp-Hose
31	1-303435	4	Washer-Spring
32	68-9410	1	Screw-HHF
33	126-5620	1	Bracket-Muffler, Front

● Not illustrated
▲ Not serviced separately

■ Torque to 24-26 ft-lb

Deck Assembly

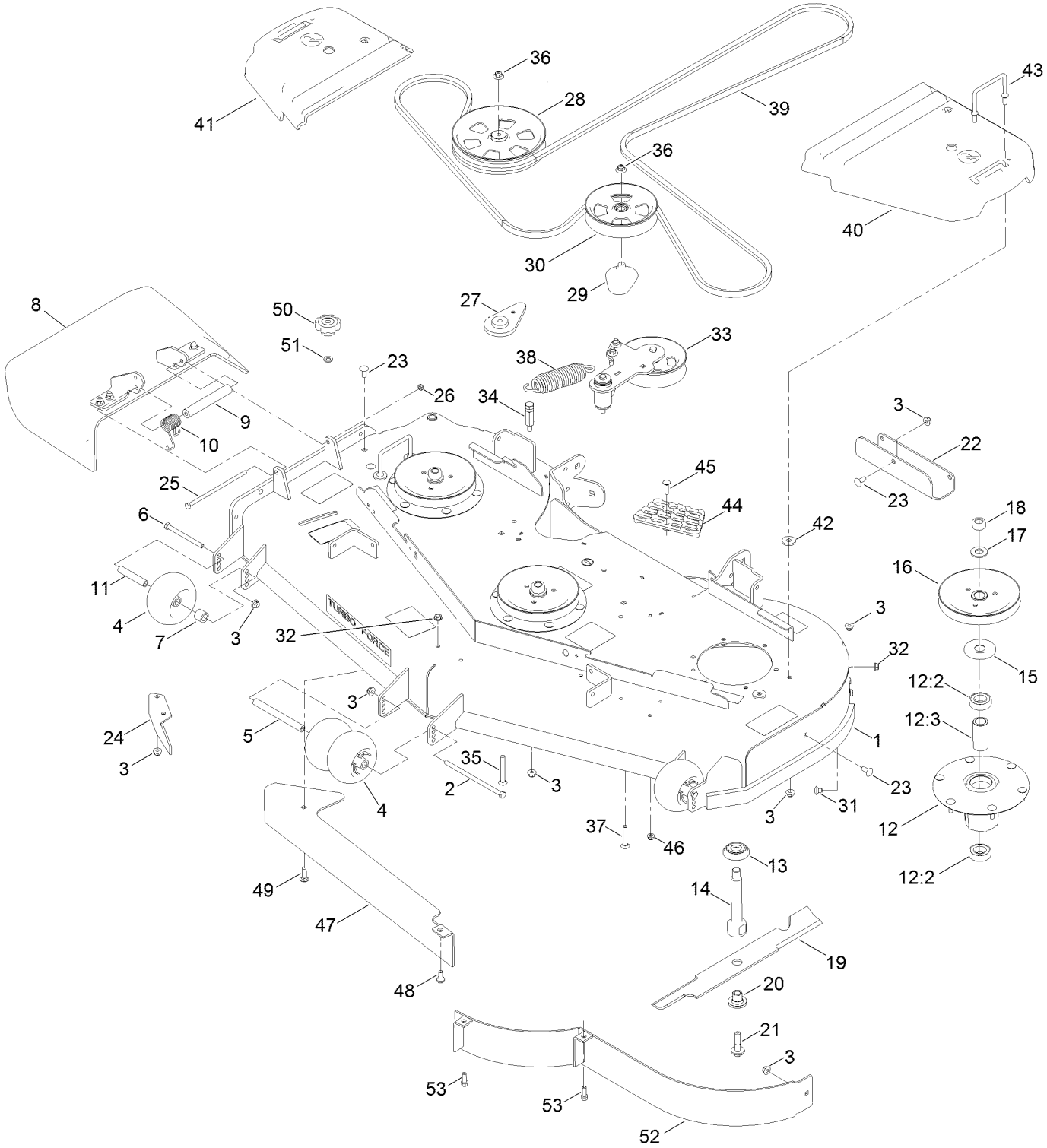

Deck Assembly (continued)

Ref.	Part Number	Qty.	Description
1	140-1169	1	Deck Decal ASM
2	108-5388	1	Screw-HH
3	104-8301	32	Nut-HF, NI
4	1-603299	4	Roller-Scalp, Anti
5	98-5967	1	Spacer-Wheel
6	323-23	2	Screw-HH
7	98-7913	2	Tube-Spacer
8	108-2792	1	Rubber Deflector ASM
9	105-4622	1	Spacer
10	108-4052	1	Spring-Torsion
11	98-7912	2	Tube-Spanner
12	137-9780	3	Spindle ASM
12:2	116-0720	2	Bearing-Ball
12:3	138-6042	1	Spacer-Bearing
13	137-9784	3	Guard-Bottom
14	138-6045	3	Shaft-Spindle
15	103-1330	3	Guard-Bearing, Top
16	138-6059	3	Sheave-Drive, Blade
17	103-2802	3	Washer
18	116-7306	3	Nut-Hex
19	140-1240	3	Blade
20	137-9787	3	Bushing-Hex
21	109-9220	3	Screw-Sems
22	121-8031-01	1	Plate-Skid
23	3231-27	6	Screw-CARR
24	106-3216-01	1	Baffle-Discharge
25	322-50	1	Screw-HH
26	3296-47	1	Nut-Lock,NI
27	109-9416	1	Spacer-Idler
28	132-4734	1	Pulley-Idler,Flat
29	109-2872	1	Spacer-Pulley
30	136-5404	1	Pulley-Idler, Flat
31	108-5387	3	Screw-CARR
32	3290-357	6	Nut-HSF
33		1	Idler Arm ASM ●
34	114-5867	1	Anchor-Spring, Tall
35	3231-42	1	Screw-CARR
36	109-6658	2	Nut-Flange, NI
37	3231-40	1	Bolt-CARR
38	116-6317	1	Spring-Extension
39	132-5982	1	Belt-V
40	109-6938	1	Cover-Belt, LH
41	116-0094	1	Cover-Belt, RH
42	1-373034	4	Washer
43	109-6982	2	Wireform-Cover
44	126-4781-03	1	Step-Deck
45	3230-3	1	Screw-CARR
46	104-8300	1	Nut-HF, NI
47	138-6051-01	1	Plate-Baffle
48	94-7582	1	Bolt-Shoulder
49	3231-25	1	Bolt-CARR
50	109-1092	1	Knob
51	100-4852	1	Washer-Hardened
52	114-5842-01	1	Baffle
53	92-1624	2	Screw-HWH Thd Form

● Not serviced separately

Deck Decal Assembly No. 140-1169

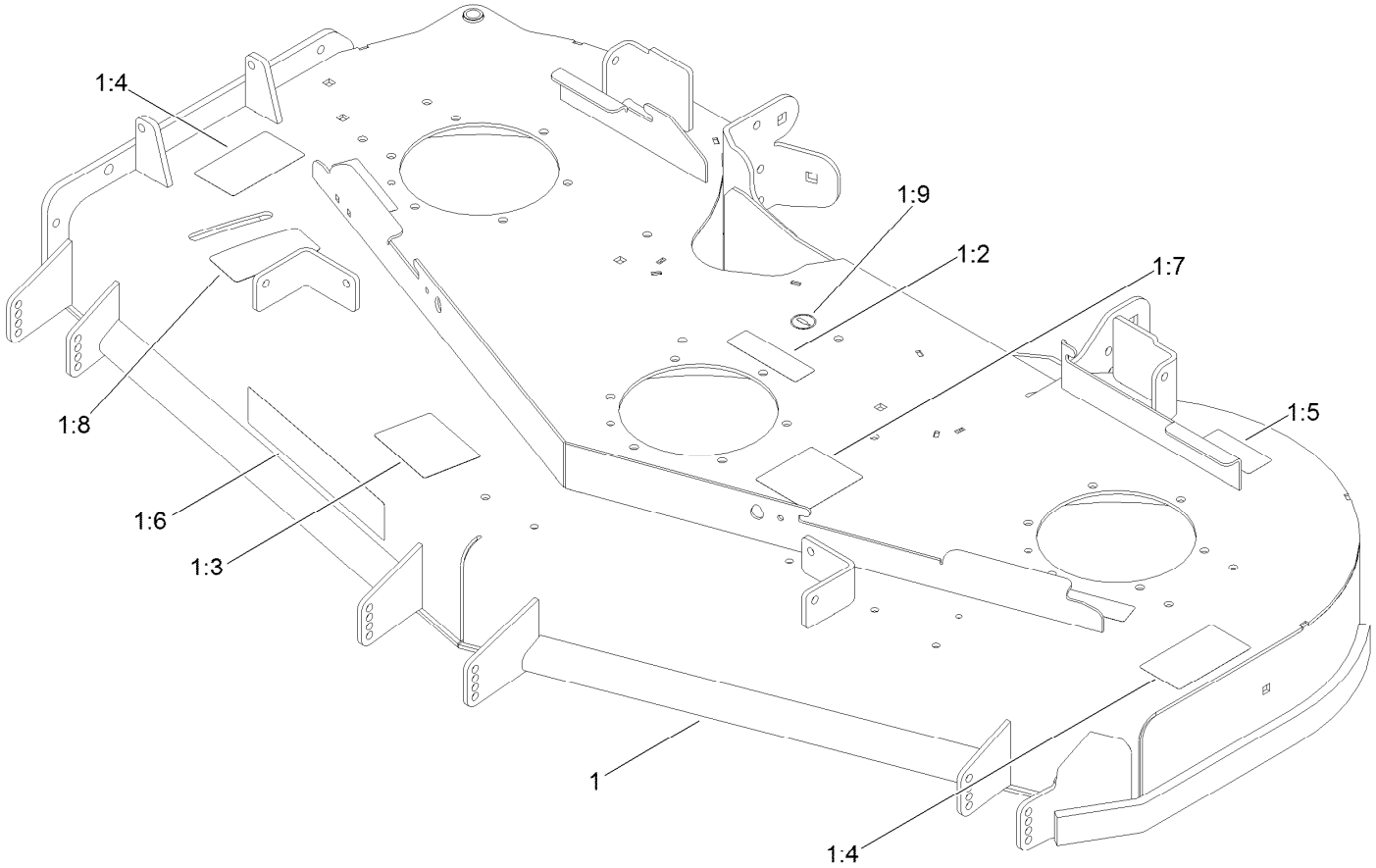

Deck Decal Assembly No. 140-1169 (continued)

Ref.	Part Number	Qty.	Description
1		1	Deck ASM ●
1:2	112-9028	3	Decal-Cover, Missing
1:3	127-0326	1	Decal-Scalp, Anti
1:4	117-3848	2	Decal-Danger
1:5	116-8283	1	Decal-Torque, Bolt
1:6	107-1619	1	Decal
1:7	136-5508	1	Decal-Routing, Deck Belt
1:8	131-1180	1	Decal-Adjustment, Baffle
1:9	58-6520	1	Decal-Grease

● Not serviced separately

Rubber Deflector Assembly No. 108-2792

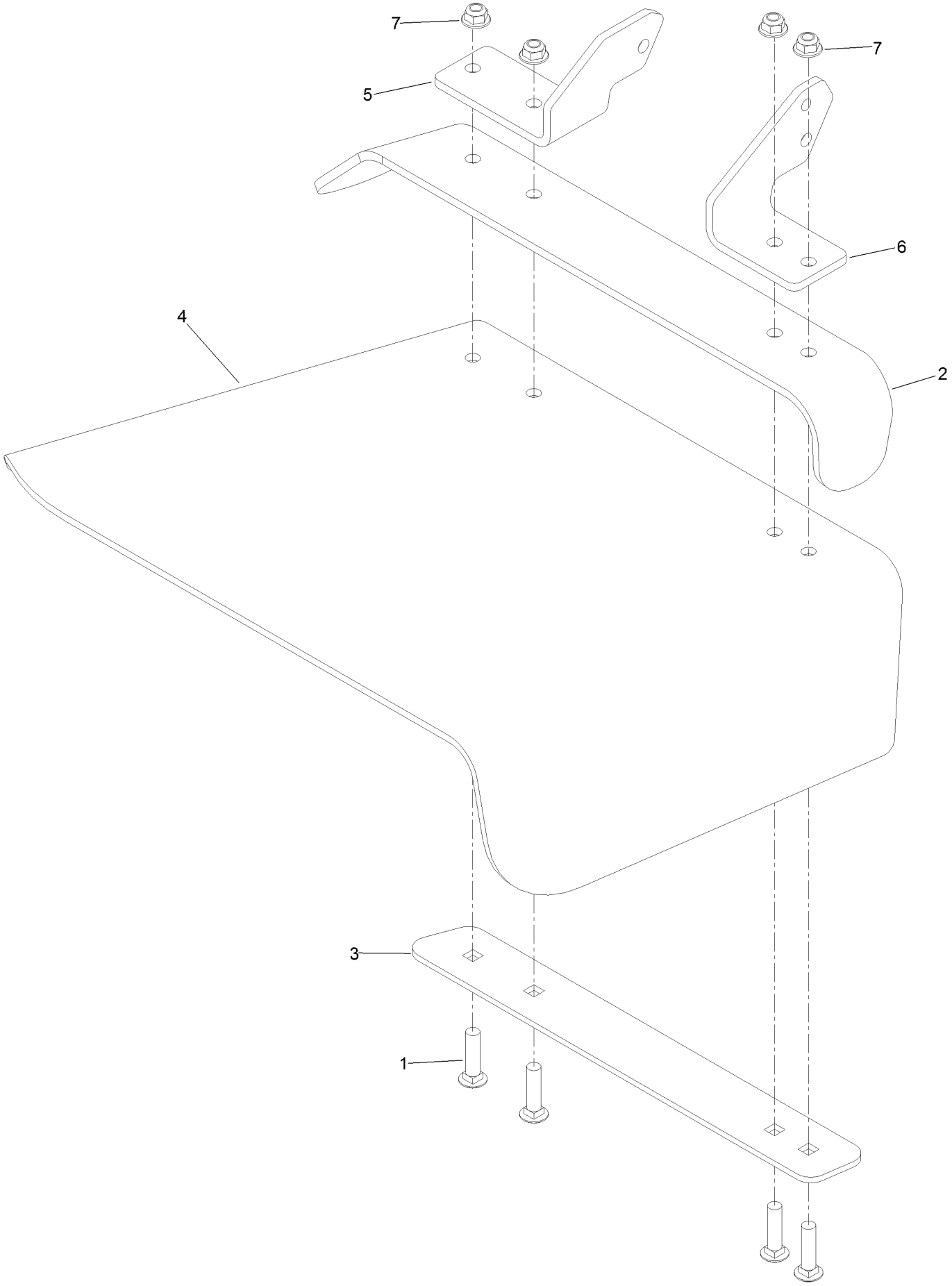

Rubber Deflector Assembly No. 108-2792 (continued)

Ref.	Part Number	Qty.	Description
1	3231-4	4	Screw-CARR
2	106-3246-01	1	Deflector
3	106-3248-03	1	Strap-Discharge
4	108-5029	1	Deflector-Rubber
5	108-4059-01	1	Plate-Hinge, Rear
6	106-3253-01	1	Plate-Hinge, Front
7	104-8301	4	Nut-HF, NI

Idler Arm Assembly

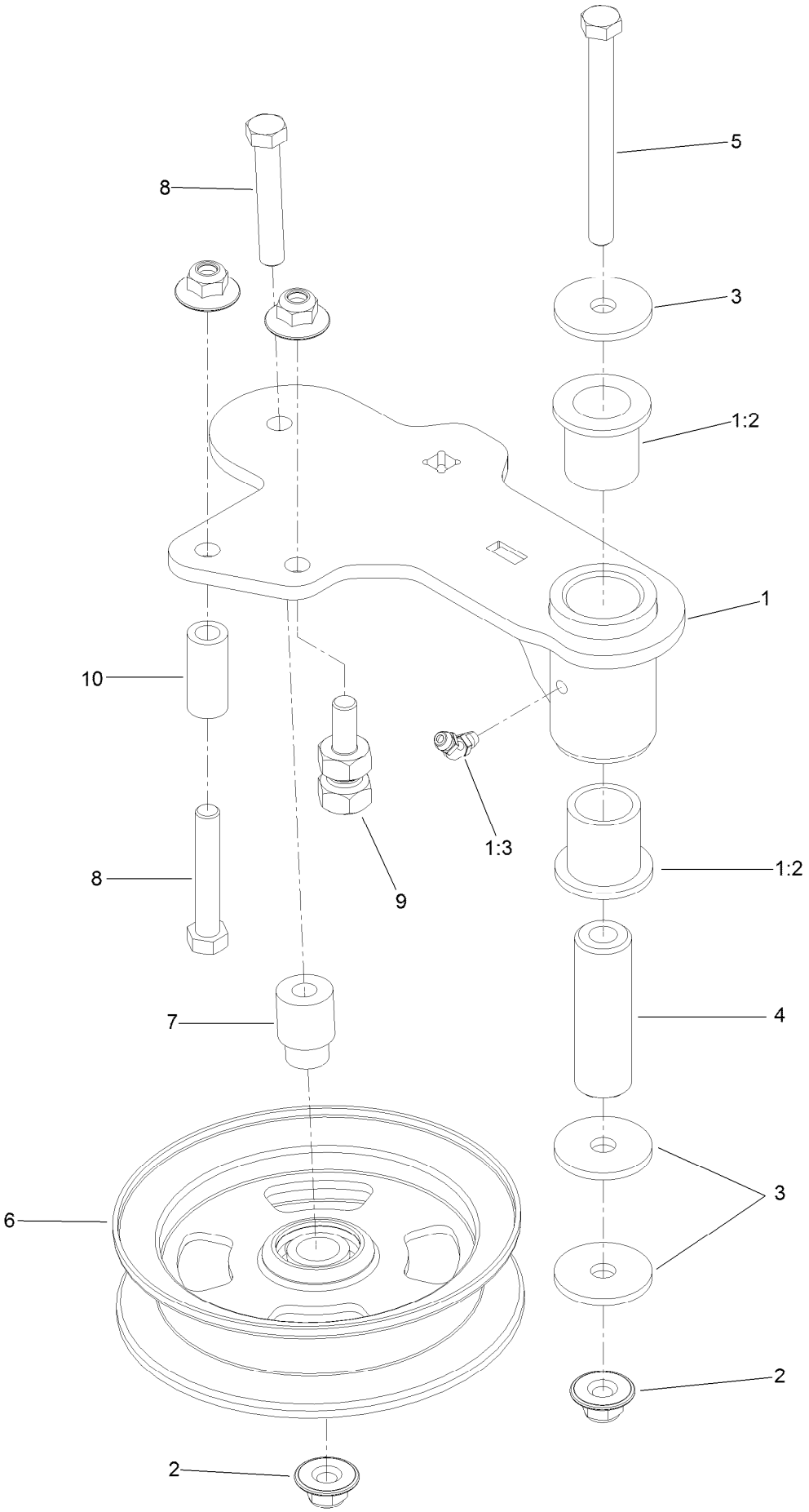

Idler Arm Assembly (continued)

Ref.	Part Number	Qty.	Description
1	114-5870	1	Idler Arm ASM
1:2	1-303514	2	Bearing-Flanged
1:3	1481	1	Fitting-Grease
2	109-6658	4	Nut-Flange, NI
3	1-213069	3	Washer
4	114-5848	1	Spacer-Plain
5	98-5961	1	Screw-HH
6	132-9425	1	Pulley-Idler, Flat
7	112-4212	1	Mount-Pulley
8	323-11	2	Screw-HH
9	132-4729	1	Anchor-Spring, Short
10	104-0151	1	Spacer

Frame Decal Assembly

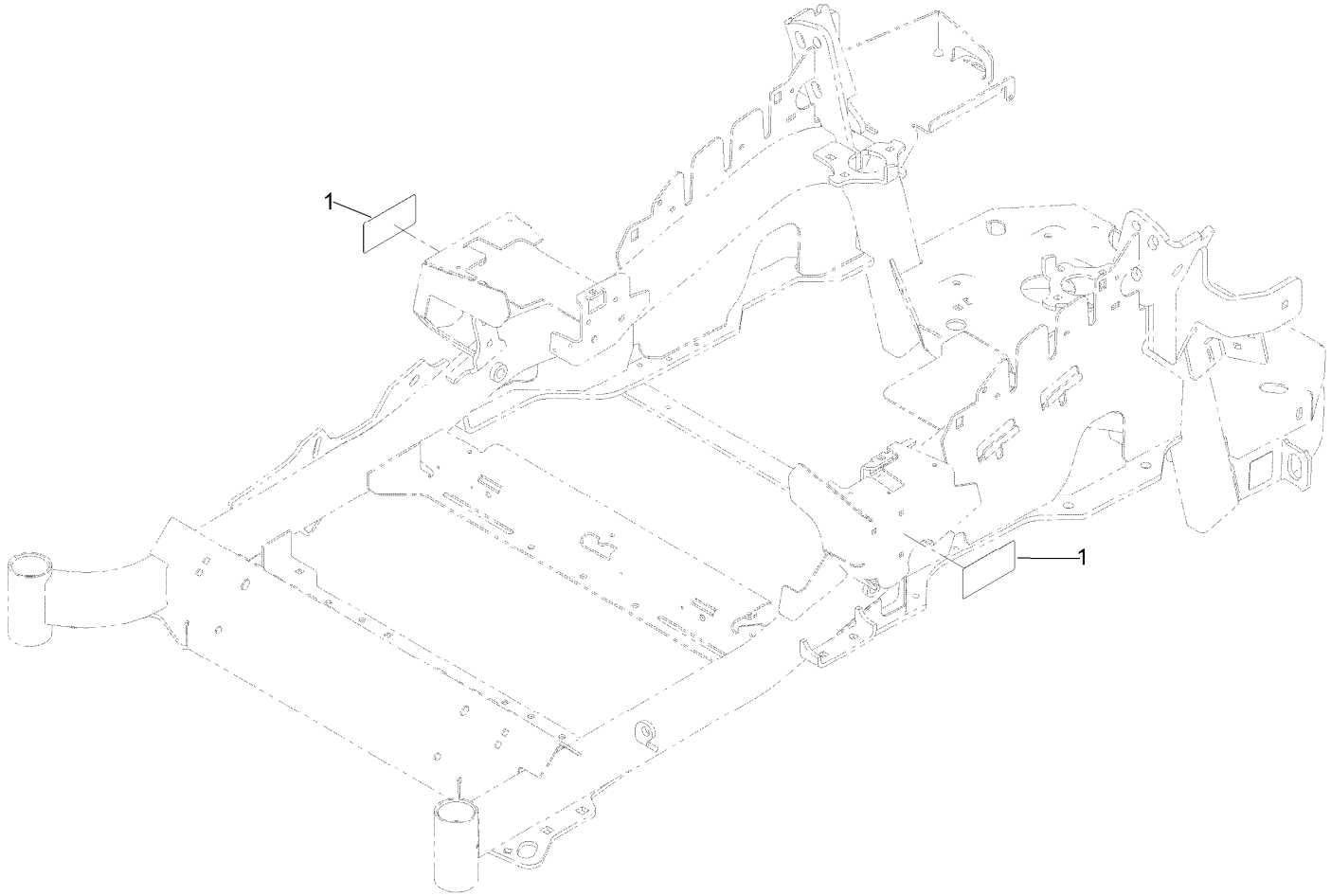

Frame Decal Assembly (continued)

Ref.	Part Number	Qty.	Description
1	120-5895	2	Decal

Attachments and Accessories

For 72946 Z Master Professional 6000 Series Riding Mower with 60in TURBO FORCE Side Discharge Mower

Product Name	Model/Part
Turbo Baffle Kit	107-1634
Anti-Scalp Kit (Trim Side)	108-4140
Hitch Kit	109-9487
Hypr-Oil 500 (quart)	114-4713
Hypr-Oil 500 (gallon)	114-4714
Hypr-Oil 500-5 (5 gallon)	114-4715
Bimini Folding Shade Assembly	115-4510
Roller Striper Kit	115-7470
Light Kit	116-1154
Seat Cover (W/arm rest)	117-0095
Operator Controlled Discharge Chute Kit	117-3600
Z Stand Kit	121-4811
Seat Tilt Frame and ISO Mount Kit	121-7596
Jack Mount Kit	127-6665
Jack Kit	127-6666
Power Deck Lift Kit	132-5986
Worklight Kit	135-7320
Bucket Mount Kit	137-9216
Trimmer Mount	137-9769
Recycler Kit	139-6655
24x12n12 - Tweel Turf	139-7891
Blade-20.5 High Flow	140-1240
Blade-20.50 Atomic	140-1241
Blade-20.50 Medium Flow	140-4853
Blade-20.50, Low Flow	140-4854
Blade-20.50 Recycler	140-4855
6 Pack-Blade, 20.5 High Flow	140-4877
6 Pack-Blade, 20.5 Med Flow	140-4878
6 Pack-Blade, 20.5 Low Flow	140-4879
6 Pack-Blade, 20.5 Atomic	140-4880
6 Pack-Blade, 20.5 Recycler	140-4881
Weight Kit, Under Toe Board	140-4958
Toro Rider Over Seat Bag	490-7317
Toro Deluxe Rider Cover	490-7319
Toro Rider Arm Rest Bag	490-7320
Spark Arrestor Screen	75-6880
Blower and Drive Kit	78553
E-Z Vac Triple Bagging System	78563
E-Z Vac DFS Collection System	78567
Filter Minder Gauge	99-4664
Trash Holder Kit	TC26

Notes:

TORO®

Count on it.