Form No. 3466-480 Rev A

TORO®

Count on it.

Parts Catalog

60in Z Master® Professional 2000 Series

Riding Mower

Model No. 77294—Serial No. 415260647 and Up

Register at www.Toro.com.
Original Instructions (EN)

3466-480 A

Ordering Replacement Parts

To order replacement parts, please supply the part number, the quantity, and the description of each part desired.

Understanding Reference Numbers

Each identified part in an illustration has a reference number. The reference number for a part also appears in the parts list, along with other information about the part.

This catalog uses two special reference number formats, one to indicate parts in a service assembly and another to indicate the quantity of a given part in an illustration.

Service Assembly Reference Numbers

Parts in service assemblies have reference numbers in the form a:b. The a represents the reference number of the entire service assembly and the b represents a sequential number unique to each part within the service assembly.

For example, a wheel assembly might be identified by reference number 6, the tire by 6:1, the valve by 6:2, and the wheel by 6:3. When you order the assembly identified by reference number 6, you receive all parts identified by reference numbers 6:1,6:2, and 6:3. However, you may also order any part individually. Reference numbers of this type appear in illustration and in parts lists.

Reference Numbers Indicating Quantity

In an illustration, if a reference number indicates more than one part, the reference number has the form nX y. The n represents the quantity of the part, the X is the multiplication symbol, and the y represents the reference number.

For example, in an illustration, the reference number 2X 37 means that two of the parts identified by reference number 37 are indicated.

Contents

Frame Assembly . . . 4
Roll-Over Protection System Assembly No. 139-8063 . . . 6
Hydro Drive Assembly . . . 8
LH Transaxle Assembly No. 145-8424 . . . 10
RH Transaxle Assembly No. 145-8425 . . . 12
Throttle, Choke and Guards Assembly . . . 14
Fuel Assembly . . . 16
Fuel Tank Assembly No. 147-2403 . . . 18
Seat Mount Assembly . . . 20
Motion Control Assembly . . . 22
Left and Right Motion Control Assembly . . . 24
Front Caster Wheel Assembly . . . 26
Fork and Caster Assembly . . . 28
Rear Drive Wheel Assembly . . . 30
Electrical Assembly . . . 32
Wire Harness Assembly No. 147-2363 . . . 34
Deck Lift Assembly . . . 36
Deck Strut Assembly No. 140-1179 . . . 38
Engine, Clutch and Muffler Assembly . . . 40
Seat Suspension Assembly . . . 42
Seat Assembly No. 147-2383 . . . 44
Decal Assembly . . . 46
Deck Assembly . . . 48
Deck Decal Assembly No. 147-7373 . . . 50
Spindle Assembly No. 139-2357 . . . 52
Deflector Assembly No. 144-2635 . . . 54
Idler Arm Assembly No. 139-1087 . . . 56
Attachments and Accessories . . . 58

© 2023—The Toro® Company
8111 Lyndale Avenue South
Bloomington, MN 55420

Contact us at www.Toro.com.
Printed in the USA.
All Rights Reserved

Frame Assembly

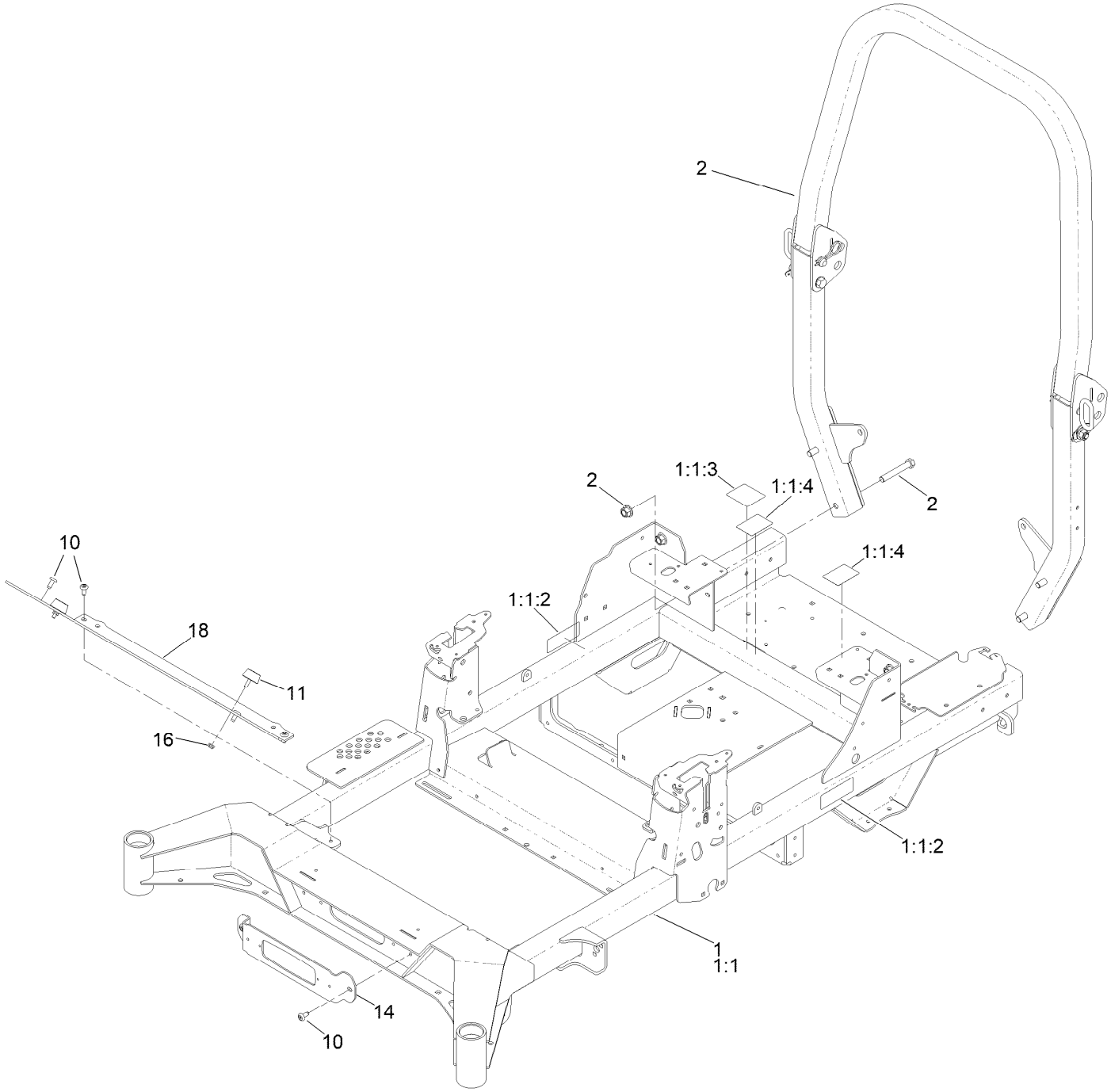

Frame Assembly (continued)

Ref.	Part Number	Qty.	Description
1	145-7031	1	Frame ASM
1:1		1	Frame-60 ●
1:1:2	126-4363	2	Decal-Warning
1:1:3	109-6014	1	Decal-Routing, Belt
1:1:4	147-4982	2	Decal-Bypass
2	139-8063	1	ASM-ROPS

Ref.	Part Number	Qty.	Description
10	138-9753	6	Screw
11	131-8834	2	Bumper
14	140-4994-01	1	Bracket-Light
16	104-7201	2	Nut-HF, NI
18	140-4997-01	1	Toeboard

● Not serviced separately

Roll-Over Protection System Assembly
No. 139-8063

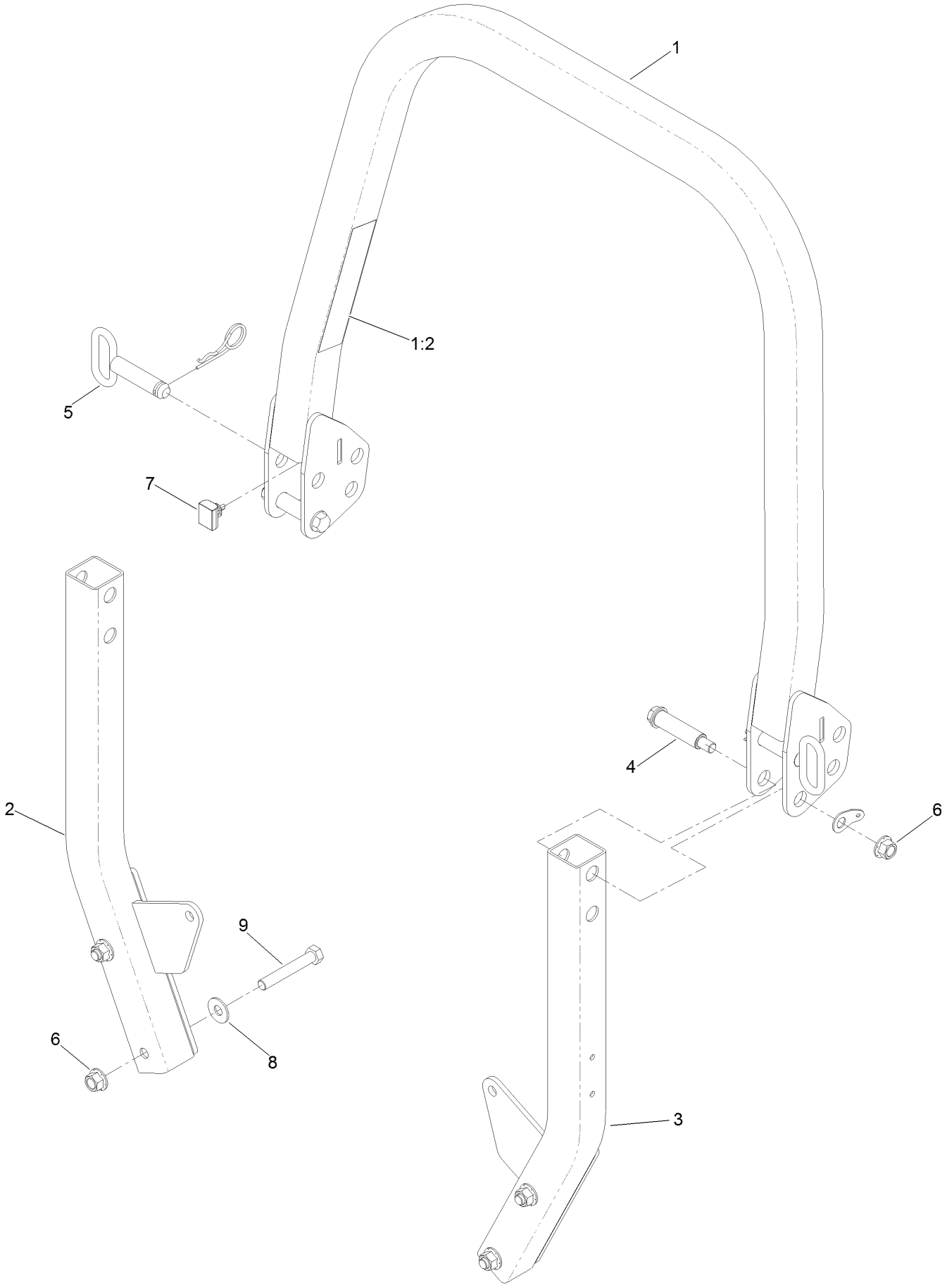

Roll-Over Protection System Assembly No. 139-8063 (continued)

Ref.	Part Number	Qty.	Description
1		1	Upper ROPS ASM ●
1:2	107-3069	1	Decal-Warning
2		1	ASM-ROPS, RH Suspension [black] ●
3		1	ASM-ROPS, LH Suspension [black] ●
4	126-9209	2	Bolt-Shoulder
5	103-4553	2	ROPS Fold Pin ASM
6	99-5107	6	Nut-Lock
7	109-5337	2	Bumper-ROPS
8	109-9505	4	Washer-Spring
9	325-13	4	Screw-HH

● Not serviced separately

Hydro Drive Assembly

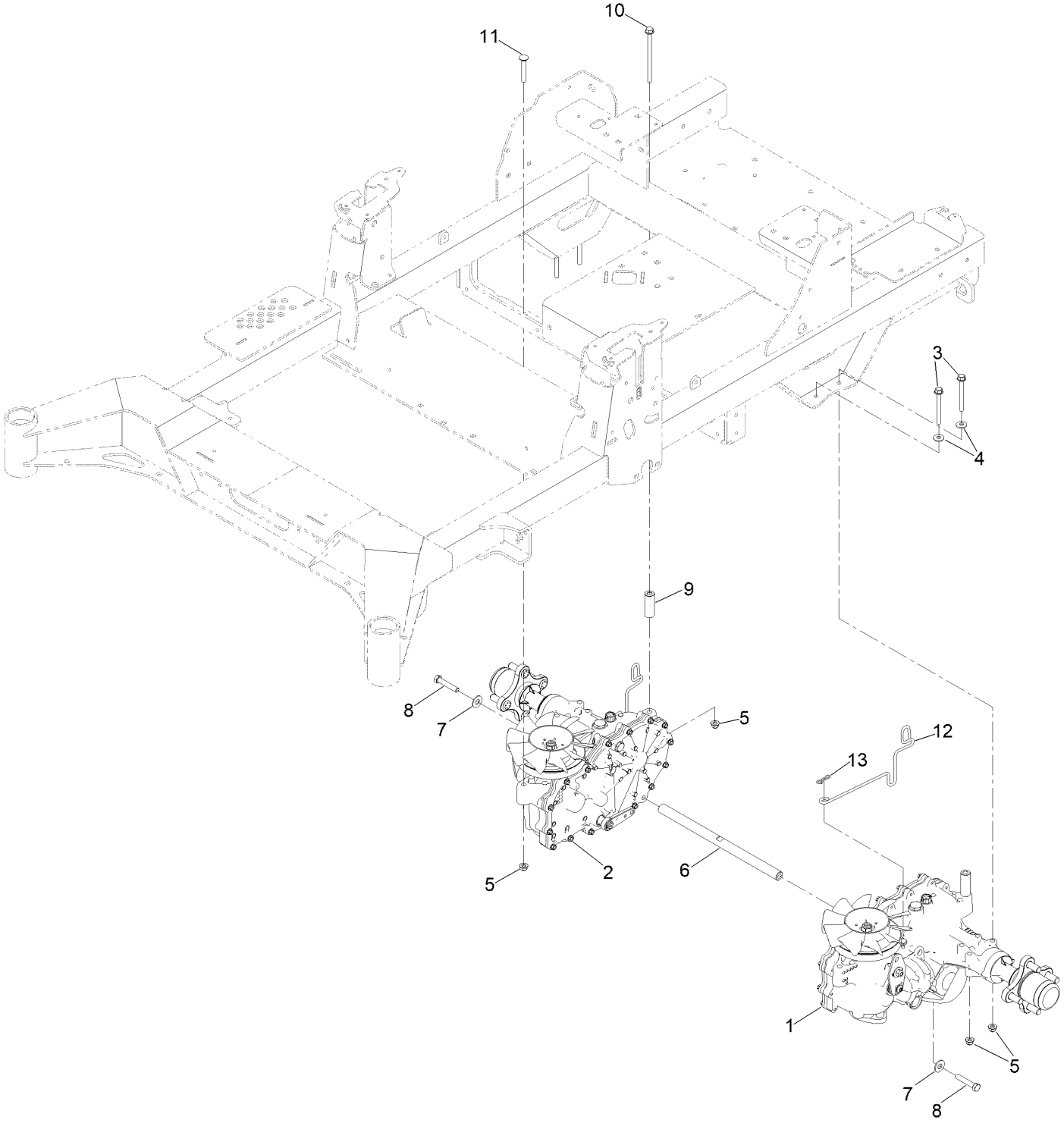

Hydro Drive Assembly (continued)

Ref.	Part Number	Qty.	Description
1	145-8424	1	Transaxle ASM
2	145-8425	1	Transaxle ASM
3	126-4687	4	Screw-HHF
4	1-303334	4	Washer-Spring
5	104-8300	8	Nut-HF, NI
6	145-5708	1	Shaft-Spacer
7	3256-4	2	Washer-Flat
8	94-7972	2	Screw-HH W/Loctite
9	109-3652	2	Spacer
10	126-5896	2	Screw HHF
11	3230-7	2	Bolt-CARR
12	125-8950	2	Rod-Bypass
13	119-1415	2	Pin-Cotter, Locking

LH Transaxle Assembly No. 145-8424

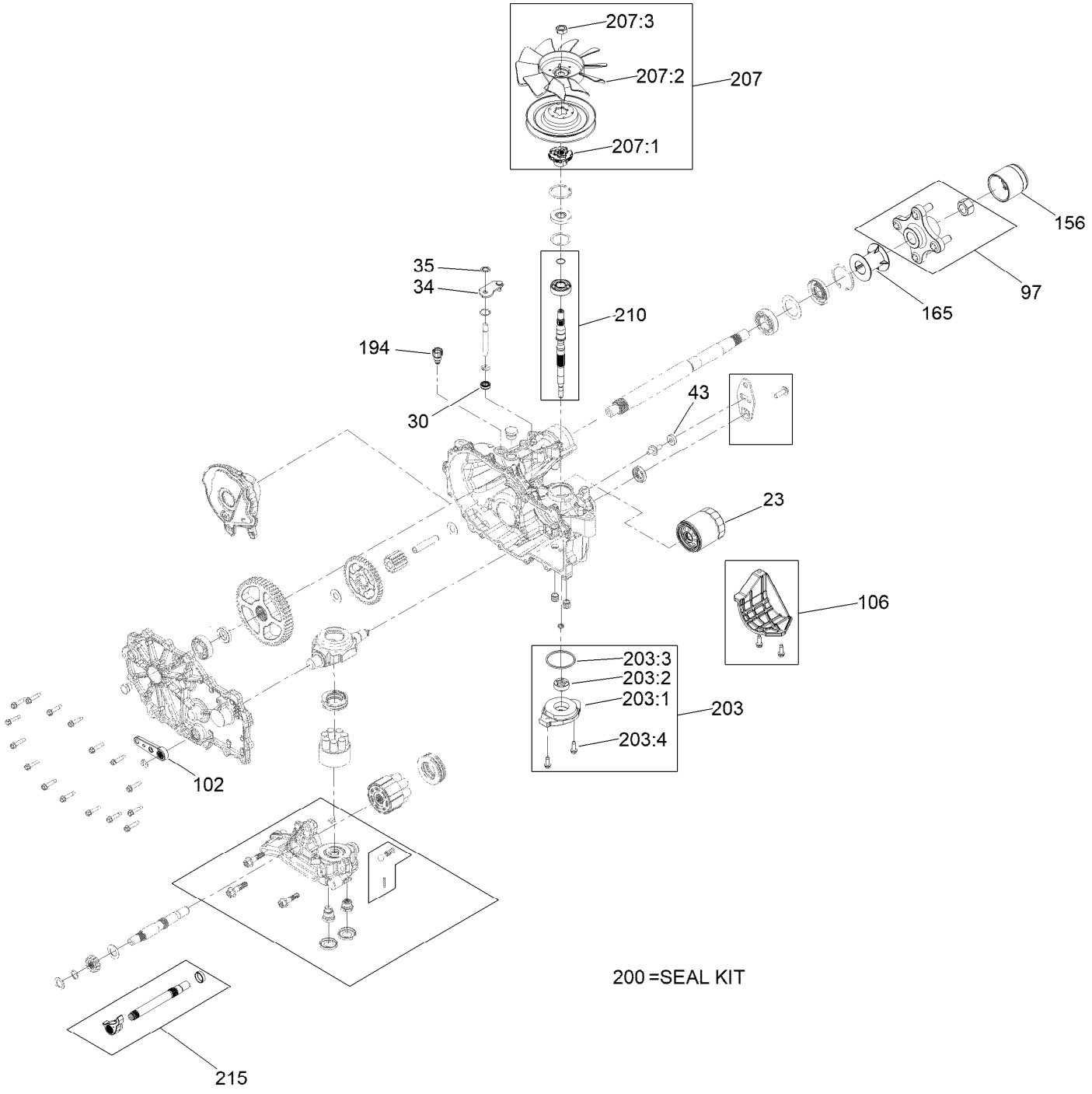

LH Transaxle Assembly No. 145-8424 (continued)

Ref.	Part Number	Qty.	Description
23	109-3321	1	Element-Oil Filter, HYD
30	139-7497	1	Seal-Lip
34	107-2490	1	Arm-Bypass
35	106-8681	1	Ring-Retaining, External
43	112-9853	1	Puck-Friction
97	116-3872	1	Hub-Offset
102	125-0021	1	Handle-Brake
106	120-7979	1	Guard-Filter, LH
156	116-6214	1	Cap-Axle, Long
165	116-6213	1	Tube-Axle
194	147-7366	1	Assembly-Fitting, Breather
200	121-3243	1	Seal Kit

Ref.	Part Number	Qty.	Description
203	114-8465	1	Charge Kit
203:1	114-8457	1	Cover-Charge Pump
203:2	104-2122	1	Gerotor ASM
203:3	109-3540	1	O Ring-Seal
203:4	104-2120	1	Screw
207	126-8904	1	Fan And Pulley Kit
207:1	126-8905	1	Hub-Fan
207:2	126-0226	1	Fan
207:3	116-9714	1	Nut-HJ
210	121-3248	1	Input Shaft Kit
215	140-8353	1	Inboard Kit

RH Transaxle Assembly No. 145-8425

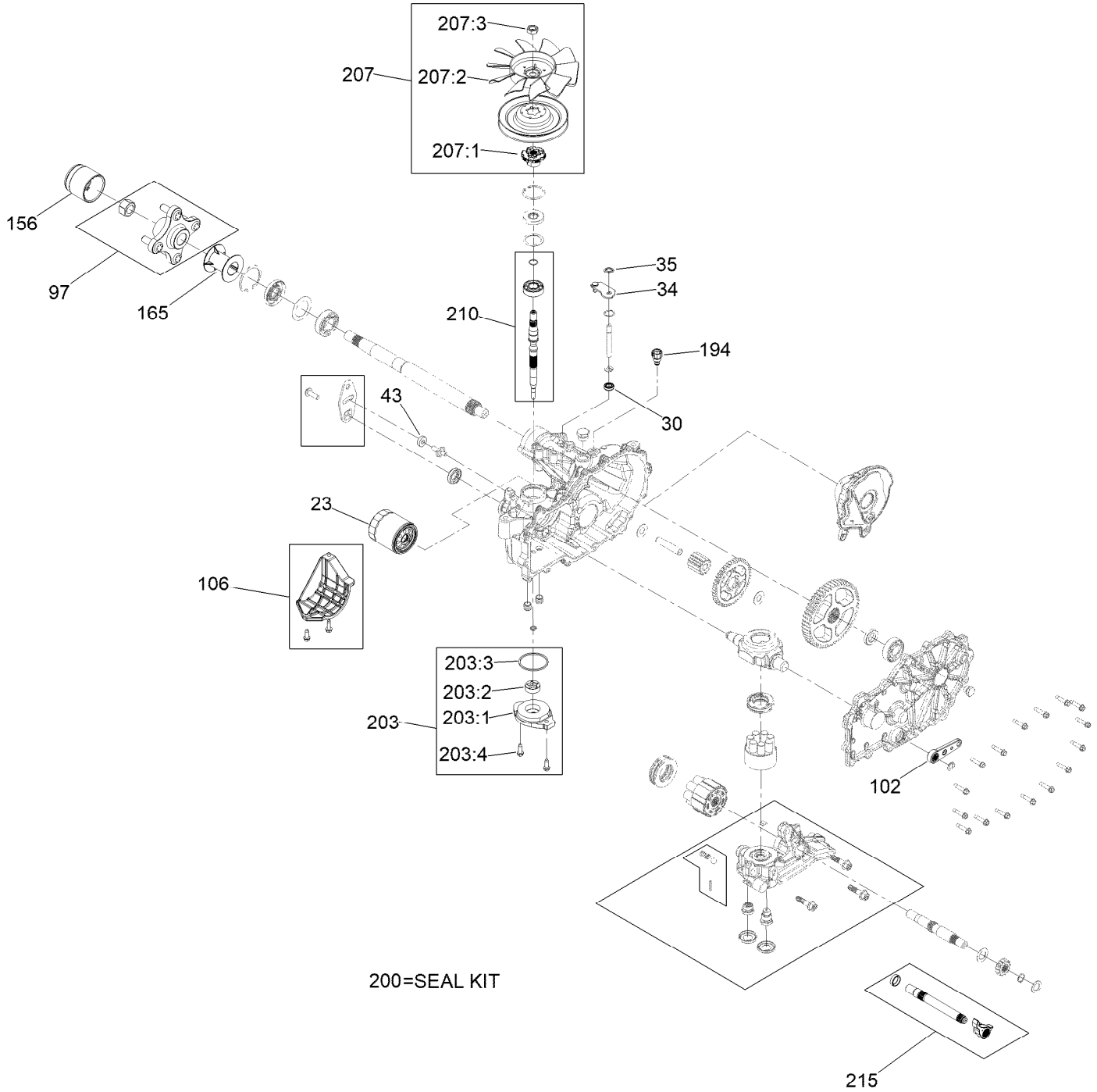

RH Transaxle Assembly No. 145-8425 (continued)

Ref.	Part Number	Qty.	Description
23	109-3321	1	Element-Oil Filter, HYD
30	139-7497	1	Seal-Lip
34	107-2490	1	Arm-Bypass
35	106-8681	1	Ring-Retaining, External
43	112-9853	1	Puck-Friction
97	116-3872	1	Hub-Offset
102	125-0021	1	Handle-Brake
106	120-7981	1	Guard-Filter, RH
156	116-6214	1	Cap-Axle, Long
165	116-6213	1	Tube-Axle
194	147-7366	1	Assembly-Fitting, Breather
200	121-3243	1	Seal Kit

Ref.	Part Number	Qty.	Description
203	114-8465	1	Charge Kit
203:1	114-8457	1	Cover-Charge Pump
203:2	104-2122	1	Gerotor ASM
203:3	109-3540	1	O Ring-Seal
203:4	104-2120	1	Screw
207	126-8904	1	Fan And Pulley Kit
207:1	126-8905	1	Hub-Fan
207:2	126-0226	1	Fan
207:3	116-9714	1	Nut-HJ
210	121-3248	1	Input Shaft Kit
215	140-8353	1	Inboard Kit

Throttle, Choke and Guards Assembly

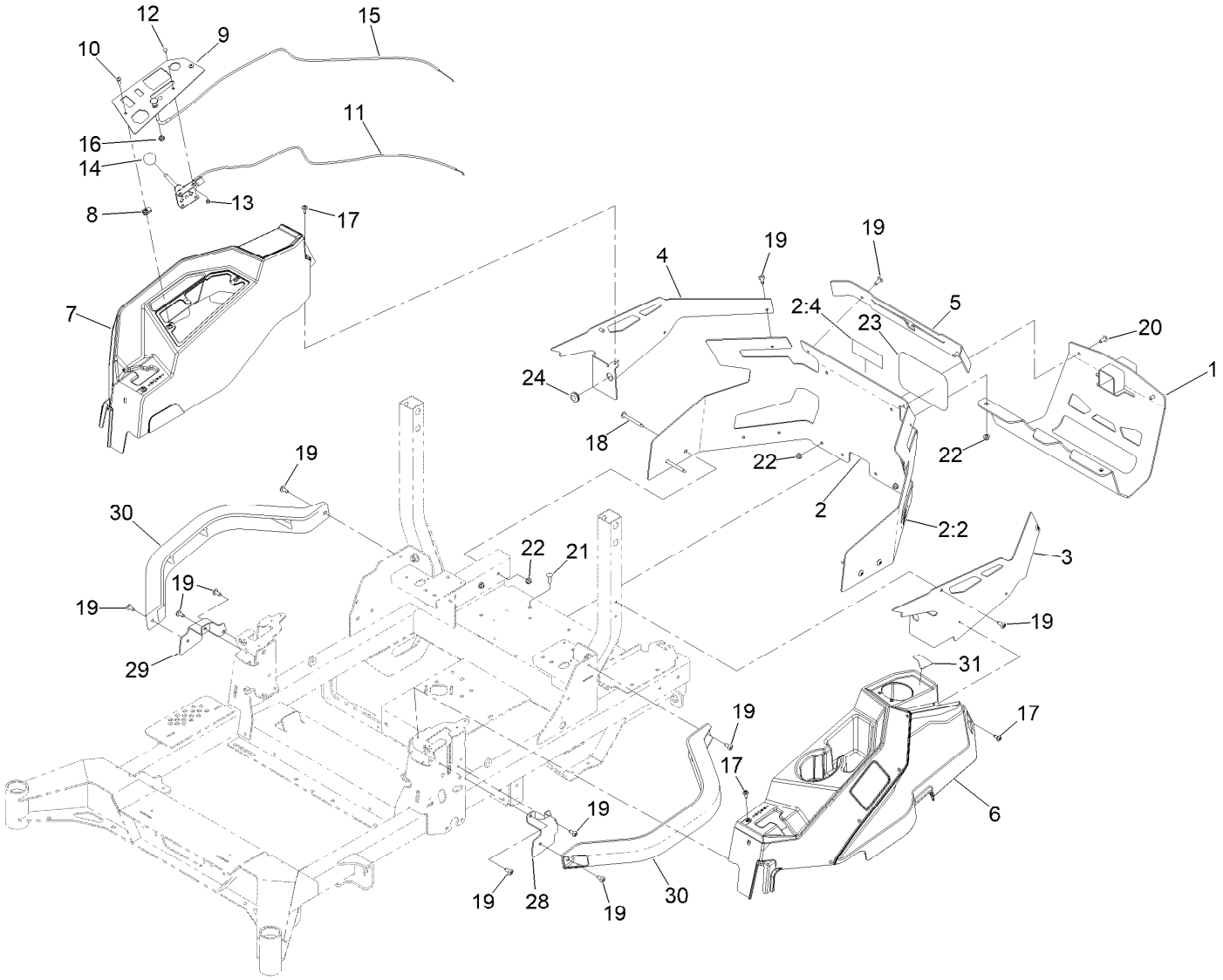

Throttle, Choke and Guards Assembly (continued)

Ref.	Part Number	Qty.	Description
1	147-2408-03	1	Guard-Muffler
2	145-7022	1	Rear Guard ASM
2:2	106-5517	2	Decal-Warning
2:4	147-7364	1	Decal-Hitch
3	145-8443-01	1	Guard-Rear, LH
4	145-8444-01	1	Guard-Rear, RH
5	145-7007-01	1	Guard-Rear, Top
6	147-2352	1	LH Pod ASM
7	147-2353	1	RH Pod ASM
8	107069	2	Clip
9	145-8498-03	1	Panel-Control
10	138-0689	2	Screw-PH
11	139-6734	1	Cable-Control, Throttle
12	1-807513	2	Bolt-CARR
13	3296-2	2	Nut-Lock, NI
14	1-603175	1	Knob-Ball
15	139-6735	1	Cable-Control, Choke
16	3220-3	1	Nut-HJ
17	120-7950	6	Screw-Torx
18	126-6267	4	Screw-TTH
19	138-9753	14	Screw
20	126-6268	2	Screw-TTH
21	3230-22	2	Screw-CARR
22	104-8300	8	Nut-HF, NI
23	67-7320	1	Decal
24	112-7069	1	Grommet
28	145-8481-01	1	Bracket-Mount, LH
29	145-8484-01	1	Bracket-Mount, RH
30	147-2385-01	2	Tube-Pod
31	147-2399	1	Decal-Fuel Fill

Fuel Assembly

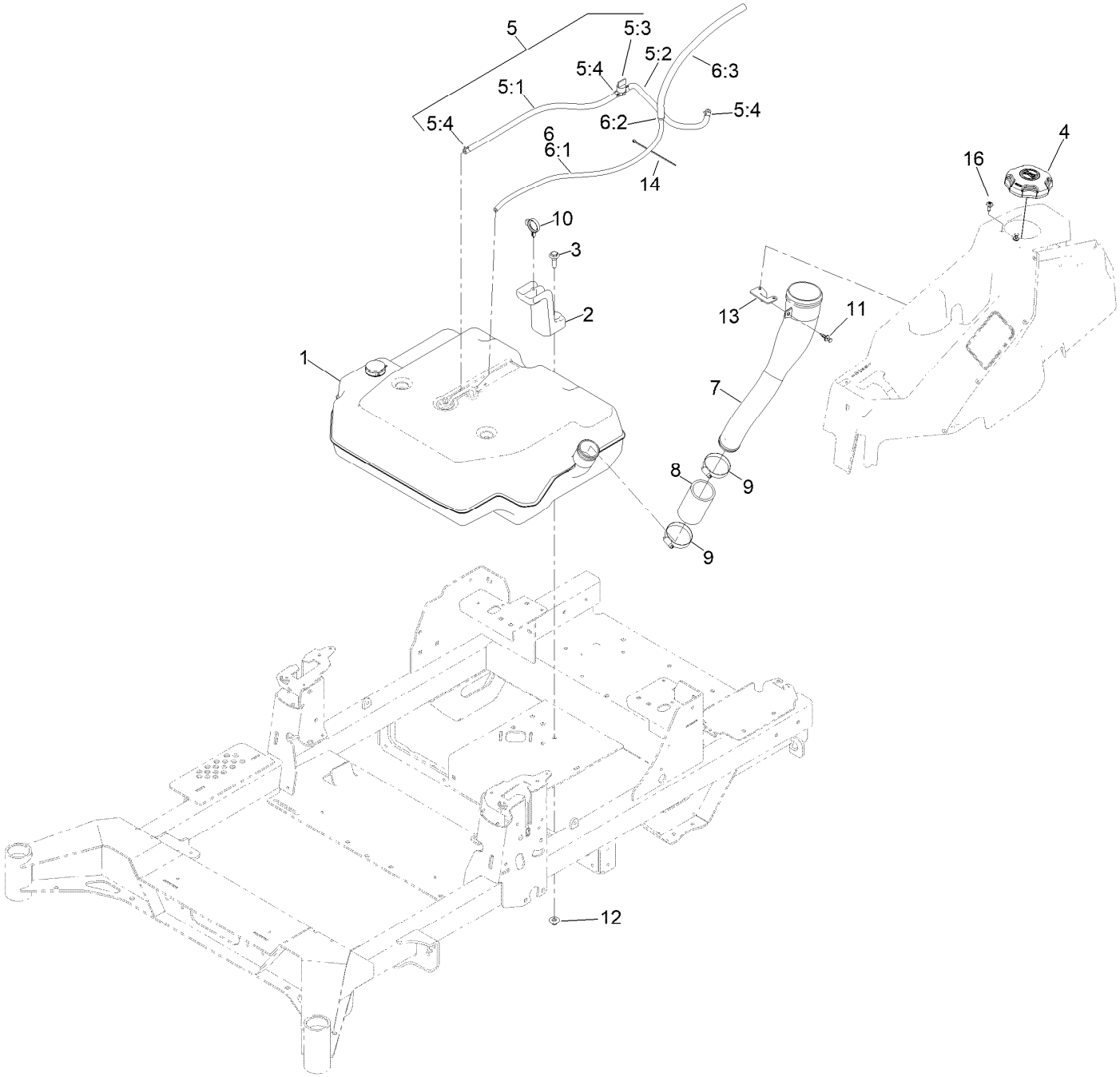

Fuel Assembly (continued)

Ref.	Part Number	Qty.	Description
1	147-2403	1	Tank ASM-Fuel
2	145-5778	1	Retainer-Tank, Rear
3	614672	1	Screw-Shoulder, HWH
4	137-4119	1	Cap-Fuel, Ratcheting
5	147-4649	1	Fuel Hose ASM
5:1	109-0301	1	Hose-Fuel
5:2	114-3766	1	Hose-Fuel
5:3	1-603770	1	Valve-Fuel
5:4	2412-98	4	Clamp-Hose
6	140-4957	1	ASM-Fuel Vent
6:1	138-3152	1	Hose-Fuel
6:2	116-4630	1	Fitting-Orifice, Straight
6:3	116-4344	1	Hose-Fuel
7	147-7350	1	Neck-Filler, Fuel
8	145-4698	1	Hose-Filler, Fuel
9	2412-130	2	Clamp-Hose
10	104-2490	1	Clamp-Hose
11	125-9622	1	Rivet-Blind
12	104-8301	1	Nut-HF, NI
13	161-2890	1	Bracket-Mounting, Fill
14	32180-082	1	Clip-Edge W/Tie, Perpendicular
16	120-7950	2	Screw-Torx

Fuel Tank Assembly No. 147-2403

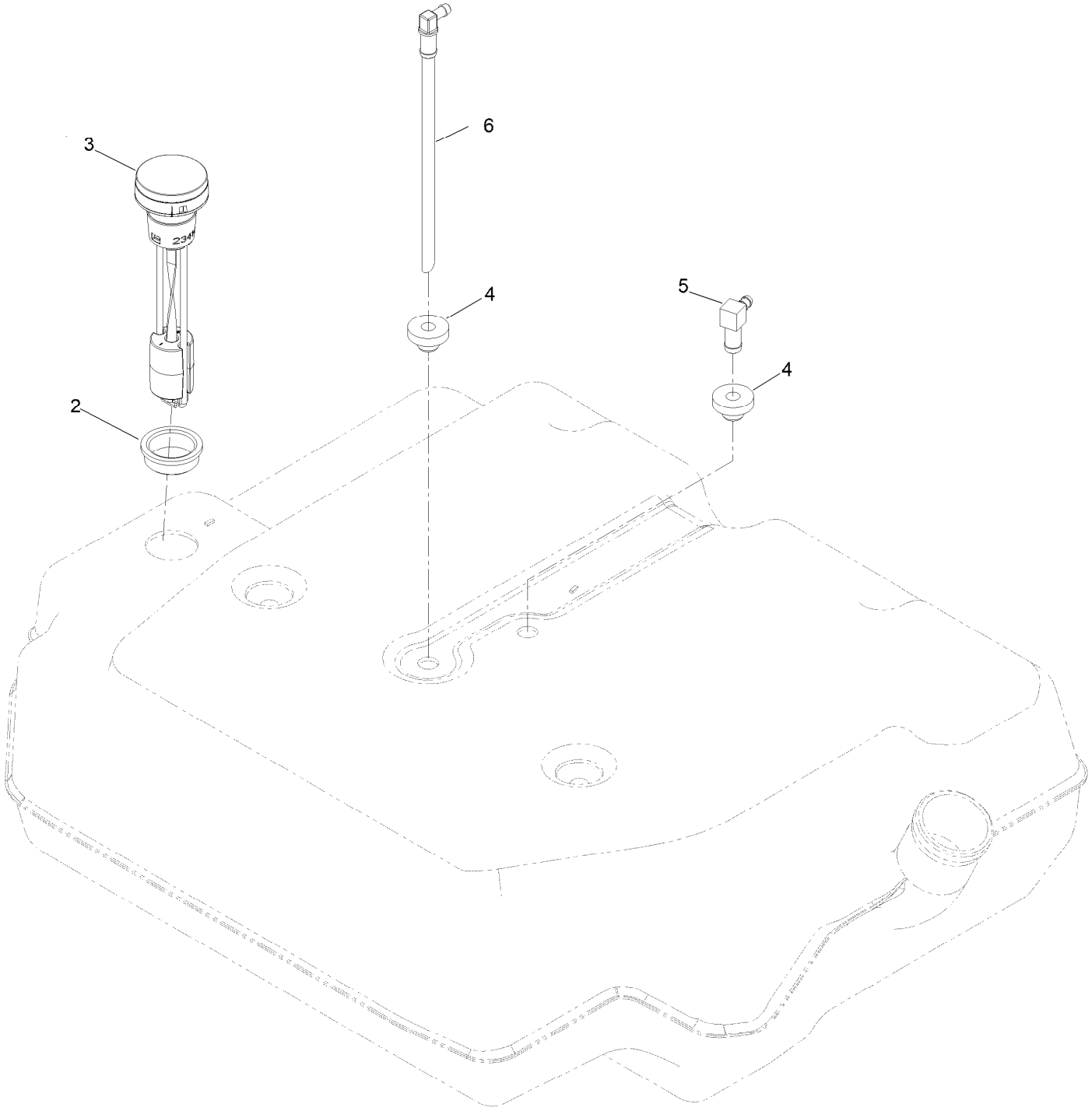

Fuel Tank Assembly No. 147-2403 (continued)

Ref.	Part Number	Qty.	Description
2	133-9269	1	Grommet-Fuel
3	139-8058	1	Gauge-Fuel
4	46-6560	2	Bushing
5	126-9057	1	Fitting-90 DEG
6	140-4955	1	Connector Elbow-90 DEG

Seat Mount Assembly

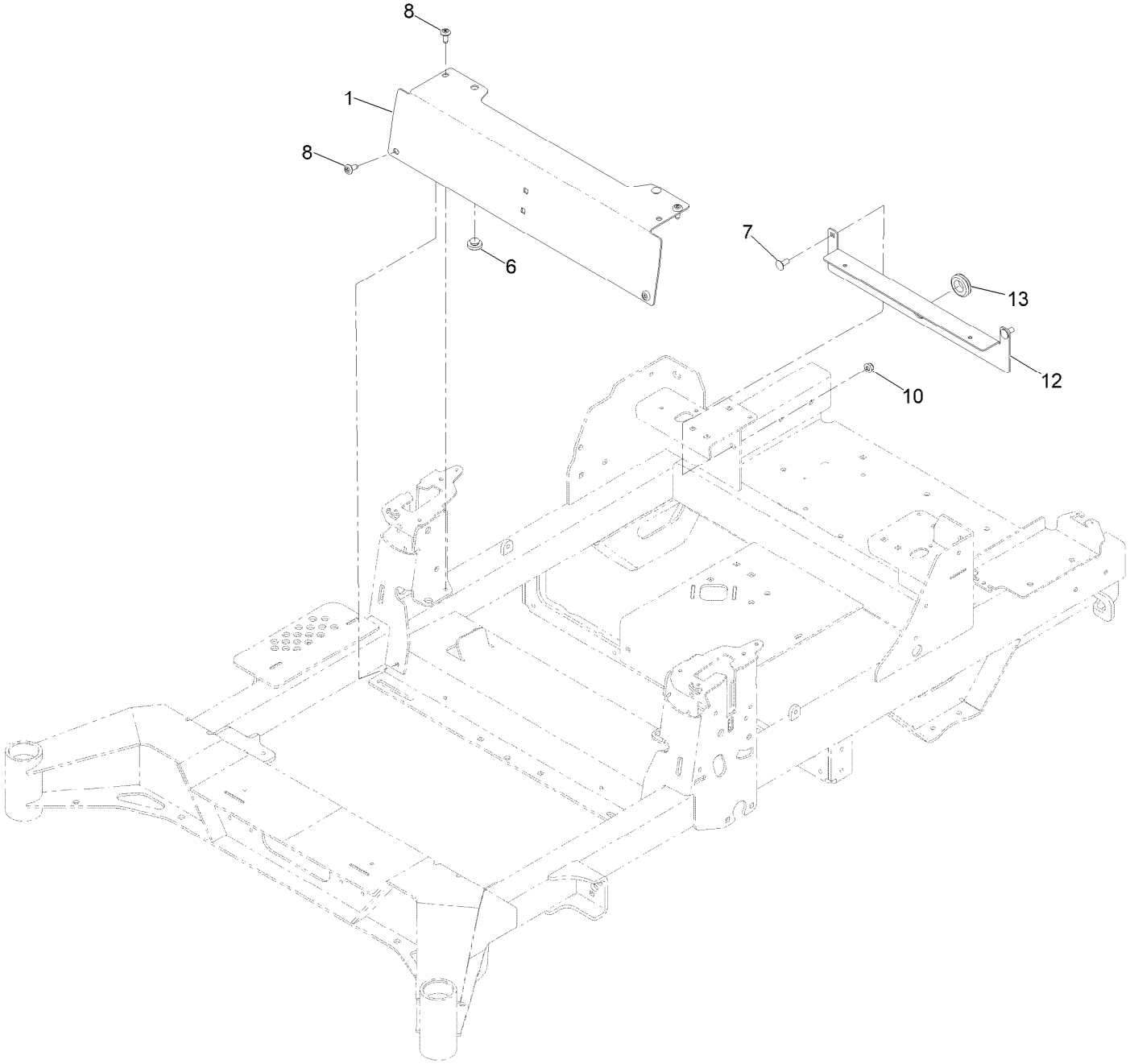

Seat Mount Assembly (continued)

Ref.	Part Number	Qty.	Description
1	147-2398-03	1	Plate-Badge, Front [black]
6	135-0505	2	Bumper-Seat
7	3230-23	2	Bolt-CARR
8	138-9753	4	Screw
10	104-8300	2	Nut-HF, NI
12	147-2362-03	1	Bracket-Firewall
13	1-543286	1	Grommet

Motion Control Assembly

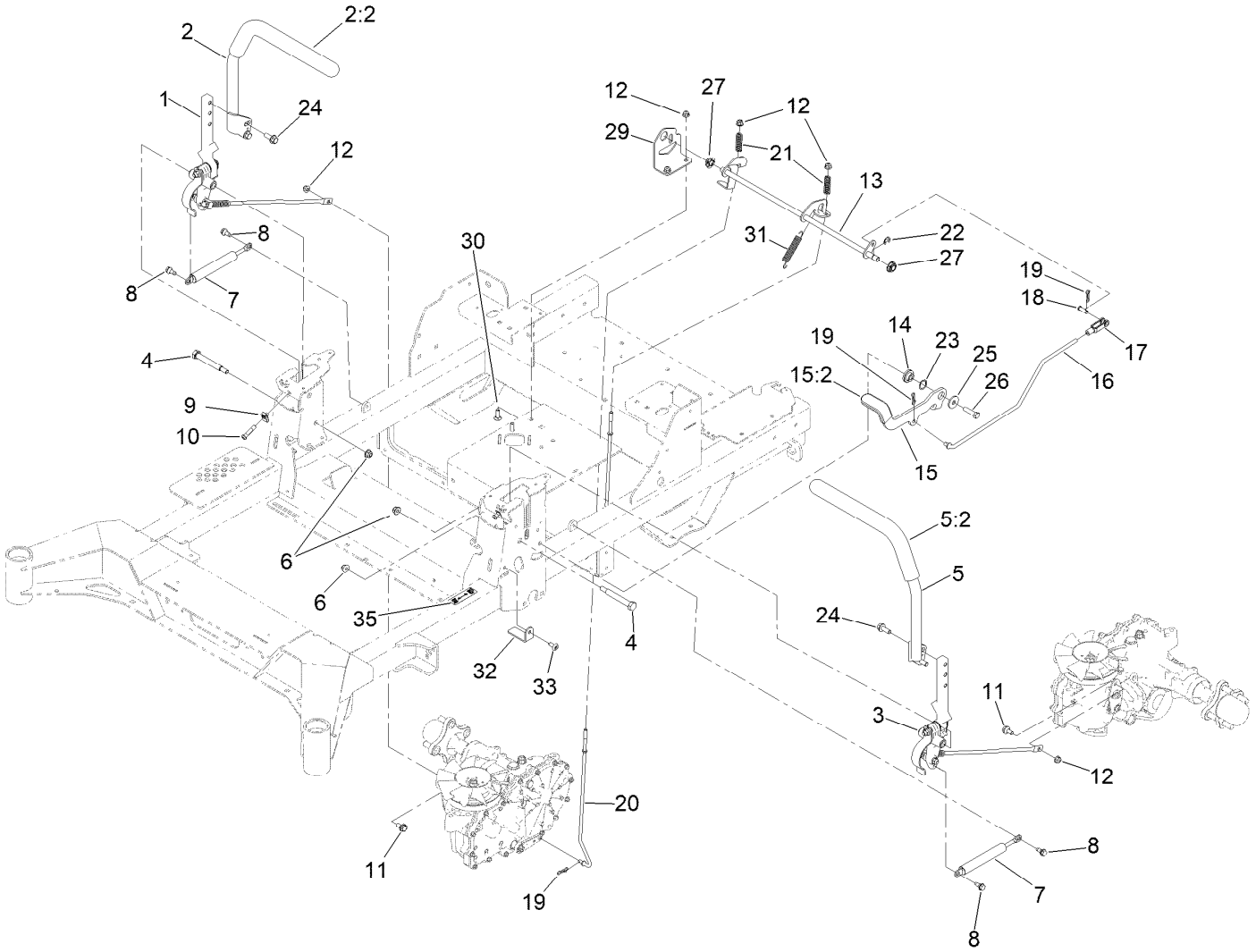

Motion Control Assembly (continued)

Ref.	Part Number	Qty.	Description
1	145-5725	1	Motion Control ASM-RH
2	147-2390	1	Handle ASM - RH
2:2	109-5668	1	Grip-Lever, Control
3	145-5724	1	Motion Control ASM-LH
4	115-5099	2	Bolt-Pivot
5	147-2391	1	Handle ASM - LH
5:2	109-5668	1	Grip-Lever, Control
6	104-8301	3	Nut-HF, NI
7	142-6851	2	Damper
8	126-4424	4	Screw-Shoulder
9	112-3306	2	Nut
10	126-4299	2	Screw-HSBH
11	37-8771	2	Bolt-Shoulder, HF
12	104-8300	6	Nut-HF, NI
13	145-5719	1	Shaft-Brake
14	126-5989	1	Pivot-Flange
15	147-7375	1	Lever-Brake
15:2	132-4749	1	Grip-Lever

Ref.	Part Number	Qty.	Description
16	145-5722	1	Linkage-Brake, Upper
17	1-303105	1	Yoke-Adjustable
18	1-808280	1	Pin-Clevis
19	119-1415	4	Pin-Cotter, Locking
20	126-7217	2	Linkage-Brake, Lower
21	109-7694	2	Spring-Compression
22	32120-47	1	Ring-Retaining, External
23	119-4164	1	Washer-Wave
24	110-5052	4	Screw-HHF
25	2844	1	Washer
26	323-8	1	Screw-HH
27	126-5820	2	Bearing-Spherical
29	145-5726	1	Bracket-Brake
30	3230-22	2	Screw-CARR
31	109-7124	1	Spring-Extension
32	145-3685	2	Plate-Stop, Rtn
33	138-9753	2	Screw
35	115-9625	1	Decal-Brake, Parking

Left and Right Motion Control Assembly

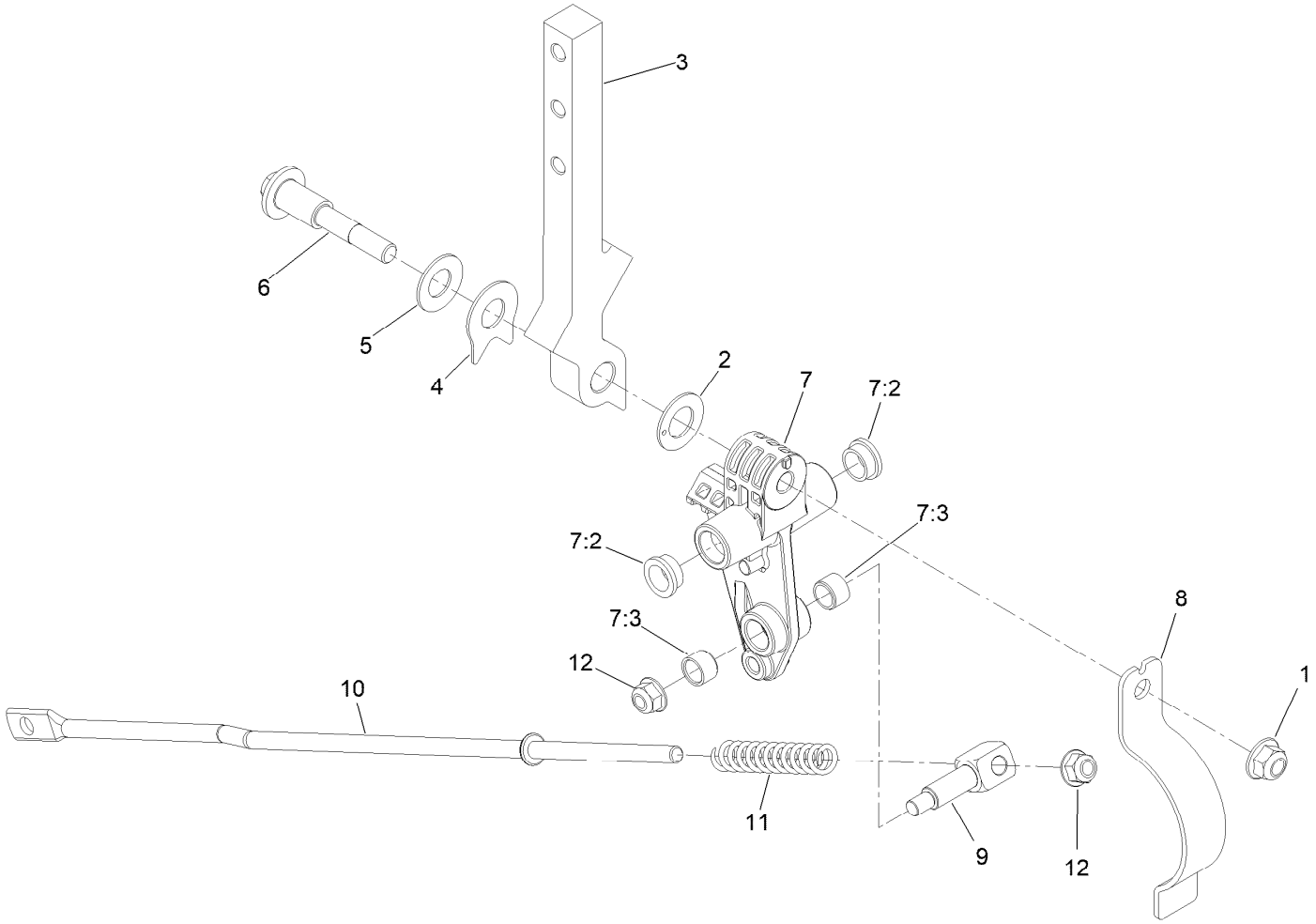

Left and Right Motion Control Assembly (continued)

Ref.	Part Number	Qty.	Description
1	104-8301	1	Nut-HF, NI
2	126-7296	1	Washer-Friction
3	147-2389	1	Arm-Control
4	142-8478	1	Spacer, Anti-Rotation
5	119-8925	1	Washer-Belleville
6	117-1198	1	Bolt-Pivot
7	145-5798	1	ASM-Control Arm

Ref.	Part Number	Qty.	Description
7:2	126-8909	2	Bushing
7:3	1-413152	2	Bushing-Sleeve
8	145-5799	1	Spring-Rtn
9	126-5434	1	Swivel
10	145-5723	1	Link-Control
11	126-8195	1	Spring-Return, Neutral
12	104-8300	2	Nut-HF, NI

Front Caster Wheel Assembly

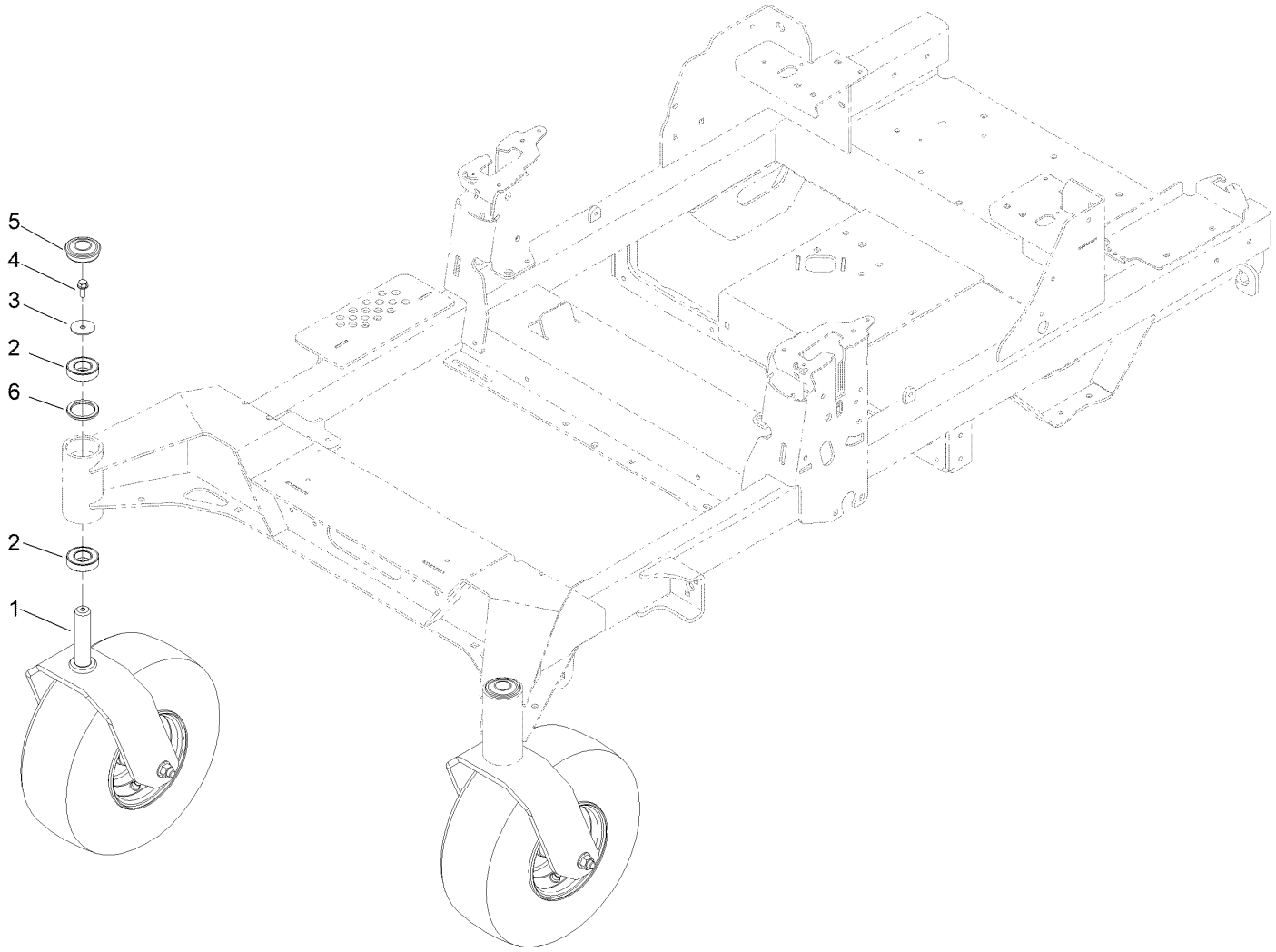

Front Caster Wheel Assembly (continued)

Ref.	Part Number	Qty.	Description
1		2	ASM, Front Caster W/ Fork ●
2	109-3678	4	Bearing-Ball
3	3256-68	2	Washer-Flat
4	100-1668	2	Screw-HHF
5	144-0375	2	Cap, Grease
6	145-3660	2	Spacer-Bearing

● Not serviced separately

Fork and Caster Assembly

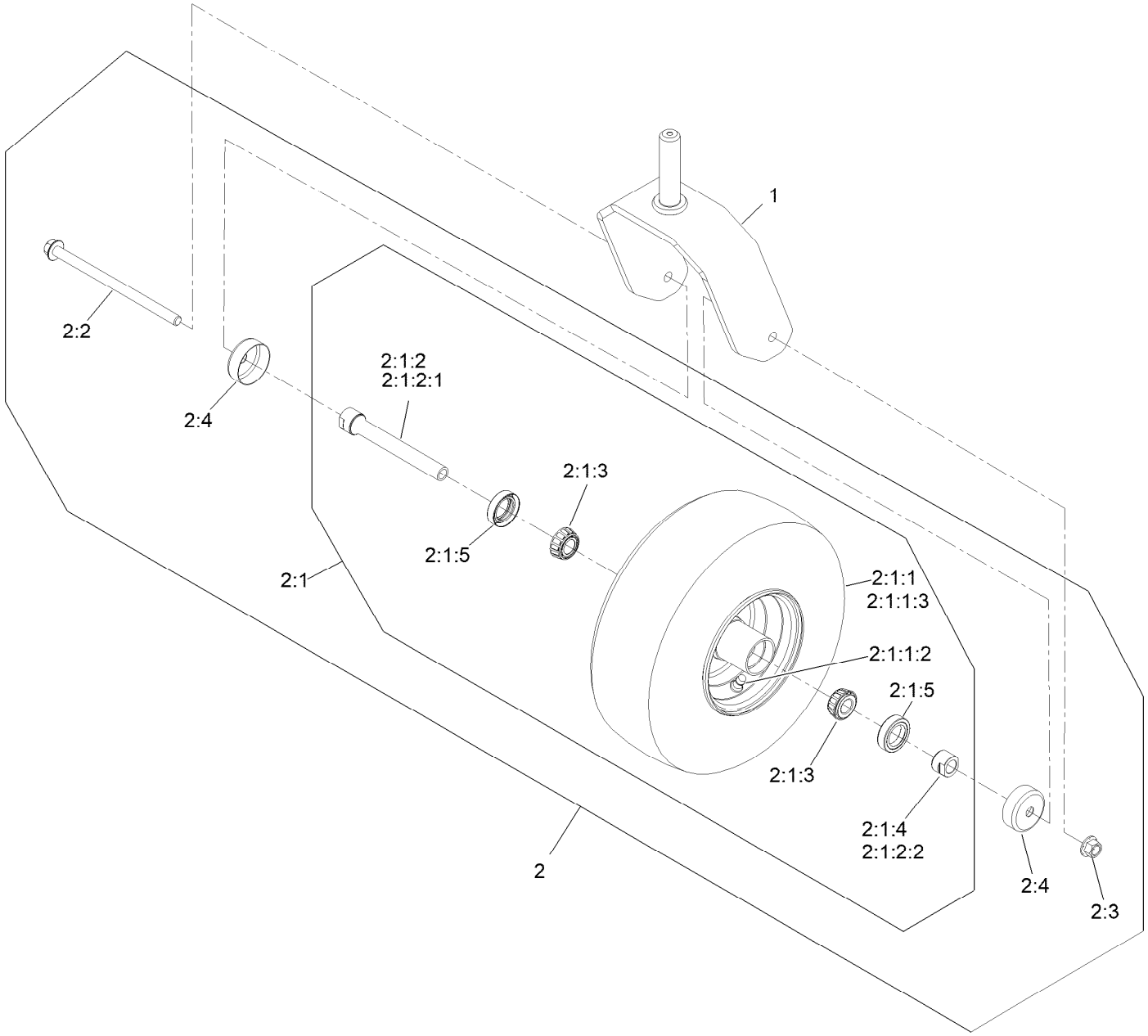

Fork and Caster Assembly (continued)

Ref.	Part Number	Qty.	Description
1	142-7827-01	1	Fork-Caster
2	139-3639	1	ASM-Pneumatic 13X6.50-6
2:1		1	Wheel And Bearings ASM ●
2:1:1		1	Wheel And Tire ASM 13X6.5-6 ●
2:1:1:2	5108	1	Valve
2:1:1:3	126-5959	1	Tire
2:1:2	126-7796	1	Caster Axle ASM
2:1:2:1	126-5220	1	Axle-Caster
2:1:2:2	103-3051	1	Spacer-Nut
2:1:3	1-633585	2	Bearing-Cone, Taper
2:1:4	103-3051	1	Spacer-Nut
2:1:5	103-0063	2	Seal-Caster
2:2	126-5389	1	Screw-HHF
2:3	99-5107	1	Nut-Lock
2:4	103-2768	2	Guard-Seal

● Not serviced separately

Rear Drive Wheel Assembly

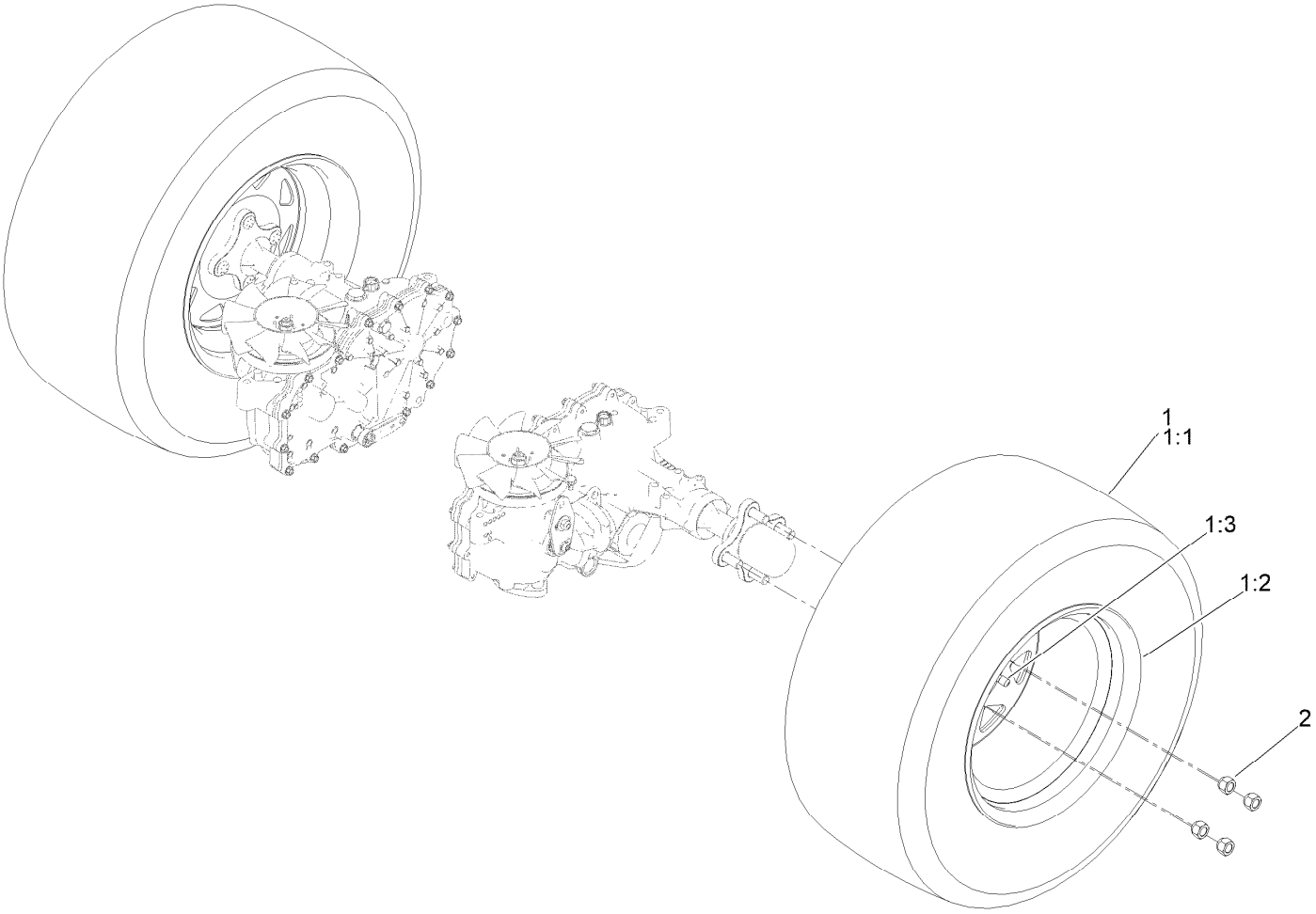

Rear Drive Wheel Assembly (continued)

Ref.	Part Number	Qty.	Description
1	147-5031	2	ASM-Voodoo Trac 24X12-12
1:1	147-5034	1	Tire-Voodoo 24X12-12
1:2	144-6606	1	Wheel
1:3	232-27	1	Stem-Valve
2	242-50	8	Nut-Lug

Electrical Assembly

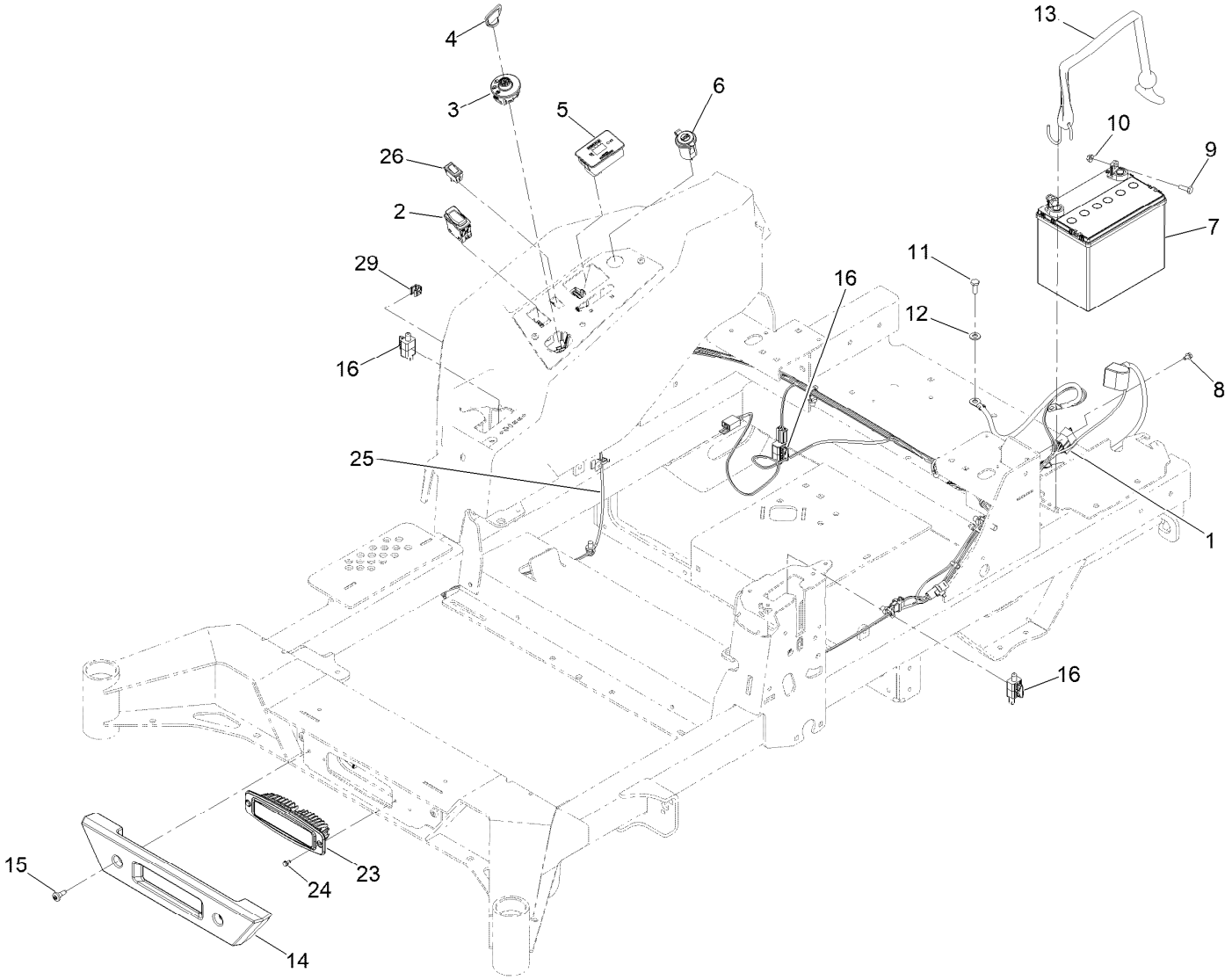

Electrical Assembly (continued)

Ref.	Part Number	Qty.	Description
1	147-2363	1	Harness-Wire, Zmaster
2	139-6368	1	Switch-Rocker, On-None-On
3	137-4100	1	Switch-Ignition
4	63-8360	1	Key-Ignition
5	116-5609	1	Module ASM
6	140-7955	1	Port-Power, USB
7	104-8162	1	Battery
8	99-8445	1	Screw-HWH
9	321-4	2	Screw-HH
10	32128-33	2	Nut-HF
11	33114-020	1	Screw-HH
12	33094-00	1	Washer-Plain
13	142-8697	1	Strap, Bungee
14	140-4993	1	Bumper-Front
15	135-2015	2	Screw-Shoulder
16	110-6765	3	Switch
23	139-8089	1	Mount-Flush, Light
24	104-2065	2	Screw-HWH
25	140-1213	1	Harness-Wire, Light Kit
26	92-8875	1	Switch-Rocker
29	32180-082	1	Clip-Edge W/Tie, Perpendicular
99	1-603511	1	Keys-Ignition (Spare Pair) ■ ●

● Not illustrated

■ Optional Equipment

Wire Harness Assembly No. 147-2363

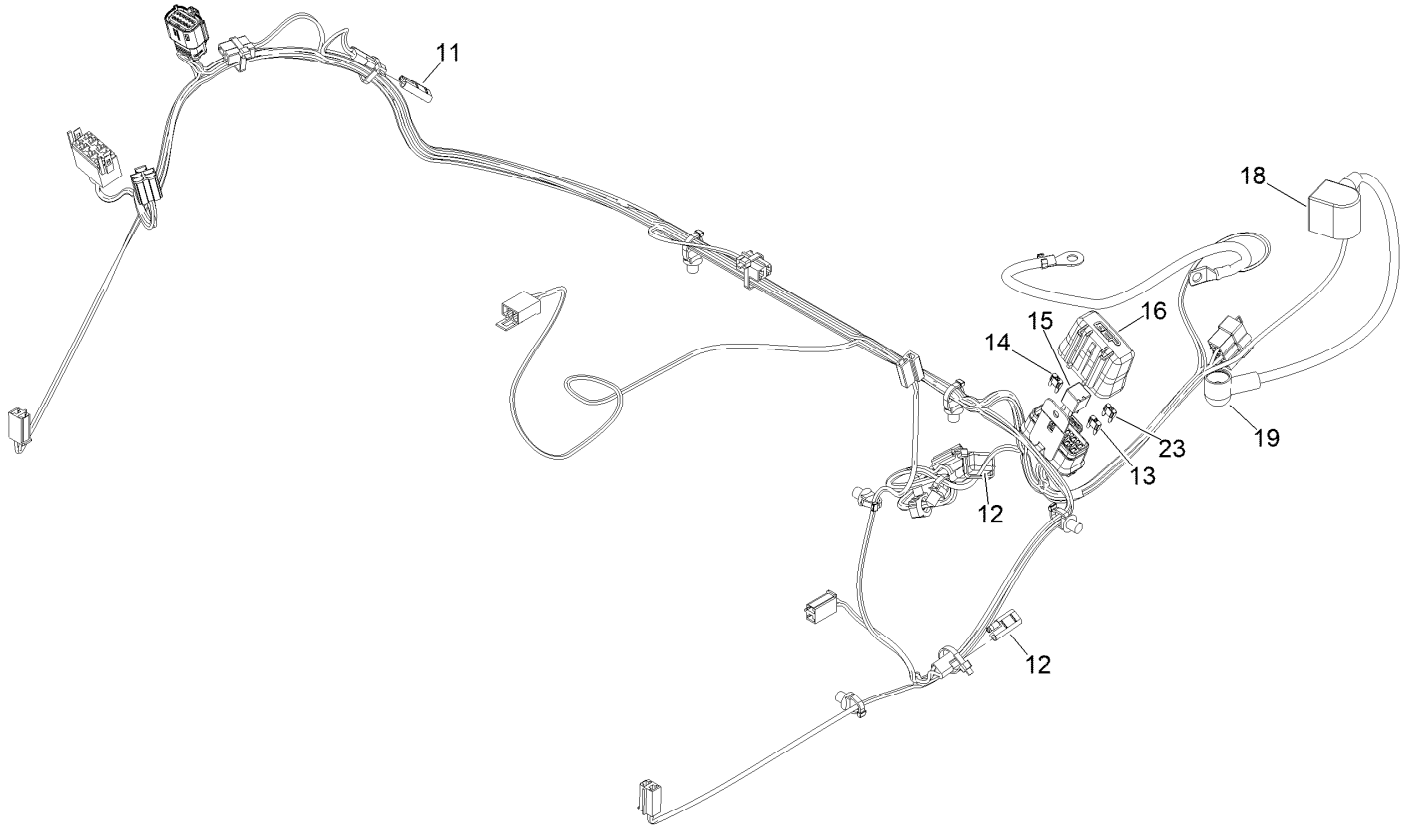

Wire Harness Assembly No. 147-2363 (continued)

Ref.	Part Number	Qty.	Description
11	116-0053	3	Cap-Plug
12	103-3895	1	Diode
13	121-8867	1	Fuse-Mini Blade, 15 Amp
14	121-8868	1	Fuse-Mini Blade, 20 Amp
15	126-3991	1	Relay-Micro
16	32180-176	1	Cover-Block, Fuse
18	126-8876	1	Insulator-Battery
19	1-543393	1	Insulator-Solenoid
23	121-8869	1	Fuse-Mini Blade, 25 Amp

Deck Lift Assembly

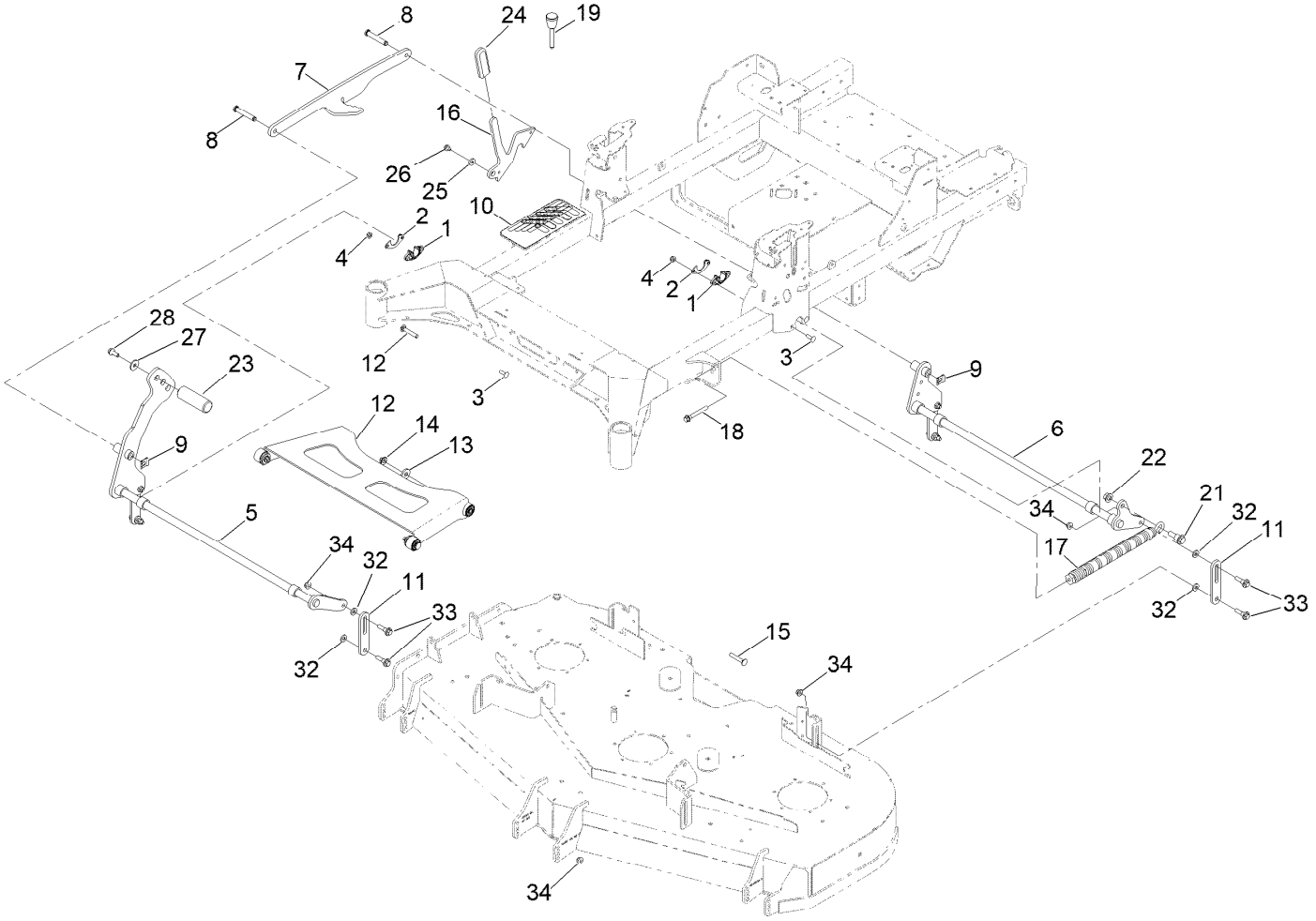

Deck Lift Assembly (continued)

Ref.	Part Number	Qty.	Description
1	139-5872	4	Bearing-Flange
2	116-2887	4	Gusset-Lift, Deck
3	3230-22	8	Screw-CARR
4	104-8300	8	Nut-HF, NI
5	147-7389-03	1	Shaft-Lift, Deck
6	140-4975-03	1	Shaft-Lift, Deck
7	126-4639-03	1	Link-HOC
8	126-9181	2	Pin-Clevis
9	138-8491	2	Clip-Pin
10	147-2360	1	Decal-HOC
11	145-5702-03	4	Link-Lift, Deck
12	140-1179	1	Deck Strut W/ Bushings ASM
13	1-373034	2	Washer
14	109-6658	2	Nut-Flange, NI
15	3231-7	2	Screw-CARR
16	145-8475-03	1	Plate-Transport Lock
17	116-0886	1	Spring-Extension
18	92-7674	1	Bolt-Shoulder
19	126-5401	1	Pin-HOC
21	116-0780	1	Screw-Shoulder, HHF
22	99-5107	1	Nut-Lock
23	140-4959	1	Pedal-Foot Lift
24	132-4749	1	Grip-Lever
25	104-7658	1	Spacer
26	9266934	1	Screw
27	2844	1	Washer
28	3234-42	1	Screw-HHF
32	43-0940	8	Spacer
33	130-0742	8	Bolt-Shoulder
34	104-8301	8	Nut-HF, NI

Deck Strut Assembly No. 140-1179

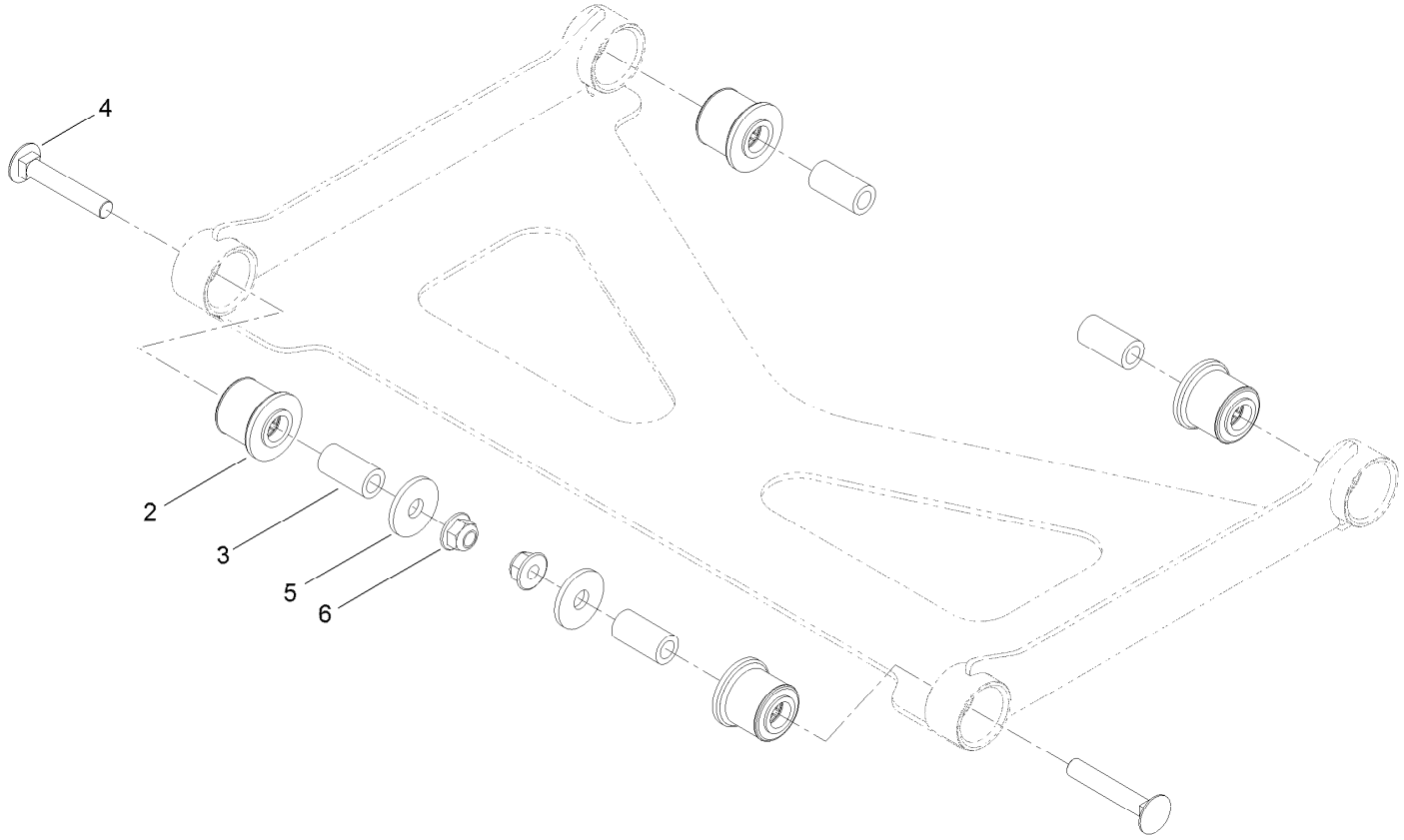

Deck Strut Assembly No. 140-1179 (continued)

Ref.	Part Number	Qty.	Description
2	126-8360	4	Bushing-Rubber, Suspension
3	108-6544	4	Spacer
4	3231-7	2	Screw-CARR
5	2844	2	Washer
6	104-8301	2	Nut-HF, NI

Engine, Clutch and Muffler Assembly

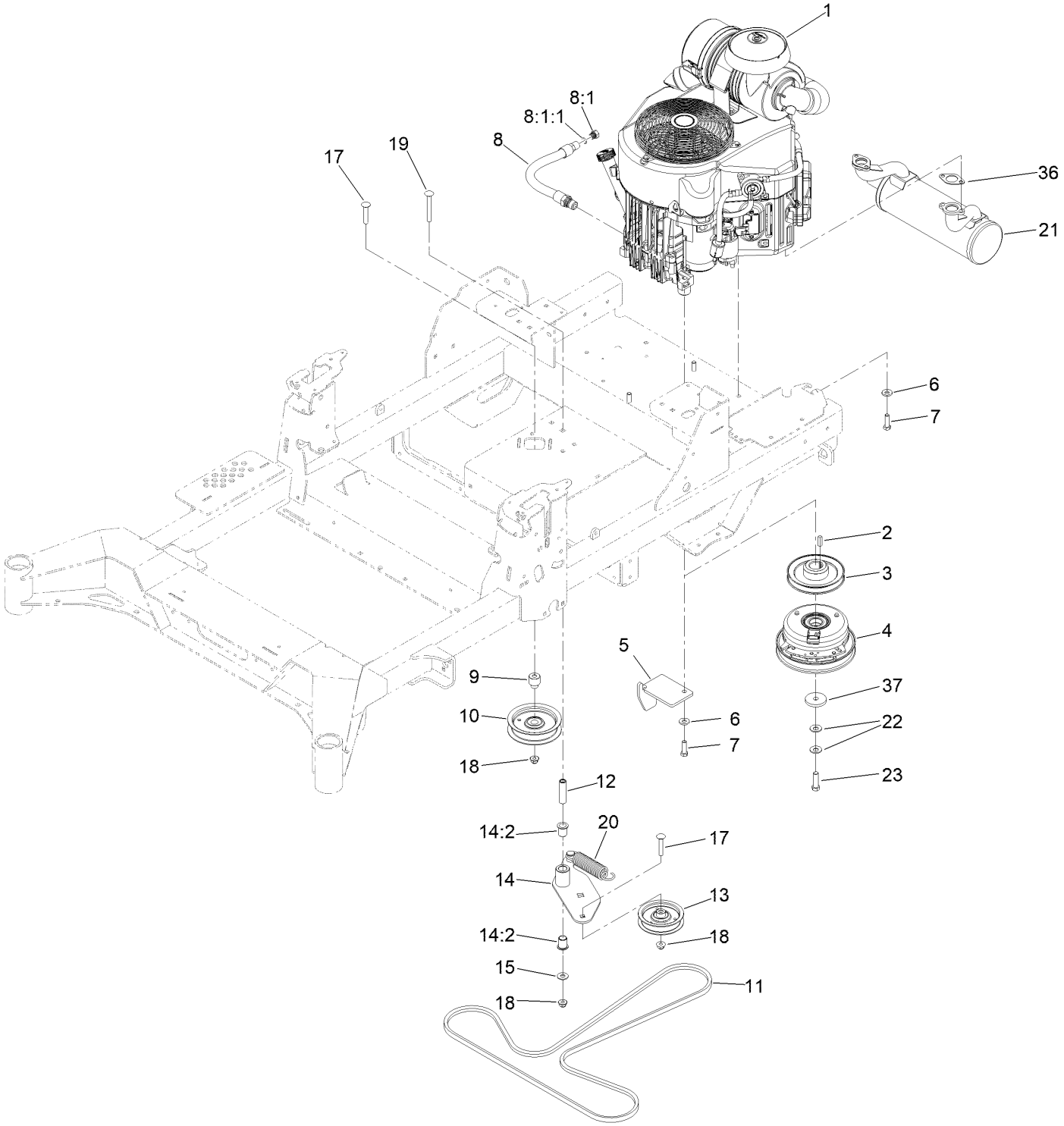

Engine, Clutch and Muffler Assembly (continued)

Ref.	Part Number	Qty.	Description
1		1	Engine-Kawasaki, Fx730V ▲◆
1:1		1	Kawasaki 49065-7007 Engine Oil Filter ●▲◆
1:2		1	Kawasaki 49019-7005 Fuel Filter ●▲◆
1:3		1	Kawasaki 11013-7045 Safety Filter ●▲◆
1:4		1	Kawasaki 11013-7044 Engine Air Filter ●▲◆
2	1-807259	1	Key
3	126-5358	1	Sheave (W/Hub)
4	147-2401	1	Clutch 6.75, 105 Ftlb, 1.125 Dd
5	140-1190	1	Anchor-Clutch
6	98-5975	4	Washer-Belleville
7	323-7	4	Screw-HH
8	116-4924	1	Engine Oil Drain Hose ASM
8:1	353-508	1	Plug-HH ■
8:1:1	237-42	1	O-Ring
9	126-7684	1	Bushing-Idler
10	132-4718	1	Pulley-Idler, Flat
11	145-5727	1	Belt-V
12	139-6690	1	Bushing, Idler Pivot
13	140-4964	1	Pulley-Idler, Flat
14	145-5731	1	Idler Arm ASM
14:2	138-2573	1	Bushing-Flange
15	3256-4	1	Washer-Flat
17	117-9971	2	Bolt-Carriage
18	104-8301	3	Nut-HF, NI
19	3231-42	1	Screw-CARR
20	138-7264	1	Spring-Extension
21	126-4360	1	Muffler
22	1-603610	2	Washer-Spring
23	109-9761	1	Screw-HH
36	1-653313	2	Gasket-Exhaust
37	109-6919	1	Washer-Plain

● Not illustrated
▲ Not serviced separately
■ Torque to 24-26 ft-lb
◆ Obtain parts from www.kawpower.com

Seat Suspension Assembly

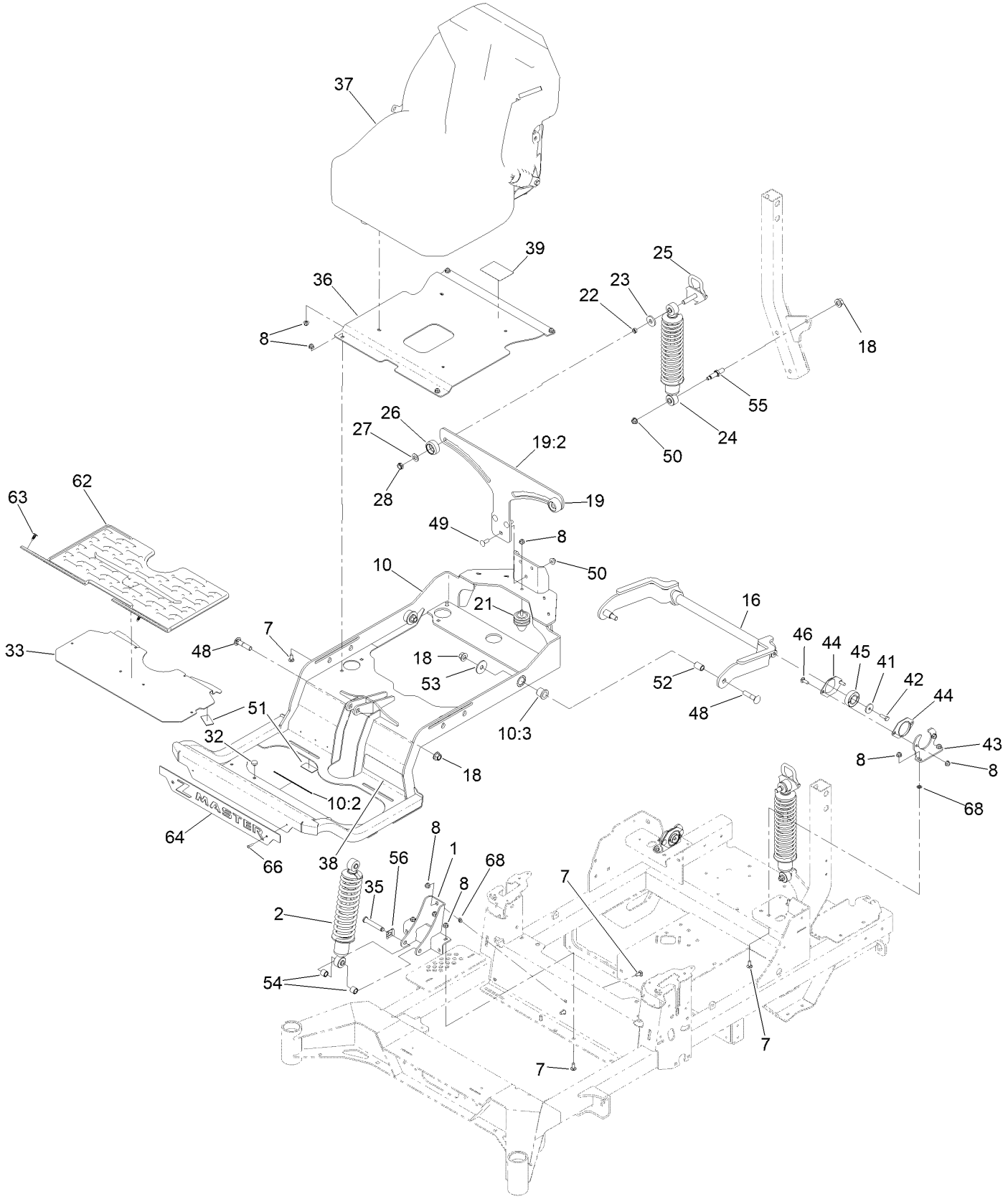

Seat Suspension Assembly (continued)

Ref.	Part Number	Qty.	Description
1	145-7036-03	1	Mount-Shock, Lower [black]
2	136-1719	1	Shock ASM-Front
7	3230-23	8	Bolt-CARR
8	104-8300	21	Nut-HF, NI
10	147-4978	1	Subframe ASM
10:2	132-0871	1	Decal-Danger
10:3	127-6745	2	Bushing-Flange
16	127-6754-03	1	Arm-Trailing
18	99-5107	5	Nut-Lock
19	144-2602	1	Bracket-Mounting
19:2	132-5067	1	Decal-Adjustment, Ride
21	126-5491	1	Isolator
22	133-5109	2	Bearing-Sleeve
23	131-4699	2	Washer-Plastic
24	133-1815	2	Shock/Spring ASM
25	136-9017	2	Cam Lock ASM
26	136-5636	2	Knob-Lock, Cam
27	3-6803	2	Washer-Adjusting
28	3296-45	2	Nut-Hex
32	1-513658	2	Bumper
33	144-0381-01	1	Floorpan
35	126-9181	1	Pin-Clevis
36	140-1197-03	1	Pan-Seat

Ref.	Part Number	Qty.	Description
37	147-2383	1	Seat ASM-Standard
38	144-0437	1	Decal-Myride
39	144-2669	1	Decal-Service Aid
41	105-3048	2	Washer-Flat
42	116-0648	2	Screw-HH, Thread Locking
43	127-6759-03	2	Bracket-Bearing
44	127-6743	4	Housing-Bearing, Flange
45	1-653346	2	Bearing
46	3230-10	8	Bolt-CARR
48	127-6768	3	Screw-CARR
49	3231-22	3	Screw-CARR
50	104-8301	5	Nut-HF, NI
51	130-0733	4	Pad-Rubber
52	127-6751	2	Spacer-Aluminum
53	86-1990	2	Washer-Thrust
54	140-4869	2	Spacer-Tube
55	133-4401	2	Bolt-Shoulder
56	138-8491	1	Clip-Pin
62	144-0355	1	Floormat-Myride
63	117-2382	2	Plug-Plastic
64	147-4956-03	1	Plate-Badge
66	130-8451	2	Rivet-Trifold
68	117-2749	6	Nut-Push

Seat Assembly No. 147-2383

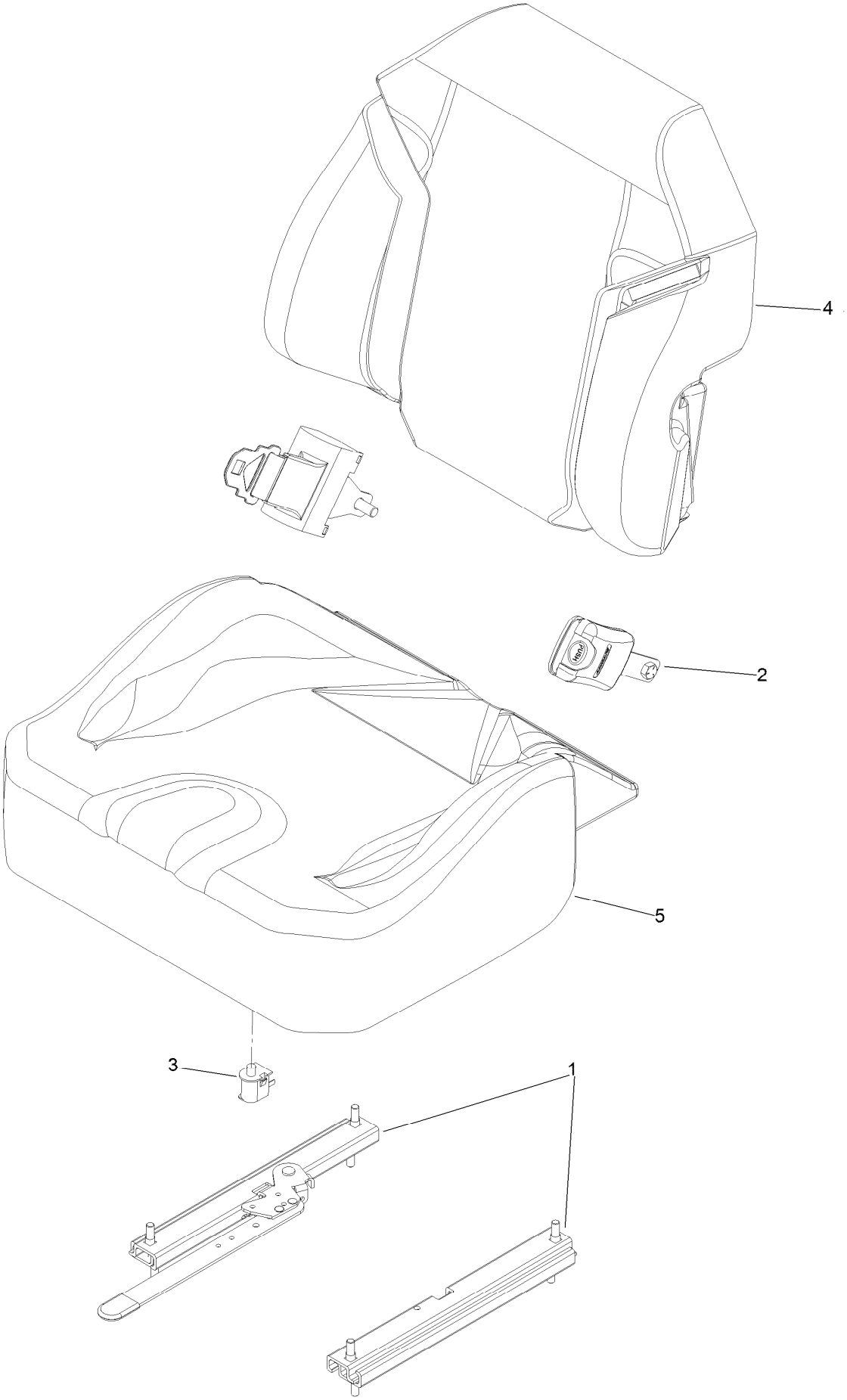

Seat Assembly No. 147-2383 (continued)

Ref.	Part Number	Qty.	Description
1	147-7883	1	Seat Track Kit
2	130-2854	1	Seat Belt Kit
3	82-2190	1	Switch-Bail
4	147-7367	1	Cover-Back, Seat
5	147-7369	1	Cover-Bottom, Seat

Decal Assembly

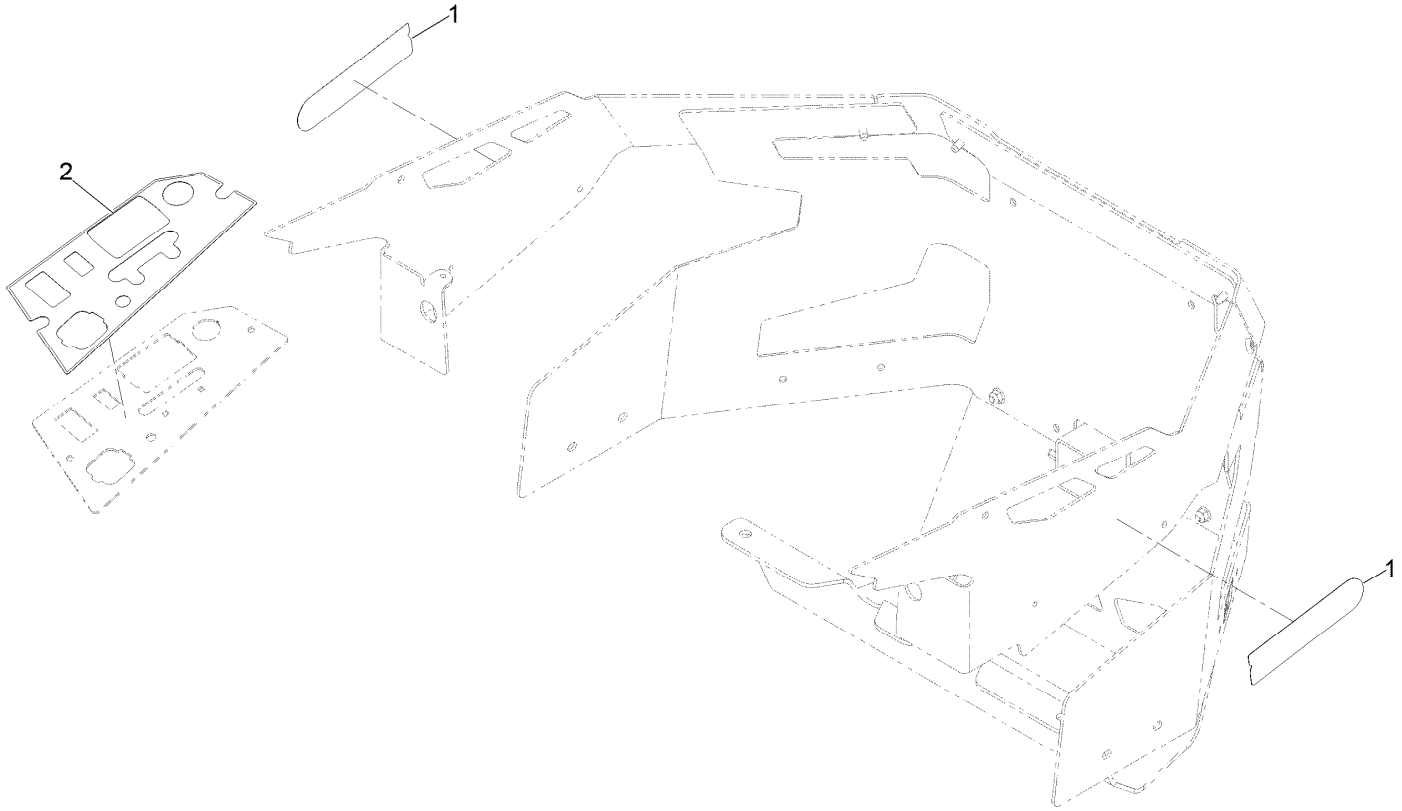

Decal Assembly (continued)

Ref.	Part Number	Qty.	Description
1	145-8407	2	Decal-2000 Series
2	147-4953	1	Decal-Panel, Control

Deck Assembly

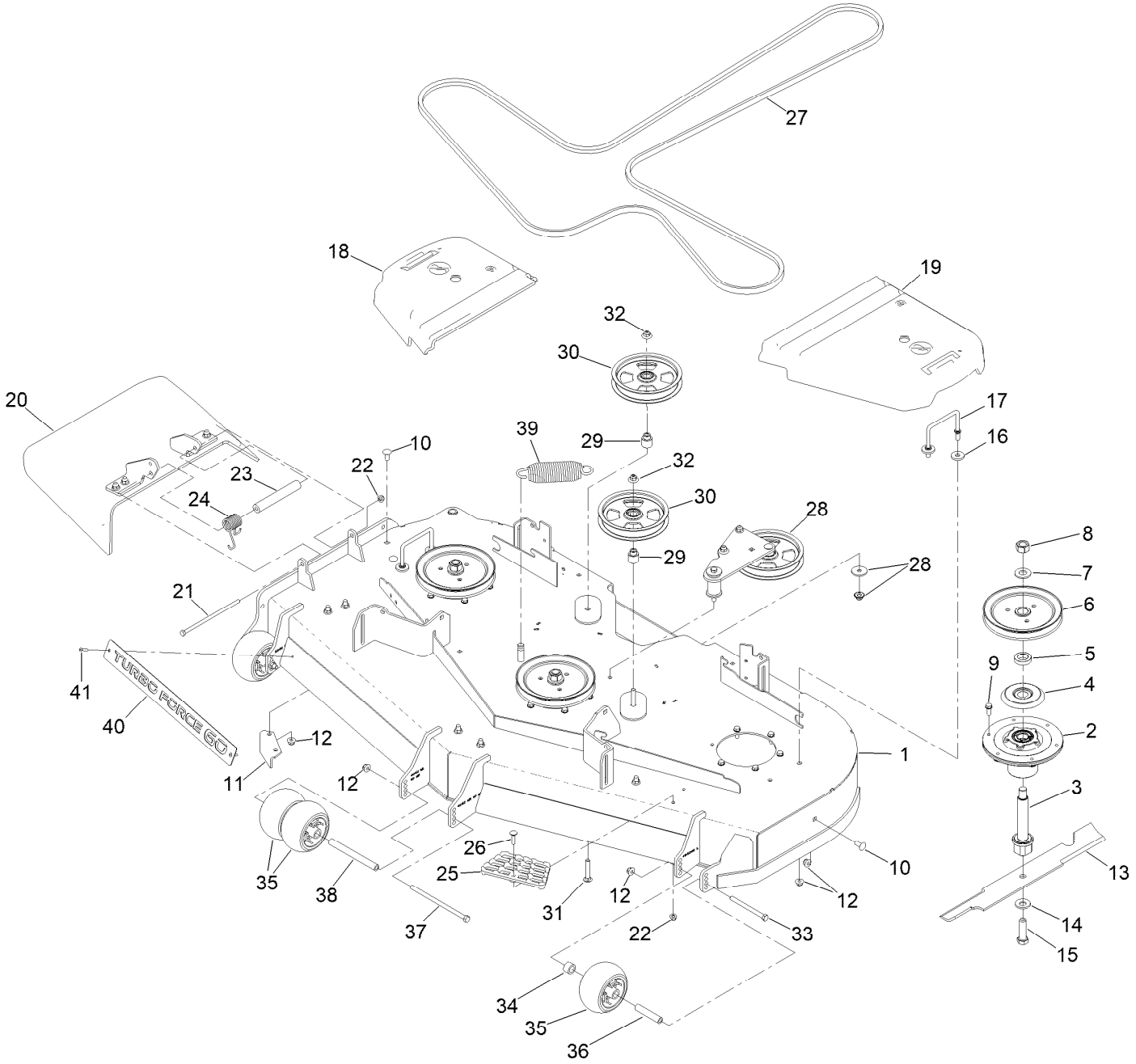

Deck Assembly (continued)

Ref.	Part Number	Qty.	Description
1	147-7373	1	Deck Decal ASM
2	139-2357	3	Spindle ASM
3	133-2126	3	Shaft-Spindle
4	117-7210	3	Shield-Bearing
5	147-2381	3	Spacer-Pulley
6	138-6059	3	Sheave-Drive, Blade
7	103-2802	3	Washer
8	116-7306	3	Nut-Hex
9	32144-41	18	Screw-Taptite
10	3231-27	9	Screw-CARR
11	107-8541-01	1	Baffle-Discharge
12	104-8301	16	Nut-HF, NI
13	133-2127	3	Blade-Rotary, 20.5In (Hi Flow)
14	125-1736	3	Washer-Belleville
15	51-4060	3	Screw-Blade
16	1-373034	4	Washer
17	109-6982	2	Wireform-Cover
18	116-0094	1	Cover-Belt, RH
19	109-6938	1	Cover-Belt, LH
20	144-2635	1	Rubber Deflector ASM
21	322-50	1	Screw-HH
22	104-8300	2	Nut-HF, NI
23	105-4622	1	Spacer
24	108-4052	1	Spring-Torsion
25	126-4781-03	1	Step-Deck
26	3230-3	1	Screw-CARR
27	144-0357	1	Belt-V
28	139-1087	1	Idler Arm ASM
29	139-8061	2	Bushing, Idler
30	132-9424	2	Pulley-Idler, Flat
31	3231-7	2	Screw-CARR
32	109-6658	2	Nut-Flange, NI
33	323-23	2	Screw-HH
34	133-2128	2	Tube-Spacer
35	1-603299	4	Roller-Scalp, Anti
36	133-2129	2	Tube-Shafting
37	108-5388	1	Screw-HH
38	98-5967	1	Spacer-Wheel
39	116-6317	1	Spring-Extension
40	147-4631-03	1	Plate-Turbo Force [black]
41	130-8451	2	Rivet-Trifold

Deck Decal Assembly No. 147-7373

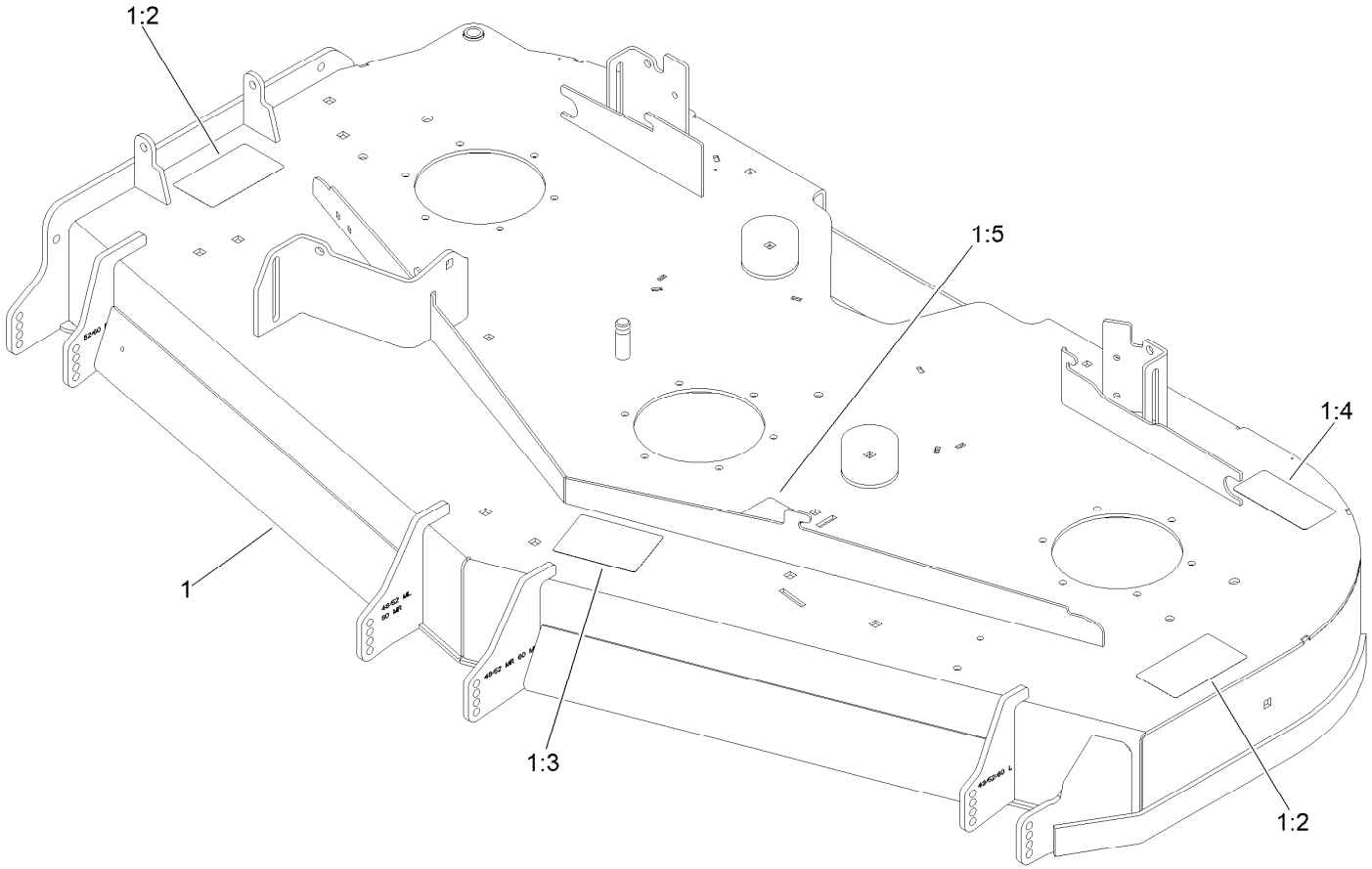

Deck Decal Assembly No. 147-7373 (continued)

Ref.	Part Number	Qty.	Description
1		1	ASM-Deck W/Decals ●
1:2	117-3848	2	Decal-Danger
1:3	127-0326	1	Decal-Scalp, Anti
1:4	93-7818	1	Decal-Torque, Blade Bolt
1:5	109-6035	1	Decal-Routing, Belt

● Not serviced separately

Spindle Assembly No. 139-2357

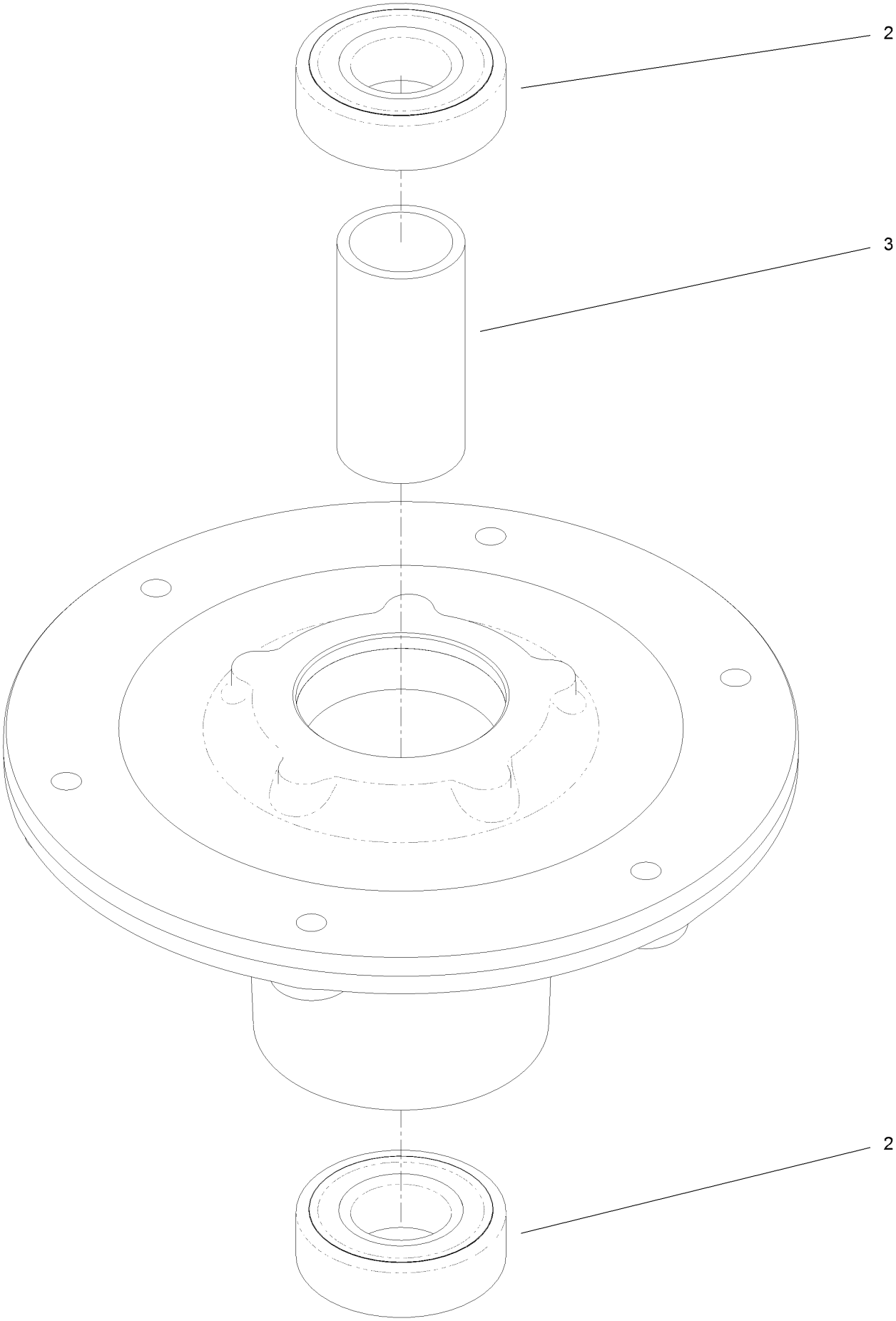

Spindle Assembly No. 139-2357 (continued)

Ref.	Part Number	Qty.	Description
2	116-0720	2	Bearing-Ball
3	138-7220	1	Spacer-Bearing

Deflector Assembly No. 144-2635

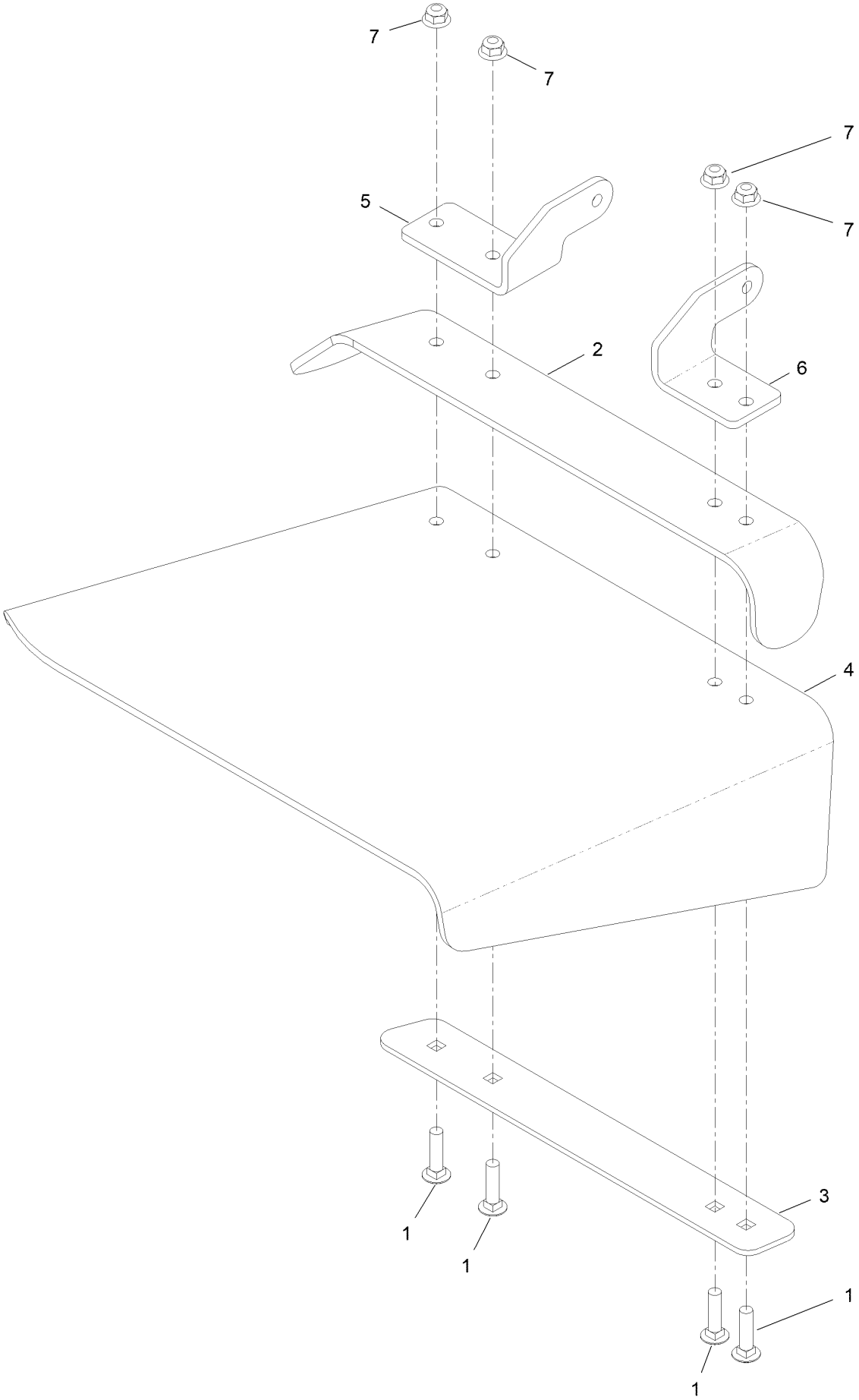

Deflector Assembly No. 144-2635 (continued)

Ref.	Part Number	Qty.	Description
1	3231-4	4	Screw-CARR
2	106-3246-01	1	Deflector
3	106-3248-03	1	Strap-Discharge
4	139-8114	1	Deflector-Deck, Rubber
5	108-4059-01	1	Plate-Hinge, Rear
6	106-3253-01	1	Plate-Hinge, Front
7	104-8301	4	Nut-HF, NI

Idler Arm Assembly No. 139-1087

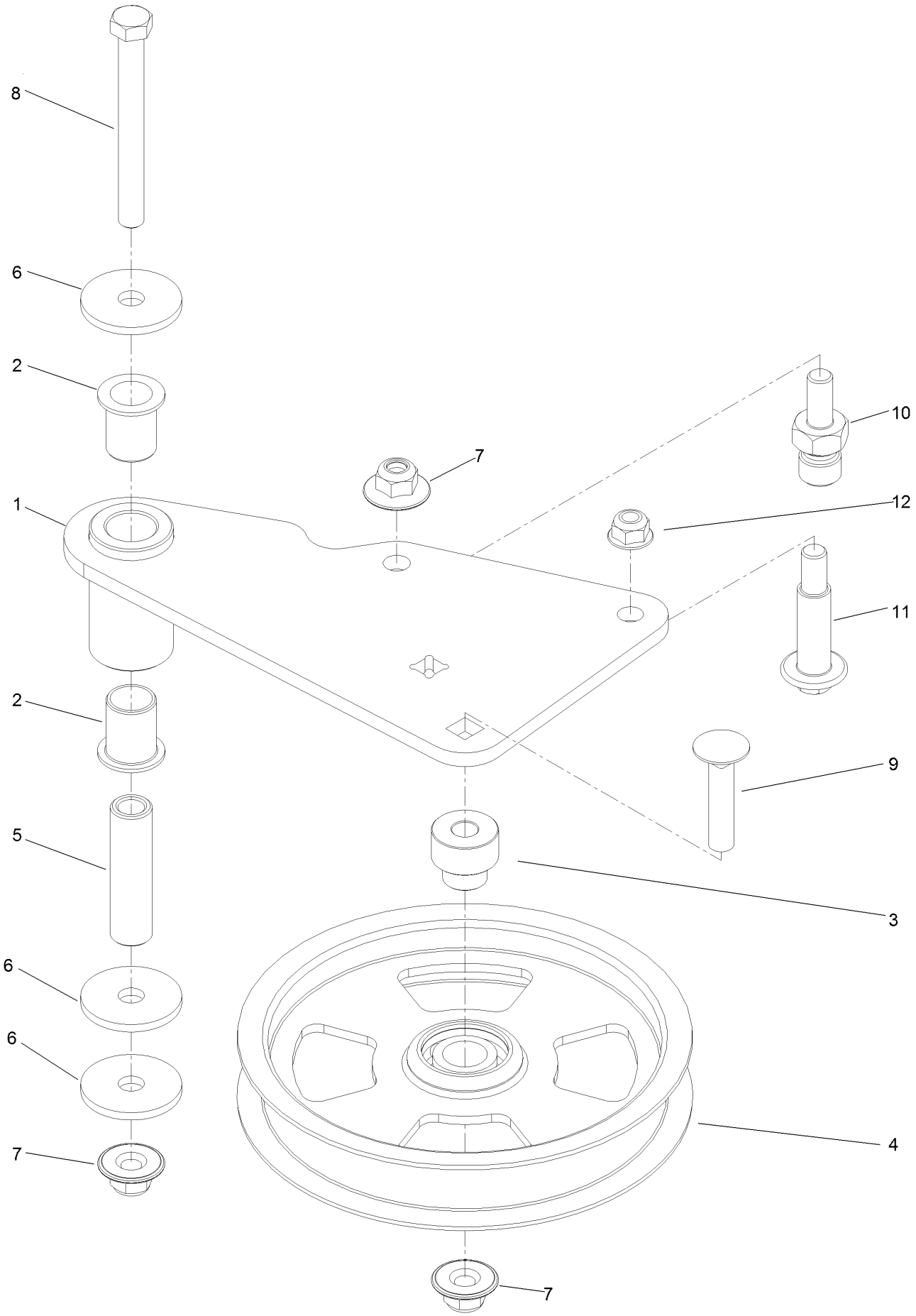

Idler Arm Assembly No. 139-1087 (continued)

Ref.	Part Number	Qty.	Description
1	139-1086	1	Idler Arm ASM
2	138-2573	2	Bushing-Flange
3	139-8060	1	Bushing, Idler
4	132-9424	1	Pulley-Idler, Flat
5	139-6690	1	Bushing, Idler Pivot
6	1-213069	3	Washer
7	109-6658	3	Nut-Flange, NI
8	323-15	1	Screw-HH
9	3231-5	1	Screw-CARR
10	132-4729	1	Anchor-Spring, Short
11	136-9028	1	Bolt-Shoulder, HWH
12	104-8301	1	Nut-HF, NI

Attachments and Accessories

For 77294 60in Z Master Professional 2000 Series Riding Mower

Product Name	Model/Part
Hypr-Oil 500 (quart)	114-4713
Hypr-Oil 500 (gallon)	114-4714
Hypr-Oil 500-5 (5 gallon)	114-4715
Striper Kit	126-7882
Jack Kit	127-6666
Blade-Rotary, 20.5in (Hi Flow)	133-2127
Blade-Rotary, Atomic 20.5in	133-2157
Blade-Rotary, Recycling 20.5in	133-2161
Blade (6 Pack) 20.5in, Hi Flow	133-2174
Blade (6 Pack) 20.5in, Recycler	133-2177
Blade (6 Pack) 20.5in, Atomic	133-2180
Spark Arrestor, 1.25 I.D.	137-8098
Tweel-Turf Tire	139-3649
Recycler Kit	139-6655
Semi Pneumatic Wheel and Tire Assembly, 13x6.50-6	140-4896
Trimmer Mount	144-2665
Jack Mount Kit	144-2676
Hardtop Sun Canopy	144-3719
Wheel And Tire Asm	144-6607
Handle Extension Kit	145-3615
13x6.5n6 Caster Tweel Asm	147-6294
Bucket Mount Kit, Z Master 2000 or 4000 Series Riding Mower	147-6345
Universal Mount Kit, Z Master 2000 or 4000 Series Riding Mower	147-6346
Baffle Kit, Turbo Force 60in	147-7362
Arm Rest Kit	147-7397
2in Reciever Hitch Kit	161-2810
Bagger Kit, Z Master 2000 / 4000	78439
Z 4000 60in Completion Kit	78466

Notes:

TORO®

Count on it.