Form No. 3460-691 Rev C

TORO®

Count on it.

Parts Catalog

Sand Pro® 3040

Traction Unit

Model No. 08743—Serial No. 412818332 and Up

Register at www.Toro.com.
Original Instructions (EN)

3460-691 C

Ordering Replacement Parts

To order replacement parts, please supply the part number, the quantity, and the description of each part desired.

Understanding Reference Numbers

Each identified part in an illustration has a reference number. The reference number for a part also appears in the parts list, along with other information about the part.

This catalog uses two special reference number formats, one to indicate parts in a service assembly and another to indicate the quantity of a given part in an illustration.

Service Assembly Reference Numbers

Parts in service assemblies have reference numbers in the form a:b. The a represents the reference number of the entire service assembly and the b represents a sequential number unique to each part within the service assembly.

For example, a wheel assembly might be identified by reference number 6, the tire by 6:1, the valve by 6:2, and the wheel by 6:3. When you order the assembly identified by reference number 6, you receive all parts identified by reference numbers 6:1,6:2, and 6:3. However, you may also order any part individually. Reference numbers of this type appear in illustration and in parts lists.

Reference Numbers Indicating Quantity

In an illustration, if a reference number indicates more than one part, the reference number has the form nX y. The n represents the quantity of the part, the X is the multiplication symbol, and the y represents the reference number.

For example, in an illustration, the reference number 2X 37 means that two of the parts identified by reference number 37 are indicated.

Contents

Frame and Shroud Assembly 4
Frame Assembly No. 140-0295SP 6
Body and Seat Assembly 8
Seat Assembly No. 144-1350 10
Fuel System Assembly 12
Hydraulic Pump, Tank and Cooler Assembly 14
Variable Piston Pump Assembly No. 138-9132 16
Traction Control Assembly 18
Rear Lift and Lift Circuit Assembly 20
Hydraulic Lift Cylinder Assembly No. 115-5647 22
Hydraulic Valve Assembly No. 121-9070 24
Lift Hydraulic Routing Assembly 26
Rear Wheel Assembly 28
Hydraulic Motor Assembly No. 108-2947 30
Hydraulic Motor Assembly No. 108-2949 32
Front Wheel Assembly 34
Hydraulic Motor Assembly No. 108-2948 36
Steering Assembly 38
Steering Box Assembly No. 107-3526 40
Engine Installation Assembly 42
Air Cleaner Assembly No. 93-2190 44
Electrical and Console Assembly 46
Attachments and Accessories 48

© 2023—The Toro® Company
8111 Lyndale Avenue South
Bloomington, MN 55420

Contact us at www.Toro.com.
Printed in the USA.
All Rights Reserved

Frame and Shroud Assembly

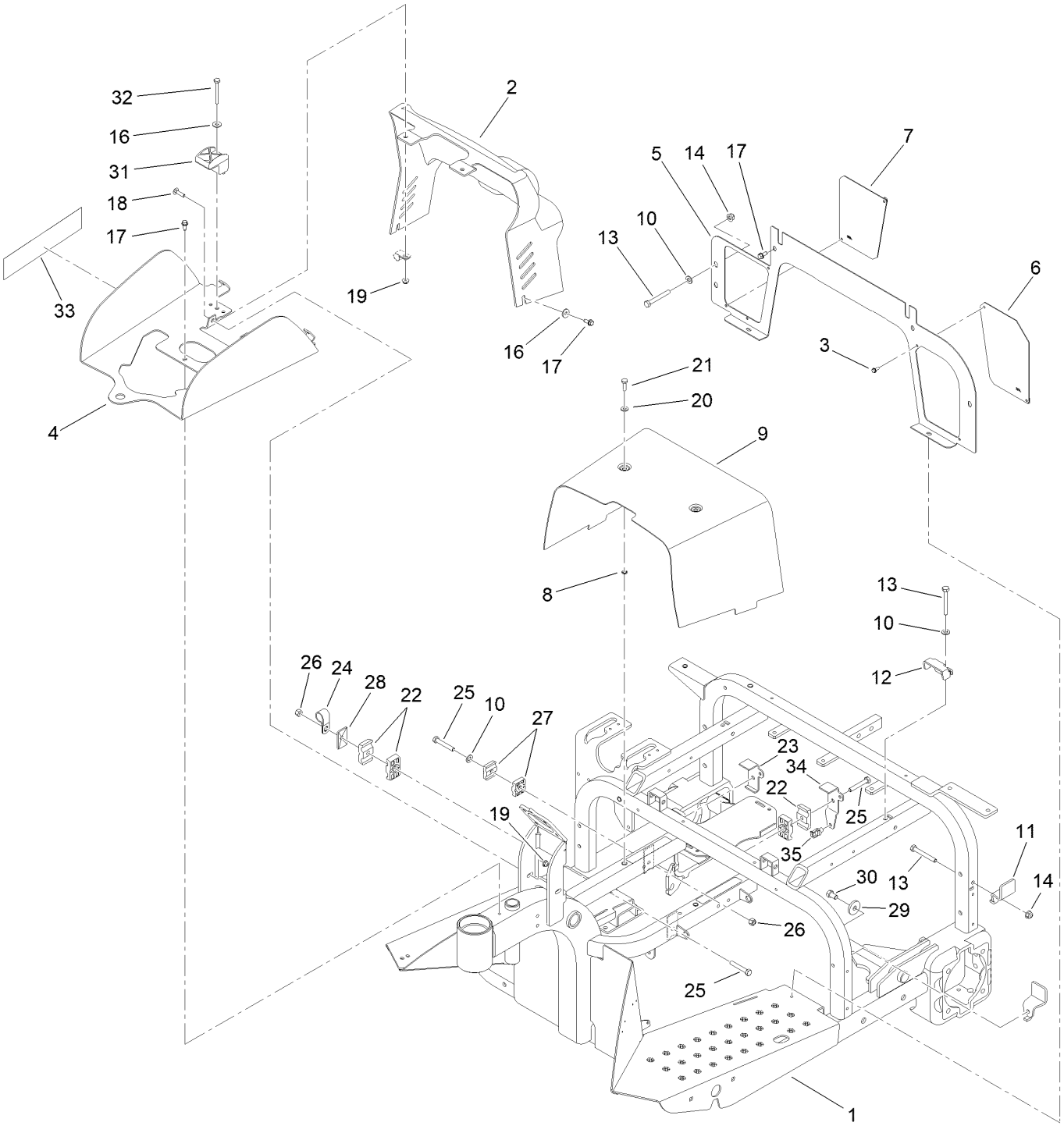

Frame and Shroud Assembly (continued)

Ref.	Part Number	Qty.	Description
1	140-0295SP	1	Frame ASM
2	108-6898	1	Shroud-Dash
3	3290-321	4	Screw-HWH
4	108-6895-01	1	Bracket-Mount, Tank
5	112-1443-01	1	Panel-Front
6	120-3491-01	1	Screen-Panel, LH
7	120-3492-01	1	Screen-Panel, RH
8	32115-15	2	Nut-Push
9	108-6859-01	1	Shroud-Center
10	3256-23	6	Washer-Plain
11	108-7965	2	Clamp-Tank, HYD
12	108-7903	1	Clamp-Tank
13	322-12	5	Screw-HH
14	104-8300	5	Nut-HF, NI
16	3256-78	4	Washer-Flat
17	32144-10	7	Screw-HWH
18	3229-2	2	Screw-CARR
19	104-7201	4	Nut-HF, NI
20	3256-1	2	Washer-Flat
21	321-5	2	Screw-HH
22	56-7976	6	Clamp-Tube
23	110-1333	1	Bracket-Clamp
24	2412-4	1	Clamp-R
25	322-10	4	Screw-HH
26	3296-29	4	Nut-Lock, NI
27	56-7973	2	Clamp-Tube
28	69-9760	1	Plate-Cover
29	53-6380	1	Washer-Flat
30	323-34	1	Screw-HH
31	107-4543	2	Clamp
32	321-18	2	Screw-HH
33	108-8420	2	Decal
34	110-1332	1	Bracket-Clamp
35	32180-030	1	Clip-Tie

Frame Assembly No. 140-0295SP

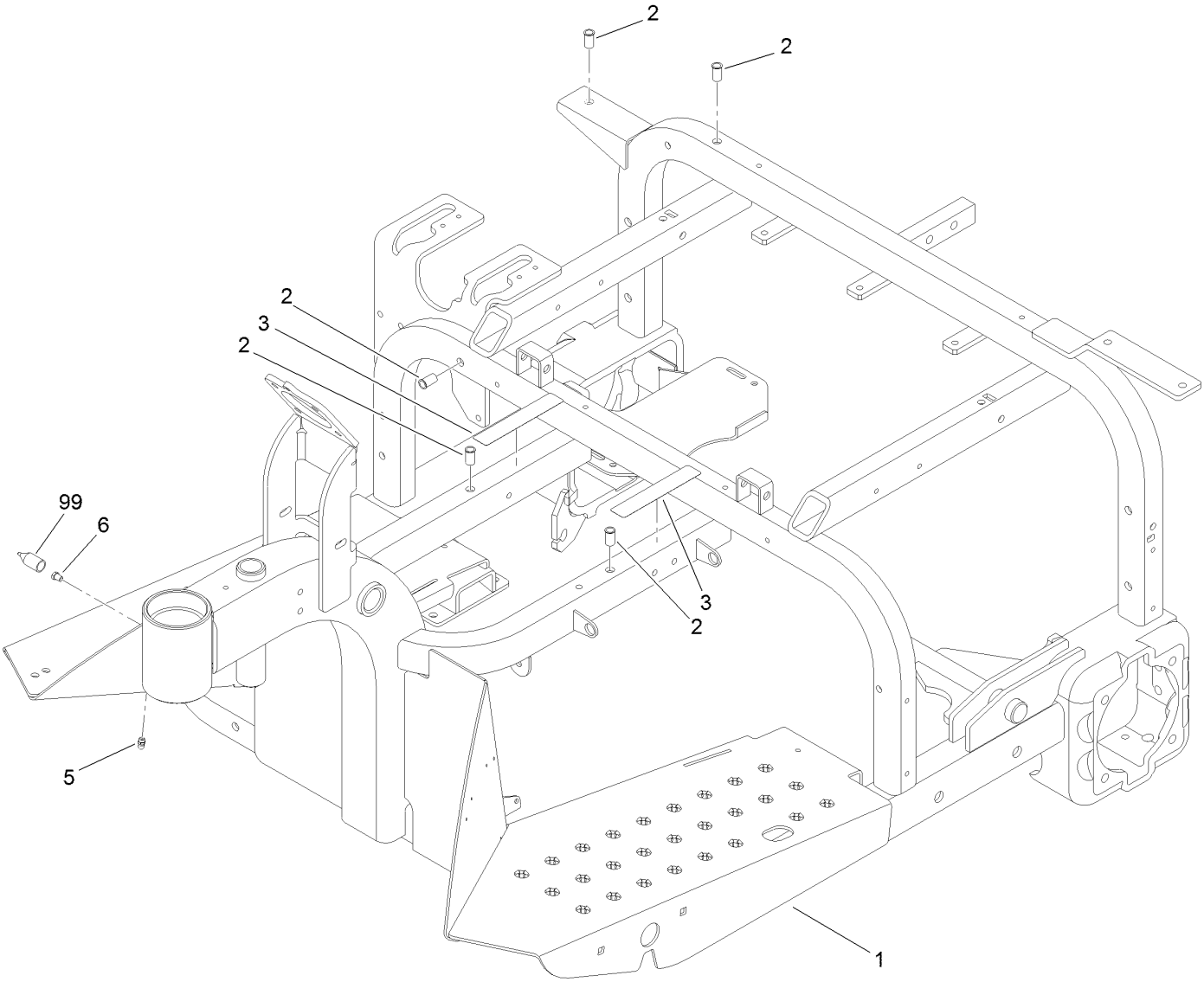

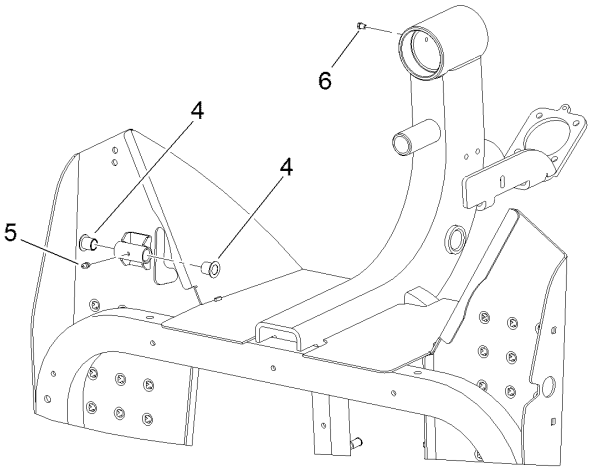

Frame Assembly No. 140-0295SP (continued)

Ref.	Part Number	Qty.	Description
1		1	Frame ASM ●
2	32148-11	5	Nut-Clinch
3	93-7272	2	Decal-Warning
4	256-219	2	Bushing
5	302-58	1	Fitting-Straight
6	107-1997	1	Fitting-Grease
99	107-1998	1	Nozzle-Grease

● Not serviced separately

Body and Seat Assembly

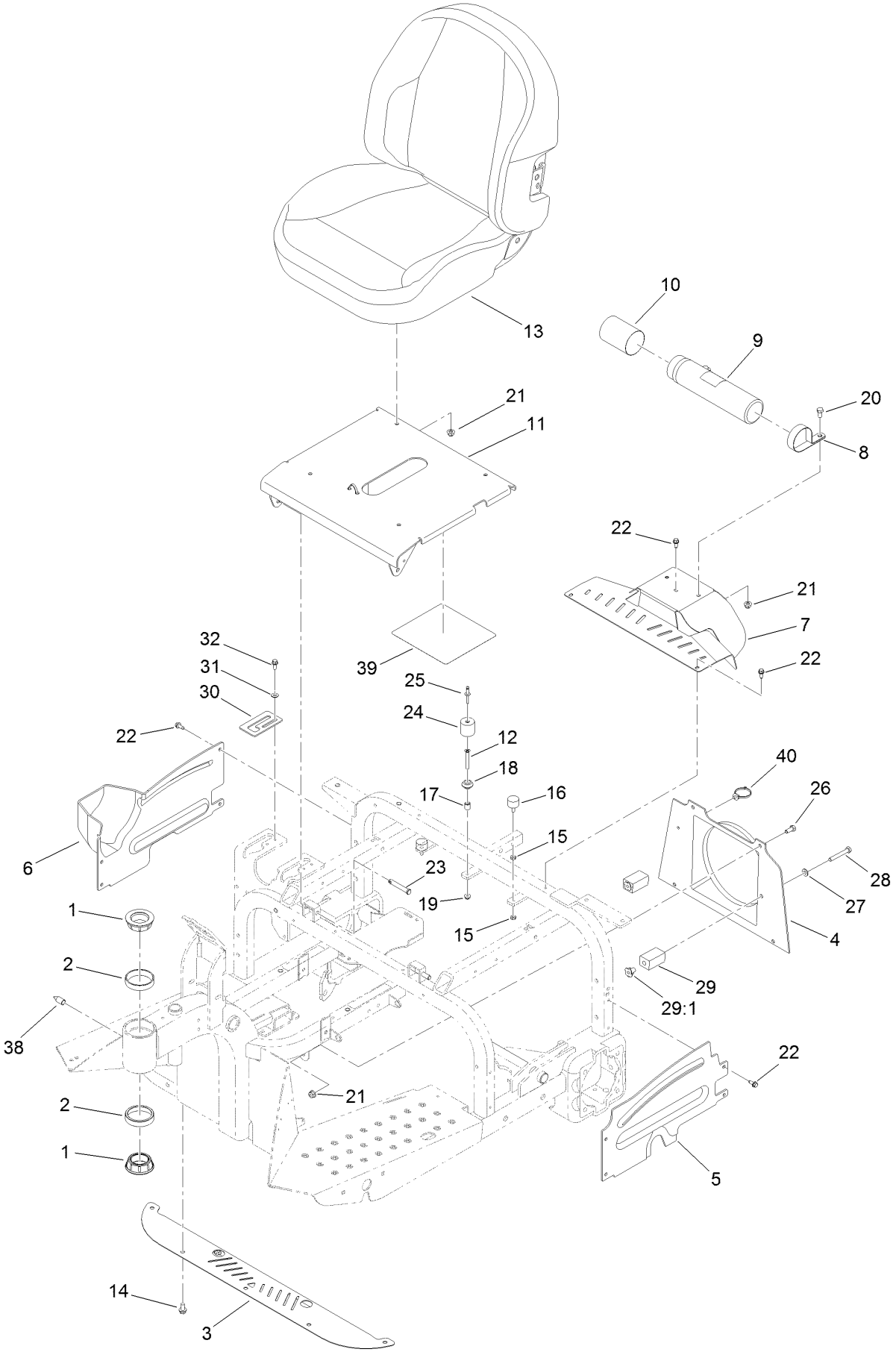

Body and Seat Assembly (continued)

Ref.	Part Number	Qty.	Description
1	107-7590	2	Cup-Bearing
2	107-7589	2	Cone-Bearing (W/ Seal)
3	140-0262-0P	1	Panel-Cooler
4	140-0263	1	Shroud-Fan
5	108-6856	1	Shroud-Wheel, LH
6	108-6855	1	Shroud-Wheel, RH
7	121-9081-01	1	Cover-Rear
8	2412-133	2	Clamp-R
9	104-7050	1	Tube-Manual
10	104-7048	1	Cap-Housing
11	144-1375	1	Base-Seat
12	363-1571	1	Screw-PFH
13	144-1350	1	Seat ASM
14	32144-14	5	Screw-HWHTF
15	3218-1	4	Nut-Jam
16	1-523420	2	Bumper
17	609588	1	Spacer
18	99-7833	1	Post-Holding
19	104-7201	1	Nut-HF, NI
20	322-2	2	Screw-HH
21	104-8300	10	Nut-HF, NI
22	32144-10	11	Screw-HWH
23	112-7153	2	Pin
24	99-7830	1	Receptical-Rubber
25	3290-412	1	Rivet-Blind
26	322-3	4	Screw-HH
27	3256-23	2	Washer-Plain
28	322-11	2	Screw-HH
29	85-9550	2	Rubber Clamp ASM
29:1	85-9670	1	Nut-T
30	108-7941	1	Plate-Guide, Lever
31	3256-1	2	Washer-Flat
32	3234-33	2	Screw-HHF
38	107-1998	1	Nozzle-Grease
39	138-9101	1	Decal-Service
40	32180-088	1	Clip-Fir Tree W/Tie

Seat Assembly No. 144-1350

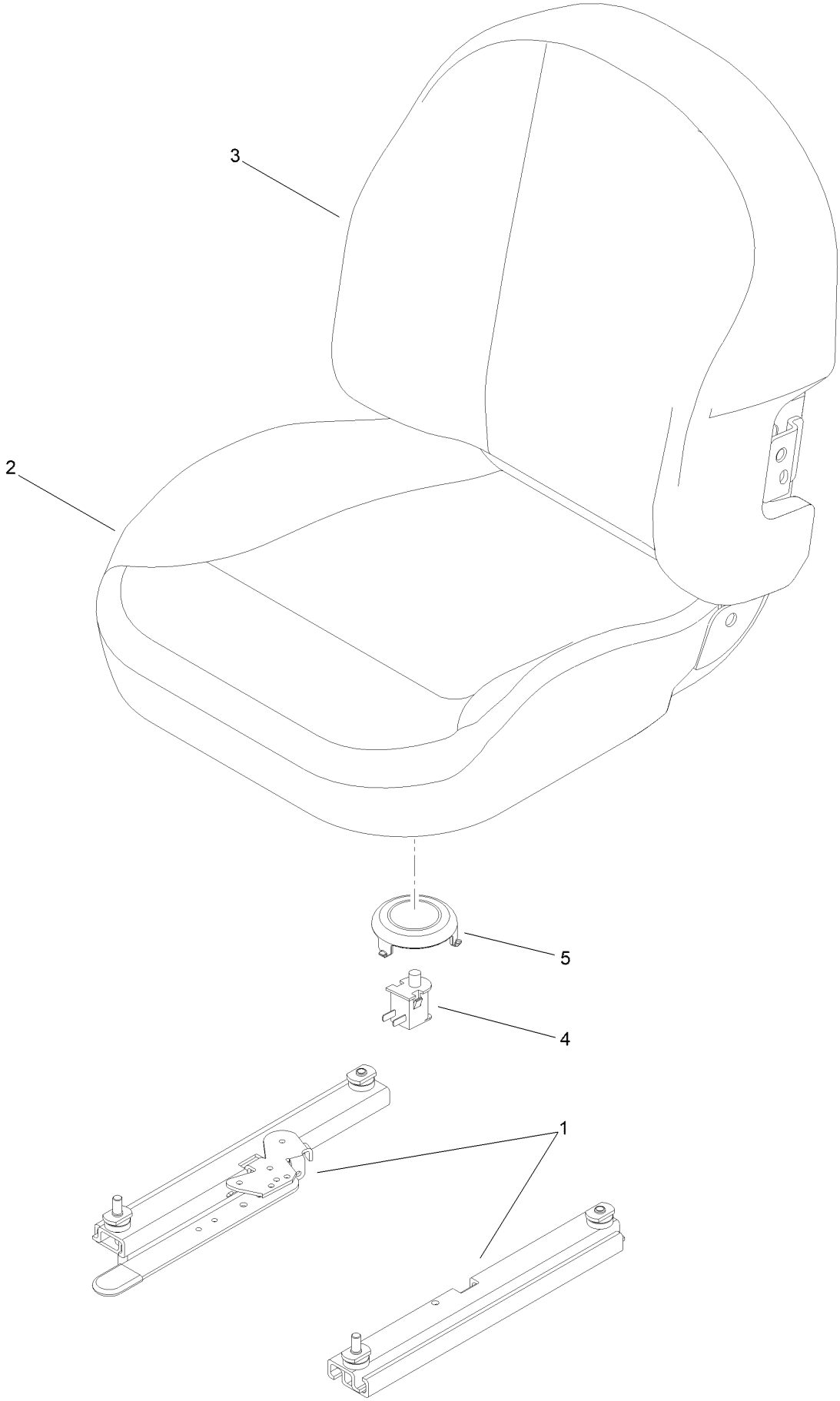

Seat Assembly No. 144-1350 (continued)

Ref.	Part Number	Qty.	Description
1	144-7068	1	Track ASM
2	144-7069	1	Cushion Cover
3	144-7070	1	Back Cover
4	82-2190	1	Switch-Bail
5	140-3468	1	Cap-Switch, Actuator

Fuel System Assembly

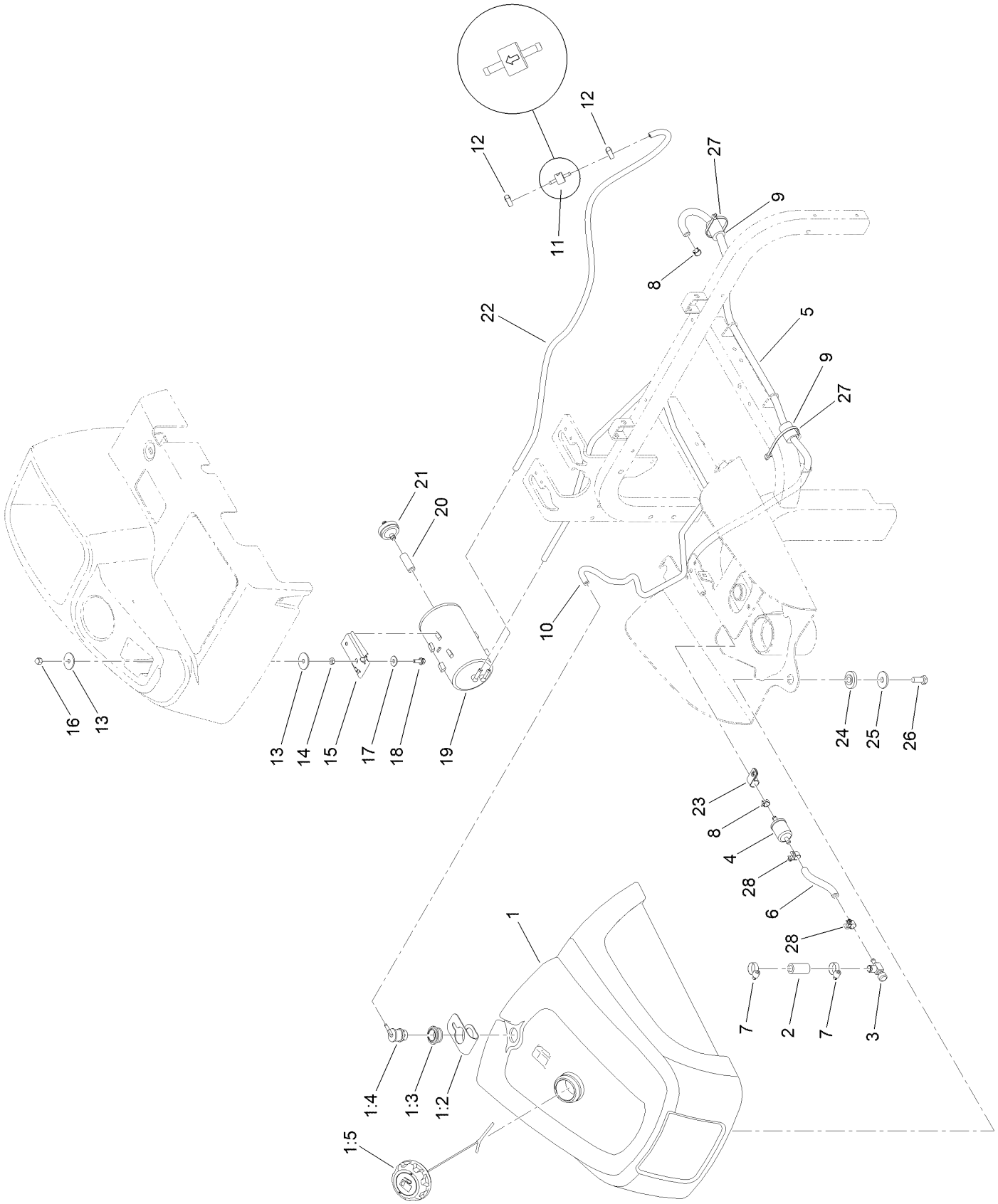

Fuel System Assembly (continued)

Ref.	Part Number	Qty.	Description
1	144-7092	1	Fuel Tank ASM
1:2	144-7080	1	Shield-Vent
1:3	114-0284	1	Grommet
1:4	114-0285	1	Valve-Rollover
1:5	126-1789	1	Cap-Fuel, Ratcheting
2	110-3371	1	Hose-Fuel
3	83-1390	1	Valve-Shut-Off, Fuel
4	94-2690	1	Filter-Fuel
5	110-3372	1	Hose-Fuel
6	109-0660	1	Hose-Fuel
7	2412-36	2	Clamp-Hose
8	2412-98	2	Clamp-Hose
9	38-3400	2	Guard-Rubber
10	117-9568	1	Hose-Fuel
11	133-8499	1	Valve-Check, Vacuum
12	2412-108	2	Clamp-Worm
13	3256-57	2	Washer-Flat
14	3218-1	1	Nut-Jam
15	114-0292	1	Bracket-Canister, Carbon
16	32111-7	1	Nut-Cap
17	3256-78	1	Washer-Flat
18	3234-33	1	Screw-HHF
19	127-8685	1	Canister-Carbon
20	106-5317	1	Hose-Fuel
21	115-7854	1	Filter-Fuel, Inline
22	117-9569	1	Hose-Fuel
23	92-6064	1	Clamp-R
24	240-11	1	Bushing-Flange
25	63-8410	1	Washer
26	323-5	1	Screw-HH
27	3290-379	2	Tie-Cable
28	145-4564	2	Clamp-Band, Screw

Hydraulic Pump, Tank and Cooler Assembly

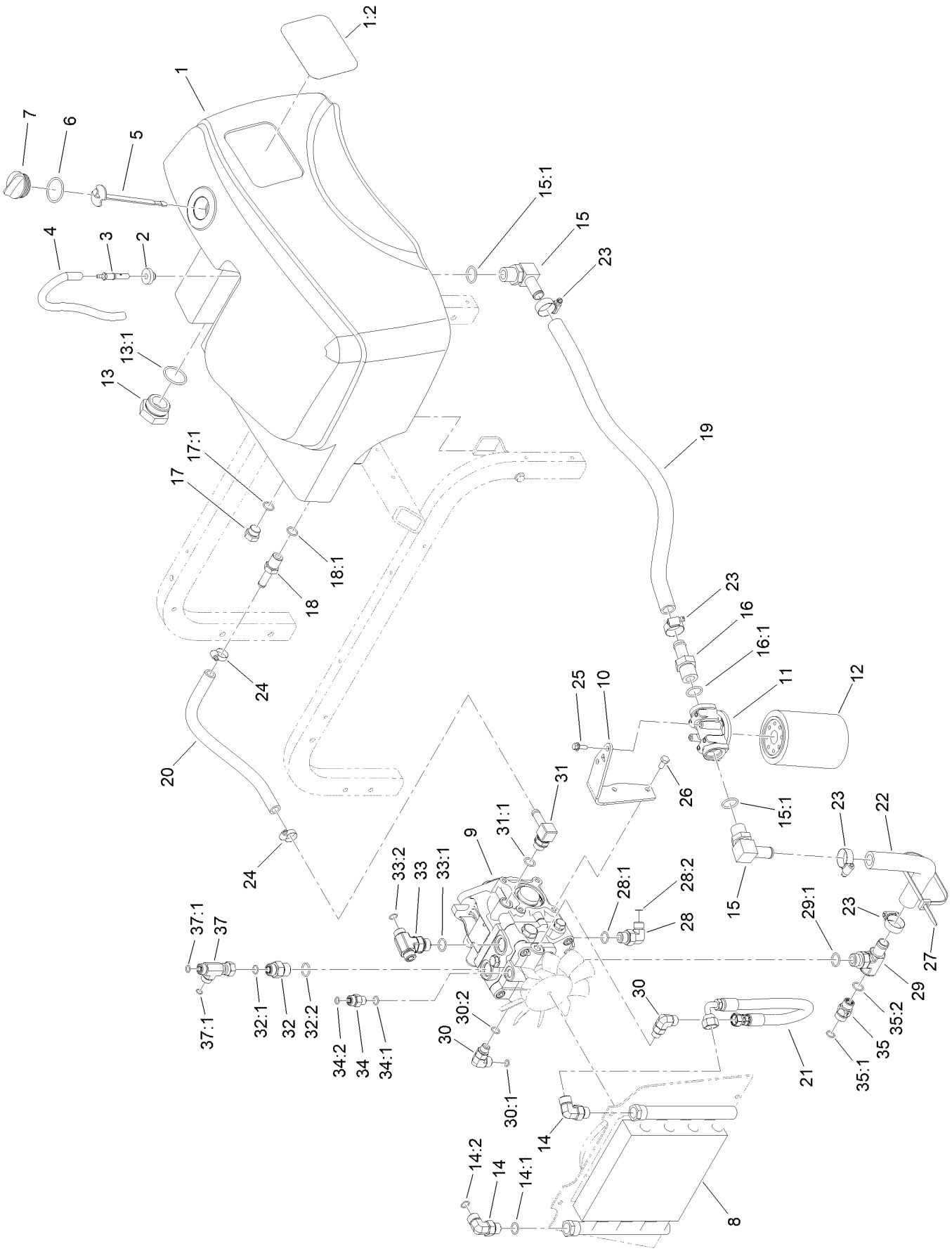

Hydraulic Pump, Tank and Cooler Assembly (continued)

Ref.	Part Number	Qty.	Description
1	140-0319	1	HYD Tank W/Decal
1:2	108-8452	1	Decal-Logo
2	46-6560	1	Bushing
3	110-1372	1	Fitting-Vent, Tank
4	75-4704	1	Hose-Fuel
5	110-8162	1	Dipstick
6	237-101	1	O-Ring
7	93-7498	1	Plug-Plastic
8	108-8457	1	Cooler-Oil
9	138-9132	1	Pump-Piston, Variable
10	144-7094	1	Bracket-Filter, Mount
11	68-8990	1	Head-Filter
12	54-0110	1	Filter-Oil, Transmission
13	108-8468	1	Plug-HH
13:1	237-101	1	O-Ring
14	340-98	2	Fitting-Elbow, 90 DEG
14:1	237-79	1	O-Ring
14:2	237-30	1	O-Ring
15	353-987	2	Fitting-Elbow, 90
15:1	237-81	1	O-Ring
16	354-73	1	Fitting
16:1	237-81	1	O-Ring
17	353-550	1	Plug-HYD, HH
17:1	237-79	1	O-Ring
18	354-121	1	Fitting-STR
18:1	237-79	1	O-Ring
19	140-0328	1	Hose - HYD, LP
20	140-0265	1	Hose-Return
21	121-1583	1	Hose-HYD
22	140-0264	1	Hose-Suction
23	2412-129	4	Clamp-Hose
24	2412-36	2	Clamp-Hose
25	3234-4	2	Screw-HHF
26	33114-016	2	Screw-HH
27	3290-378	5	Tie-Cable
28	340-18	1	Fitting-HYD, 90 DEG
28:1	237-79	1	O-Ring
28:2	237-22	1	O-Ring
29	140-0344	1	Fitting-Tee
29:1	237-80	1	O-Ring
30	340-77	2	Fitting-Elbow, 90 DEG
30:1	237-22	1	O-Ring
30:2	237-42	1	O-Ring
31	108-5316	1	Fitting-Elbow, 90 DEG
31:1	237-79	1	O-Ring
32	340-6	1	Fitting-Straight
32:1	237-30	1	O-Ring
32:2	237-80	1	O-Ring
33	130-8775	1	Fitting-HYD
33:1	237-80	1	O-Ring
33:2	237-30	2	O-Ring
34	100-7210	1	Check Valve
34:1	237-42	1	O-Ring
34:2	237-22	1	O-Ring
35	140-0335	1	Fitting-Check
35:1	237-30	1	O-Ring
35:2	237-79	1	O-Ring
37	340-115	1	Fitting-Tee
37:1	237-22	2	O-Ring

Variable Piston Pump Assembly No. 138-9132

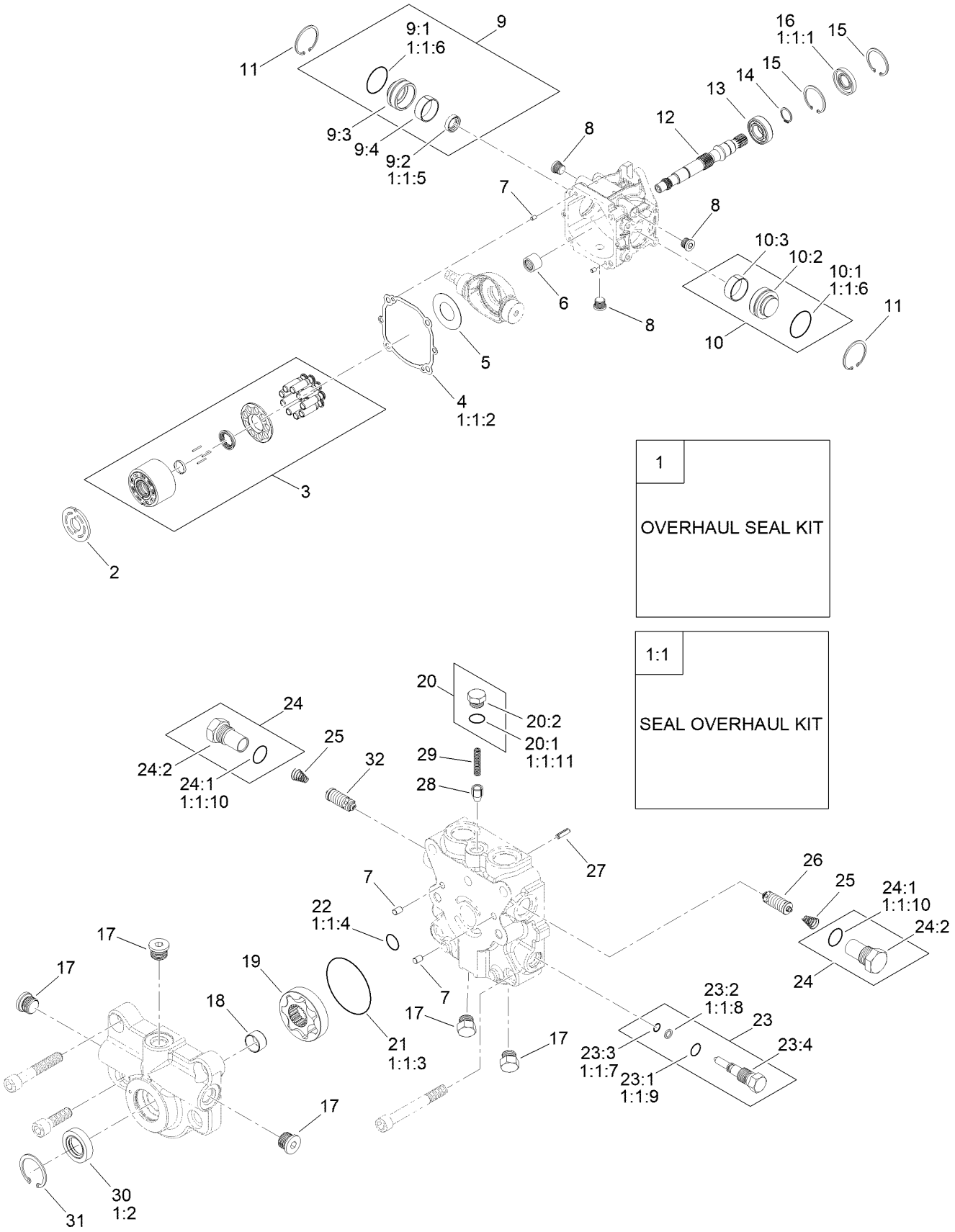

Variable Piston Pump Assembly No. 138-9132 (continued)

Ref.	Part Number	Qty.	Description
1	144-1389	1	Overhaul Seal Kit
1:1	136-1010	1	Seal Overhaul Kit
1:1:1	136-1021	1	Seal-Lip, Shaft
1:1:2	136-1023	1	Gasket-Cap, End
1:1:3	136-1031	1	O-Ring
1:1:4	136-1032	1	O-Ring
1:1:5		1	Seal-Lip, Journal Bearing ●
1:1:6		2	O-Ring, Journal Bearing ●
1:1:7		1	O Ring-Valve, Bypass ●
1:1:8		1	Ring-Back Up ●
1:1:9		1	O Ring-Valve, Bypass ●
1:1:10		2	O Ring-Plug ●
1:1:11		1	O Ring-Plug ●
1:2	144-1385	1	Seal-Lip
2	144-1384	1	Plate-Valve, CCW
3	136-1011	1	Cylinder Block Kit
4	136-1023	1	Gasket-Cap, End
5	136-1013	1	Plate-Thrust
6	136-1022	1	Bearing-Needle
7	136-1024	4	Pin
8	74-9450	3	Plug
9	136-1014	1	Journal Bearing Carrier ASM
9:1		1	O-Ring ●
9:2		1	Seal-Lip ●
9:3		1	Body ●
9:4		1	Race-Inner ●
10	136-1015	1	Journal Bearing Carrier ASM
10:1		1	O-Ring ●
10:2		1	Body ●
10:3		1	Race-Inner ●
11	136-1020	2	Ring-Retaining
12	144-1390	1	Shaft
13	136-1017	1	Bearing-Ball
14	136-1018	1	Ring-Retaining
15	136-1019	2	Ring-Retaining
16	136-1021	1	Seal-Lip, Shaft
17	136-1027	5	Plug ASM
18	136-1030	1	Bearing-Journal
19	136-1029	1	Gerotor ASM
20	136-1028	1	Plug ASM
20:1		1	O-Ring ●
20:2		1	Plug ●
21	136-1031	1	O-Ring
22	136-1032	1	O-Ring
23	136-1037	1	Bypass Valve ASM
23:1		1	O-Ring ●
23:2		1	Back Up Ring ●
23:3		1	O-Ring ●
23:4		1	Plug ●
24	136-1025	2	Plug ASM
24:1		1	O-Ring ●
24:2		1	Plug ●
25	136-1035	2	Spring
26	110-6343	1	Valve-Scr
27	131-3800	1	Pin-Slotted
28	136-1033	1	Cone-Valve, Relief
29	144-1387	1	Spring
30	144-1385	1	Seal-Lip
31	144-1386	1	Ring-Retaining
32	144-1388	1	Valve-Scr (230 Bar/3335 PSI)

● Not serviced separately

Traction Control Assembly

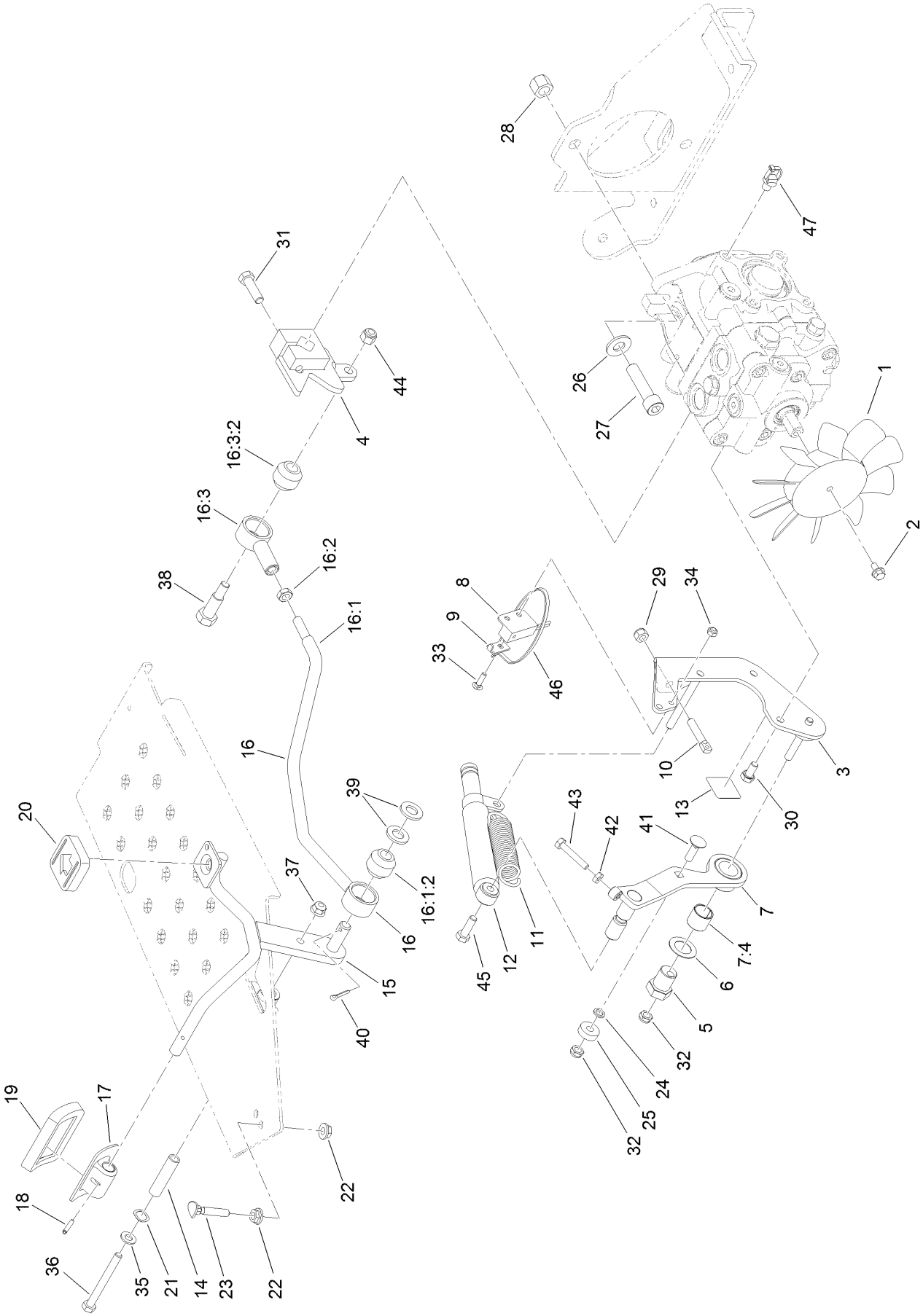

Traction Control Assembly (continued)

Ref.	Part Number	Qty.	Description
1	140-0258	1	Fan-Cooling, Pump
2	126-2713	1	Screw-HHF
3	140-0257-0P	1	Plate-Pump
4	140-0287	1	Cam-Input, Pump
5	93-2111	1	Stud-Traction
6	3-6498	1	Washer-Thrust
7	140-0291	1	Neutral Arm ASM
7:4	94-9609	1	Bushing-Straight
8	120-6385	1	Sensor-Ferrous Proximity, No
9	100-4872	1	Plate-Switch, Neutral
10	18-6380	1	Pin-Adjustment, Steering
11	115-4712	1	Spring-Extension
12	140-6248	1	Damper
13	93-9051	1	Decal-Bolt, Eccentric
14	85-8960	1	Spacer
15	108-5498-01	1	Pedal
16	117-9564	1	Traction Rod ASM
16:1	115-5626	1	Rod ASM
16:1:2	23-2270	1	Bushing-Rubber
16:2	3220-3	1	Nut-HJ
16:3	115-5623	1	Isolated Rod End ASM
16:3:2	23-2270	1	Bushing-Rubber
17	117-9507	1	Pedal-Accelerator
18	32121-45	1	Pin-Spring
19	74-9100	1	Pad-Pedal, Forward
20	74-9110	1	Pad-Pedal, Reverse

Ref.	Part Number	Qty.	Description
21	108473	1	Washer-Wave
22	32128-20	2	Nut-HF
23	17-9420	1	Screw-Handle
24	75-5470	1	Spacer-Bearing
25	251-259	1	Bearing-Ball
26	87-7270	2	Washer-Thrust
27	3274-5	2	Screw-HSH
28	3296-23	2	Nut-Lock, NI
29	3296-4	1	Nut-Lock
30	33114-016	3	Screw-HH
31	323-7	1	Screw-HH
32	3296-47	2	Nut-Lock,NI
33	3229-20	1	Screw-CARR
34	3296-2	1	Nut-Lock, NI
35	3256-23	1	Washer-Plain
36	322-14	1	Screw-HH
37	104-8300	1	Nut-HF, NI
38	117-4698	1	Screw-Shoulder, HH
39	106-9888	2	Washer-Flat
40	3272-10	1	Pin-Cotter
41	3230-2	1	Bolt-CARR
42	3218-1	1	Nut-Jam
43	321-43	1	Capscrew
44	3296-39	1	Nut-Lock, NI
45	116-0648	1	Screw-HH, Thread Locking
46	3290-379	2	Tie-Cable
47	32180-030	1	Clip-Tie

Rear Lift and Lift Circuit Assembly

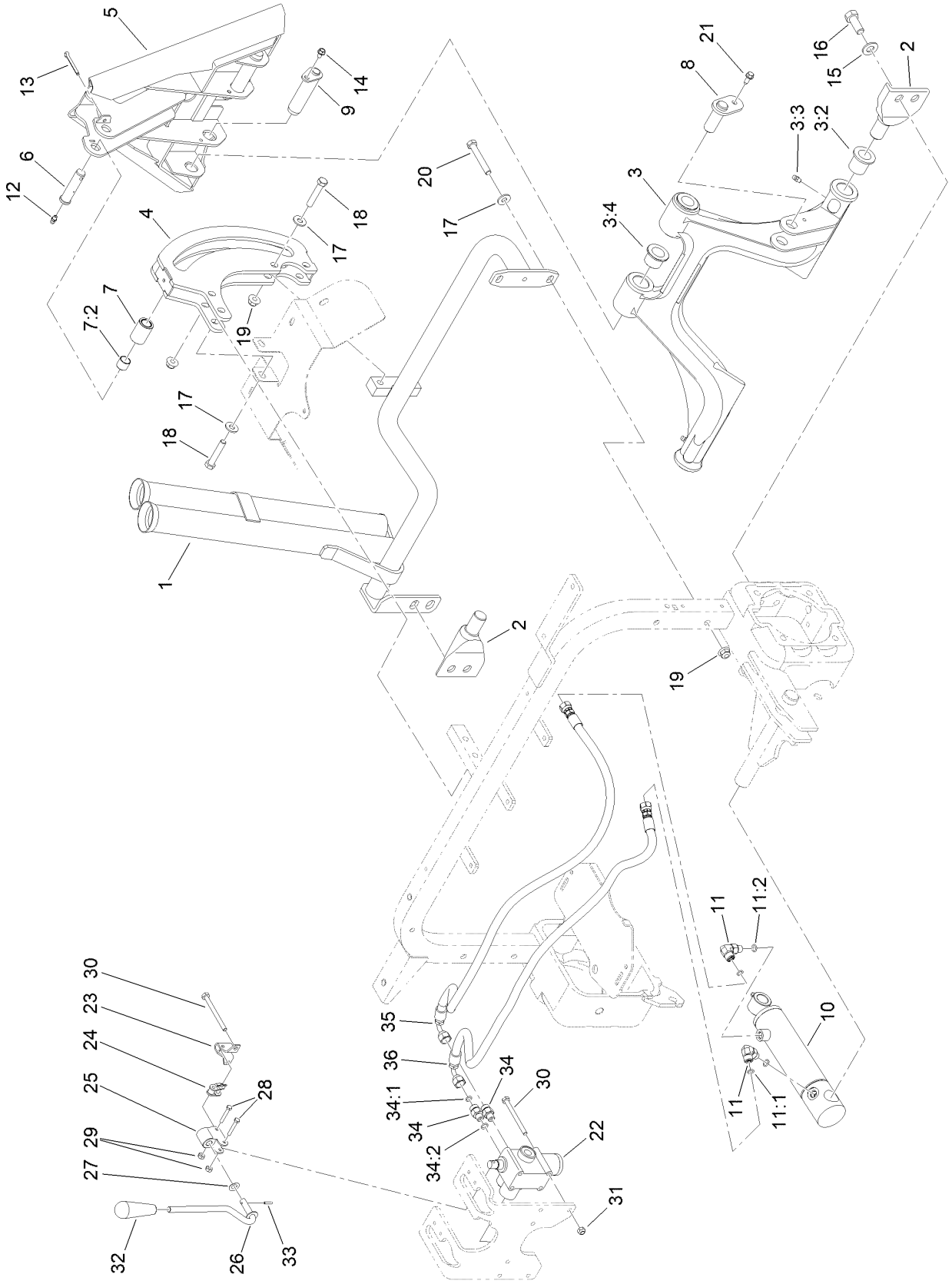

Rear Lift and Lift Circuit Assembly (continued)

Ref.	Part Number	Qty.	Description
1	120-3465-03	1	Frame-Hitch
2	115-5618	2	Pivot-Hub
3	120-3457	1	Rear Hitch ASM
3:2	95-3577	2	Bushing
3:3	302-5	4	Fitting-Grease
3:4	33-3090	4	Bushing
4	110-1368-03	1	Roller Plate ASM
5	130-7879	1	Adapter Frame ASM
6	108-2282	1	Pin-Clevis
7	108-5472	1	Tube ASM
7:2	256-311	2	Bushing-Split
8	115-5648	1	Pin-Flag
9	138-6484	2	Pin
10	115-5647	1	HYD Lift Cylinder ASM
11	340-132	2	Fitting-Elbow, 90 DEG
11:1	237-78	1	O-Ring
11:2	237-21	1	O-Ring
12	302-5	1	Fitting-Grease
13	3272-23	1	Pin-Cotter
14	137-4795	2	Screw
15	3256-26	4	Washer-Flat
16	325-5	4	Screw-HH
17	3256-3	6	Washer-Flat
18	323-10	4	Screw-HH
19	104-8301	6	Nut-HF, NI
20	323-12	2	Screw-HH
21	32144-10	1	Screw-HWH
22	121-9070	1	Valve ASM
23	88-8480	1	Bracket-Pivot
24	2710-20	1	Link-Offset
25	125-1944	1	Pivot-Hinge
26	108-7942	1	Lever-Rear
27	3290-477	1	Washer-Curved
28	3290-360	2	Screw-HH
29	3296-2	2	Nut-Lock, NI
30	321-23	3	Screw-HH
31	3296-8	3	Nut-Hex
32	98-0152	1	Knob-Tapered
33	32121-73	1	Pin-Roll
34	340-92	2	Fitting-Straight
34:1	237-78	1	O-Ring
34:2	237-21	1	O-Ring
35	95-8837	1	Hose ASM
36	100-3833	1	Hose-HYD

Hydraulic Lift Cylinder Assembly No. 115-5647

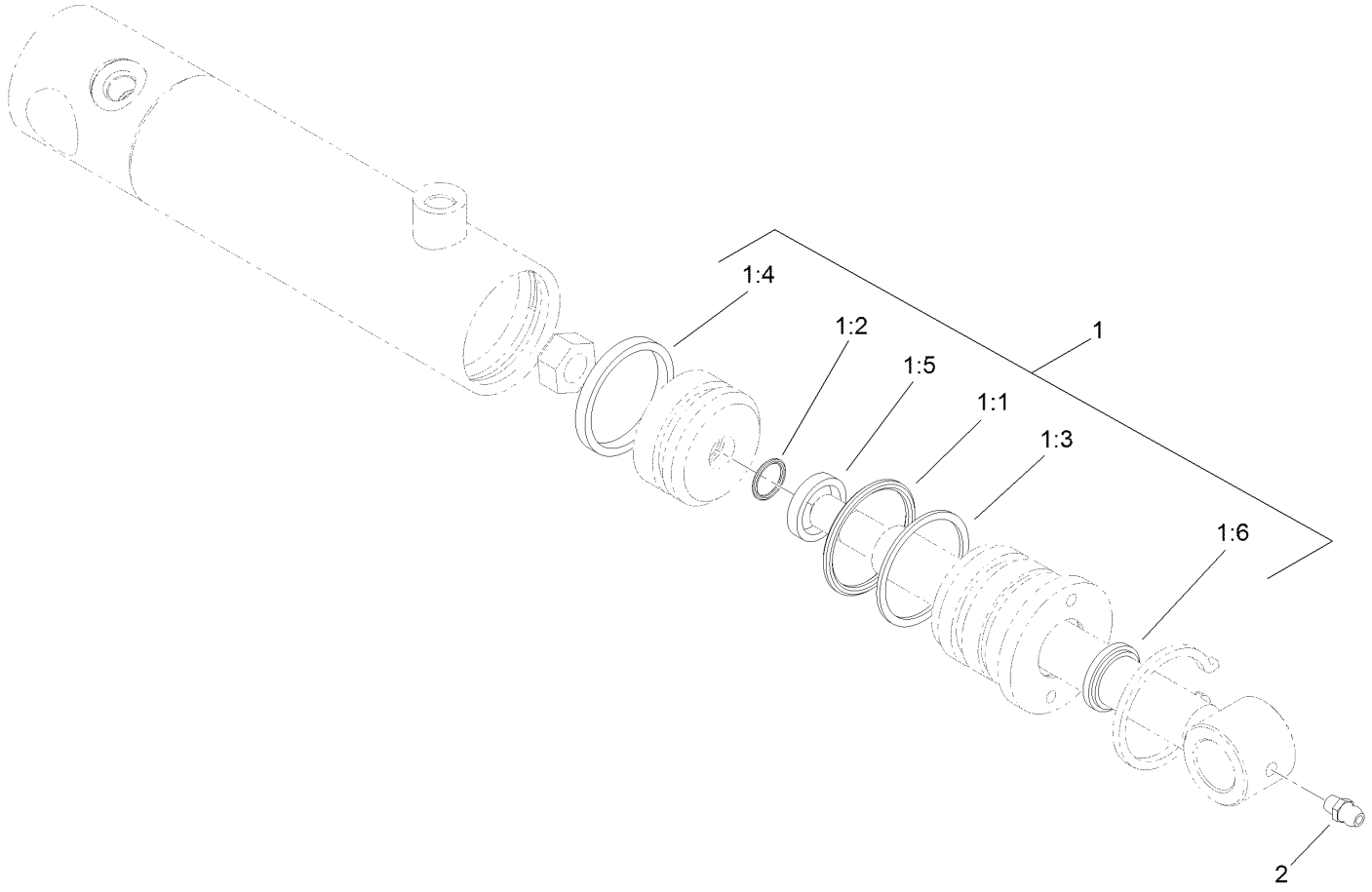

Hydraulic Lift Cylinder Assembly No. 115-5647 (continued)

Ref.	Part Number	Qty.	Description
1	108-4597	1	Seal Kit
1:1		1	O-Ring ●
1:2		1	O-Ring ●
1:3		1	Ring-Back Up ●
1:4		1	Seal-Psp ●
1:5		1	Seal-Rod ●
1:6		1	Seal-Dust ●
2	302-5	1	Fitting-Grease

● Not serviced separately

Hydraulic Valve Assembly No. 121-9070

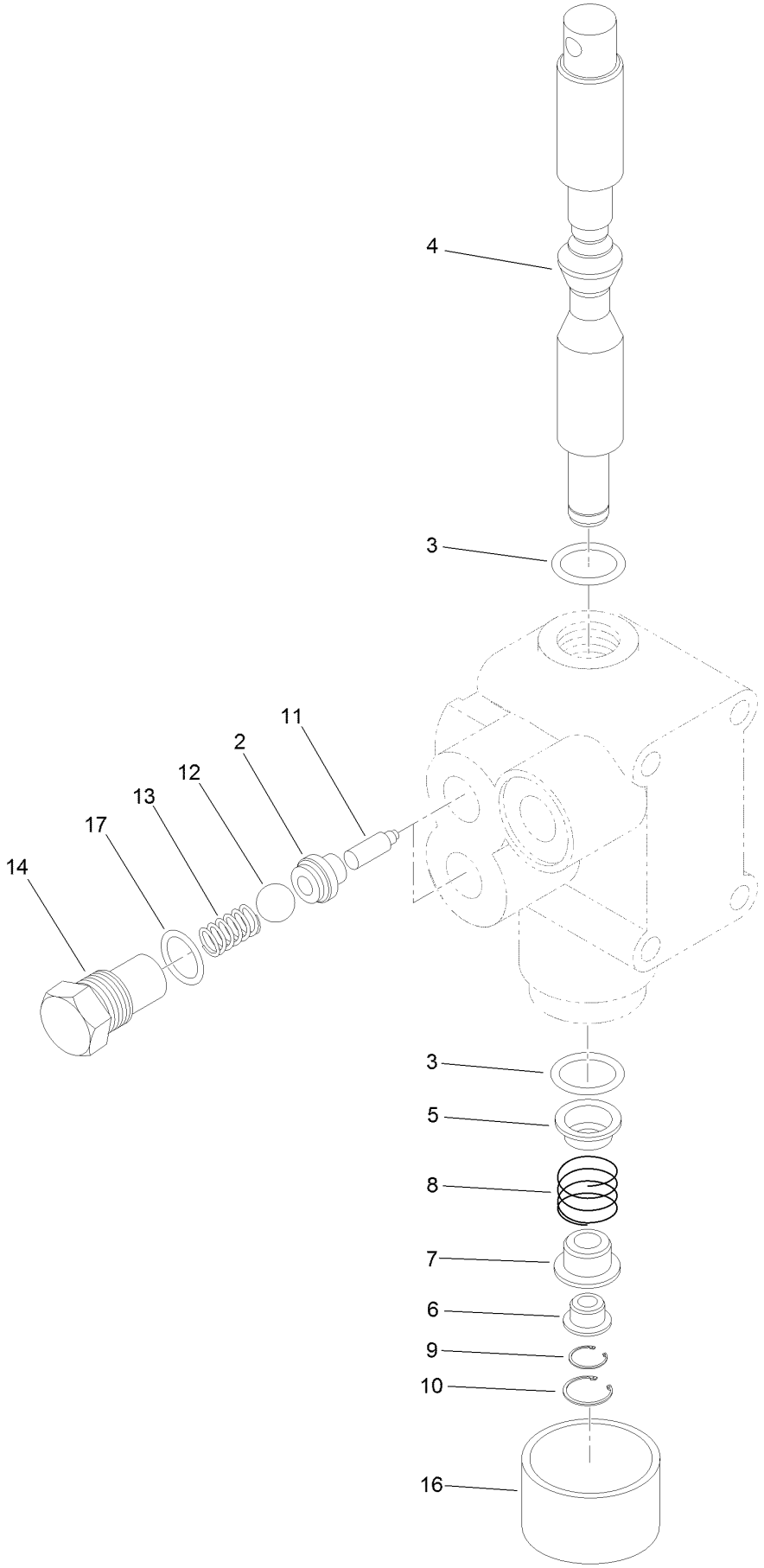

Hydraulic Valve Assembly No. 121-9070 (continued)

Ref.	Part Number	Qty.	Description
2	22-8370	2	Seat-Valve
3	22-8500	2	O-Ring
4	22-8420	1	Spool
5	22-8380	1	Retainer
6	22-8400	1	Spacer
7	22-8390	1	Retainer
8	22-8410	1	Spring
9	22-8480	1	Ring-Snap
10	22-8490	1	Ring-Snap
11	22-8360	2	Pin
12	22-8350	2	Ball
13	22-8340	2	Spring
14	22-8330	2	Plug
16	138-2229	1	Cap
17	237-42	2	O-Ring

Lift Hydraulic Routing Assembly

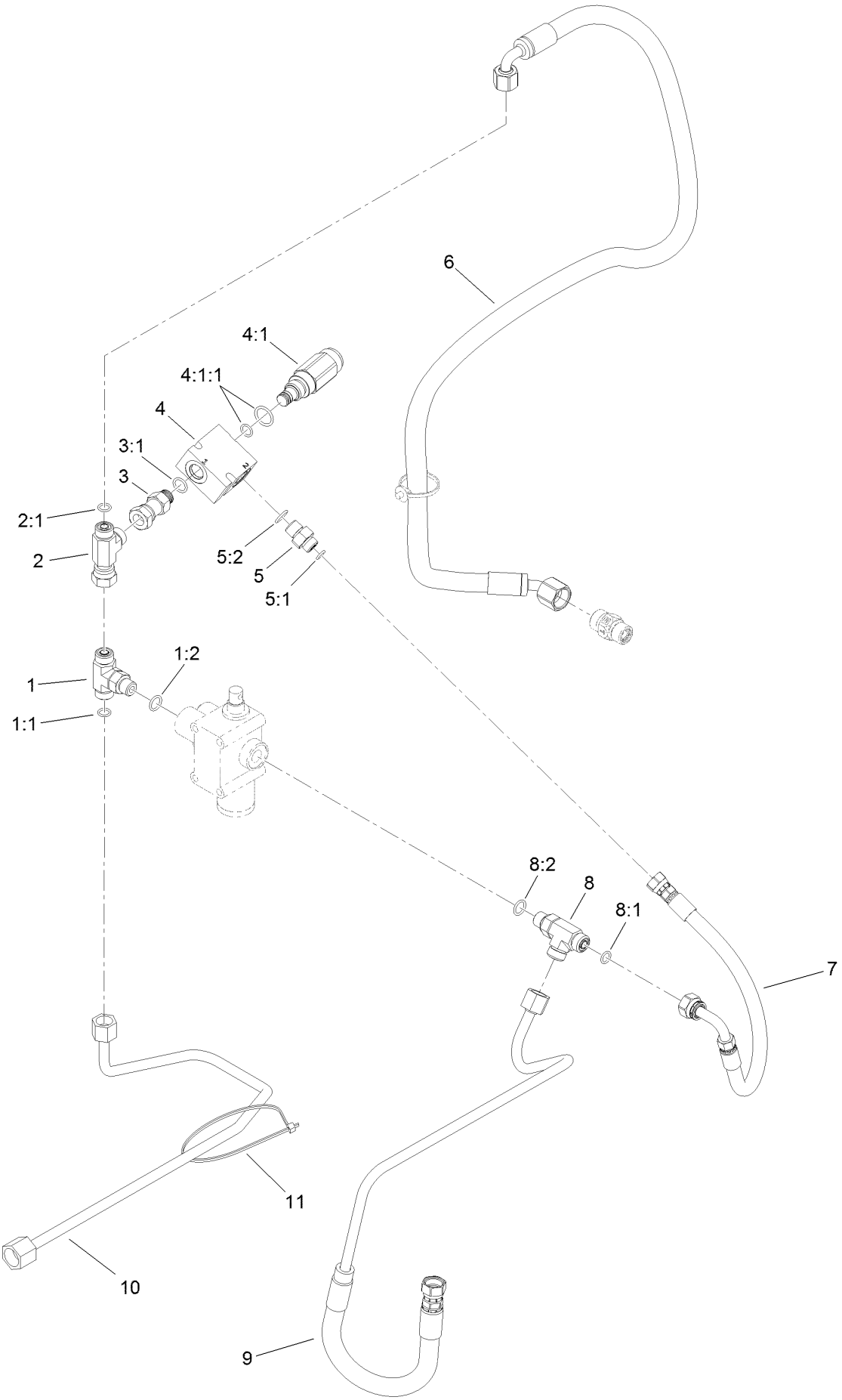

Lift Hydraulic Routing Assembly (continued)

Ref.	Part Number	Qty.	Description
1	340-94	1	Adapter
1:1	237-22	2	O-Ring
1:2	237-42	1	O-Ring
2	340-115	1	Fitting-Tee
2:1	237-22	2	O-Ring
3	104-3779	1	Connector-Swivel, Straight
3:1	237-42	1	O-Ring
4	144-1399	1	Valve-Relief
4:1	105-9155	1	Valve-Relief
4:1:1	105-9156	1	Seal Kit
5	340-1	1	Fitting-Straight

Ref.	Part Number	Qty.	Description
5:1	237-21	1	O-Ring
5:2	237-42	1	O-Ring
6	144-1367	1	HYD Hose ASM
7	115-0383	1	Hose ASM
8	340-86	1	Fitting-Tee
8:1	237-22	2	O-Ring
8:2	237-42	1	O-Ring
9	140-0293	1	Hydraulic Conductor ASM
10	140-0271	1	Hydraulic Tube ASM
11	3290-379	4	Tie-Cable

Rear Wheel Assembly

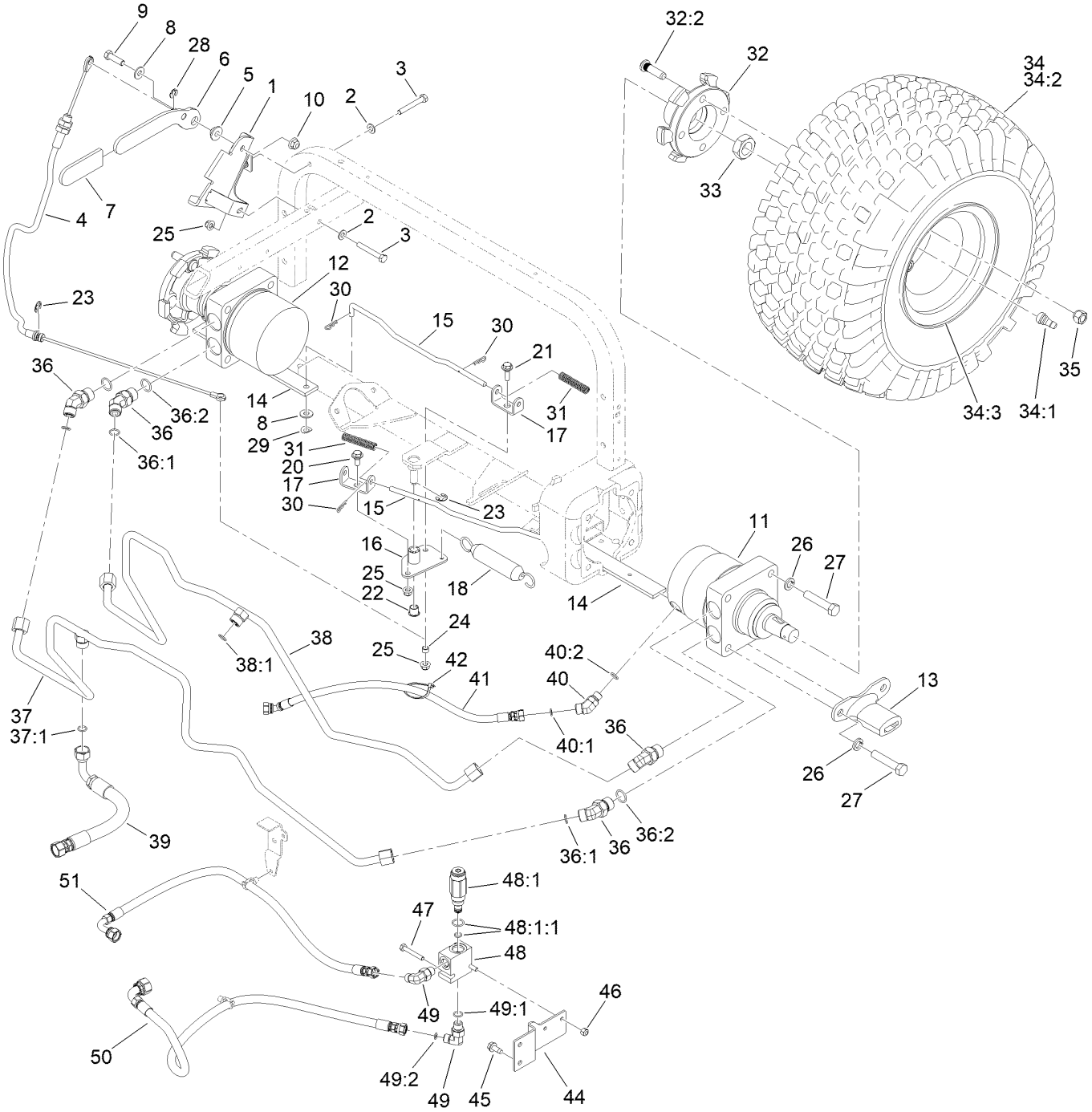

Rear Wheel Assembly (continued)

Ref.	Part Number	Qty.	Description
1	121-2520	1	Bracket-Lever, Brake
2	3256-23	2	Washer-Plain
3	322-11	2	Screw-HH
4	108-7913	1	Cable-Brake, Park
5	108-7994	1	Bushing-Pivot, Lever
6	108-7991-03	1	Lever-Brake
7	21-1880	1	Grip-Handle
8	3256-3	3	Washer-Flat
9	323-7	1	Screw-HH
10	104-8301	1	Nut-HF, NI
11	108-2947	1	HYD Motor ASM (CCW)
12	108-2949	1	HYD Motor ASM (CW)
13	125-1967	2	Bracket-Brake, Park
14	108-7986-0P	2	Bar-Latch, Parking
15	108-7987	2	Link-Latch, Parking
16	108-7979-0P	1	Bellcrank
17	114-0631	2	Clevis-Latch, Parking
18	66-4270	1	Spring-Extension
20	19-1470	1	Screw-Shoulder
21	19-1471	1	Screw-Shoulder
22	256-257	2	Bushing-Nyliner
23	32120-47	2	Ring-Retaining, External
24	108-7983	1	Bushing-Cable
25	104-8300	4	Nut-HF, NI
26	3253-7	8	Washer-Lock
27	325-10	8	Screw-HH
28	32151-47	1	Ring-Retaining
29	121-4605	2	Washer-Spring
30	3290-307	4	Pin-Cotter
31	107-3376	2	Spring-Compression
32	144-1373	2	Wheel Hub ASM
32:2	10-6830	4	Stud-Type, Drive

Ref.	Part Number	Qty.	Description
33	26-3790	2	Nut-Lock
34	95-0621	2	Wheel And Tire ASM
34:1	5108	1	Valve
34:2	85-8290	1	Tire-2Ply, Knobby
34:3	94-6116	1	Wheel-Rear
35	242-50	8	Nut-Lug
36	340-89	4	Fitting-HYD, 45 DEG
36:1	237-30	1	O-Ring
36:2	237-80	1	O-Ring
37	108-8406	1	Tube ASM
37:1	237-30	1	O-Ring
38	110-1323	1	Tube ASM
38:1	237-30	1	O-Ring
39	110-1322	1	HYD Hose ASM
40	340-87	1	Fitting-Elbow, 45 DEG
40:1	237-22	1	O-Ring
40:2	237-42	1	O-Ring
41	140-0269	1	HYD Hose ASM
42	3290-379	1	Tie-Cable
44	108-8460-01	1	Bracket-Valve
45	32144-11	2	Screw-HWH
46	3296-42	2	Nut-Lock, NI
47	321-10	2	Screw-HH
48	144-1391	1	Valve-Relief
48:1	144-1398	1	Valve-Relief
48:1:1	105-9156	1	Seal Kit
49	340-82	2	Fitting-Elbow, 90 DEG
49:1	237-42	1	O-Ring
49:2	237-21	1	O-Ring
50	144-1394	1	HYD Hose ASM
51	144-1395	1	HYD Hose ASM

Hydraulic Motor Assembly No. 108-2947

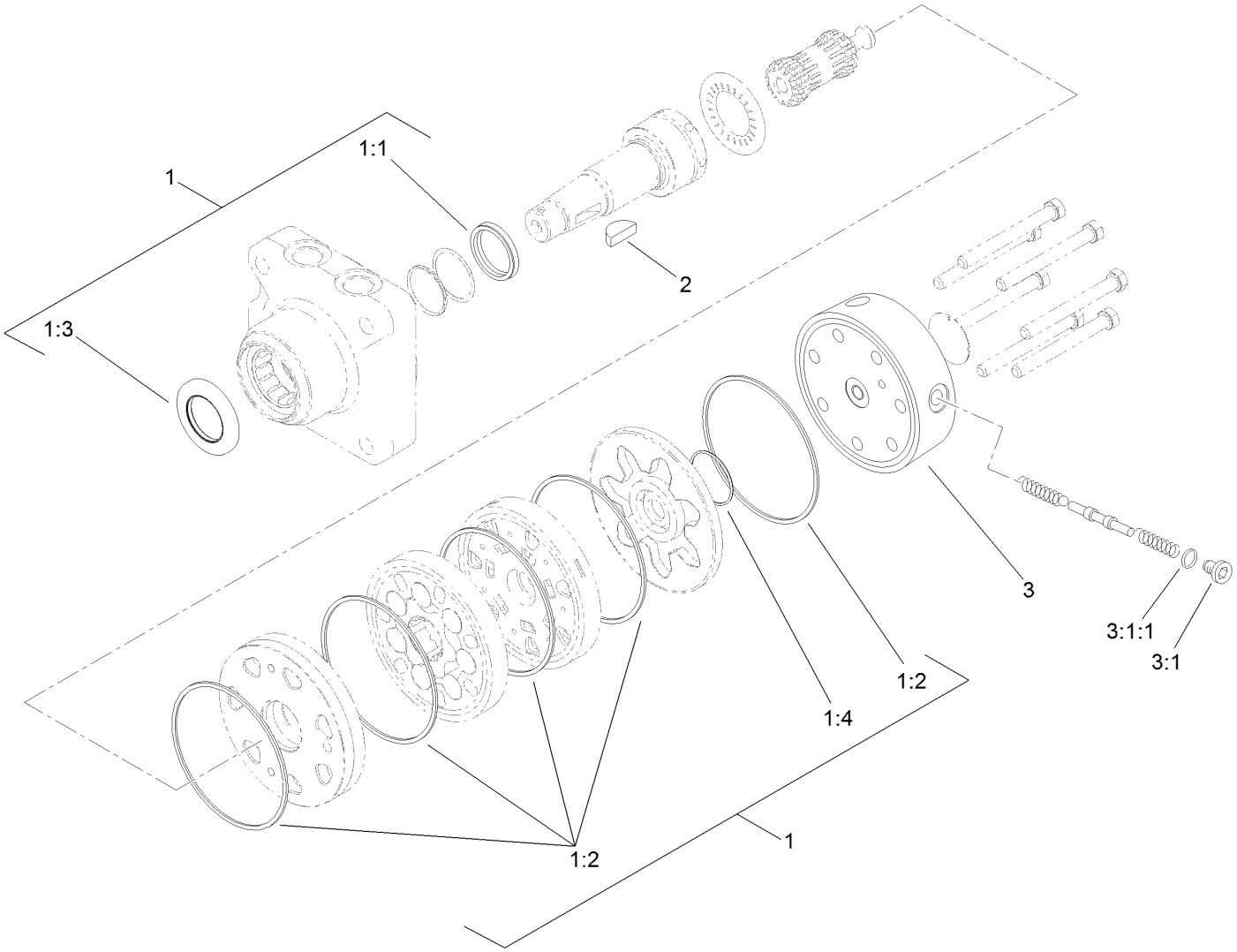

Hydraulic Motor Assembly No. 108-2947 (continued)

Ref.	Part Number	Qty.	Description
1	110-6459	1	Seal Kit
1:1		1	Seal-Shaft ●
1:2		5	Seal-Body ●
1:3		1	Seal-Dirt/Water ●
1:4		1	Seal-Commutator ●

Ref.	Part Number	Qty.	Description
2	3257-42	1	Key-Woodruff
3	110-3381	1	End Cover ASM
3:1	353-990	1	Plug ASM
3:1:1	237-78	1	O-Ring

● Not serviced separately

Hydraulic Motor Assembly No. 108-2949

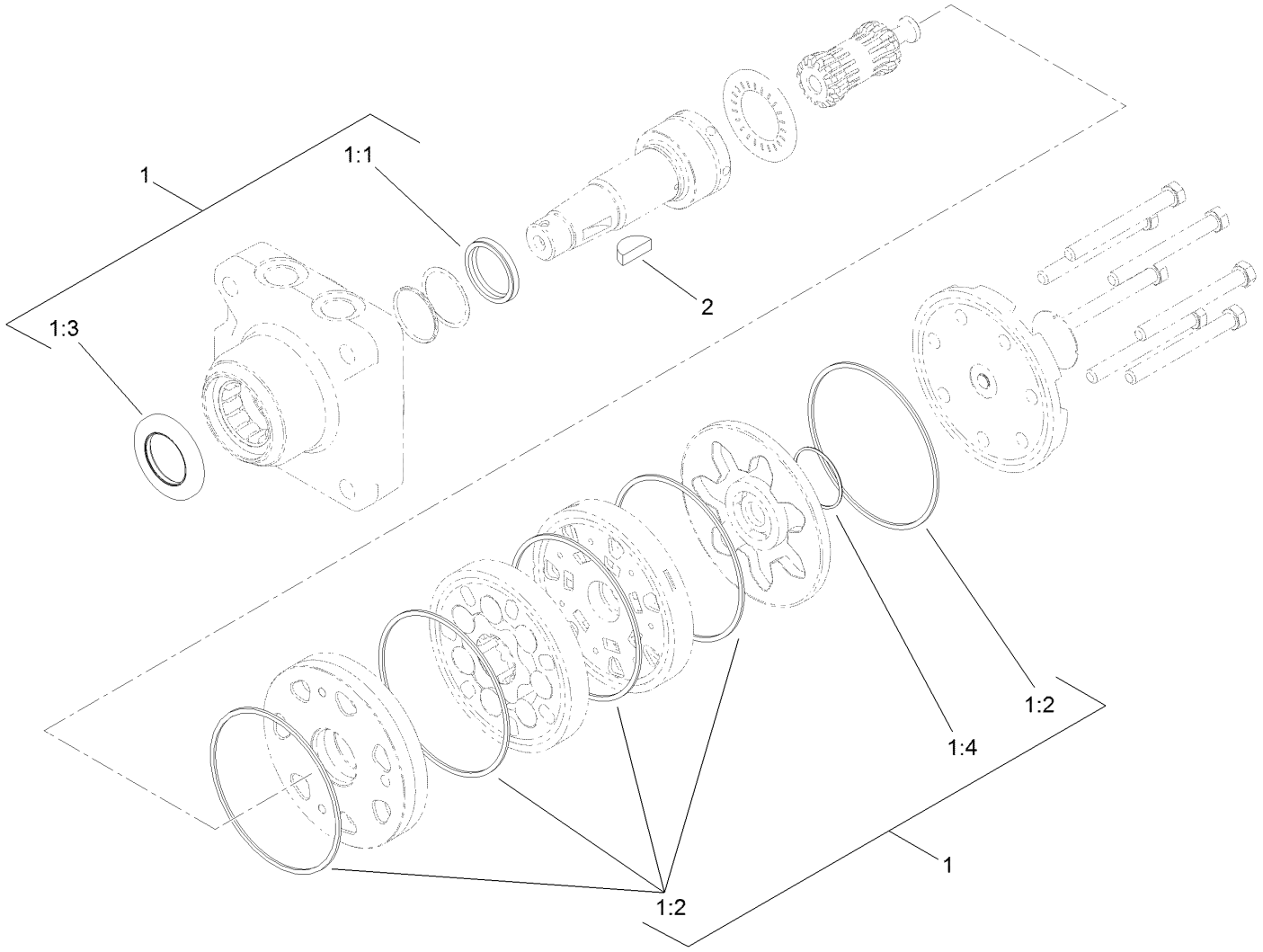

Hydraulic Motor Assembly No. 108-2949 (continued)

Ref.	Part Number	Qty.	Description
1	110-6459	1	Seal Kit
1:1		1	Seal-Shaft ●
1:2		5	Seal-Body ●
1:3		1	Seal-Dirt/Water ●
1:4		1	Seal-Commutator ●
2	3257-42	1	Key-Woodruff

● Not serviced separately

Front Wheel Assembly

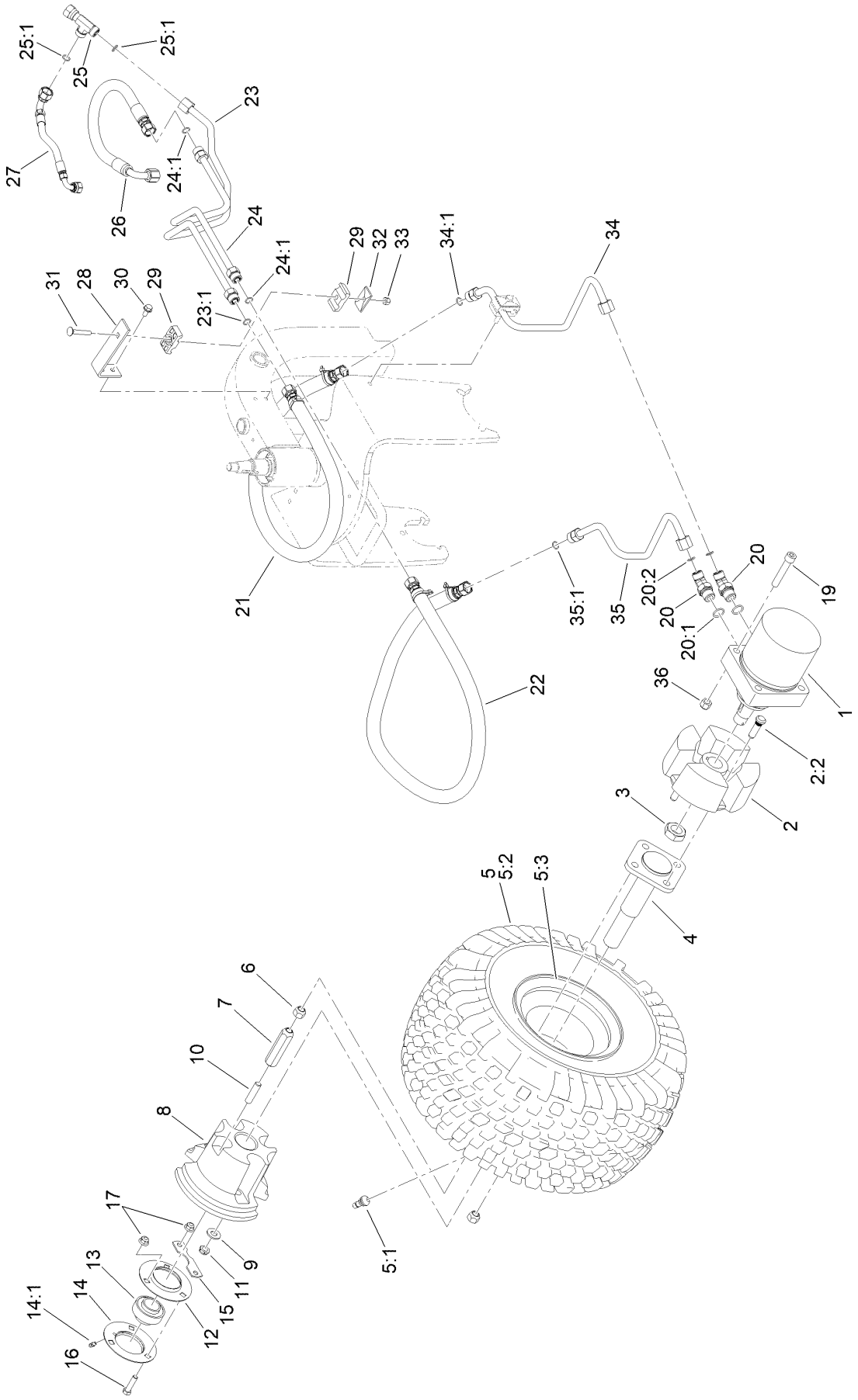

Front Wheel Assembly (continued)

Ref.	Part Number	Qty.	Description
1	108-2948	1	HYD Motor ASM (CW)
2	144-1381	1	Front Wheel Hub ASM
2:2	10-6830	4	Stud-Type, Drive
3	26-3790	1	Nut-Lock
4	110-6314	1	Spindle
5	95-0621	1	Wheel And Tire ASM
5:1	5108	1	Valve
5:2	85-8290	1	Tire-2Ply, Knobby
5:3	94-6116	1	Wheel-Rear
6	242-50	2	Nut-Lug
7	107-3399	2	Adapter-Weight, Wheel
8	110-6312-03	1	Weight
9	87-7270	2	Washer-Thrust
10	110-6311	2	Stud
11	3296-45	2	Nut-Hex
12	85-8950	1	Flangette-Standard
13	251-352	1	Bearing
14	85-8940	1	Flangette-Relube
14:1	302-5	1	Fitting-Grease
15	88-8350	1	Tab-Bearing
16	323-8	3	Screw-HH
17	104-8301	3	Nut-HF, NI
19	3274-93	2	Screw-HSH
20	340-89	2	Fitting-HYD, 45 DEG
20:1	237-30	1	O-Ring
20:2	237-80	1	O-Ring
21	108-8433	1	HYD Hose ASM
22	110-6303	1	HYD Hose ASM
23	140-0315	1	Hydraulic Tube ASM
23:1	237-30	1	O-Ring
24	108-8411	1	Tube ASM
24:1	237-30	2	O-Ring
25	340-104	1	Fitting-Tee
25:1	237-30	2	O-Ring
26	140-0323	1	HYD Hose ASM
27	144-1393	1	HYD Hose ASM
28	108-8455-01	1	Bracket-Clamp
29	56-7976	2	Clamp-Tube
30	32144-14	2	Screw-HWHTF
31	3230-6	1	Bolt-CARR
32	69-9760	1	Plate-Cover
33	3296-29	1	Nut-Lock, NI
34	108-8432	1	Tube ASM
34:1	237-30	1	O-Ring
35	108-8431	1	Tube ASM
35:1	237-30	1	O-Ring
36	3296-23	2	Nut-Lock, NI

Hydraulic Motor Assembly No. 108-2948

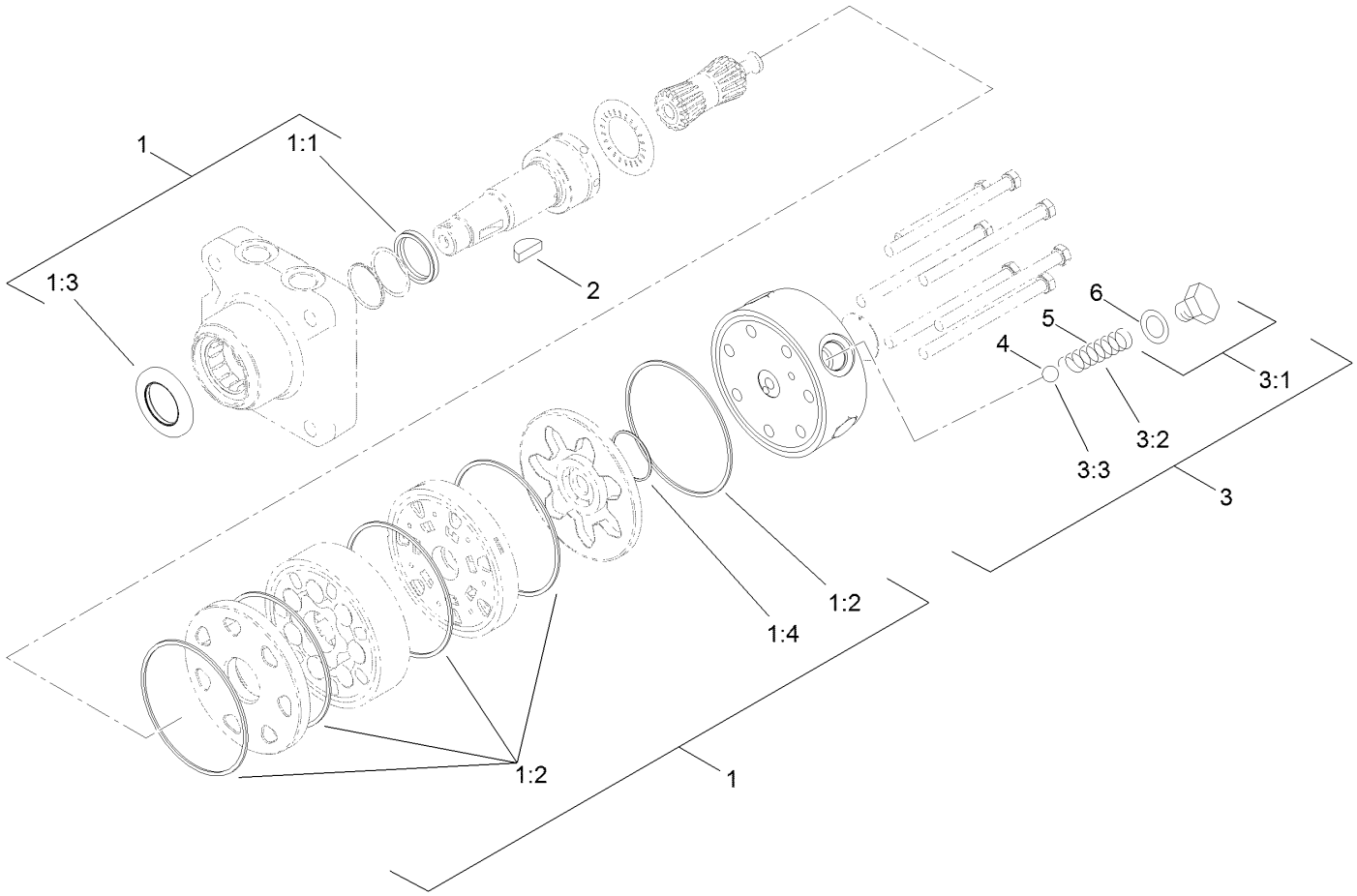

Hydraulic Motor Assembly No. 108-2948 (continued)

Ref.	Part Number	Qty.	Description
1	110-6459	1	Seal Kit
1:1		1	Seal-Shaft ●
1:2		5	Seal-Body ●
1:3		1	Seal-Dirt/Water ●
1:4		1	Seal-Commutator ●
2	3257-42	1	Key-Woodruff
3	99-3538	1	End Cover ASM
3:1		1	Spring Cap And O-Ring ASM ●
3:2	99-3541	1	Spring
3:3	99-3540	1	Ball
4	99-3540	1	Ball
5	99-3541	1	Spring
6	132-4421	1	O-Ring

● Not serviced separately

Steering Assembly

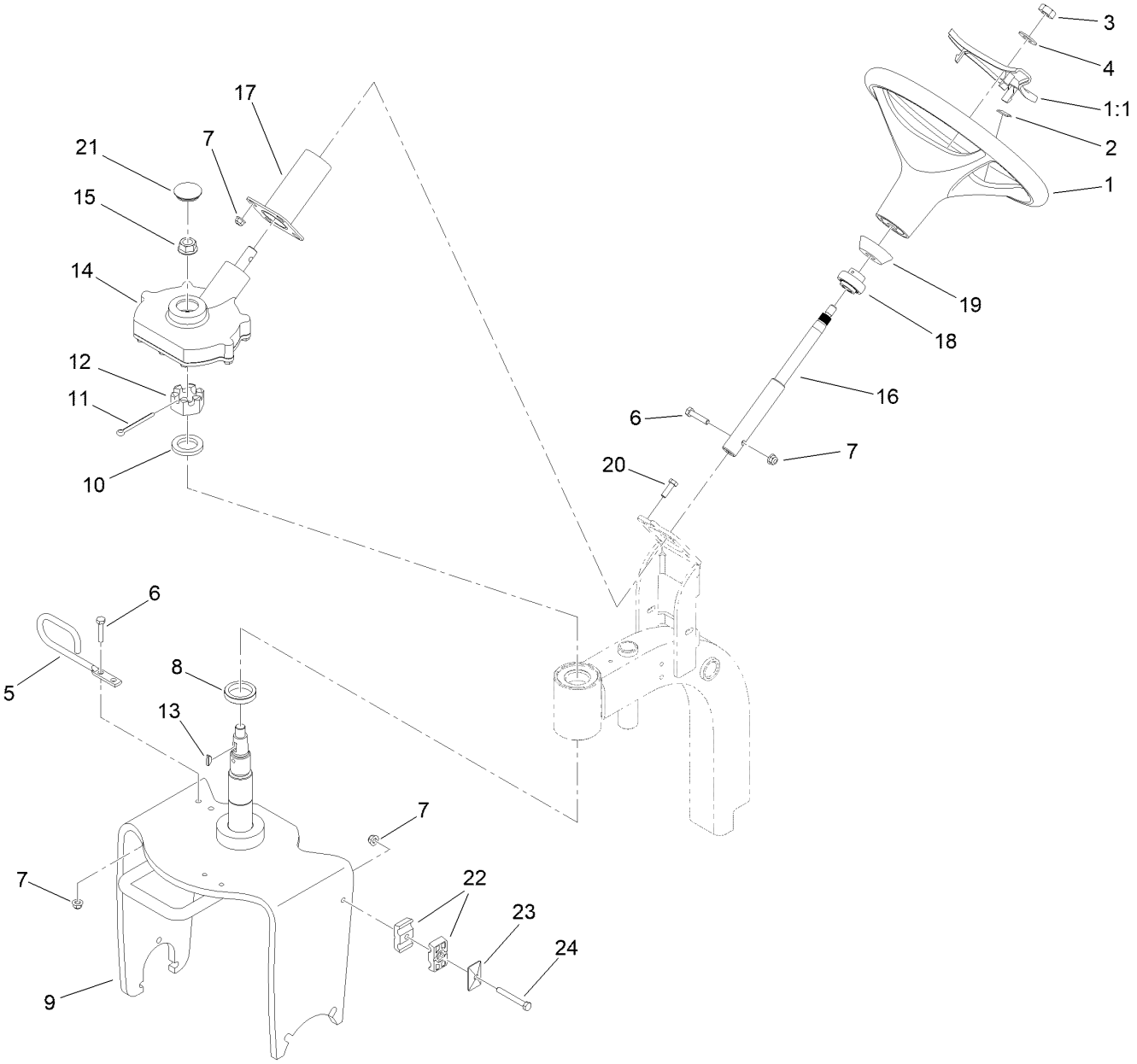

Steering Assembly (continued)

Ref.	Part Number	Qty.	Description
1	98-1471	1	Wheel-Steering
1:1	98-1468	1	Cover-Wheel, Steering
2	98-1459	1	Decal
3	3296-33	1	Nut-Lock, NI
4	3256-27	1	Washer-Flat
5	138-9139	1	Guide-Hose
6	322-7	3	Screw-HH
7	104-8300	8	Nut-HF, NI
8	108-5432	1	Spacer-Bearing
9	107-3543-01	1	Fork ASM
10	115-5639	1	Washer-Steering
11	3272-37	1	Pin-Cotter
12	32136-9	1	Nut-Hex, Slotted
13	3257-5	1	Key-Woodruff
14	107-3526	1	Steering Box ASM
15	32128-54	1	Nut-HF
16	107-3533	1	Shaft-Steering
17	107-3540-03	1	Tube
18	106-8448	1	Bearing-Race, Extended
19	93-5429	1	Collar-Foam
20	322-5	4	Screw-HH
21	107-3532	1	Grommet
22	56-7976	2	Clamp-Tube
23	69-9760	1	Plate-Cover
24	322-12	1	Screw-HH

Steering Box Assembly No. 107-3526

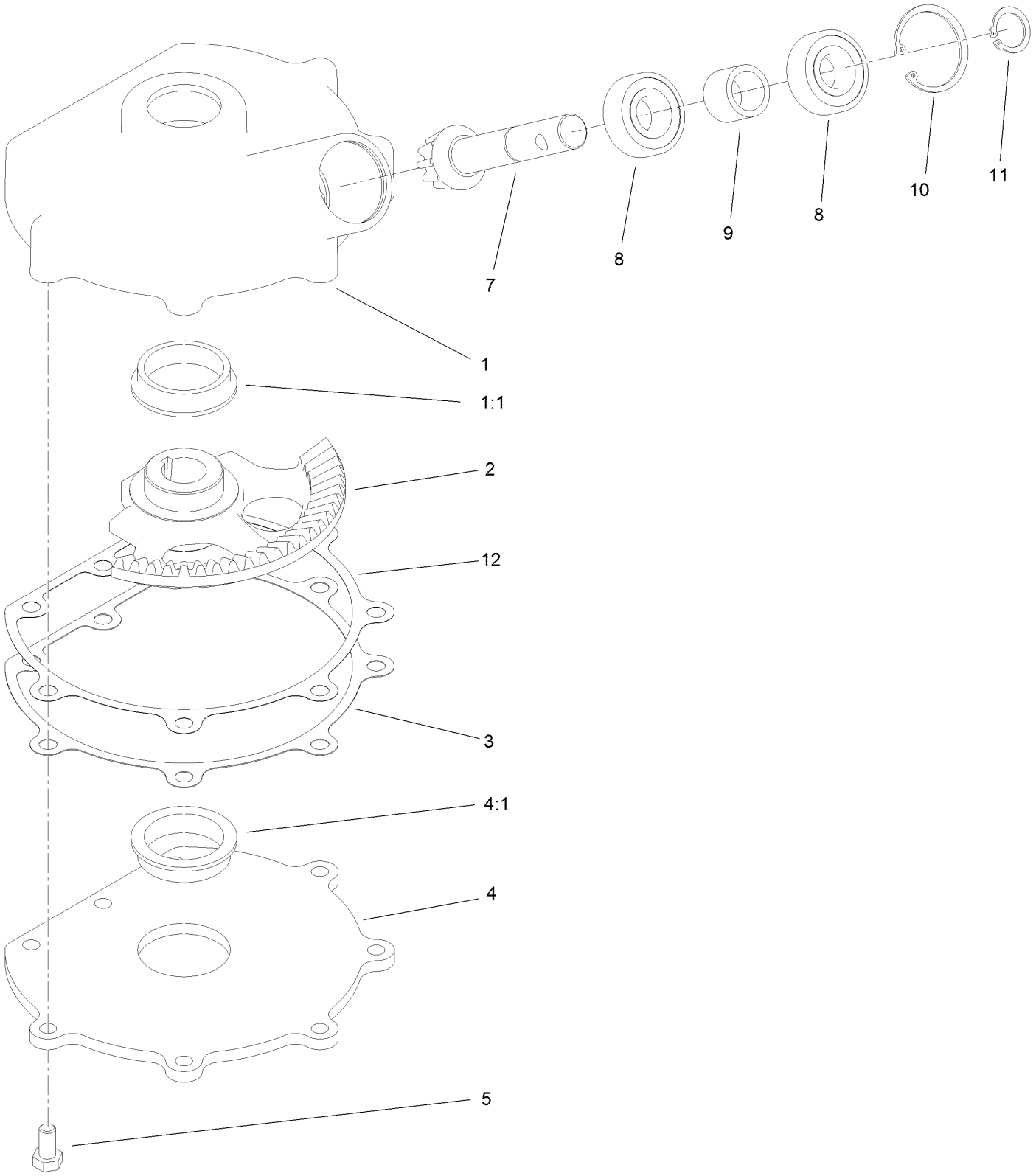

Steering Box Assembly No. 107-3526 (continued)

Ref.	Part Number	Qty.	Description
1	108-4520	1	Steering Cover ASM
1:1	92-6869	1	Bushing
2	107-3520	1	Gear-Sector
3	107-3529	1	Gasket-Steering
4	107-3524	1	Steering Plate ASM
4:1	92-6869	1	Bushing
5	322-2	8	Screw-HH

Ref.	Part Number	Qty.	Description
7	107-3527	1	Gear-Pinion
8	38-7820	2	Bearing-Ball
9	108-4502	1	Spacer
10	107-3530	1	Ring-Retaining
11	32151-12	1	Ring-Retaining
12	108-8442	3	Shim-Plate, Steering

Engine Installation Assembly

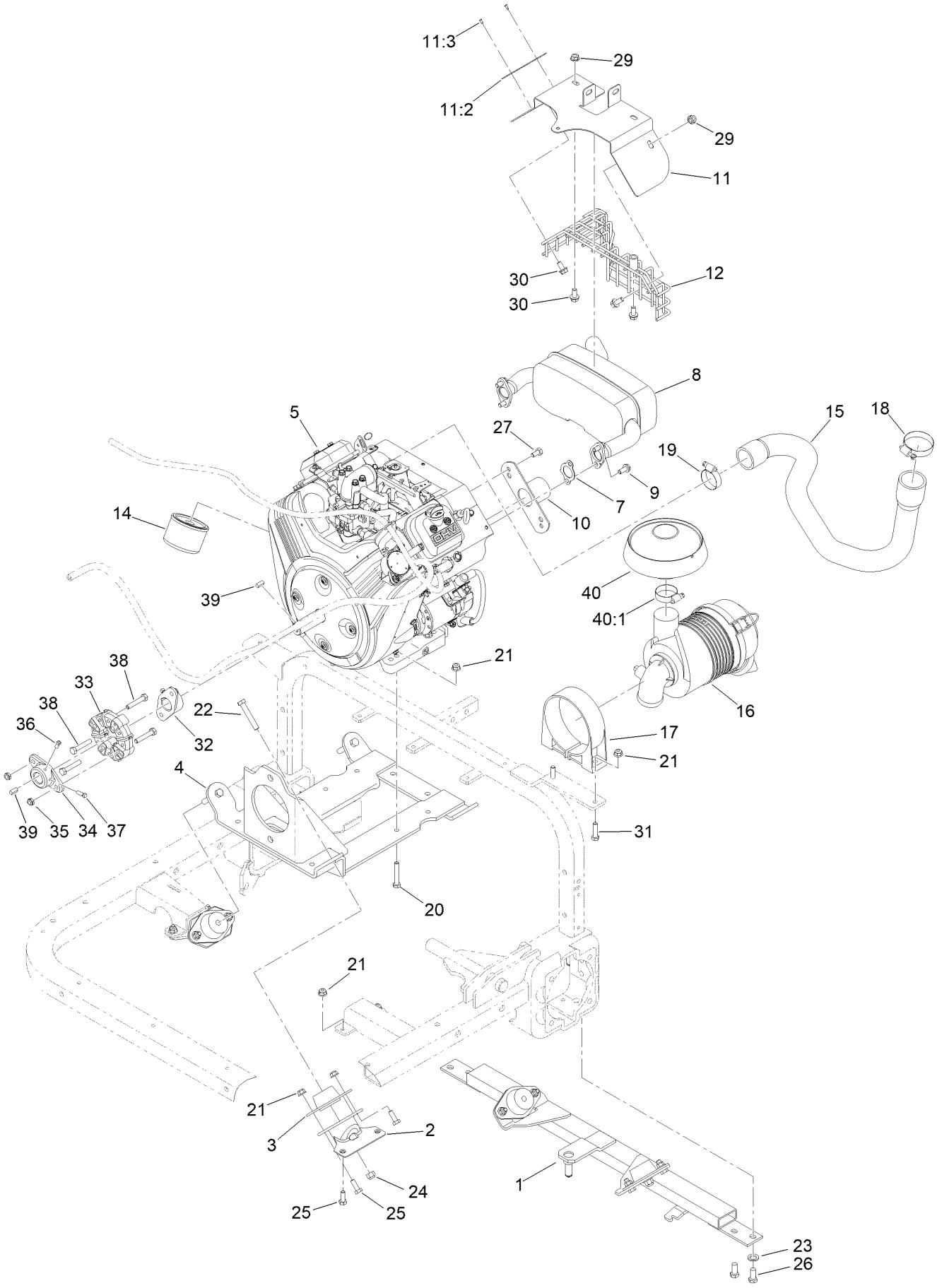

Engine Installation Assembly (continued)

Ref.	Part Number	Qty.	Description
1	120-3461-01	1	Mount-Engine
2	125-1954	2	Mount-Front
3	121-9076	4	Mount-Engine
4	108-2809-0P	1	Support-Engine
5	140-0282	1	Engine ●
7	94-3449	2	Gasket-Manifold, Exhaust
8	120-3476	1	Muffler-Dual Inlet
9	94-5300	4	Screw-HHF
10	95-0632-03	1	Cover
11	119-7191	1	Muffler Shield ASM
11:2	95-0645	1	Plate-Surface, Hot
11:3	3269-32	2	Rivet-Pop
12	110-6348-03	1	Shield-Exhaust
14	107-7817	1	Filter-Oil, Engine
15	117-9576	1	Hose-Air
16	93-2190	1	Air Cleaner ASM
17	95-5806	1	Bracket-Mounting, Air Cleaner
18	2412-92	1	Clamp-Hose
19	2412-3	1	Clamp-Hose
20	322-10	4	Screw-HH
21	104-8300	18	Nut-HF, NI
22	323-11	4	Screw-HH
23	3256-24	4	Washer-Plain
24	104-8301	4	Nut-HF, NI
25	322-4	12	Screw-HH
26	323-5	4	Screw-HH
27	3210-2	2	Screw-HH
29	32128-25	4	Nut-HF
30	3234-14	4	Screw-HHF
31	322-6	2	Screw-HH
32	110-5236	1	Hub-Engine
33	119-0652	1	Coupler-Rubber
34	110-5227	1	Hub-Pump
35	3296-47	4	Nut-Lock,NI
36	3241-7	2	Screw-SQH
37	3241-6	2	Screw-SQH
38	322-9	4	Screw-HH
39	85-9020	2	Key-Square
40	136-7859	1	Rain Cap Kit
40:1	1-643009	1	Clamp-Hose

● Obtain parts from www.briggsandstratton.com

Air Cleaner Assembly No. 93-2190

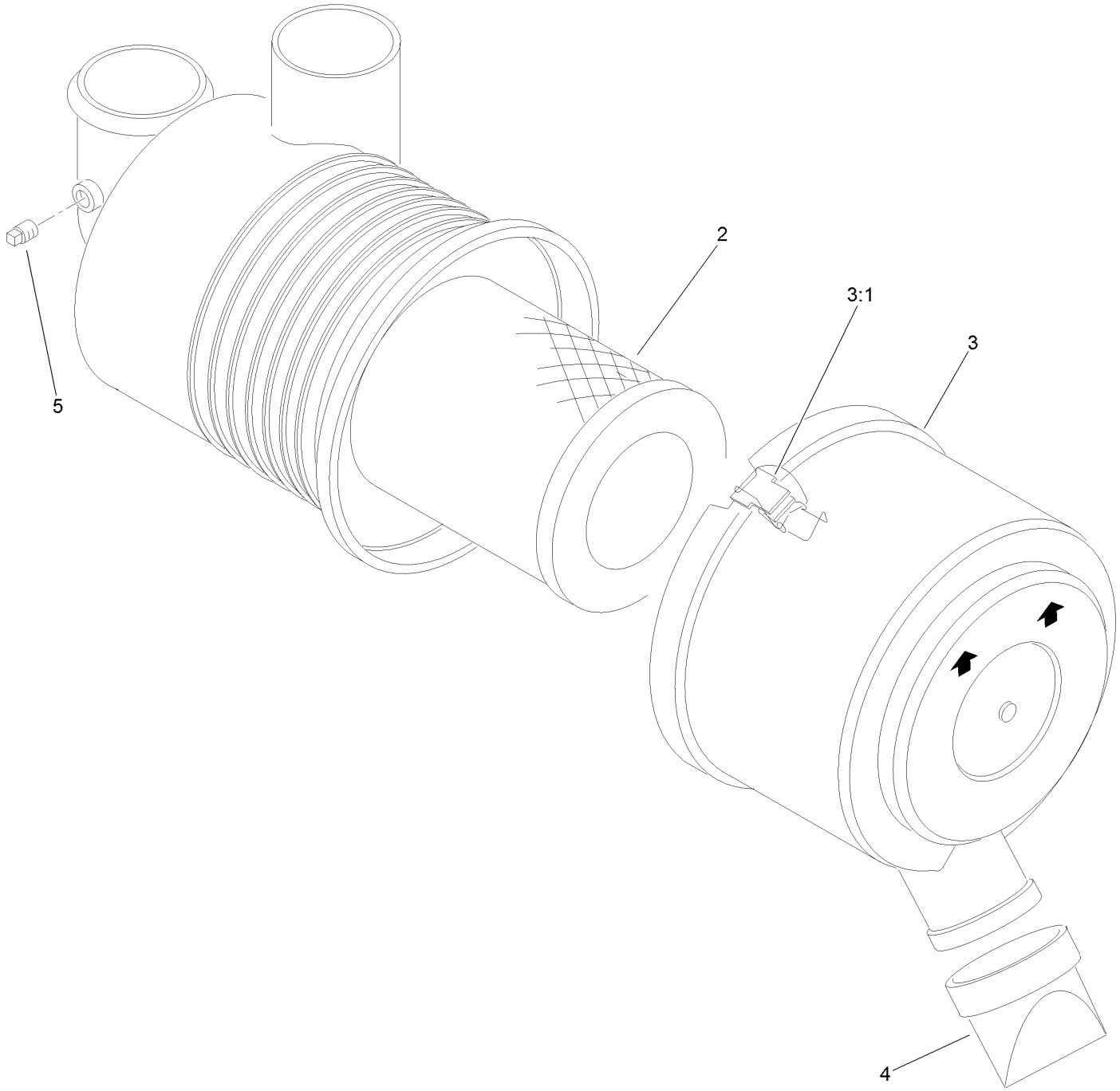

Air Cleaner Assembly No. 93-2190 (continued)

Ref.	Part Number	Qty.	Description
2	108-3811	1	Filter-Air
3	94-3652	1	Cover ASM
3:1	1-643283	2	Latch-Cleaner, Air
4	87-9400	1	Valve-Vacuator
5	285-17	1	Plug-Pipe

Electrical and Console Assembly

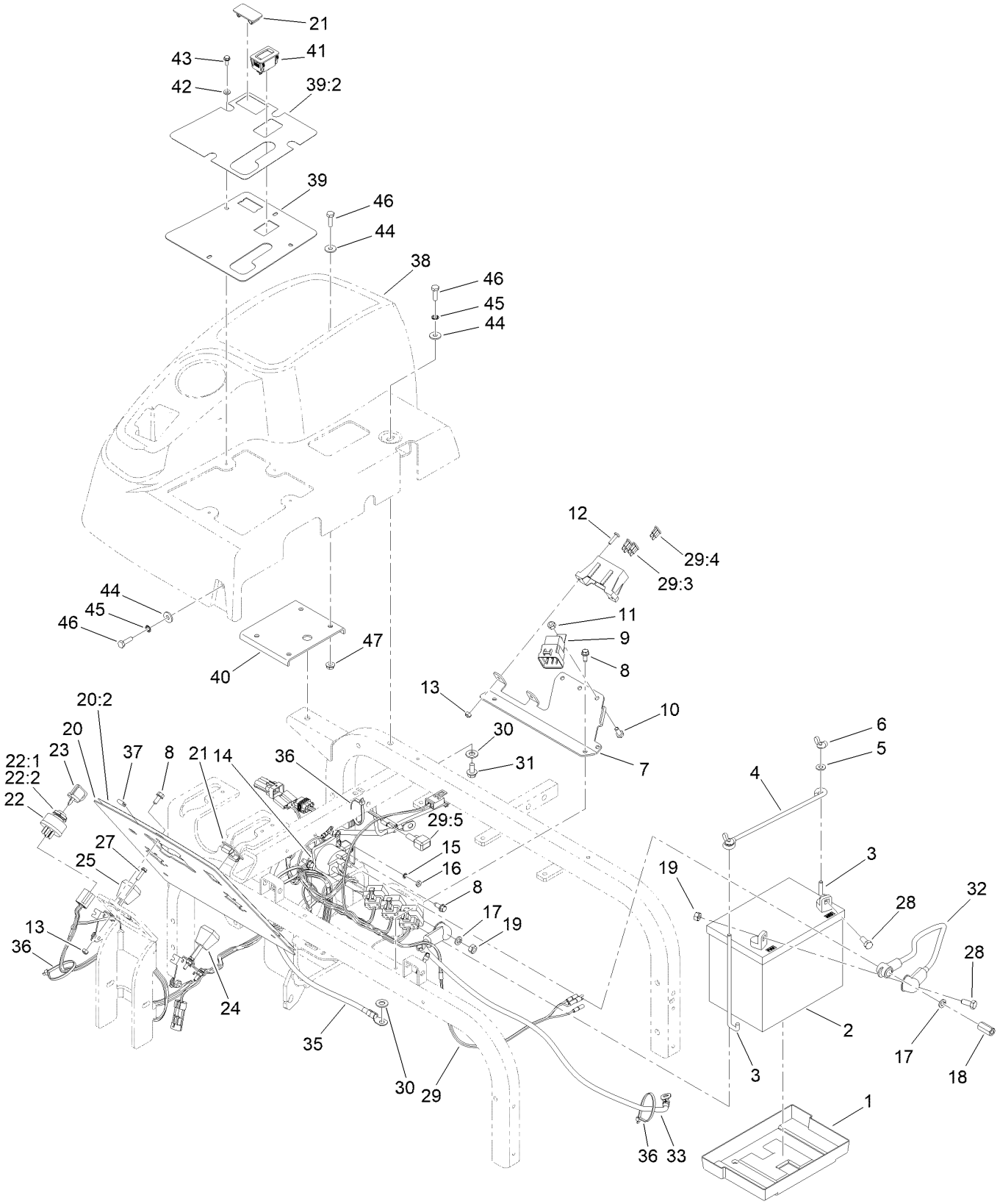

Electrical and Console Assembly (continued)

Ref.	Part Number	Qty.	Description
1	106948	1	Tray-Battery
2	99-7421	1	Battery- Wet, 12V, 300 CCA
3	100-6435	2	Post-Battery
4	100-6434	1	Rod-Hold Down, Battery
5	3256-22	2	Washer-Flat
6	32103-22	2	Nut-Wing
7	112-1444-01	1	Bracket-Relay
8	32144-10	7	Screw-HWH
9	99-7430	3	Relay-Mini
10	321-3	3	Screw-HH
11	3296-42	3	Nut-Lock, NI
12	3250-13	2	Screw-PPH
13	3296-2	6	Nut-Lock, NI
14	28-4210	1	Solenoid
15	3254-1	1	Washer-Lock, Int
16	3219-14	1	Nut-Hex
17	3253-4	2	Washer-Lock
18	110-3380	1	Nut-Standoff
19	3218-13	3	Nut-Jam, Brass
20	137-3388	1	Control Panel ASM
20:2	137-3387	1	Decal-Dash
21	99-7420	2	Plug-Hole
22	83-0020	1	Switch-Ignition
22:1	218-461	1	Nut-HH
22:2	3254-5	1	Washer-Lock
23	63-8360	2	Key-Ignition

Ref.	Part Number	Qty.	Description
24	119-7178	1	Choke Cable ASM
25	147-3652	1	Cable ASM
27	32105-13	4	Screw-HWH
28	322-3	2	Screw-HH
29	122-1403	1	Harness-Wire
29:3	218-578	2	Fuse-Blade, 10 Amp
29:4	109101	1	Fuse-Blade, 20 Amp
29:5	100-4918	2	Diode
30	3256-23	2	Washer-Plain
31	32144-14	1	Screw-HWHTF
32	110-3314	1	Cable-Positive, Battery
33	110-3315	1	Cable-Positive, Starter
35	54-3093	1	Cable-Battery, Negative
36	3290-378	6	Tie-Cable
37	119-2494	1	Seal-Strip
38	108-2936	1	Console
39	140-0320	1	Lift Panel W/Decal
39:2	108-8484	1	Decal-Lift, Rear
40	108-7995-03	1	Plate-Support, Console
41	120-2244	1	Hourmeter
42	3256-51	4	Washer-Flat
43	3290-321	4	Screw-HWH
44	3256-78	7	Washer-Flat
45	3254-8	3	Washer-Lock
46	321-5	7	Screw-HH
47	32128-33	4	Nut-HF

Attachments and Accessories

For 08743 Sand Pro 3040 Traction Unit

Product Name	Model/Part
Wheel and Tire Assembly	121-9077
Midmount Toolbar System	08838
Tooth Rake	08751
Spring Rake	08752
Rear Broom	08753
Finish Grader	08754
Manual Blade	08714
Spiker	08755
Drag Mat Carrier System	08756
Wireless Hourmeter	115-4754
Rear Remote Hydraulic Kit	08781
QAS Nail Drag	08761
QAS Bunker Pump	08765
LED Light Kit	08740
QAS Flex Tooth Rake	08767
Draw Bar Hitch Assembly	110-1375
Smooth Wheel and Tire Assembly	112-0034
Drag Mat Assembly	112-1424
Speed Limiter Kit	110-1371
Spark Arrestor Screen	119-7185
Arm Rest Kit	139-5823
Yellow Hydraulic Cap	107-1576
Yellow Hydraulic Fluid Cap (Tethered)	107-2174
Premium Engine Oil SAE 30 (Drum)	108-1196
Premium Engine Oil SAE 30 (Pail)	108-1197
Infield Pro 3040 Decal Kit	115-5619
PX Hydraulic Fluid (55 Gal)	133-8087
MVP Kit 1000 Hour	44957
PX Hydraulic Fluid (5 Gal)	133-8086
MVP Filter Kit	30035
Variable Orifice Kit	112-1433
Premium All Purpose Grease (Tube)	108-1190
Semi-Gloss Black Spray Paint	361-9
Dark Metallic Gray Aerosol Paint	361-12
New Red Paint - Gallon	361-11
Air Dry Red Paint - Qt	5340

Notes:

Notes:

Notes:

TORO®

Count on it.