Form No. 3466-628 Rev A

Count on it.

Operator's Manual

Greensmaster® TriFlex® 3320 Traction Unit

Model No. 04530—Serial No. 417000000 and Up

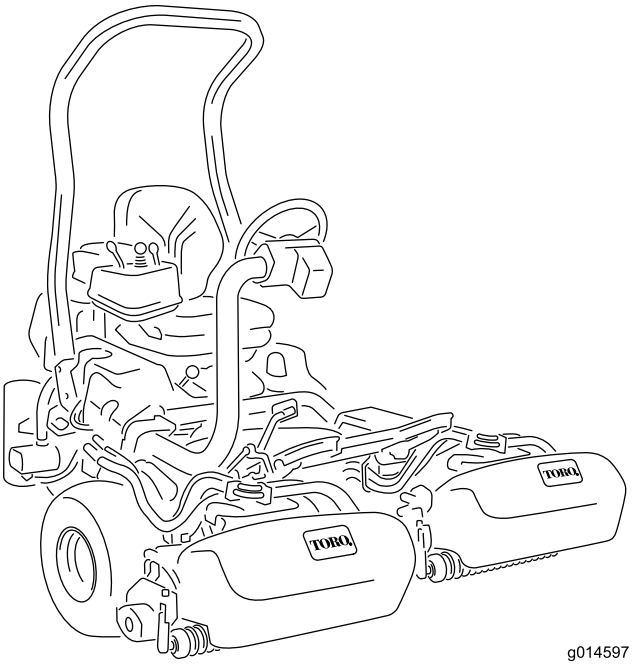

g014597

Register at www.Toro.com.
Original Instructions (EN)

3466-628

This product complies with all relevant European directives; for details, please see the separate product specific Declaration of Conformity (DOC) sheet.

It is a violation of California Public Resource Code Section 4442 or 4443 to use or operate the engine on any forest-covered, brush-covered, or grass-covered land unless the engine is equipped with a spark arrester, as defined in Section 4442, maintained in effective working order or the engine is constructed, equipped, and maintained for the prevention of fire.

The enclosed engine owner's manual is supplied for information regarding the US Environmental Protection Agency (EPA) and the California Emission Control Regulation of emission systems, maintenance, and warranty. Replacements may be ordered through the engine manufacturer.

⚠ WARNING

CALIFORNIA
Proposition 65 Warning

The engine exhaust from this product contains chemicals known to the State of California to cause cancer, birth defects, or other reproductive harm.

Battery posts, terminals, and related accessories contain lead and lead compounds, chemicals known to the State of California to cause cancer and reproductive harm. Wash hands after handling.

Use of this product may cause exposure to chemicals known to the State of California to cause cancer, birth defects, or other reproductive harm.

Introduction

This machine is a ride-on, reel-blade greens mower intended to be used by professional, hired operators in commercial applications. It is primarily designed for cutting grass on well-maintained turf. Using this product for purposes other than its intended use could prove dangerous to you and bystanders.

Read this information carefully to learn how to operate and maintain your product properly and to avoid injury and product damage. You are responsible for operating the product properly and safely.

Visit www.Toro.com for more information, including safety tips, training materials, accessory information, help finding a dealer, or to register your product.

Whenever you need service, genuine Toro parts, or additional information, contact an authorized Toro distributor and have the model and serial numbers of your product ready. Figure 1 identifies the location of the model and serial numbers on the product. Write the numbers in the space provided.

Important: **With your mobile device, you can scan the QR code on the serial number decal (if equipped) to access warranty, parts, and other product information.**

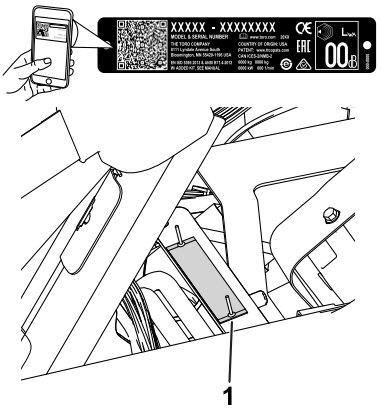

g233264

Figure 1

1. Model and serial number location—lift the seat and locate the serial plate.

Model No. _____

Serial No. _____

This manual identifies potential hazards and has safety messages identified by the safety-alert symbol (Figure 2), which signals a hazard that may cause serious injury or death if you do not follow the recommended precautions.

g000502

Figure 2
Safety-alert symbol

This manual uses 2 words to highlight information. **Important** calls attention to special mechanical information and **Note** emphasizes general information worthy of special attention.

© 2024—The Toro® Company
8111 Lyndale Avenue South
Bloomington, MN 55420

Contact us at www.Toro.com.
Printed in the USA
All Rights Reserved

Contents

Safety 4
General Safety 4
Safety and Instructional Decals 5
Setup 9
1 Installing the Roll Bar 10
2 Installing the Seat 10
3 Installing the Steering Wheel 11
4 Charging the Battery 11
5 Installing the Oil Cooler 12
6 Installing the Grass-Basket Hooks 12
7 Installing the Cutting Units 12
8 Setting the Clip-Control Feature 13
9 Adding Rear Weight 13
10 Installing the CE Decals 13
11 Reducing the Tire Pressure 14
12 Burnishing the Brakes 14
Product Overview 15
Controls 15
InfoCenter Control 17
Specifications 23
Attachments/Accessories 23
Before Operation 24
Before Operation Safety 24
Fuel Specification 24
Filling the Fuel Tank 25
Performing Daily Maintenance 25
During Operation 25
During Operation Safety 25
Breaking in the Machine 26
Starting the Engine 26
Checking the Machine after Starting the Engine 27
Shutting Off the Engine 27
Checking the Safety-Interlock System 27
Driving the Machine without Mowing 28
Mowing the Green 28
After Operation 30
After Operation Safety 30
Towing the Machine 31
Inspecting and Cleaning after Mowing 31
Hauling the Machine 31
Maintenance 32
Maintenance Safety 32
Recommended Maintenance Schedule(s) 33
Daily Maintenance Checklist 34
Lubrication 35
Greasing the Machine 35
Engine Maintenance 35
Engine Safety 35
Servicing the Air Cleaner 35
Servicing the Engine Oil 36
Replacing the Spark Plugs 37
Fuel System Maintenance 37
Replacing the Fuel Filter 37
Inspecting the Fuel Lines and Connections 37
Electrical System Maintenance 38
Electrical System Safety 38
Disconnecting the Battery 38
Connecting the Battery 38
Charging the Battery 39
Locating the Fuses 40
Jump-Starting the Machine 40
Drive System Maintenance 41
Checking the Tire Pressure 41
Checking the Torque of the Wheel Nuts 41
Adjusting the Transmission for Neutral 41
Adjusting the Transport Speed 41
Adjusting the Mowing Speed 42
Brake Maintenance 43
Burnishing the Brakes 43
Adjusting the Brakes 43
Hydraulic System Maintenance 43
Hydraulic System Safety 43
Servicing the Hydraulic Fluid 43
Checking the Hydraulic Lines and Hoses 45
Checking the Leak Detector 45
Cutting Unit Maintenance 47
Blade Safety 47
Installing and Removing the Cutting Units 47
Checking the Reel-to-Bedknife Contact 50
Backlapping the Reels 51
Storage 52
Storage Safety 52
Preparing the Machine for Storage 52

Safety

General Safety

This product is capable of amputating hands and feet and of throwing objects.

- Read and understand the contents of this *Operator's Manual* before starting the engine.
- Use your full attention while operating the machine. Do not engage in any activity that causes distractions; otherwise, injury or property damage may occur.
- Do not put your hands or feet near moving components of the machine.
- Do not operate the machine without all guards and other safety protective devices in place and functioning properly on the machine.
- Keep bystanders and children out of the operating area. Never allow children to operate the machine.
- Shut off the machine, remove the key, and wait for all movement to stop before you leave the operator's position. Allow the machine to cool before adjusting, servicing, cleaning, or storing it.

Improperly using or maintaining this machine can result in injury. To reduce the potential for injury, comply with these safety instructions and always pay attention to the safety-alert symbol ⚠, which means Caution, Warning, or Danger—personal safety instruction. Failure to comply with these instructions may result in personal injury or death.

Safety and Instructional Decals

Safety decals and instructions are easily visible to the operator and are located near any area of potential danger. Replace any decal that is damaged or missing.

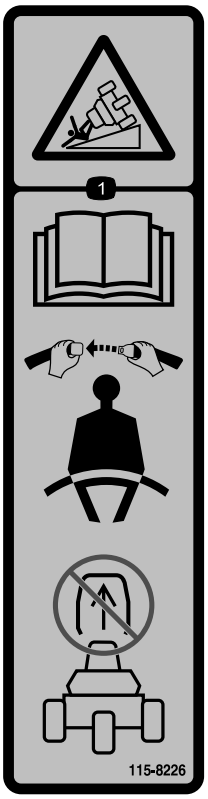

decal115-8226

115-8226

1. Tipping hazard—read the *Operator's Manual*; wear a seatbelt; do not remove the roll bar.

decal133-8062

133-8062

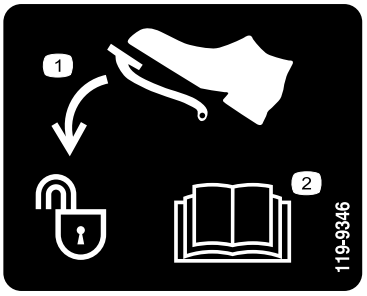

decal119-9346

119-9346

1. Press the pedal to unlock.
2. Read the *Operator's Manual* for more information.

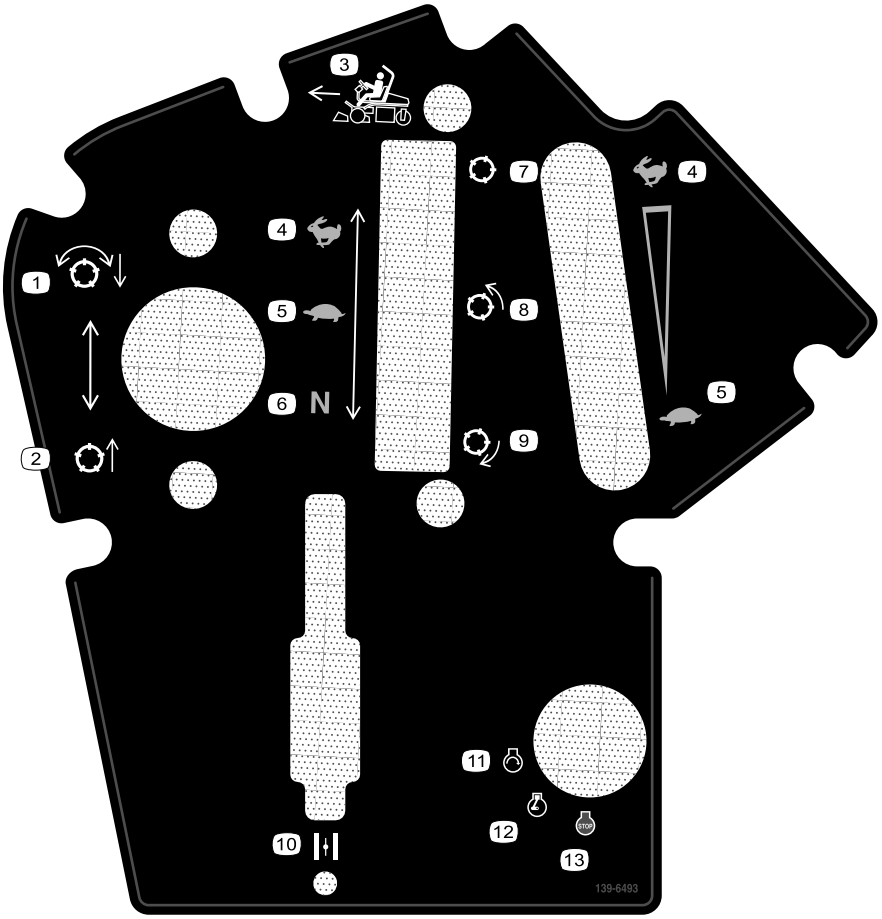

decal139-6493

139-6493

1. Lower and engage the reels.
2. Raise and disengage the reels.
3. Mow direction
4. Fast
5. Slow
6. Neutral
7. Reel—transport
8. Reel—mow
9. Reel—backlap
10. Choke
11. Engine—start
12. Engine—run
13. Engine—stop

Battery Symbols

Some or all of these symbols are on your battery.

1. Explosion hazard
2. No fire, open flame, or smoking
3. Caustic liquid/chemical burn hazard
4. Wear eye protection.
5. Read the *Operator's Manual*.
6. Keep bystanders away from the battery.
7. Wear eye protection; explosive gases can cause blindness and other injuries.
8. Battery acid can cause blindness or severe burns.
9. Flush eyes immediately with water and get medical help fast.
10. Contains lead; do not discard

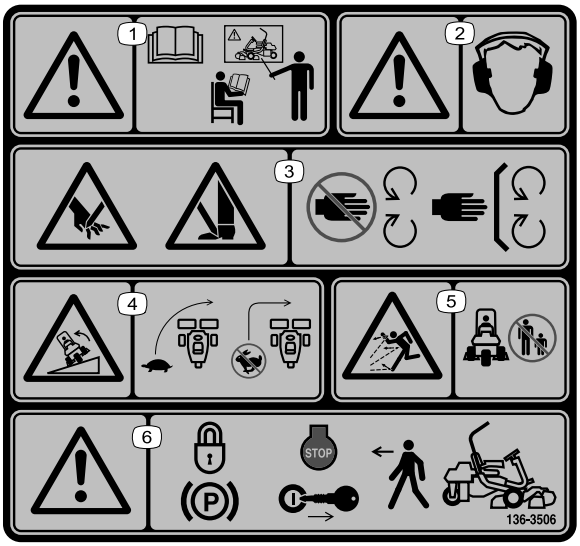

decal136-8506

136-8506

1. Warning—read the *Operator's Manual*; do not operate this machine unless you are trained.
2. Warning—wear hearing protection.
3. Cutting/dismemberment hazard of hand or foot—stay away from moving parts; keep all guards and shields in place.
4. Tipping hazard—slow the machine before turning; do not turn at high speeds.
5. Thrown object hazard—keep bystanders away.
6. Warning—engage the parking brake, shut off the engine, and remove the key before leaving the machine.

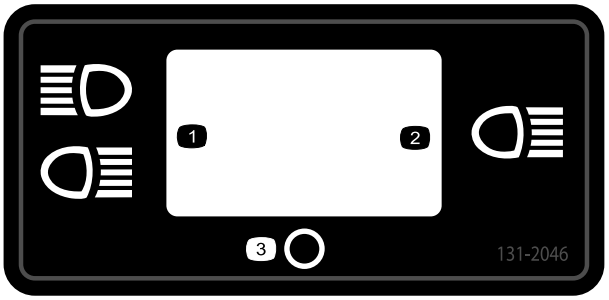

decal131-2046

131-2046

1. Double lights
2. Single light
3. Off

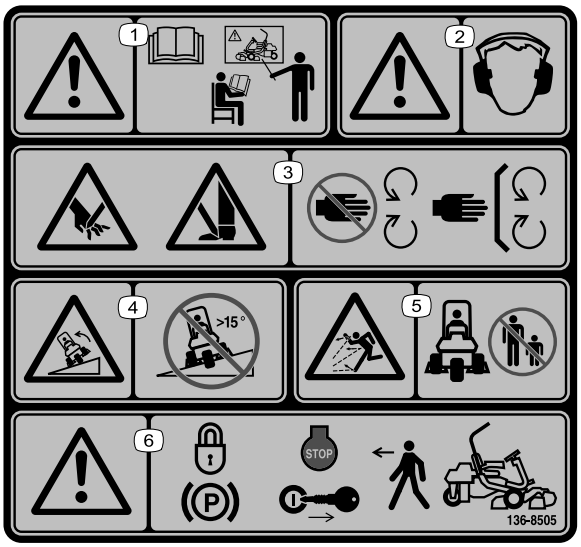

decal136-8505

136-8505

Note: This machine complies with the industry standard stability test in the static lateral and longitudinal tests with the maximum recommended slope indicated on the decal. Review the instructions for operating the machine on slopes in the *Operator's Manual* as well as the conditions in which you would operate the machine to determine whether you can operate the machine in the conditions on that day and at that site. Changes in the terrain can result in a change in slope operation for the machine.

1. Warning—read the *Operator's Manual*; do not operate this machine unless you are trained.
2. Warning—wear hearing protection.
3. Cutting/dismemberment hazard of hand or foot—stay away from moving parts; keep all guards and shields in place.
4. Tipping hazard—do not use on slopes greater than 15°.
5. Thrown object hazard—keep bystanders away.
6. Warning—engage the parking brake, shut off the engine, and remove the key before leaving the machine.

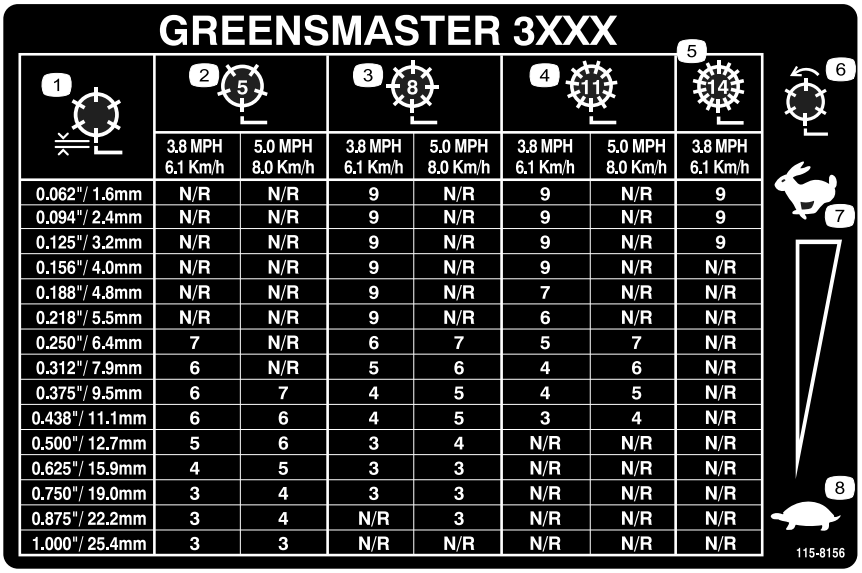

GREENSMASTER 3XXX

1	2 (5)		3 (8)		4 (11)		5 (14)
	3.8 MPH 6.1 Km/h	5.0 MPH 8.0 Km/h	3.8 MPH 6.1 Km/h	5.0 MPH 8.0 Km/h	3.8 MPH 6.1 Km/h	5.0 MPH 8.0 Km/h	3.8 MPH 6.1 Km/h
0.062"/ 1.6mm	N/R	N/R	9	N/R	9	N/R	9
0.094"/ 2.4mm	N/R	N/R	9	N/R	9	N/R	9
0.125"/ 3.2mm	N/R	N/R	9	N/R	9	N/R	9
0.156"/ 4.0mm	N/R	N/R	9	N/R	9	N/R	N/R
0.188"/ 4.8mm	N/R	N/R	9	N/R	7	N/R	N/R
0.218"/ 5.5mm	N/R	N/R	9	N/R	6	N/R	N/R
0.250"/ 6.4mm	7	N/R	6	7	5	7	N/R
0.312"/ 7.9mm	6	N/R	5	6	4	6	N/R
0.375"/ 9.5mm	6	7	4	5	4	5	N/R
0.438"/ 11.1mm	6	6	4	5	3	4	N/R
0.500"/ 12.7mm	5	6	3	4	N/R	N/R	N/R
0.625"/ 15.9mm	4	5	3	3	N/R	N/R	N/R
0.750"/ 19.0mm	3	4	3	3	N/R	N/R	N/R
0.875"/ 22.2mm	3	4	N/R	3	N/R	N/R	N/R
1.000"/ 25.4mm	3	3	N/R	N/R	N/R	N/R	N/R

decal115-8156

115-8156

1. Reel height
2. 5–blade cutting unit
3. 8–blade cutting unit
4. 11–blade cutting unit
5. 14–blade cutting unit
6. Reel speed
7. Fast
8. Slow

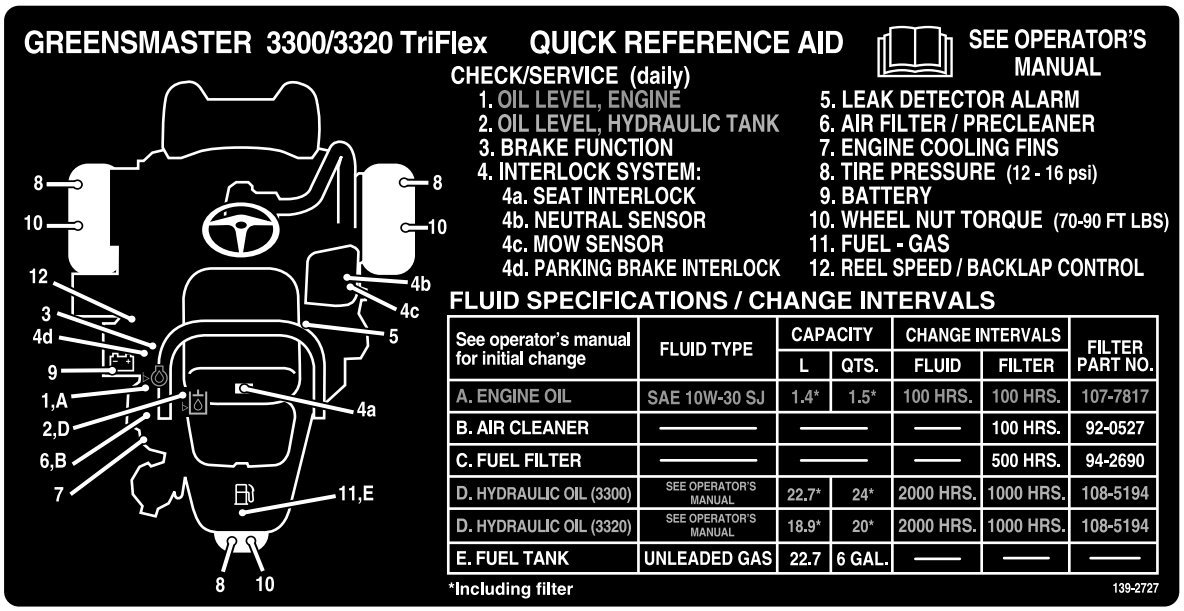

GREENSMASTER 3300/3320 TriFlex QUICK REFERENCE AID

SEE OPERATOR'S MANUAL

CHECK/SERVICE (daily)

1. OIL LEVEL, ENGINE
2. OIL LEVEL, HYDRAULIC TANK
3. BRAKE FUNCTION
4. INTERLOCK SYSTEM:
   - 4a. SEAT INTERLOCK
   - 4b. NEUTRAL SENSOR
   - 4c. MOW SENSOR
   - 4d. PARKING BRAKE INTERLOCK
5. LEAK DETECTOR ALARM
6. AIR FILTER / PRECLEANER
7. ENGINE COOLING FINS
8. TIRE PRESSURE (12 - 16 psi)
9. BATTERY
10. WHEEL NUT TORQUE (70-90 FT LBS)
11. FUEL - GAS
12. REEL SPEED / BACKLAP CONTROL

FLUID SPECIFICATIONS / CHANGE INTERVALS

See operator's manual for initial change	FLUID TYPE	CAPACITY		CHANGE INTERVALS		FILTER PART NO.
		L	QTS.	FLUID	FILTER	
A. ENGINE OIL	SAE 10W-30 SJ	1.4*	1.5*	100 HRS.	100 HRS.	107-7817
B. AIR CLEANER	——	——		——	100 HRS.	92-0527
C. FUEL FILTER	——	——		——	500 HRS.	94-2690
D. HYDRAULIC OIL (3300)	SEE OPERATOR'S MANUAL	22.7*	24*	2000 HRS.	1000 HRS.	108-5194
D. HYDRAULIC OIL (3320)	SEE OPERATOR'S MANUAL	18.9*	20*	2000 HRS.	1000 HRS.	108-5194
E. FUEL TANK	UNLEADED GAS	22.7	6 GAL.	——	——	——

*Including filter

139-2727

decal139-2727

139-2727

Setup

Loose Parts

Use the chart below to verify that all parts have been shipped.

Procedure	Description	Qty.	Use
1	Roll bar Bolt (1/2 x 3-3/4 inches) Flange nut (1/2 inch)	1 4 4	Install the roll bar.
2	Seat Seat wire harness	1 1	Install the seat to the base.
3	Steering wheel Locknut (1-1/2 inches) Washer Steering-wheel cap	1 1 1 1	Install the steering wheel.
4	No parts required	–	Charge the battery.
5	Oil Cooler Kit—Greensmaster 3300 Series Traction Unit (Part No. 119-1691 [purchased separately])	–	Install the optional oil cooler.
6	Grass-basket hook Flange bolts	6 12	Install the grass-basket hooks.
7	Gauge bar Cutting unit (obtain from your authorized Toro distributor) Grass basket Electric-reel-motor counterweight Capscrew O-ring	1 3 3 3 6 3	Install the cutting units and counter weights.
8	No parts required	–	Set the clip-control feature.
9	Weight Kit (Part No. 119-7129)—sold separately Three-Wheel-Drive Weight Kit (Part No. 120-5750—sold separately)	1 1	Add rear weight.
10	Warning decal (Part No. 136-8505) CE mark decal Production year decal	1 1 1	Install the CE decals (if required).
11	No parts required	–	Reduce the tire pressure.
12	No parts required	–	Burnish the brakes.

Media and Additional Parts

Description	Qty.	Use
Operator's Manual	1	Review the manual before operating the machine.
Engine owner’s manual	1	Use the manual to reference engine information.

Description	Qty.	Use
Declaration of Conformity Noise rating certificate	1 1	For CE compliance
Ignition keys	2	Use a key to start the engine.

1

Installing the Roll Bar

Parts needed for this procedure:

1	Roll bar
4	Bolt (1/2 x 3-3/4 inches)
4	Flange nut (1/2 inch)

Procedure

1. Remove the top crate support from the crate.
2. Remove the roll bar from the crate.
3. Remove the 3 bolts that secure the right side cover to the machine and remove the side cover.
4. Remove the 2 bolts that secure the fuse-block bracket to the ROPS bracket as shown in Figure 3.

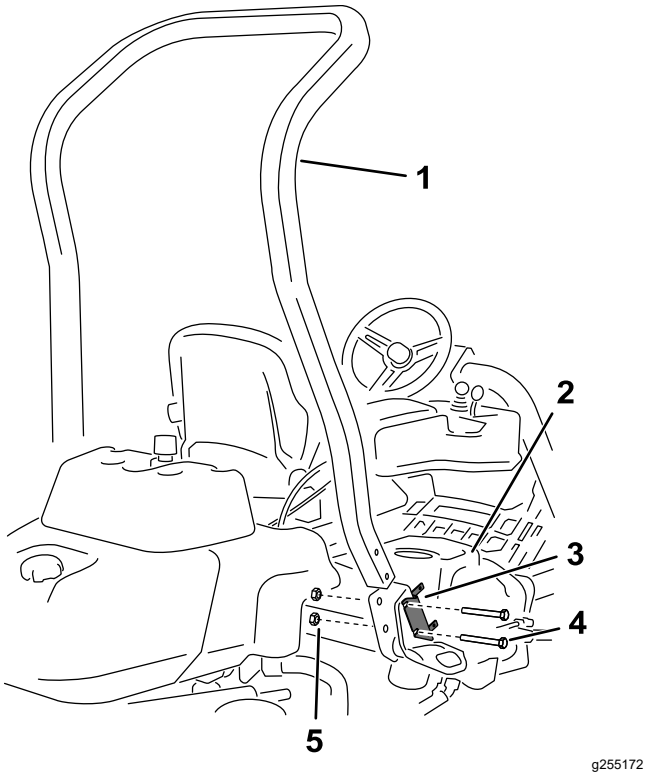

Figure 3

1. Roll bar
2. Right side cover
3. Fuse block bracket
4. Bolt (1/2 x 3-3/4 inches)
5. Flange nut (1/2 inch)

5. Align the fuse-block bracket on the right ROPS bracket and use 4 bolts (1/2 x 3-3/4 inches) and 4 flange nuts (1/2 inch) to install the roll bar into the ROPS brackets on each side of the machine.
6. Torque the fasteners to 136 to 149 N·m (100 to 110 ft-lb).
7. Use the 3 bolts that you previously removed to secure the right side cover to the machine.

2

Installing the Seat

Parts needed for this procedure:

1	Seat
1	Seat wire harness

Procedure

Note: Mount the seat in the front set of mounting holes to gain an additional 7.6 cm (3 inches) in the forward adjustment, or in the rear mounting holes for an additional 7.6 cm (3 inches) in the rearward adjustment.

1. Remove and discard the lag bolts securing the seat slides and cut the shipping straps.
2. Remove the 4 bolts (5/16 x 3/4 inch) and washers from the shipping bracket and discard the bracket.
3. Secure the seat to the seat base with 4 bolts and washers removed previously (Figure 4).

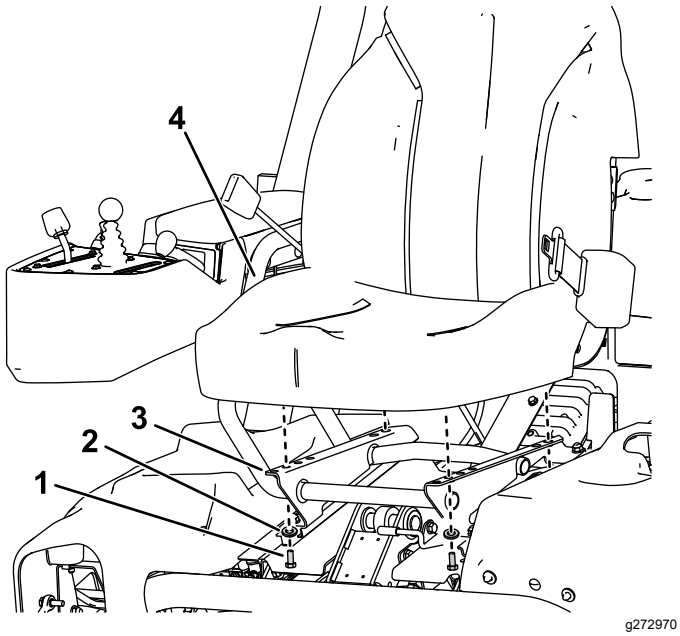

Figure 4

1. Bolt (5/16 x 3/4 inch)
2. Washer
3. Seat base
4. Seat

4. Locate the open connector on the main wire harness to the right of the seat and connect it to the wire harness that came with the seat.
5. Route the seat wire harness around the seat slides, ensuring that it is not pinched when you move the seat, and connect it to the port on the bottom of the seat.

3

Installing the Steering Wheel

Parts needed for this procedure:

1	Steering wheel
1	Locknut (1-1/2 inches)
1	Washer
1	Steering-wheel cap

Procedure

1. Slide the steering wheel onto the steering shaft (Figure 5).

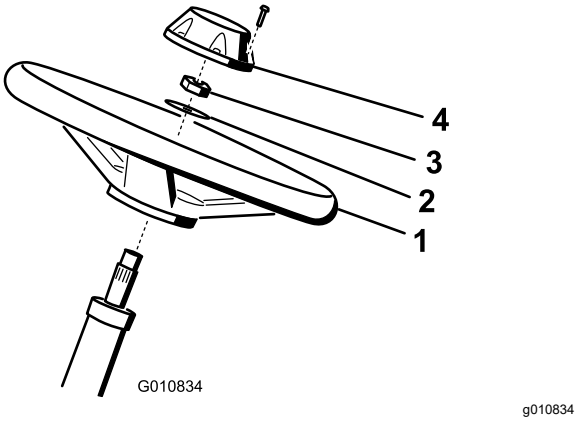

Figure 5

1. Steering wheel
2. Washer
3. Locknut
4. Cap

2. Slide the washer onto the steering shaft (Figure 5).
3. Secure the steering wheel to the shaft with a locknut and tighten it to 27 to 35 N·m (20 to 26 ft-lb) (Figure 5).
4. Install the cap to the steering wheel and secure it with 6 bolts (Figure 5).

4

Charging the Battery

No Parts Required

Procedure

Charge the battery; refer to Charging the Battery (page 39).

5

Installing the Oil Cooler

Optional

Parts needed for this procedure:

–	Oil Cooler Kit—Greensmaster 3300 Series Traction Unit (Part No. 119-1691 [purchased separately])

Procedure

If you are operating the machine in hot climates, where the ambient temperature is above 29°C (85°F), or using it for heavy-duty use (mowing other than greens, such as fairways or verticutting), install the optional hydraulic oil cooler kit (Part No. 119-1691).

6

Installing the Grass-Basket Hooks

Parts needed for this procedure:

6	Grass-basket hook
12	Flange bolts

Procedure

Install the 6 grass-basket hooks onto the ends of the suspension-arm bars using the 12 flange bolts (Figure 6).

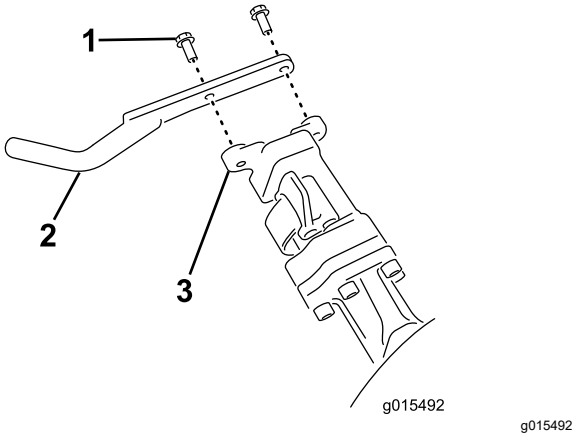

Figure 6

1. Flange bolt
2. Grass-basket hook
3. Suspension-arm bar

7

Installing the Cutting Units

Parts needed for this procedure:

1	Gauge bar
3	Cutting unit (obtain from your authorized Toro distributor)
3	Grass basket
3	Electric-reel-motor counterweight
6	Capscrew
3	O-ring

Procedure

1. Prepare the cutting units for installation; refer to your cutting unit *Operator's Manual*.
2. Apply grease to the inside diameter of the drive coupler.
3. Install an O-ring to each reel motor as shown in Figure 7.

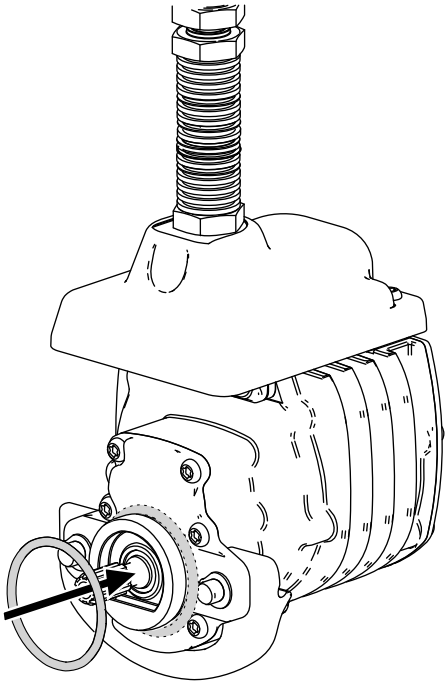

g256064

Figure 7

4. Install the electric-reel-motor counterweight; refer to Installing the Electrical Counterweights (page 48).
5. Install the cutting units; refer to Installing the Cutting Units (page 48).

8

Setting the Clip-Control Feature

No Parts Required

Procedure

The machine has a clip-control feature that varies the speed of the reels with the speed of the machine to maintain a constant clip. This achieves a consistent, high quality-of-cut and a uniform after-cut appearance. The clip-control feature is off by default; to configure it and turn it on, refer to Setting the Clip-Control Feature (page 21)

9

Adding Rear Weight

Parts needed for this procedure:

1	Weight Kit (Part No. 119-7129)—sold separately
1	Three-Wheel-Drive Weight Kit (Part No. 120-5750—sold separately)

Procedure

- This machine complies with ANSI B71.4-2017 and EN ISO 5395 when equipped with the Weight Kit (Part No. 119-7129).
- If your machine is equipped with the Three-Wheel-Drive Kit, the machine complies with ANSI B71.4-2017 and EN ISO 5395 when the Three-Wheel-Drive Weight Kit (Part No. 120-5750) is installed.

10

Installing the CE Decals

Parts needed for this procedure:

1	Warning decal (Part No. 136-8505)
1	CE mark decal
1	Production year decal

Procedure

If you use this machine in a country that complies to CE standards, perform the following steps after you install the guard kit to the machine:

- Apply the CE warning decal (Part No. 136-8505) over the existing warning decal (Part No. 136-8506).
- Apply the CE mark decal to the frame under the front of the seat (Figure 8).

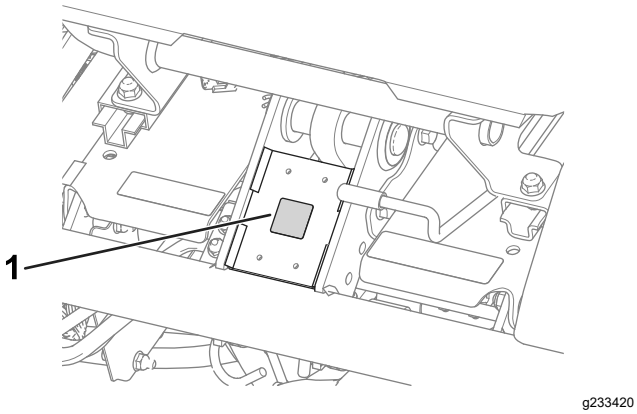

Figure 8

1. CE mark decal

- Install the production year decal near the serial plate (Figure 9).

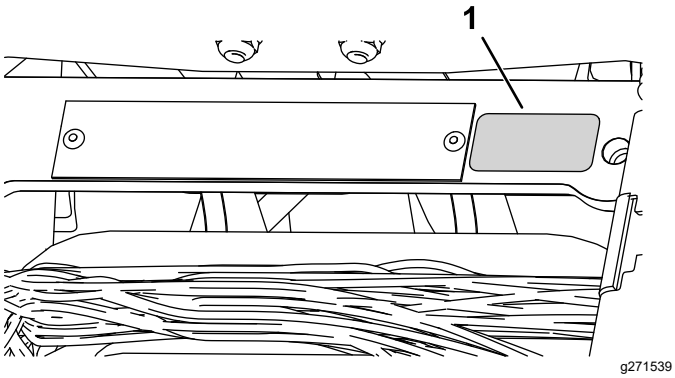

Figure 9

1. Production year decal

11

Reducing the Tire Pressure

No Parts Required

Procedure

The tires are overinflated at the factory for shipping purposes. Reduce the pressure to the proper levels before starting the machine; refer to Checking the Tire Pressure (page 41).

12

Burnishing the Brakes

No Parts Required

Procedure

Burnish the brakes; refer to Burnishing the Brakes (page 43).

Product Overview

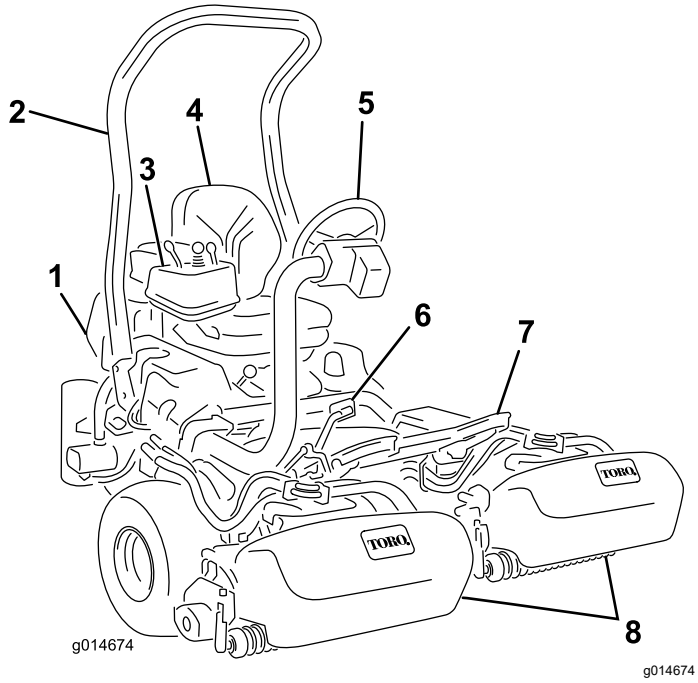

Figure 10

1. Engine
2. Roll bar
3. Control panel
4. Seat
5. Steering wheel
6. Traction pedal
7. Footrest
8. Cutting units

Controls

Traction Pedal

The traction pedal (Figure 11) has 3 functions: to make the machine move forward, to move it backward, and to stop the machine. Press the top of the pedal to move forward and the bottom of the pedal to move backward or to assist in stopping when moving forward. Also, allow the pedal to move to the neutral position to stop the machine. For your comfort, do not rest the heal of your foot on the reverse pad of the traction pedal when you are driving the machine forward. (Figure 12).

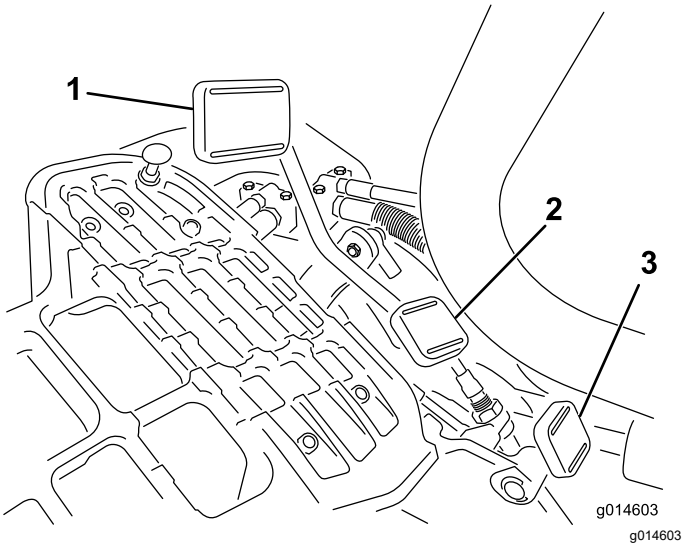

Figure 11

1. Traction pedal—forward
2. Taction pedal—reverse
3. Steering-arm-locking pedal

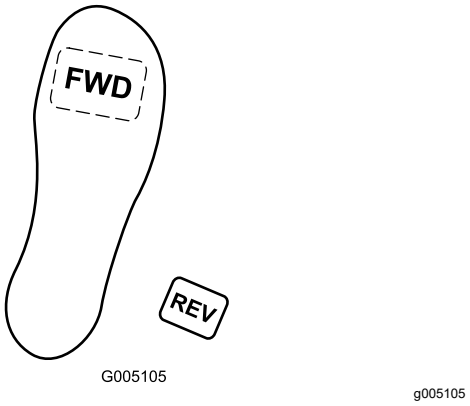

Figure 12

Ground speeds are as follows:

- 3.2 to 8 km/h (2 to 5 mph) forward mowing speed
- 16 km/h (10 mph) maximum transport speed
- 4.0 km/h (2.5 mph) reverse speed

Steering-Arm-Locking Pedal

Press the pedal (Figure 11) and raise or lower the steering arm for operator comfort, then, release the pedal to lock the arm in place.

Throttle Lever

The throttle lever (Figure 13) allows you to control the speed of the engine. Move the throttle lever toward the FAST position to increases the engine speed; move it toward the SLOW position to decrease the engine speed.

Note: You cannot shut off the engine using the throttle lever.

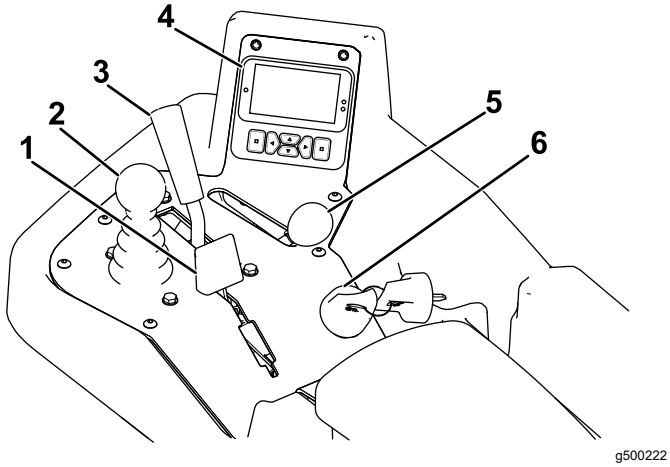

Figure 13

1. Choke lever
2. Raise/lower mow control
3. Functional-control lever
4. InfoCenter control
5. Throttle lever
6. Ignition switch

Choke Lever

To start a cold engine, close the carburetor choke by pushing the choke lever forward (Figure 13) to the CLOSED position. After the engine starts, regulate the choke lever to keep the engine running smoothly. As soon as possible, open the choke by pulling the lever rearward to the OPEN position. A warm engine requires little or no choking.

Raise/Lower Mow Control

Moving the control (Figure 13) forward during cutting operation lowers the cutting units and starts the reels. Pull back on the control to stop the reels and raise the cutting units. To stop the reels without raising the cutting units, pull back on the control momentarily and releasing it. Start the reels by moving the control forward.

Functional Control Lever

The functional control lever (Figure 13) provides 2 traction selections plus a NEUTRAL position. You can shift from mow to transport or transport to mow (not to neutral) while the machine is in motion; no damage will result.

- REAR position—neutral position; use when backlapping the reels
- MIDDLE position—use when cutting grass
- FRONT position—use when driving the machine between job sites

Ignition Switch

Insert the key into the switch (Figure 13) and turn it clockwise to the START position to start the engine. Release the key as soon as the engine starts; the key moves to the ON position. Turn the key counterclockwise to the STOP position to shut off the engine.

Parking Brake Lever

Pull the brake lever (Figure 14) to engage the parking brake. Disengage it by squeezing the release lever on the underside of the brake lever and lowering it to the released position. Engage the parking brake whenever you leave the machine.

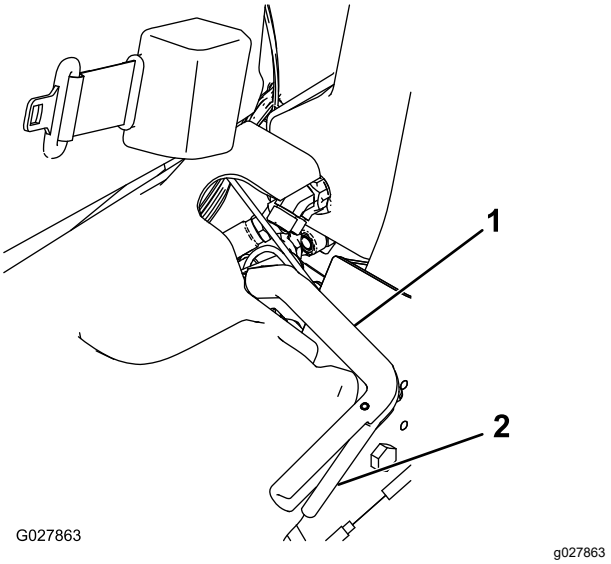

Figure 14

1. Parking-brake lever
2. Release lever

InfoCenter Control

Using the InfoCenter LCD Display

The InfoCenter display shows information about your machine, such as the operating status, various diagnostics, and other information about the machine.

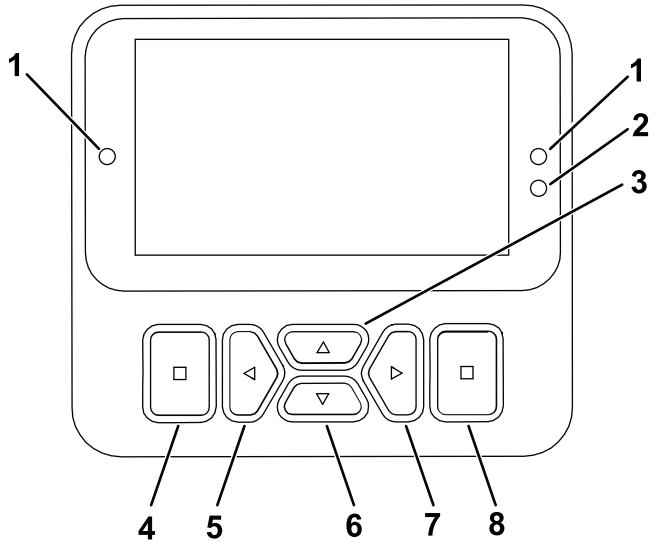

g471371

Figure 15

1. Indicator light
2. Display brightness sensor
3. Navigational button—up
4. Back/exit button
5. Navigational button—decrease/ left
6. Navigational button—down
7. Navigational button—increase/ right
8. Enter/select button

Note: The purpose of each button may change depending on what is required at the time. Each button is labeled with an icon displaying its current function.

Use the navigational buttons to navigate between the main information screen, the eReel motor screen, and menu items:

- **Main information screen** (Figure 16): shows current machine information while the key is in the ON position.

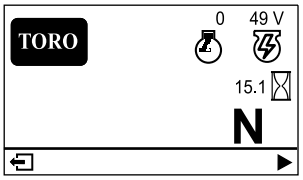

g499522

Figure 16

- **eReel motor screen** (Figure 17): shows the speed and current of each cutting-unit motor.

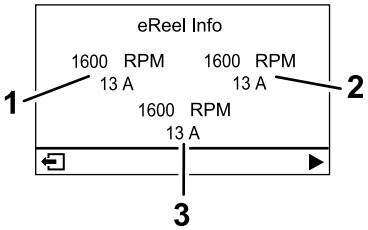

g485252

Figure 17

1. Front left cutting-unit motor
2. Front right cutting-unit motor
3. Center cutting-unit motor

- **Main menu**: refer to Using the Menus (page 18).

InfoCenter Icon Description

	Hour meter
	Function-control switch is in the NEUTRAL position.
	Function-control switch is in the TRANSPORT position.
	Function-control switch is in the MOW position.
	The operator must sit in the seat.
	The parking brake is engaged.
	Start the engine.
	Engine
	The PTO is on.
	The PTO is disengaged.
	Battery
	Indicates when the cutting units are being raised.

InfoCenter Icon Description (cont'd.)

	Indicates when the cutting units are being lowered.
	Active
	Inactive
	Previous
	Next
	Increase
	Decrease
	Previous screen
	Next screen
	Increase value
	Decrease value
	Menu
	Scroll up/down
	Scroll left/right

Using the Menus

To access the InfoCenter-menu system, press the MENU ACCESS button while at the main screen. This brings you to the MAIN MENU. Refer to the following tables for a synopsis of the options available from the menus:

Main Menu

Menu Item	Description
FAULT	The FAULTS menu contains a list of the recent machine faults. Refer to the Service Manual or your authorized Toro distributor for more information on the FAULTS menu and the information contained there.
SERVICE	The SERVICE menu contains information on the machine such as hours of use and other similar numbers. Refer to the Service (page 19) table.
DIAGNOSTICS	The DIAGNOSTICS menu lists various states that the machine currently has. You can use this to troubleshoot certain issues as it will quickly tell you which machine controls are on and which are off.
SETTINGS	The SETTINGS menu allows you to modify settings for the InfoCenter display. Refer to the Settings (page 19) table.
MACHINE SETTINGS 🔒	The MACHINE SETTINGS menu allows you to adjust machine settings, such as reel speed, maximum mowing speed, and maximum transport speed. Refer to the Machine Settings (page 19) table.
ABOUT	The ABOUT menu lists the model number, serial number, and software version of your machine. Refer to the About (page 19) table.

Service

Menu Item	Description
HOURS	Lists the total number of hours that the machine, engine, reels, backlap, and fan have been on, as well as the number of hours the machine has been transported and overheated.
COUNTS	Lists the number of preheats and starts the machine has experienced.
BACKLAP	Turns backlapping ON/OFF (once ON you can turn backlapping Off with this setting or by turning off the ignition key).

Settings

Menu Item	Description
ENTER PIN	Allows a person (superintendent/mechanic) authorized by your company with the PIN code to access protected menus.
BACKLIGHT	Controls the brightness of the LCD display.
LANGUAGE	Controls the language used on the InfoCenter.
FONT SIZE	Controls the size of the font on the InfoCenter.
UNITS	Controls the units used on the InfoCenter. The menu choices are English or metric.
PROTECT SETTINGS 🔒	Controls the protected menus.
RESET DEFAULTS 🔒	Resets the InfoCenter to default settings.

Machine Settings

Menu Item	Description
RESET DEFAULTS 🔒	Resets the InfoCenter to default settings.
RAISE DELAY 🔒	Controls the raise delay time for the center cutting unit.
LOWER DELAY 🔒	Controls the lower delay time for the center cutting unit.
TAPOFF TIME 🔒	Controls the tap-off delay.
REEL SPEED 🔒	Controls the blade speed on the cutting units.
BACKLAP SPEED 🔒	Controls the backlap speed.
CLIP CONTROL 🔒	Turns the automatic clip-control feature on or off.

Machine Settings (cont'd.)

BLADE COUNT 🔒	Sets the number of blades in each reel. This setting is only necessary if CLIP CONTROL is set to ON.
HEIGHT OF CUT 🔒	Sets the desired height of cut. This setting is only necessary if CLIP CONTROL is set to ON.

About

Menu Item	Description
MODEL	Lists the model number of the machine.
SN	Lists the serial number of the machine.
S/W REV	Lists the software revision of the master controller.
XDM-2700 🔒	Lists the software revision of the InfoCenter.
CUTTING UNIT 1 🔒	Lists the software revision of the center cutting unit motor.
CUTTING UNIT 2 🔒	Lists the software revision of the front, left cutting unit motor.
CUTTING UNIT 3 🔒	List the software revision of the front, right cutting unit motor.
GENERATOR 🔒	Lists the serial number of the generator.

Note: 🔒 Protected under Protected Menus—accessible only by entering PIN; refer to Accessing Protected Menus (page 19).

Accessing Protected Menus

Note: The factory default PIN code for you machine is either 0000 or 1234.

If you changed the PIN code and forgot the code, contact your authorized Toro distributor for assistance.

1. From the MAIN MENU, scroll down to the SETTINGS menu and press the select button (Figure 18).

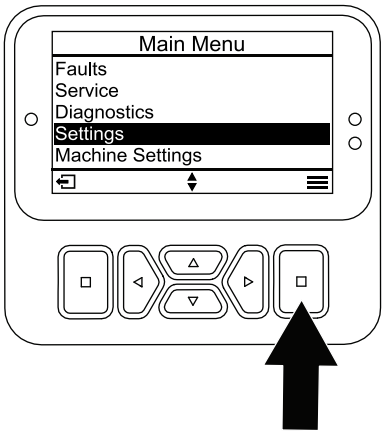

g471349

Figure 18

2. In the SETTINGS menu, scroll to ENTER PIN and press the select button (Figure 19A).

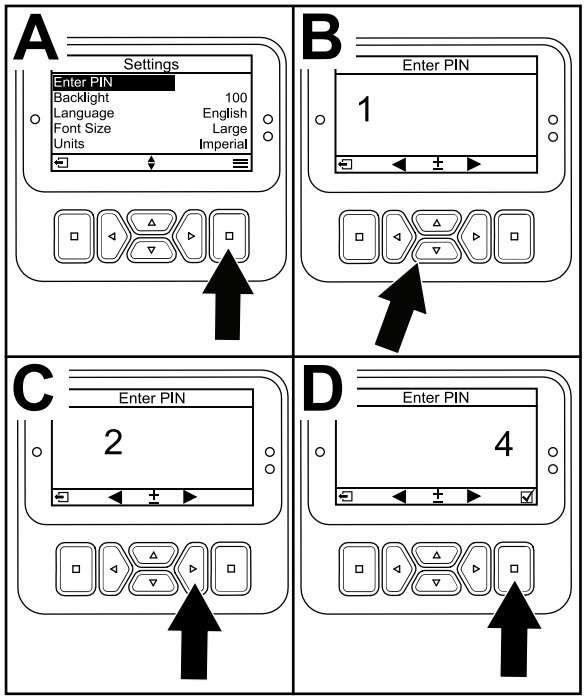

g471350

Figure 19

3. To enter the PIN code, press the up/down navigation buttons until the correct first digit appears, then press the right navigation button to move on to the next digit (Figure 19B and Figure 19C). Repeat this step until the last digit is entered.
4. Press the select button (Figure 19D).

   Note: If the display accepts the PIN code and the protected menu is unlocked, **PIN** displays in the upper right corner of the screen.
5. To lock the protected menu, rotate the key switch to the OFF position and then to the ON position.

Viewing and Changing the Protected Menu Settings

1. In SETTINGS, scroll down to PROTECT SETTINGS.
2. To view and change the settings without entering a PIN code, use the select button to change the PROTECT SETTINGS to ☐ (Off).
3. To view and change the settings with a PIN code, use the select button to change the PROTECT SETTINGS to ☑ (On), set the PIN code, and turn the key in the ignition switch to the OFF position and then to the ON position.

Understanding the Diagnostic Light

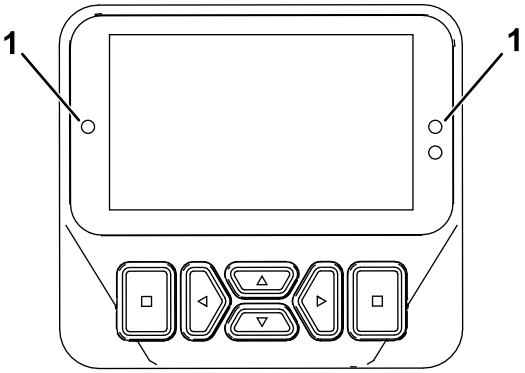

g462666

Figure 20

1. Diagnostic light

- Flashing red—active fault
- Solid red—active advisory
- Solid blue—calibration/dialog messages
- Solid green—normal operation

Adjusting the Center Cutting Unit Raise/Lower Delay

Adjust the raise and lower delay time for the center cutting with the InfoCenter, as desired from 1 to 10 according to the table below. The factory default setting is 6 (375 ms) and is optimized for a 3.8 mph mow speed.

Increment Number	Delay Time (Seconds)
1	0.100
2	0.150
3	0.200
4	0.250
5	0.300
6	0.375
7	0.475
8	0.600
9	0.750
10	0.925

Adjusting the Tap-off Delay

The tap-off delay feature allows the cutting units to turn off without raising, and you may adjust it with the InfoCenter. The delay setting represents the maximum time for the raise/lower joystick to remain in the raise position to activate this feature. The factory default setting is 1 which disables this feature.

Increment Number	Delay Time (Seconds)
1	Off
2	0.050
3	0.100
4	0.150
5	0.200
6	0.250
7	0.300
8	0.350
9	0.400
10	0.450

Setting the Clip-Control Feature

To achieve a consistent, high quality of cut and a uniform after-cut appearance, the machine has a clip-control feature that varies the speed of the reels with the speed of the machine to maintain a constant clip. This feature is OFF by default. If you turn on this feature, ensure that the blade count and height of cut are configured to their appropriate values in the SETTINGS menu.

Setting the Reel Speed

The clip-control feature automatically sets the reel speed to match the machine speed. If you choose not to use the clip-control feature, set the reel speed manually as follows:

1. Select the height-of-cut at which the cutting units are set.
2. Choose the desired ground speed best suited for conditions.
3. Using the appropriate graph (Figure 21) for 5-, 8-, 11-, or 14-blade cutting units, determine the proper reel speed setting.

	5		8		11		14
	3.8 MPH 6.1 Km/h	5.0 MPH 8.0 Km/h	3.8 MPH 6.1 Km/h	5.0 MPH 8.0 Km/h	3.8 MPH 6.1 Km/h	5.0 MPH 8.0 Km/h	3.8 MPH 6.1 Km/h
0.062"/ 1.6mm	N/R	N/R	9	N/R	9	N/R	9
0.094"/ 2.4mm	N/R	N/R	9	N/R	9	N/R	9
0.125"/ 3.2mm	N/R	N/R	9	N/R	9	N/R	9
0.156"/ 4.0mm	N/R	N/R	9	N/R	9	N/R	N/R
0.188"/ 4.8mm	N/R	N/R	9	N/R	7	N/R	N/R
0.218"/ 5.5mm	N/R	N/R	9	N/R	6	N/R	N/R
0.250"/ 6.4mm	7	N/R	6	7	5	7	N/R
0.312"/ 7.9mm	6	N/R	5	6	4	6	N/R
0.375"/ 9.5mm	6	7	4	5	4	5	N/R
0.438"/ 11.1mm	6	6	4	5	3	4	N/R
0.500"/ 12.7mm	5	6	3	4	N/R	N/R	N/R
0.625"/ 15.9mm	4	5	3	3	N/R	N/R	N/R
0.750"/ 19.0mm	3	4	3	3	N/R	N/R	N/R
0.875"/ 22.2mm	3	4	N/R	3	N/R	N/R	N/R
1.000"/ 25.4mm	3	3	N/R	N/R	N/R	N/R	N/R

g014736

g014736

Figure 21

4. To set the reel speed on the InfoCenter, open the Main Menu and scroll down to SETTINGS.
5. In the SETTINGS menu, scroll down to REEL SPEED and use the appropriate button to set the reel speed to the desired number.

Diagnosing the Fault-Log Indicator

The fault-log indicator icon appears on the main screen in the event of a fault in the machine. When this icon is present there is a new log entry in the Faults menu that you or your distributor can use to identify the problem.

For a list of faults, refer to your authorized Toro distributor or the *Service Manual*.

Seat-Adjusting Lever

The seat-adjusting lever is located on the front, left corner of the seat (Figure 22), allowing you to adjust the seat forward and rearward.

Note: If you need to adjust the seat more, you can remove the 4 nuts that secure the seat slide rails to the base and move the seat slide rails to the second set of mounting holes provided.

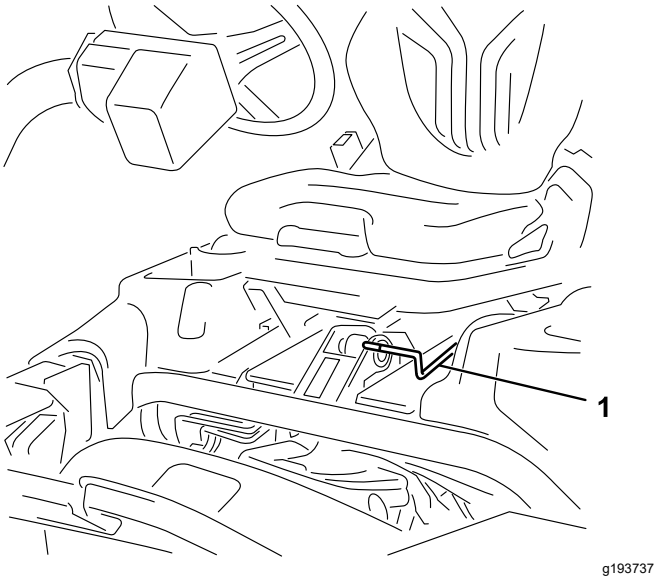

Figure 22

1. Seat-adjusting handle

Fuel-Shutoff Valve

Close the fuel-shutoff valve (Figure 23), behind the seat and under the fuel tank, when storing or transporting the machine on a truck or trailer.

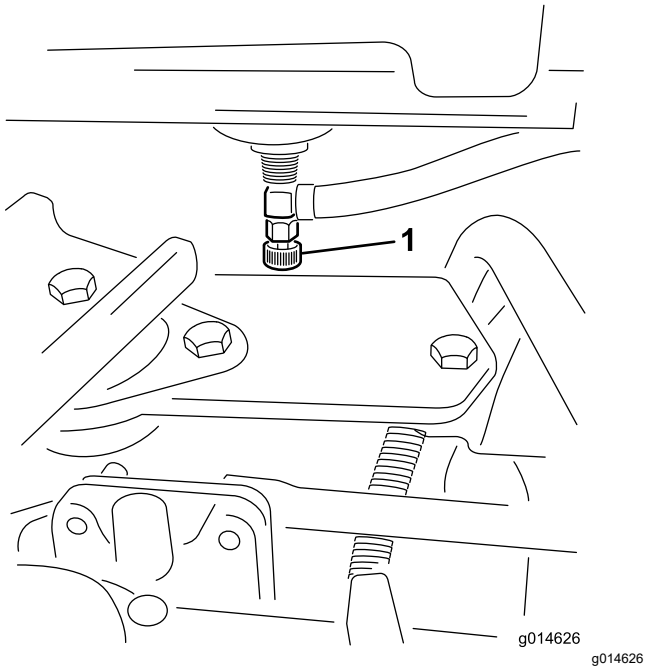

Figure 23

1. Fuel shutoff (under the fuel tank)

Cutting Unit Power Disconnect Connectors

Before installing, removing, or working on the cutting units, disconnect the cutting units from the power supply by separating the cutting unit power disconnect connectors (Figure 24), located at the base of the rollover bar on the left side of the traction unit. Plug the connectors together before operating the machine.

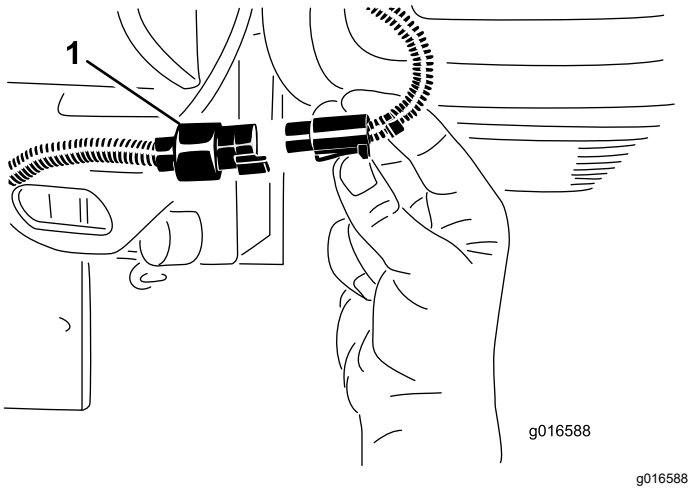

Figure 24

1. Cutting unit power disconnect connector

⚠ CAUTION

If you do not disconnect the power to the cutting units, someone could accidentally start the cutting unit, causing serious injury to hands and feet.

Always separate the cutting unit power disconnect connectors before working on the cutting units.

Specifications

Note: Specifications and design are subject to change without notice.

Note: The weight listed is the weight of the machine in the most common configuration.

The total weight includes the traction unit with three 11-blade cutting units.

Width of cut	151 cm (59.5 inches)
Wheel tread	128 cm (50.5 inches)
Wheel base	119 cm (46.9 inches)
Overall length (w/baskets)	249 cm (98.0 inches)
Overall width	179 cm (70.6 inches)
Overall height	205 cm (80.8 inches)
Weight	712 kg (1,569 lb)

Attachments/Accessories

A selection of Toro approved attachments and accessories is available for use with the machine to enhance and expand its capabilities. Contact your Authorized Service Dealer or authorized Toro distributor or go to www.Toro.com for a list of all approved attachments and accessories.

To ensure optimum performance and continued safety certification of the machine, use only genuine Toro replacement parts and accessories. Replacement parts and accessories made by other manufacturers could be dangerous, and such use could void the product warranty.

Operation

Note: Determine the left and right sides of the machine from the normal operating position.

Before Operation

Before Operation Safety

General Safety

- Never allow children or untrained people to operate or service the machine. Local regulations may restrict the age of the operator. The owner is responsible for training all operators and mechanics.
- Become familiar with the safe operation of the equipment, operator controls, and safety signs.
- Engage the parking brake, shut off the machine, remove the key, and wait for all movement to stop before you leave the operator's position. Allow the machine to cool before adjusting, servicing, cleaning, or storing it.
- Know how to stop the machine and shut off the machine quickly.
- Check that operator-presence controls, safety switches, and safety protective devices are attached and functioning properly. Do not operate the machine unless they are functioning properly.
- Before mowing, always inspect the machine to ensure that the cutting units are in good working condition.
- Inspect the area where you will use the machine and remove all objects that the machine could throw.

Fuel Safety

- Use extreme care in handling fuel. It is flammable and its vapors are explosive.
- Extinguish all cigarettes, cigars, pipes, and other sources of ignition.
- Use only an approved fuel container.
- Do not remove the fuel cap or fill the fuel tank while the engine is running or hot.
- Do not add or drain fuel in an enclosed space.
- Do not store the machine or fuel container where there is an open flame, spark, or pilot light, such as on a water heater or other appliance.
- If you spill fuel, do not attempt to start the engine; avoid creating any source of ignition until the fuel vapors have dissipated.

Fuel Specification

Fuel tank capacity: 26.6 L (7 US gallons)

Recommended Fuel: Unleaded gasoline with an octane rating of 87 or higher ((R+M)/2 rating method)

Ethanol: Gasoline with up to 10% ethanol (gasohol) or 15% MTBE (methyl tertiary butyl ether) by volume is acceptable. Ethanol and MTBE are not the same. Gasoline with 15% ethanol (E15) by volume is not approved for use.

- **Never use gasoline that contains more than 10% ethanol by volume**, such as E15 (contains 15% ethanol), E20 (contains 20% ethanol), or E85 (contains up to 85% ethanol).
- **Do not** use fuel that contains methanol.
- **Do not** store fuel either in the fuel tank or fuel containers over the winter, unless you use a fuel stabilizer.
- **Do not** add oil to gasoline.
- For best results, use only clean, fresh (less than 30 days old) fuel.
- Using unapproved gasoline may cause performance problems and/or engine damage, which may not be covered under the warranty.

Important: **Do not use fuel additives other than a fuel stabilizer/conditioner. Do not use fuel stabilizers with an alcohol base such as ethanol, methanol, or isopropanol.**

Filling the Fuel Tank

1. Clean around the fuel-tank cap and remove it (Figure 25).

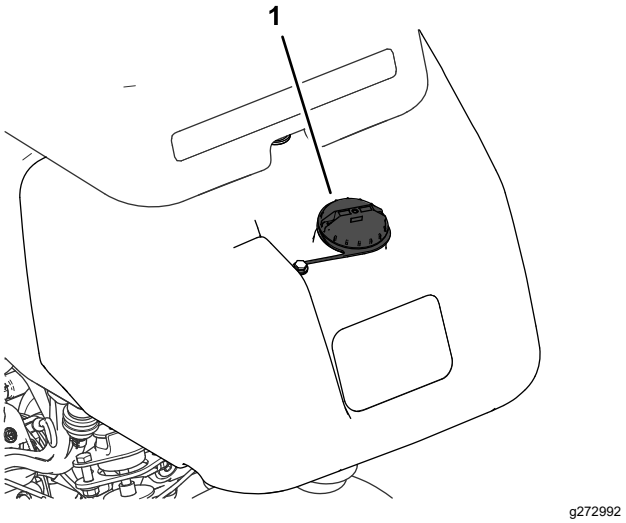

Figure 25

1. Fuel-tank cap

2. Add the specified fuel to the fuel tank until the level is 25 mm (1 inch) below the bottom of the filler neck. This space in the tank allows the fuel to expand.

   Important: **Do not fill the fuel tank completely full.**

3. Install the cap.

   Note: You will hear a click sound when the cap is secure.

4. Wipe up any spilled fuel.

Performing Daily Maintenance

Service Interval: Before each use or daily

Before starting the machine each day, perform the following procedures:

- Check the engine-oil level—refer to Checking the Engine Oil (page 36).
- Check the hydraulic-fluid level—refer to Checking the Hydraulic-Fluid Level (page 44).
- Check the reel-to-bedknife contact—refer to Checking the Reel-to-Bedknife Contact (page 50).
- Check the tire pressure—refer to Checking the Tire Pressure (page 41).

During Operation

During Operation Safety

General Safety

- The owner/operator can prevent and is responsible for accidents that may cause personal injury or property damage.
- Wear appropriate clothing, including eye protection; long pants; substantial, slip-resistant footwear, and hearing protection. Tie back long hair and do not wear loose clothing or loose jewelry.
- Do not operate the machine while ill, tired, or under the influence of alcohol or drugs.
- Use your full attention while operating the machine. Do not engage in any activity that causes distractions; otherwise, injury or property damage may occur.
- Before you start the engine, ensure that all drives are in neutral, the parking brake is engaged, and you are in the operating position.
- Do not carry passengers on the machine.
- Keep bystanders and children out of the operating area. If co-workers must be present, use caution and ensure that the grass baskets are installed on the machine.
- Operate the machine only in good visibility to avoid holes or hidden hazards.
- Avoid mowing on wet grass. Reduced traction could cause the machine to slide.
- Keep your hands and feet away from the cutting units.
- Look behind and down before backing up to be sure of a clear path.
- Use care when approaching blind corners, shrubs, trees, or other objects that may obscure your vision.
- Stop the cutting units whenever you are not mowing.
- Slow down and use caution when making turns and crossing roads and sidewalks with the machine. Always yield the right-of-way.
- Operate the engine only in well-ventilated areas. Exhaust gases contain carbon monoxide, which is lethal if inhaled.
- Do not leave a running machine unattended.
- Before you leave the operating position, do the following:
  - Park the machine on a level surface.
  - Lower the cutting units to the ground and ensure that they are disengaged.

- Engage the parking brake.
- Shut off the engine and remove the key.
- Wait for all movement to stop.

- Operate the machine only in good visibility and appropriate weather conditions. Do not operate the machine when there is the risk of lightning.

Rollover Protection System (ROPS) Safety

- Do not remove any of the ROPS components from the machine.
- Ensure that the seat belt is attached and that you can release it quickly in an emergency.
- Always wear your seat belt.
- Check carefully for overhead obstructions and do not contact them.
- Keep the ROPS in safe operating condition by thoroughly inspecting it periodically for damage and keeping all the mounting fasteners tight.
- Replace all damaged ROPS components. Do not repair or alter them.

Slope Safety

- Slopes are a major factor related to loss of control and rollover accidents, which can result in severe injury or death. You are responsible for safe slope operation. Operating the machine on any slope requires extra caution.
- Evaluate the site conditions to determine if the slope is safe for machine operation, including surveying the site. Always use common sense and good judgment when performing this survey.
- Review the slope instructions, listed below, for operating the machine on slopes. Before you operate the machine, review the site conditions to determine whether you can operate the machine in the conditions on that day and at that site. Changes in the terrain can result in a change in slope operation for the machine.
- Avoid starting, stopping, or turning the machine on slopes. Avoid making sudden changes in speed or direction. Make turns slowly and gradually.
- Do not operate a machine under any conditions where traction, steering, or stability is in question.
- Remove or mark obstructions such as ditches, holes, ruts, bumps, rocks, or other hidden hazards. Tall grass can hide obstructions. Uneven terrain could overturn the machine.
- Be aware that operating the machine on wet grass, across slopes, or downhill may cause the machine to lose traction. Loss of traction to the drive wheels may result in sliding and a loss of braking and steering.
- Use extreme caution when operating the machine near drop-offs, ditches, embankments, water hazards, or other hazards. The machine could suddenly roll over if a wheel goes over the edge or the edge caves in. Establish a safety area between the machine and any hazard.
- Identify hazards at the base of the slope. If there are hazards, mow the slope with a pedestrian-controlled machine.
- If possible, keep the cutting units lowered to the ground while operating on slopes. Raising the cutting units while operating on slopes can cause the machine to become unstable.
- Use extreme caution with grass-collection systems or other attachments. These can change the stability of the machine and cause a loss of control.

Breaking in the Machine

Refer to the engine *Owner's Manual* supplied with the machine for oil change and maintenance procedures recommended during the break-in period.

Only 8 hours of operation is required for the break-in period.

Since the first hours of operation are critical to future dependability of the machine, monitor its functions and performance closely so that minor difficulties, which could lead to major problems, are noted and can be corrected. Inspect the machine frequently during break-in for signs of oil leakage, loose fasteners, or any other malfunction.

Starting the Engine

Note: Inspect the areas beneath the cutting units to ensure that they are clear of debris.

1. Sit on the seat, engage the parking brake, disengage the raise/lower mow control and move the functional-control lever to the NEUTRAL position.
2. Ensure that the traction pedal is in the NEUTRAL position and that you foot is off the pedal.
3. If you are starting a cold engine, move the choke to the ON position.
4. Move the throttle lever to the HALF THROTTLE position.
5. Insert and rotate the ignition key clockwise until the engine starts.
6. After the engine starts, adjust the choke to run the engine smoothly. As soon as possible, open the choke by pulling it rearward to the OFF position. A warm engine requires little or no choking.

Checking the Machine after Starting the Engine

1. Move the throttle lever to the FAST position.
2. Move the raise/lower mow control lever forward momentarily.

   The cutting units should lower and all the reels should rotate.

   Note: The function lever should be in the middle (mow) position for the reels run when lowering the cutting units
3. Move the raise/lower mow control lever rearward.

   The cutting reels should stop rotating and the cutting units should raise to the full transport position.
4. Engage the brake to keep the machine from moving, and operate the traction pedal through the forward and reverse positions.
5. Continue the above procedure for 1 or 2 minutes. Move the functional-control lever to the NEUTRAL position, engage the parking brake, and shut off the engine.
6. Check for fluid leaks and tighten the hydraulic fittings if any leaks are found.

   Note: When the machine is new and the bearings and reels are tight, it is necessary to use the FAST throttle-lever position for this check. A fast throttle setting may not be required after the break-in period.

   Note: If fluid leaks continue to appear, contact your authorized Toro distributor for assistance and, if necessary, replacement parts.

   Important: **A trace of fluid on the motor or wheel seals is normal. Seals require a small amount of lubrication to perform properly.**

Shutting Off the Engine

1. Move the throttle lever to the SLOW position, pull back the raise/lower mow control, and move the functional-control lever to the NEUTRAL position.
2. Rotate the ignition key to the OFF position to shut off the engine. Remove the key from the switch to prevent accidental starting.
3. Close the fuel shut-off valve before storing the machine.

Checking the Safety-Interlock System

Service Interval: Before each use or daily

⚠ CAUTION

If the safety interlock switches are disconnected or damaged the machine could operate unexpectedly, causing personal injury.

- **Do not tamper with the interlock switches.**
- **Check the operation of the interlock switches daily and replace any damaged switches before operating the machine.**

The purpose of the safety-interlock system is to prevent operation of the machine where there is possible injury to you or damage to the machine.

The safety-interlock system prevents the engine from starting unless:

- The traction pedal is in the NEUTRAL position.
- The functional-control lever is in the NEUTRAL position.

The safety-interlock system prevents the machine from moving unless:

- The parking brake is disengaged.
- You are seated in the operator's seat.
- The functional-control lever is in the MOW position or the TRANSPORT position.

The safety-interlock system prevents the reels from operating unless the functional-control lever is in the MOW position.

Checking the Traction Pedal

Perform the following system checks daily to ensure that the interlock system is operating correctly:

1. Sit on the seat, move the traction pedal to the NEUTRAL position, move the functional-control lever to the NEUTRAL position, and engage the parking brake.
2. Try to move the traction pedal forward or backward.

   The pedal should not move, which indicates that the interlock system is operating correctly. Correct the problem if it is not operating properly.

Checking the Function Control

1. Sit on the seat, move the traction pedal to the NEUTRAL position, move the functional-control lever to the NEUTRAL position, and engage the parking brake.

2. Move the functional-control lever to the MOW position or the TRANSPORT position and try to start the engine.

   The engine should not turnover or start, which indicates that the interlock system is operating correctly. Correct the problem if it is not operating properly.

3. Sit on the seat, move the traction pedal to the NEUTRAL position, move the functional-control lever to the NEUTRAL position, and engage the parking brake.

4. Start the engine and move the functional-control lever to the MOW position or the TRANSPORT position.

   The engine should shut off, which indicates that the interlock system is operating correctly.

   Correct the problem if it is not operating properly.

Checking the Operator's Presence Switch

1. Sit on the seat, move the traction pedal to the NEUTRAL position, move the functional control lever to the NEUTRAL position, and engage the parking brake.

2. Start the engine.

3. Release the parking brake, move the functional control lever to the MOW position, and rise from the seat.

   The engine should shut off, which indicates that the interlock system is operating correctly. Correct the problem if it is not operating properly.

Checking the Raise/Lower Mow Control

1. Sit on the seat, move the traction pedal to the NEUTRAL position, move the functional control lever to the NEUTRAL position, and engage the parking brake.

2. Start the engine.

3. Move the raise/lower mow control forward to lower the cutting units. The cutting units should lower but not start rotating.

   If they start rotating, the interlock system is not operating correctly; correct the problem before operating the machine.

Driving the Machine without Mowing

- Ensure that the cutting units are fully raised.
- Move the functional-control lever to the TRANSPORT position.
- Use the brakes to slow the machine while going down steep hills to avoid loss of control.
- Always approach rough areas at a reduced speed and cross severe undulations carefully.
- Familiarize yourself with the width of the machine. Do not attempt to pass between objects that are close together to prevent costly damage and downtime.

Mowing the Green

Important: **If the leak detector alarm (if equipped on your model) sounds or you notice an oil leak while cutting on a green, immediately raise the cutting units, drive directly off the green, and stop the machine in an area away from the green. Determine the cause of the leak and correct the problem.**

Before mowing greens, find a clear area and practice performing basic machine functions (e.g., starting and stopping the machine, raising and lowering the cutting units, and turning).

Inspect the green for debris, remove the flag from the cup, and determine the best direction to mow. Base the direction to mow on the previous mowing direction. Always mow in an alternate pattern from the previous mowing so that the grass blades are less apt to lay down and therefore be difficult to trap between the reel blades and the bedknife.

Cutting the Green

1. Approach the green with the functional-control lever in the MOW position and the throttle at full speed.

2. Start on 1 edge of the green so that you can use the ribbon procedure of cutting.

   Note: This holds compaction to a minimum and leaves a neat, attractive pattern on the greens.

3. Push forward the raise/lower mow lever as the front edges of the grass baskets cross the outer edge of the green.

   Note: This procedure drops the cutting units to the turf and starts the reels.

   Important: **The center cutting unit drops and raises slightly after the front cutting units do; therefore, you should practice**

gaining the required timing necessary to minimize the cleanup mowing operation.

Note: The delay in raising and lowering the center cutting unit depends on hydraulic fluid temperature. Cold hydraulic fluid results in a longer delay. As the fluid temperature increases, the delay time becomes shorter.

4. Overlap a minimal amount with the previous cut on return passes.

   Note: To assist in maintaining a straight line across the green and keeping the machine an equal distance from the edge of the previous cut, imagine a sight line approximately 1.8 to 3 m (6 to 10 ft) ahead of the machine to the edge of the uncut portion of the green (Figure 27). Include the outer edge of the steering wheel as part of the sight line; i.e., keep the steering wheel edge aligned with a point that is always kept the same distance away from the front of the machine.

5. As the front edges of the baskets cross the edge of the green, pull back the raise/lower mow lever rearward and hold it until all the cutting units have risen. This stops the reels and lifts the cutting units.

   Important: **Time this step correctly so that you do not cut into the fringe area, yet cut as much of the green as possible to minimize the amount of grass left to mow around the outer periphery.**

6. To cut down on operating time and to ease the lineup for the next pass, momentarily turn the machine in the opposite direction, then turn it in the direction of the uncut portion. This movement is a tear-shaped turn (Figure 26), which quickly lines the machine up for your next pass.

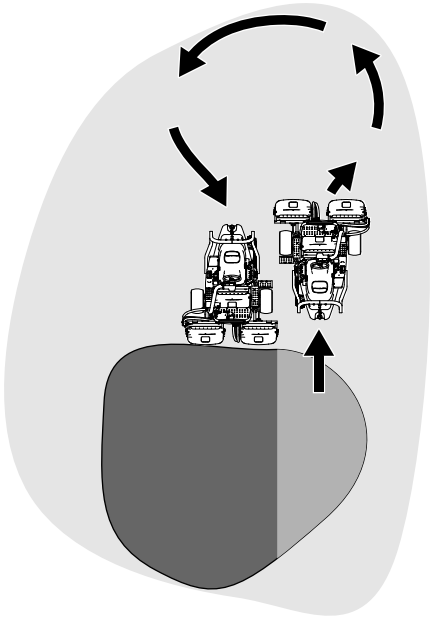

g229671

Figure 26

Note: Try to make as short of a turn as possible, except during warmer weather—a wider arc minimizes the turf bruising.

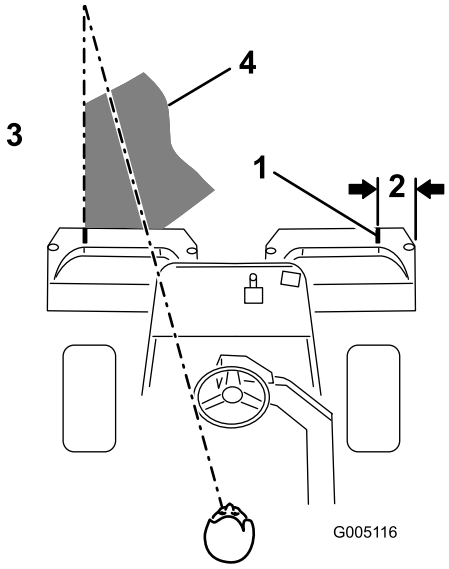

g005116

Figure 27

1. Alignment strip
2. Approximately 12.7 cm (5 inches)
3. Cut grass on the left.
4. Keep a focal spot 2 to 3 m (6 to 10 ft) ahead of the machine.

Note: The steering wheel does not return to its original position after you complete a turn.

Important: **Never stop the machine on a green while the cutting units are engaged, as damage to the turf may result. Stopping the machine on a wet green may leave marks or indentations from the wheels.**

Cutting the Periphery and Finishing the Job

1. Finish cutting the green by mowing the outer periphery. Change the direction of cutting from the previous mowing.

   Note: Use the throttle lever to adjust the machine speed when you cut the periphery. This will match the clip to the green and may reduce triplex ring.

   Note: Always keep weather and turf conditions in mind and be sure to change the direction of mowing from the previous cutting.

2. When finished mowing the outer periphery, tap the raise/lower mow lever rearward to stop the reels, then drive off the green. When all the cutting units are off the green, raise the cutting units.

   Note: This step minimizes grass clumps left on the green.

3. Replace the flag.

4. Empty the grass baskets of all clippings before you transport the machine to the next green.

   Note: Heavy wet clippings place an undue strain on the baskets and add unnecessary weight to the machine, which increases the load on the machine systems (e.g., engine, hydraulic system, and brakes).

After Operation

After Operation Safety

General Safety

- Engage the parking brake, shut off the engine, remove the key, and wait for all movement to stop before you leave the operator's position. Allow the machine to cool before adjusting, servicing, cleaning, or storing it.
- Clean grass and debris from the cutting units and drives to help prevent fires. Clean up oil or fuel spills.
- Shut off the fuel while storing or hauling the machine.
- Disengage the drive to the attachment whenever you are hauling or not using the machine.
- Allow the machine to cool before storing the machine in any enclosure.
- Maintain and clean the seat belt(s) as necessary.
- Do not store the machine or fuel container where there is an open flame, spark, or pilot light, such as on a water heater or on other appliances.

Towing Safety

- Tow only with a machine that has a hitch designed for towing. Do not attach towed equipment except at the hitch point.
- Follow the manufacturer's recommendation for weight limits for towed equipment and towing on slopes. On slopes, the weight of the towed equipment may cause loss of traction and loss of control.
- Never allow children or others in or on towed equipment.
- Travel slowly and allow extra distance to stop when towing.

Towing the Machine

In case of an emergency, you can tow the machine for up to 0.4 km (1/4 mi).

Important: **Do not tow the machine faster than 3 to 5 km/h (2 to 3 mph) to avoid damaging the drive system. If you must move the machine more than 0.4 km (1/4 mi), transport it on a truck or trailer.**

1. Locate the bypass valve on the pump (Figure 28).

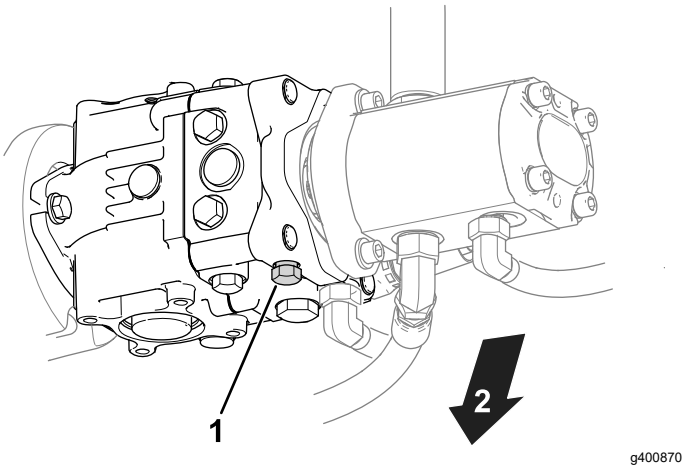

Figure 28

1. Bypass valve
2. Bottom of the machine

2. Open the bypass valve by turning the valve 3 revolutions counterclockwise.
3. Before starting the engine, tighten the bypass valve and torque the valve to 12 N·m (9 ft-lb).

   Important: **Do not start the engine when the bypass valve is open.**

Inspecting and Cleaning after Mowing

After mowing, thoroughly wash the machine with a garden hose without a nozzle so that excessive water pressure does not contaminate and damage the seals and bearings. **Do not wash a warm engine or the electrical connections with water.**

After cleaning the machine, do the following:

- Inspect the machine for possible hydraulic fluid leaks, damage or wear to hydraulic and mechanical components.
- Inspect the cutting units for sharpness.
- Lubricate the brake-shaft assembly with SAE 30 oil or spray lubricant to deter corrosion and help keep the machine performing satisfactorily during the next mowing operation.

Hauling the Machine

- Use care when loading or unloading the machine into a trailer or a truck.
- Use a full-width ramp for loading the machine into a trailer or a truck.
- Tie the machine down securely using straps, chains, cable, or ropes. Both front and rear straps should be directed down and outward from the machine (Figure 29).

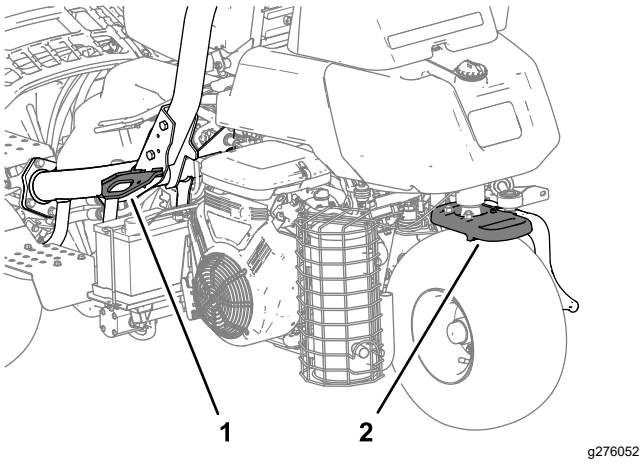

Figure 29

1. Tie-down loop (each side)
2. Rear tie-down loop

Maintenance

⚠ CAUTION

Failure to properly maintain the machine could result in premature failure of machine systems causing possible harm to you or bystanders.

Keep the machine well maintained and in good working order as indicated in these instructions.

Note: Determine the left and right sides of the machine from the normal operating position.

Note: Download a free copy of the electrical or hydraulic schematic by visiting www.Toro.com and searching for your machine from the Manuals link on the home page.

Important: **Refer to your engine owner's manual for additional maintenance procedures.**

⚠ WARNING

If you leave the key in the ignition switch, someone could accidently start the engine and seriously injure you or other bystanders.

Remove the key from the ignition and disconnect the wires from the spark plugs before you do any maintenance. Set the wires aside so that they do not accidentally contact the spark plugs.

Maintenance Safety

- Before you leave the operator's position, do the following:
  - Park the machine on a level surface.
  - Disengage the cutting unit(s).
  - Engage the parking brake.
  - Shut off the engine and remove the key.
  - Wait for all movement to stop.
- Allow machine components to cool before performing maintenance.
- If possible, do not perform maintenance while the engine is running. Keep away from moving parts.
- Support the machine with jack stands whenever you work under the machine.
- Carefully release pressure from components with stored energy.
- Keep all parts of the machine in good working condition and all hardware tightened.
- Replace all worn or damaged decals.
- To ensure safe, optimal performance of the machine, use only genuine Toro replacement parts. Replacement parts made by other manufacturers could be dangerous, and such use could void the product warranty.

Recommended Maintenance Schedule(s)

Maintenance Service Interval	Maintenance Procedure
After the first hour	• Torque the wheel nuts.
After the first 10 hours	• Torque the wheel nuts.
After the first 50 hours	• Check the engine speed (at idle and full throttle).
Before each use or daily	• Inspect the seat belt(s) for wear, cuts, and other damage. Replace the seat belt(s) if any component does not operate properly. • Check the safety-interlock system • Check the safety-interlock system. • Inspect and cleanup after mowing. • Check the engine oil. • Check the tire pressure. • Check the hydraulic-fluid level. • Check the hydraulic lines and hoses. • Check the reel-to-bedknife contact.
Every 50 hours	• Service the air-cleaner foam element (more frequently when operating conditions are dusty or dirty). • Check the battery cable connections.
Every 100 hours	• Service the air-cleaner paper element (more frequently when operating conditions are dusty or dirty). • Change the engine oil and filter.
Every 200 hours	• Torque the wheel nuts.
Every 400 hours	• Grease the machine. • Grease the machine.
Every 500 hours	• Replace the fuel filter (sooner if the fuel flow is restricted).
Every 800 hours	• If you are not using the recommended hydraulic fluid or have ever filled the reservoir with an alternative fluid, change the hydraulic fluid, filter, and tank breather. • Check the engine speed (at idle and full throttle). • Check the valve clearance.
Every 1,000 hours	• Replace the spark plugs. • If you are using the recommended hydraulic fluid, change the hydraulic-fluid filter.
Every 2,000 hours	• If you are using the recommended hydraulic fluid, change the hydraulic fluid.
Yearly	• Burnish the brakes.
Every 2 years	• Check the fuel lines and connections. • Replace moving hoses.

Daily Maintenance Checklist

Duplicate this page for routine use.

Maintenance Check Item	For the week of:						
	Mon.	Tues.	Wed.	Thurs.	Fri.	Sat.	Sun.
Check the safety-interlock operation.							
Check the instrument operation							
Check the leak-detector alarm.							
Check the brake operation.							
Check the fuel level.							
Check the hydraulic-fluid level.							
Check the engine-oil level.							
Clean the engine, air-cooling fins.							
Inspect the air-filter pre-cleaner.							
Check any unusual engine noises.							
Check the reel-to-bedknife adjustment.							
Check the hydraulic hoses for damage.							
Check for fluid leaks.							
Check the tire pressure.							
Check the height-of-cut adjustment.							
Touch-up damaged paint.							

Notation for Areas of Concern		
Inspection performed by:		
Item	Date	Information

Lubrication

Greasing the Machine

Service Interval: Every 400 hours

Lubricate the grease fitting with No. 2 lithium grease.

1. Wipe the grease fitting clean so that you do not force foreign matter into the bearing or bushing (Figure 30).

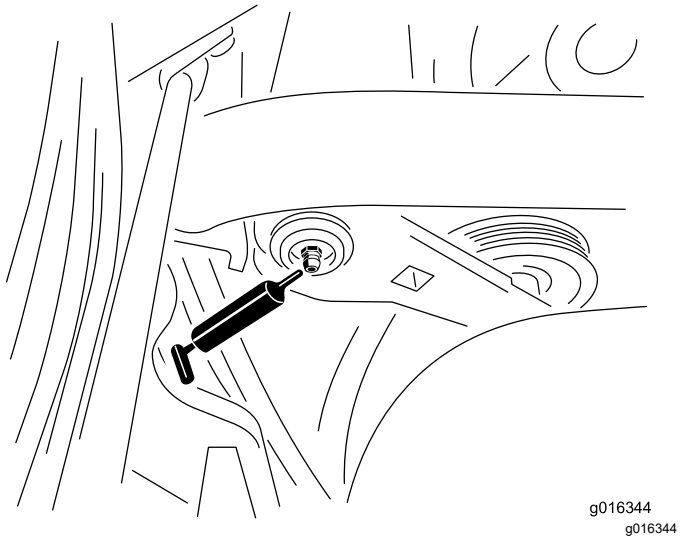

Figure 30

Left side of the gasoline model shown; your model may vary

2. Pump grease into the bearing or bushing until the grease is visible. Wipe up excess grease.

Engine Maintenance

Engine Safety

- Shut off the engine before checking the oil or adding oil to the crankcase.
- Do not change the governor speed or overspeed the engine.

Servicing the Air Cleaner

Service Interval: Every 50 hours—Service the air-cleaner foam element (more frequently when operating conditions are dusty or dirty).

Every 100 hours—Service the air-cleaner paper element (more frequently when operating conditions are dusty or dirty).

1. Clean the air-cleaner cover (Figure 31).

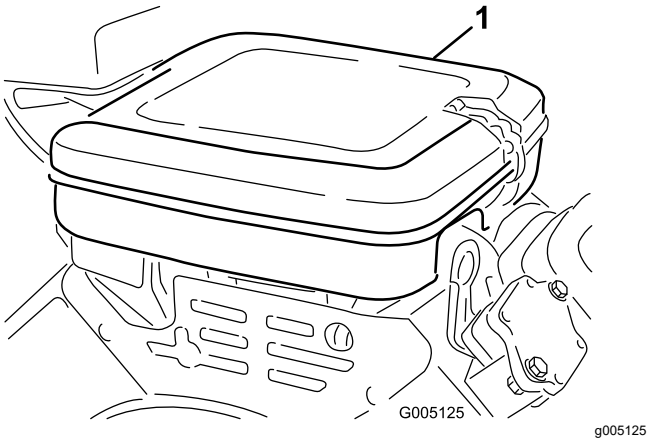

Figure 31

1. Air-cleaner cover

2. Release the locking clips and remove the air-cleaner cover.
3. Remove the wing nut securing the elements to the air-cleaner body (Figure 32).
4. If the foam element is dirty, remove it from the paper element (Figure 32). Clean it thoroughly, as follows:
   A. Wash the foam element in a solution of liquid soap and warm water. Squeeze it to remove dirt.
   B. Dry it by wrapping it in a clean rag. Squeeze the rag and foam element dry.

   Important: **When drying the foam element, do not twist it; the foam may tear.**

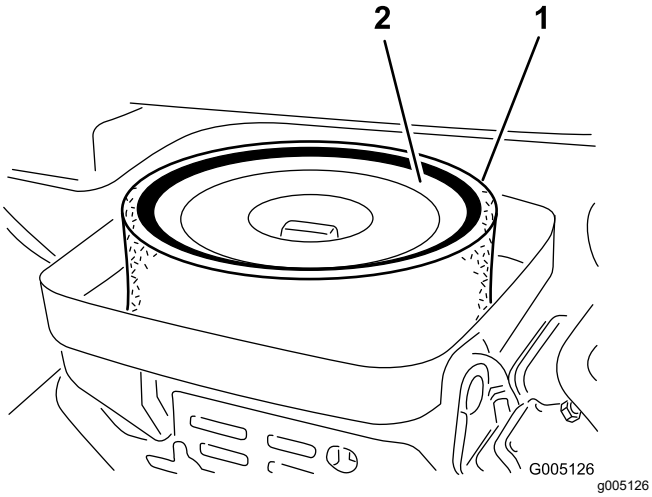

Figure 32

1. Foam element
2. Paper element

5. Check the condition of the paper element. Clean it by gently tapping it on a flat surface or replace it if needed.
6. Install the foam element, paper element, wing nut, and air-cleaner cover.

   Important: **Do not operate the engine without the air-cleaner element because extreme engine wear and damage will likely result.**

Servicing the Engine Oil

The engine is shipped with oil in the crankcase; however, you must check the oil level before and after starting the engine the first time.

Engine Oil Specification

API Oil Service Classification: SJ or higher

Oil Viscosity: SAE 30

Note: Use any high-quality detergent oil.

Checking the Engine Oil

1. Park the machine on a level surface, shut off the engine and remove the key.
2. Unscrew the dipstick, remove it, and wipe it with a clean rag.
3. Insert the dipstick into the dipstick tube and thread it into the tube (Figure 33).

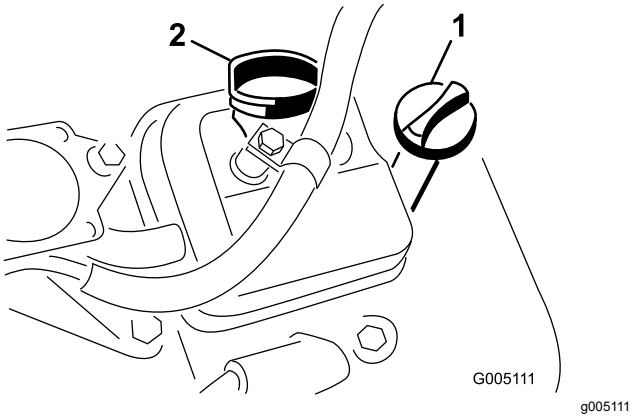

Figure 33

1. Dipstick
2. Filler cap

4. Unscrew the dipstick, pull it out of the tube, and check the oil level.
5. If the oil level is low, remove the filler cap from the valve cover and add oil into the engine through the filler neck until the oil level is up to the FULL mark on the dipstick.

   Add the oil slowly and check the level often during this process.

   Important: **Do not overfill the engine with oil.**
6. Install the filler cap and dipstick.

Changing the Engine Oil and Filter

Service Interval: Every 100 hours

Engine oil quantity: 1.65 L (1-3/4 US qt) with filter

1. Remove the drain plug (Figure 34) and let the oil flow into a drain pan.

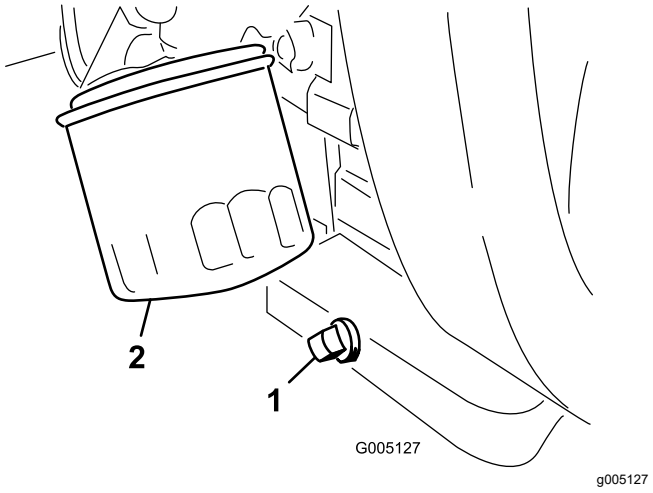

Figure 34

1. Drain plug
2. Oil filter

2. Clean the threads of the drain plug, apply PTFE sealant, and install the drain plug (Figure 34).

3. Remove the oil filter (Figure 34).
4. Apply a light coat of clean oil to the new filter gasket.
5. Screw the filter on by hand until the gasket contacts the filter adapter, then tighten it 3/4 to 1 turn further. **Do not overtighten it**.
6. Add oil to the crankcase; refer to Checking the Engine Oil (page 36) and Engine Oil Specification (page 36).
7. Dispose of the oil filter and used oil properly.

Replacing the Spark Plugs

Service Interval: Every 1,000 hours

Spark plug specification: Champion RC 14YC

Air gap specification: 0.76 mm (0.030 inch)

1. Clean the area around the spark plugs so that foreign matter cannot fall into the cylinder.
2. Pull the wires off the spark plugs and remove the plugs.
3. Check the condition of the side electrode, center electrode, and center electrode insulator to ensure that there is no damage.

   Important: **Replace a cracked, fouled, dirty, or otherwise malfunctioning spark plug. Do not sand blast, scrape, or clean electrodes by using a wire brush because grit may eventually release from the plug, fall into the cylinder, and damage the engine.**
4. Set the air gap between the center and side of the electrodes at 0.76 mm (0.030 inches) as shown in Figure 35.

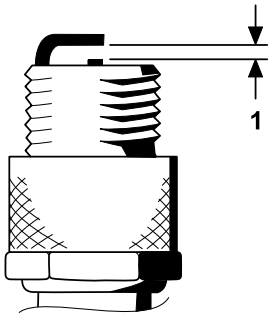

g251456

Figure 35

1. Set air gap to 0.76 mm (0.030 inches).

5. Install the spark plug and gasket seal, and torque the plug to 23 N·m (200 in-lb).

Fuel System Maintenance

Replacing the Fuel Filter

Service Interval: Every 500 hours (sooner if the fuel flow is restricted).

The in-line fuel filter is in the fuel line between the fuel tank and carburetor (Figure 36).

⚠ DANGER

In certain conditions, fuel is extremely flammable and highly explosive. A fire or explosion from fuel can burn you and others and can damage property.

- **Drain fuel from the fuel tank when the engine is cold. Do this outdoors in an open area. Wipe up any fuel that spills.**
- **Never smoke when draining fuel, and stay away from an open flame or where a spark may ignite the fumes.**

1. Close the fuel-shutoff valve (Figure 36).

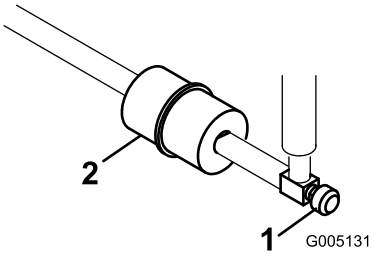

g005131

Figure 36

1. Fuel-shutoff valve
2. Fuel filter

2. Place a drain pan under the filter, loosen the hose clamp on the carburetor side of filter, and remove the fuel line from the filter (Figure 36).
3. Loosen the other hose clamp and remove the filter (Figure 36).
4. Install the new filter with the arrow on the filter body pointing away from the fuel tank.

Inspecting the Fuel Lines and Connections

Service Interval: Every 2 years

Inspect the fuel lines for deterioration, damage, or loose connections.

Electrical System Maintenance

Electrical System Safety

- Disconnect the battery before repairing the machine. Disconnect the negative terminal first and the positive last. Connect the positive terminal first and the negative last.
- Charge the battery in an open, well-ventilated area, away from sparks and flames. Unplug the charger before connecting or disconnecting the battery. Wear protective clothing and use insulated tools.

Disconnecting the Battery

⚠ WARNING

Battery terminals or metal tools could short against metal components, causing sparks. Sparks can cause the battery gasses to explode, resulting in personal injury.

- **When removing or installing the battery, do not allow the battery terminals to touch any metal parts of the machine.**
- **Do not allow metal tools to short between the battery terminals and metal parts of the machine.**

⚠ WARNING

Incorrect battery cable routing could damage the machine and cables causing sparks. Sparks can cause the battery gasses to explode, resulting in personal injury.

Always disconnect the negative (black) battery cable before disconnecting the positive (red) cable.

1. Remove the negative battery cable from the battery post (Figure 37).

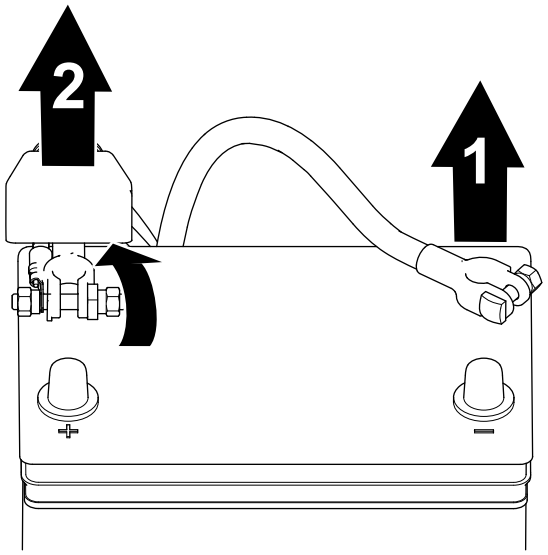

g253380

Figure 37

1. Negative battery cable
2. Positive battery cable

2. Lift the insulator and remove the positive battery cable from the battery post (Figure 37).

Connecting the Battery

⚠ WARNING

Incorrect battery cable routing could damage the machine and cables causing sparks. Sparks can cause the battery gasses to explode, resulting in personal injury.

Always connect the positive (red) battery cable before connecting the negative (black) cable.

1. Connect the positive cable to the battery and tighten the battery-clamp nut (Figure 38).

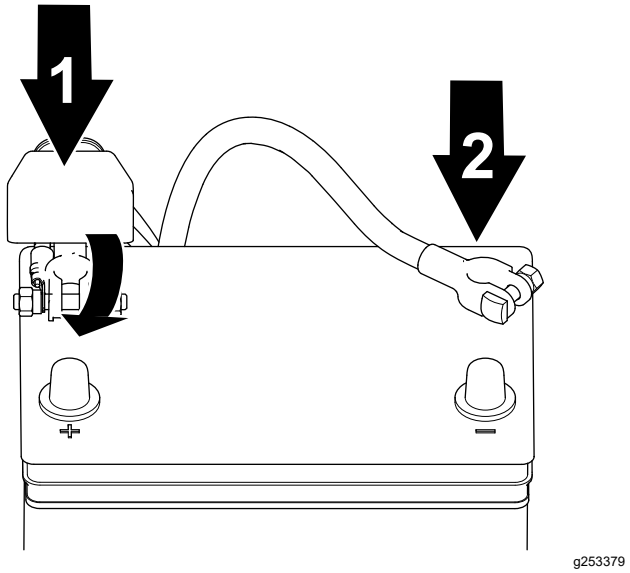

Figure 38

1. Positive battery cable
2. Negative battery cable

2. Connect the negative cable to the battery and tighten the battery-clamp nut (Figure 38).

Charging the Battery

⚠ WARNING

Battery terminals or metal tools could short against metal machine components, causing sparks. Sparks can cause the battery gasses to explode, resulting in personal injury.

- **When removing or installing the battery, do not allow the battery terminals to touch any metal parts of the machine.**
- **Do not allow metal tools to short between the battery terminals and metal parts of the machine.**

1. Disconnect the battery; refer to Disconnecting the Battery (page 38).
2. Remove the wing nuts and rods that secure the battery to the platform (Figure 39) and lift out the battery.

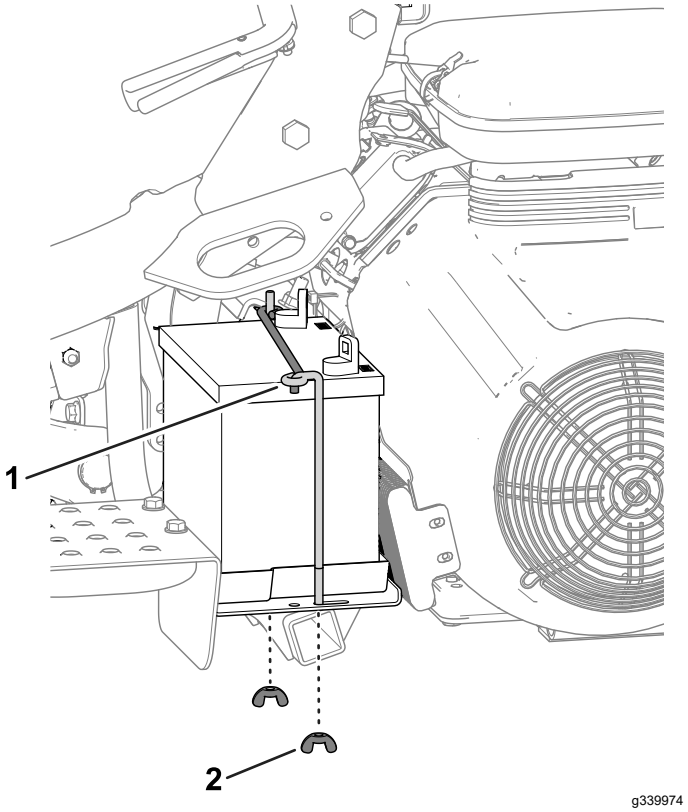

Figure 39

1. Rods
2. Wing nuts

3. Connect a 2 to 4 A battery charger to the battery posts. Charge the battery for at least 2 hours at 4 A or for at least 4 hours at 2 A until the specific gravity is 1.250 or higher and the temperature is at least 16°C (60°F) with all cells gassing freely.

   ⚠ WARNING

   Charging the battery produces gasses that can explode.

   Never smoke near the battery and keep sparks and flames away from the battery.

   Important: **If you do not charge the battery for at least the time specified in this step, you may reduce the life of the battery.**

4. When the battery is charged, disconnect the charger from the electrical outlet and battery posts.
5. Place the battery on the battery tray and secure it with the previously removed rods and fasteners (Figure 39).
6. Connect the battery; refer to Connecting the Battery (page 38).

Locating the Fuses

The fuses in the electrical system are located under the seat (Figure 40).

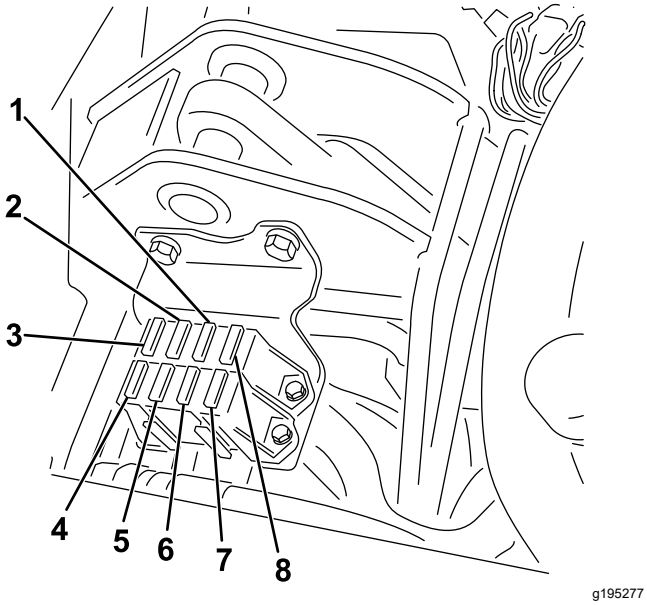

Figure 40

1. Diagnostic lights, and glow—7.5 A
2. Reel engage, lift/lower, fan—7.5 A
3. Lift reel, E-reel enable, and over temp—7.5 A
4. No fuse
5. Lights and leak detector—15 A
6. System—10 A
7. Ignition switch and start/run—10 A
8. ECM logic and power—2 A

The fuses for the E-reel wire harness are located under the right side-cover, below the console (Figure 41).

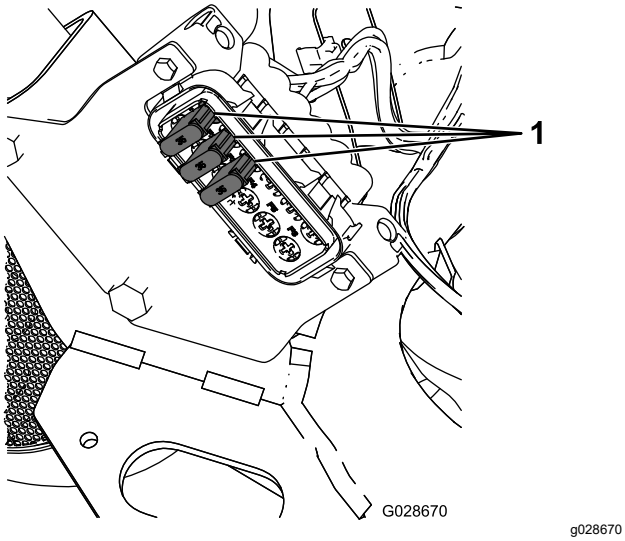

Figure 41

1. Fuses—35 A

Jump-Starting the Machine

If you need to jump start the machine, you can use the alternate-positive post (located on the starter solenoid) instead of the positive battery post (Figure 42).

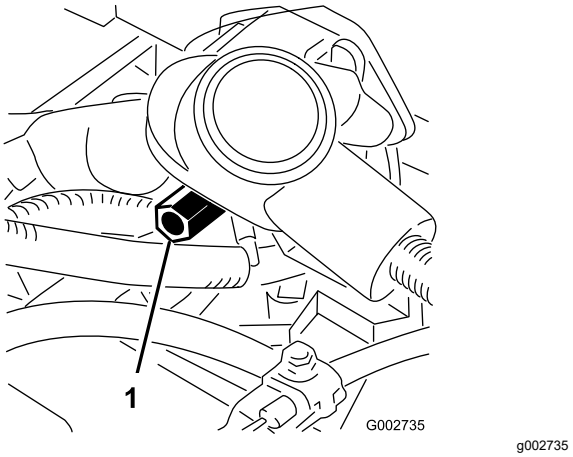

Figure 42

1. Alternate-positive post

Drive System Maintenance

Checking the Tire Pressure

Service Interval: Before each use or daily

Vary the tire pressure for all 3 wheels, depending upon your turf conditions, from a minimum of 83 to a maximum of 110 kPa (12 psi to 16 psi).

Checking the Torque of the Wheel Nuts

Service Interval: After the first hour

After the first 10 hours

Every 200 hours

⚠ WARNING

Failure to maintain proper torque of the wheel nuts could result in personal injury.

Torque the wheel nuts to the specified torque at the specified intervals.

Wheel nut torque specification: 95 to 122 N·m (70 to 90 ft-lb)

Note: To ensure even distribution, torque the wheel nuts in a X pattern.

Adjusting the Transmission for Neutral

If the machine creeps when the traction-control pedal is in the NEUTRAL position, adjust the neutral-return mechanism.

1. Ensure that the bypass valve is closed.
2. Lift the machine and support it at the frame so that 1 of the front wheels is off the floor.

   Note: If the machine is equipped with a 3-Wheel Drive Kit, also raise and block the rear wheel.
3. Start the engine, move the throttle to the SLOW position, and ensure that the front wheel that is off the floor is not rotating.
4. If the wheel is rotating, shut off the engine and proceed as follows:

   A. Loosen the nut securing the eccentric to the top of the hydrostat (Figure 43).

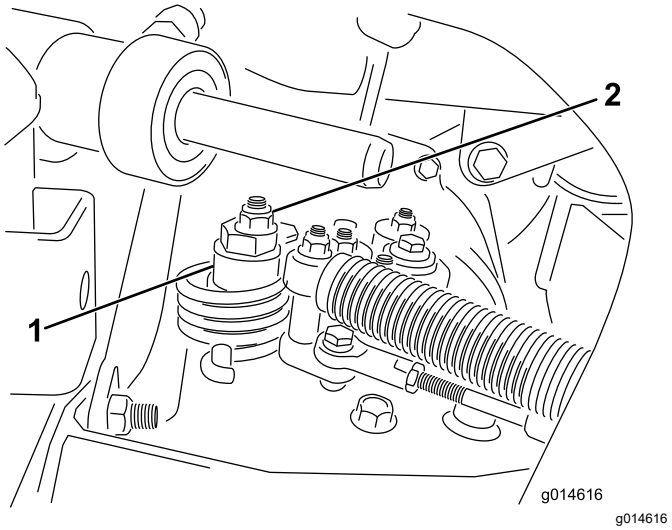

Figure 43

1. Eccentric
2. Locknut

   B. Move the functional-control lever to the NEUTRAL position and the throttle to the SLOW position. Start the engine.

   C. Rotate the eccentric until creep does not occur in either direction. When the wheel stops rotating, tighten the nut locking the eccentric and the adjustment (Figure 43). Verify the adjustment with the throttle in the SLOW and FAST position.

   Note: If the wheel still turns when the eccentric is at the maximum adjustment, contact your authorized Toro distributor or refer to the *Service Manual* for further adjustment.

Adjusting the Transport Speed

Obtaining the Maximum Transport Speed

The traction pedal comes adjusted for maximum-transport speed, but you may need to adjust it if the pedal reaches full stroke before it contacts the pedal stop, or if you want to a decrease the transport speed.

To obtain the maximum-transport speed, put the functional control lever in the TRANSPORT position and press down on the traction pedal. If the pedal contacts the stop (Figure 44) before you feel tension on the cable, perform the following adjustment procedure:

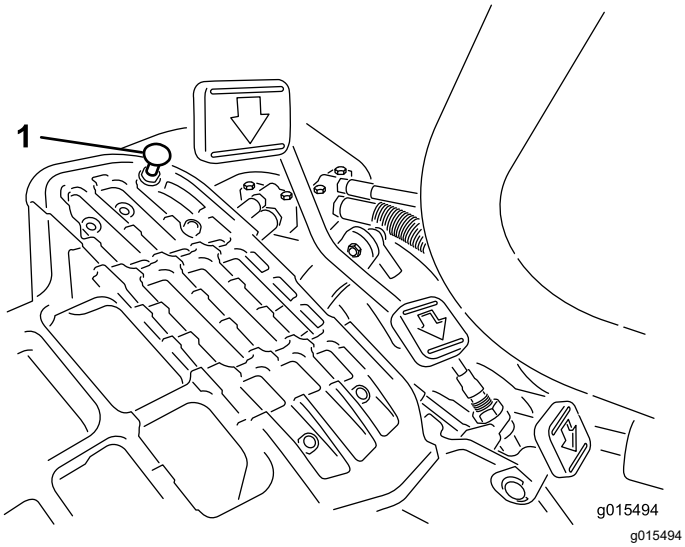

Figure 44

1. Pedal stop

1. Put the functional-control lever in the TRANSPORT position and loosen the locknut securing the pedal stop to the floor plate (Figure 44).
2. Tighten the pedal stop until it does not contact the traction pedal.
3. Continue applying a light load on the transport pedal and adjust the pedal stop so it contacts the pedal rod and tighten the nuts.

   Important: **Ensure that the tension on the cable is not excessive or you will reduce the cable life.**

Reducing the Transport Speed

1. Press down on the traction pedal and loosen the locknut securing the pedal stop to the floor plate.
2. Loosen the pedal stop until you obtain the desired transport speed.
3. Tighten the locknut securing the pedal stop.

Adjusting the Mowing Speed

The mow speed is set to 3.8 mph at the factory.

You can adjust the forward moving speed from 0 to 8 km/h (0 to 5 mph).

1. Loosen the jam nut on the trunnion bolt (Figure 45).
2. Loosen the nut securing the lock and mow brackets on the pedal pivot.

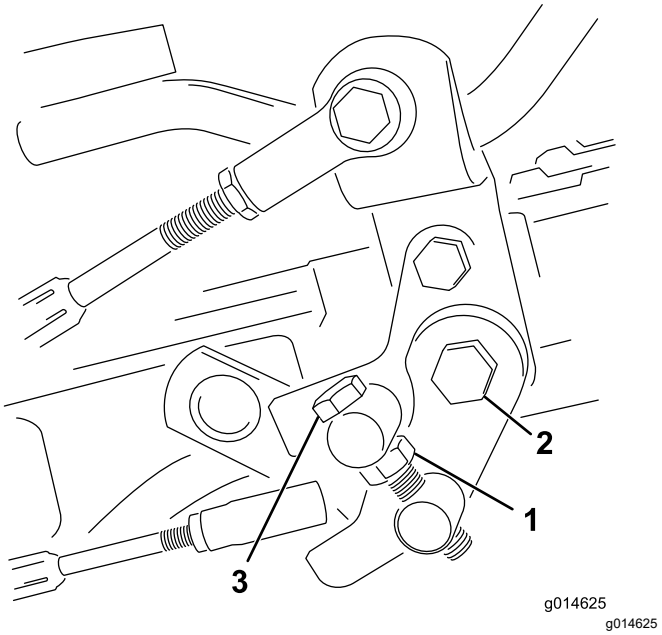

Figure 45

1. Jam nut
2. Nut
3. Trunnion bolt

3. Rotate the trunnion bolt clockwise to reduce the mowing speed and counterclockwise to increase the mowing speed.
4. Tighten the jam nut on the trunnion bolt and the nut on the pedal pivot to lock the adjustment (Figure 45). Check the adjustment and adjust as required.

Brake Maintenance

Burnishing the Brakes

Service Interval: Yearly

Firmly apply the brakes and drive the machine at mowing speed until the brakes are hot, as indicated by their smell. You may need to adjust the brakes after the break-in period; refer to Adjusting the Brakes (page 43).

Adjusting the Brakes

If the brake fails to hold the machine while parked, you can adjust the brakes using the bulkhead fitting near the brake drum; contact your Authorized Service Dealer or refer to the *Service Manual* for more information.

Note: Burnish the brakes annually; refer to Burnishing the Brakes (page 43).

Hydraulic System Maintenance

Hydraulic System Safety

- Seek immediate medical attention if fluid is injected into skin. Injected fluid must be surgically removed within a few hours by a doctor.
- Ensure that all hydraulic-fluid hoses and lines are in good condition and all hydraulic connections and fittings are tight before applying pressure to the hydraulic system.
- Keep your body and hands away from pinhole leaks or nozzles that eject high-pressure hydraulic fluid.
- Use cardboard or paper to find hydraulic leaks.
- Safely relieve all pressure in the hydraulic system before performing any work on the hydraulic system.

Servicing the Hydraulic Fluid

Important: **Regardless of the hydraulic fluid type used, any traction unit used for off-green applications, verticutting or used during ambient temperatures above 29° C (85°F) should have the Oil Cooler Kit installed; refer to 5 Installing the Oil Cooler (page 12).**

Hydraulic Fluid Specifications

The reservoir is filled at the factory with high-quality hydraulic fluid. Check the level of the hydraulic fluid before you first start the engine and daily thereafter; refer to Checking the Hydraulic-Fluid Level (page 44).

Recommended hydraulic fluid: Toro PX Extended Life Hydraulic Fluid; available in 19 L (5 US gallon) pails or 208 L (55 US gallon) drums.

Note: A machine using the recommended replacement fluid requires less frequent fluid and filter changes.

Alternative hydraulic fluids: If Toro PX Extended Life Hydraulic Fluid is not available, you may use another conventional, petroleum-based hydraulic fluid having specifications that fall within the listed range for all the following material properties and that it meets industry standards. Do not use synthetic fluid. Consult with your lubricant distributor to identify a satisfactory product.

Note: Toro does not assume responsibility for damage caused by improper substitutions, so use

products only from reputable manufacturers who will stand behind their recommendation.

High Viscosity Index/Low Pour Point Anti-wear Hydraulic Fluid, ISO VG 46

Material Properties:

Viscosity, ASTM D445	cSt @ 40°C (104°F) 44 to 48
Viscosity Index ASTM D2270	140 or higher
Pour Point, ASTM D97	-37°C to -45°C (-34°F to -49°F)
Industry Specifications:	Eaton Vickers 694 (I-286-S, M-2950-S/35VQ25 or M-2952-S)

Note: Many hydraulic fluids are almost colorless, making it difficult to spot leaks. A red dye additive for the hydraulic fluid is available in 20 ml (0.67 fl oz) bottles. A bottle is sufficient for 15 to 22 L (4 to 6 US gallons) of hydraulic fluid. Order Part No. 44-2500 from your authorized Toro distributor.

Important: **Toro Premium Synthetic Biodegradable Hydraulic Fluid is the only synthetic biodegradable fluid approved by Toro. This fluid is compatible with the elastomers used in Toro hydraulic systems and is suitable for a wide-range of temperature conditions. This fluid is compatible with conventional mineral oils, but for maximum biodegradability and performance, the hydraulic system should be thoroughly flushed of conventional fluid. The oil is available in 19 L (5 US gallons) pails or 208 L (55 US gallons) from your authorized Toro distributor.**

Checking the Hydraulic-Fluid Level

The hydraulic-fluid reservoir is filled at the factory with approximately 25.7 L (6.8 US gallons) of high quality hydraulic fluid. Before operating the machine each day, check the level of the hydraulic fluid. Your machine has a dipstick in the hydraulic-fluid reservoir (behind the seat on the left side) that is used to check the hydraulic-fluid level. The fluid should be between the dipstick marks; if not, add the appropriate fluid.

Important: **To prevent system contamination, clean the top of the hydraulic fluid containers before puncturing them. Ensure that the pour spout and funnel are clean.**

1. Position the machine on a level surface.

   Note: Ensure that the machine has cooled down so that the fluid is cold.

2. Locate the dipstick on the top of the main hydraulic tank (Figure 46) and proceed to step 3.

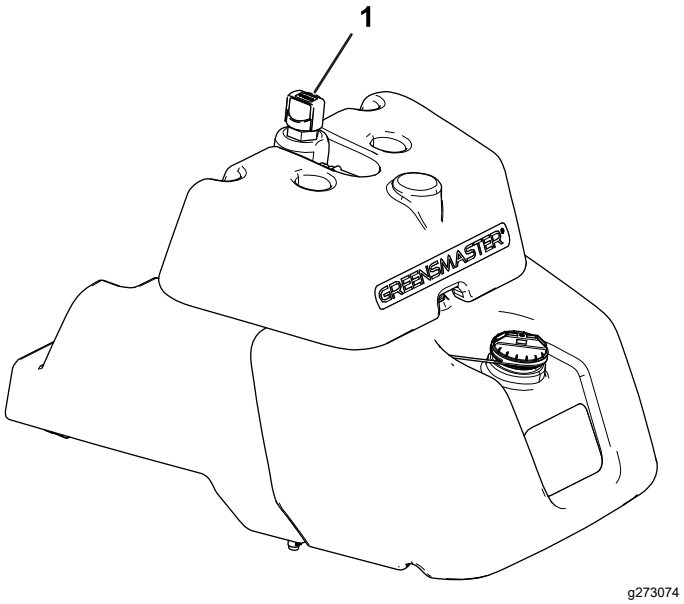

Figure 46

1. Dipstick

3. Remove the dipstick and wipe it with a clean rag, then screw the dipstick back into the tank.
4. Remove the dipstick and check the fluid level. If the fluid is between the marks on the dipstick, the level is sufficient. If the fluid level is not between the marks, more fluid is needed.
5. Remove the dipstick from the hydraulic fluid tank and slowly fill the tank with the appropriate high-quality hydraulic fluid until the level is between the 2 marks on the dipstick.

   Note: Do not mix fluids.

6. Install the cap.

   Note: Perform a close visual inspection of the hydraulic components. Inspect them for issues (e.g., leaks, loose fasteners, missing parts, and improperly routed lines). Make any necessary corrections.

Changing the Hydraulic Fluid and Filter

Service Interval: Every 800 hours—If you **are not** using the recommended hydraulic fluid or have ever filled the reservoir with an alternative fluid, change the hydraulic fluid, filter, and tank breather.

Every 1,000 hours—If you **are** using the recommended hydraulic fluid, change the hydraulic-fluid filter.

Every 2,000 hours—If you **are** using the recommended hydraulic fluid, change the hydraulic fluid.

Hydraulic Fluid Capacity: 25.7 L (6.8 US gallons)

If the fluid becomes contaminated, have your authorized Toro distributor flush the system. Contaminated fluid looks milky or black when compared to clean fluid.

1. Clean the area around the filter mounting area (Figure 47). Place a drain pan under the filter and remove the filter.

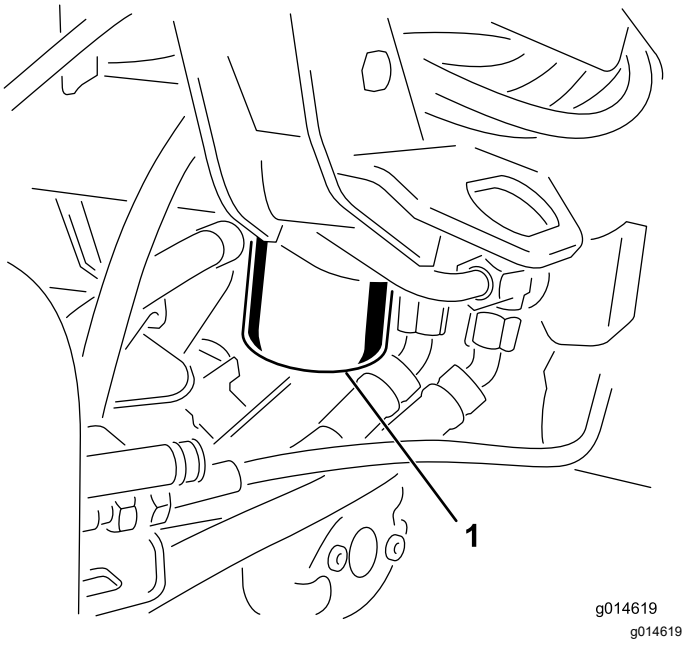

Figure 47

1. Hydraulic-fluid filter

Note: If you will not be draining the fluid, disconnect and plug the hydraulic line going to the filter.

2. Fill the replacement filter with the appropriate hydraulic fluid, lubricate the sealing gasket, and hand turn it until the gasket contacts the filter head. Then tighten it 3/4 turn further.
3. Fill the hydraulic reservoir with hydraulic fluid; refer to Hydraulic Fluid Specifications (page 43) and Checking the Hydraulic-Fluid Level (page 44).
4. Start the machine and run it at idle for 3 to 5 minutes to circulate the fluid and remove any air trapped in the system. Shut off the engine and check the fluid level.
5. Dispose of the fluid and filter properly.

Checking the Hydraulic Lines and Hoses

⚠ WARNING

Hydraulic fluid escaping under pressure can penetrate skin and cause injury.

- **Get immediate medical help if fluid is injected into skin.**
- **Ensure that all hydraulic fluid hoses and lines are in good condition and all hydraulic connections and fittings are tight before applying pressure to the hydraulic system.**
- **Keep your body and hands away from pinhole leaks or nozzles that eject high-pressure hydraulic fluid.**
- **Use cardboard or paper to find hydraulic leaks.**
- **Safely relieve all pressure in the hydraulic system before performing any work on the hydraulic system.**

Check the hydraulic lines and hoses daily for leaks, kinked lines, loose mounting supports, wear, loose fittings, weather deterioration, and chemical deterioration. Make all necessary repairs before operating the machine.

Checking the Leak Detector

The leak detector system is designed to assist in early detection of hydraulic-fluid-system leaks. If the fluid level in the main hydraulic reservoir is lowered by 118 to 177 ml (4 to 6 oz), the float switch in the tank will close. After a 1 second delay, the alarm sounds, alerting the operator (Figure 50). Expansion of fluid, due to normal heating during machine operation, causes the fluid to transfer into the auxiliary fluid reservoir. The fluid returns to the main tank when you turn off the ignition switch.

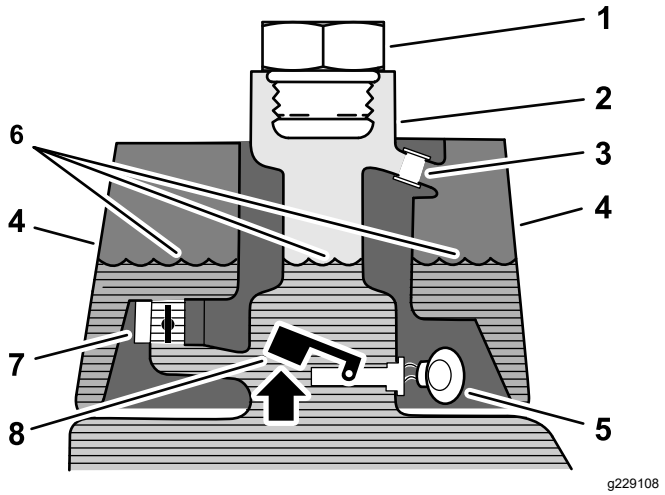

Figure 48
Before Starting (fluid cold)

1. Filler plug
2. Filler neck
3. Overflow tube
4. Leak-detector tank
5. Warning buzzer—no sound
6. Fluid level (cold)
7. Solenoid-return valve (open)
8. Float switch (raised—open)

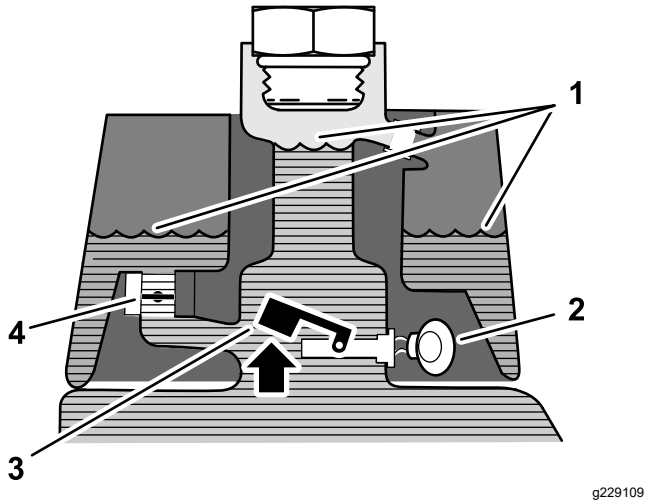

Figure 49
Normal Operation (fluid warm)

1. Fluid level (warm)
2. Solenoid-return valve (closed)
3. Warning buzzer
4. Float switch (raised—open)

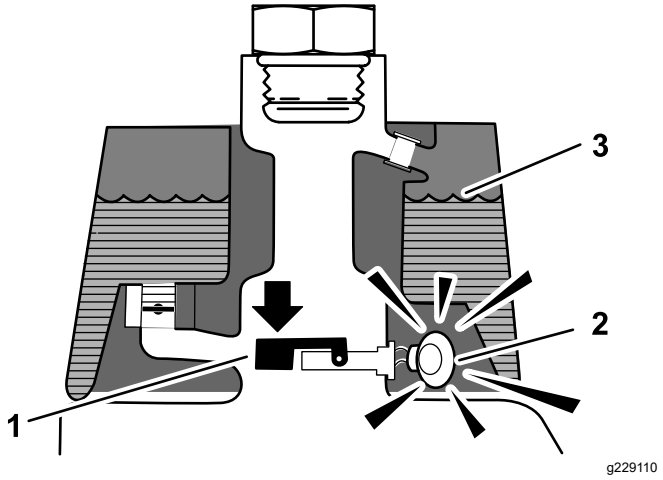

Figure 50
Leak Alert!

1. Float switch (down—closed) Fluid level down 118 to 177 ml (4 to 6 oz)
2. Warning buzzer
3. Fluid level (warm)

Checking the System Operation

1. With ignition switch in the ON position, move the leak detector switch rearward and hold. After the 1-second delay elapses, the alarm should sound.
2. Release the leak-detector switch.

Checking the Leak-Detector-System Operation

1. Move the ignition switch to the ON position. Do not start the engine.
2. Remove the hydraulic-tank cap from the neck of the tank.
3. Insert a clean rod or screwdriver into the tank neck and gently push down on the float switch (Figure 51); the alarm should sound after the 1-second delay.

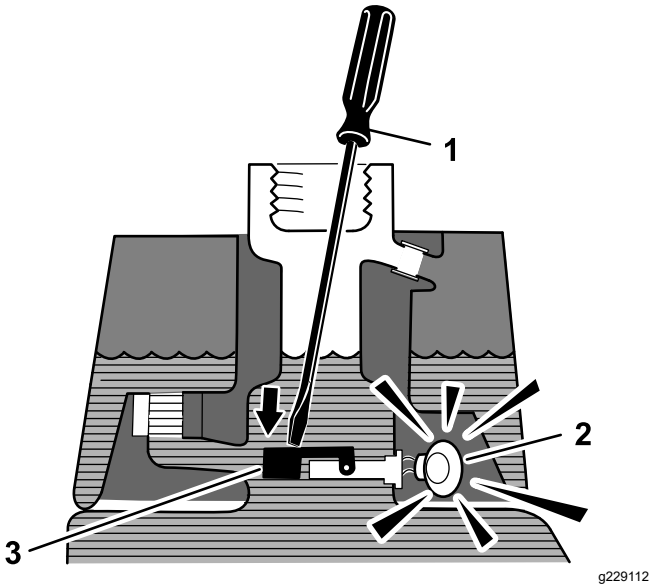

Figure 51

1. Clean rod or screwdriver
2. Warning buzzer
3. Press down on the float switch

4. Release the float; the alarm should stop sounding.
5. Install the hydraulic-tank cap.
6. Move the ignition switch to the OFF position.

Operating the Leak Detector

The leak detector alarm may sound for 1 of the following reasons:

- A leak of 118 to 177 ml (4 to 6 oz) has occurred.
- The fluid level in the main reservoir is reduced by 118 to 177 ml (4 to 6 oz) due to contraction of the fluid by cooling.

If the alarm sounds, turn off the machine as quickly as possible and inspect it for leaks. If the alarm sounds while operating on a green, drive off the green first. Determine the source of the leak and repair it before continuing operation.

If you do not find a leak and suspect a false alarm, move the ignition switch to the OFF position and allow the machine to stand for 1 to 2 minutes to allow the fluid levels to stabilize. Then start the machine and operate it in a non-sensitive area to confirm that no leak exists.

False alarms, due to fluid contraction, may be caused by extended idling of the machine after normal operation. A false alarm may also occur if you work the machine at a reduced workload after an extended period of a heavier workload. To avoid false alarms, turn the machine off rather than idling for extended periods.

Cutting Unit Maintenance

Blade Safety

A worn or damaged blade or bedknife can break, and a piece could be thrown toward you or bystanders, resulting in serious personal injury or death.

- Inspect the blades and bedknives periodically for excessive wear or damage.
- Use care when checking the blades. Wear gloves and use caution when servicing them. Only replace or backlap the blades and bedknives; never straighten or weld them.
- On machines with multiple cutting units, take care when rotating a cutting unit; it can cause the reels in the other cutting units to rotate.

Installing and Removing the Cutting Units

Note: When sharpening, setting the height-of-cut, or performing other maintenance procedures on the cutting units, store the cutting unit reel motors in the storage location on the front of the suspension arms to prevent damage to them.

Important: **Do not raise the suspension to the transport position when the reel motors are in the holders in the machine frame. Damage to the motors or hoses could result.**

Important: **Whenever you need to tip the cutting unit, prop up rear of cutting unit to ensure that the nuts on the bedbar adjusting screws are not resting on work surface (Figure 52).**

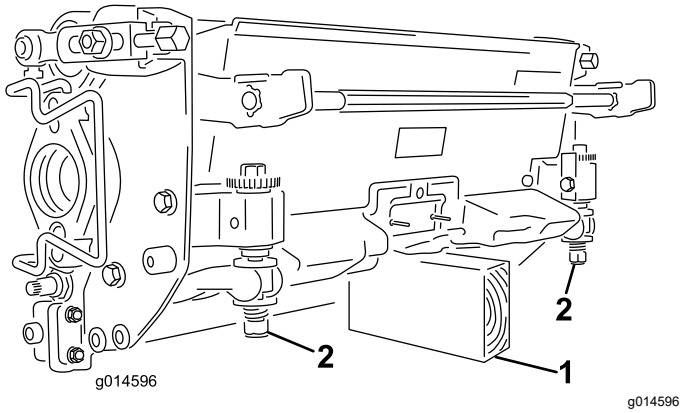

Figure 52

1. Prop (not provided)
2. Bedbar-adjusting-screw nut

Installing the Electrical Counterweights

1. Remove the existing counterweight from the cutting unit and install the counterweight so that the threaded holes face upward (Figure 53).

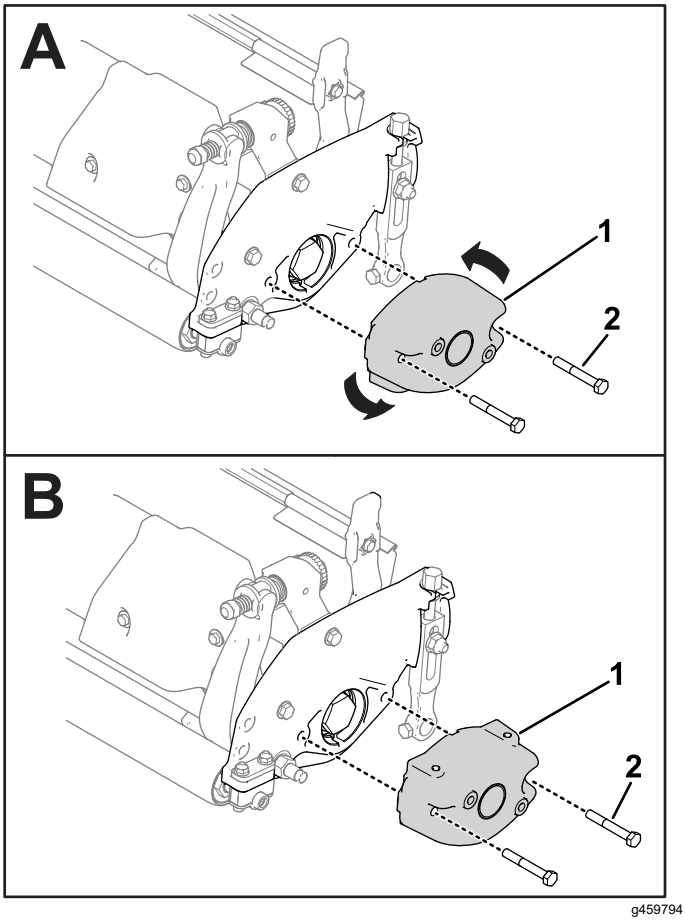

Figure 53

1. Existing counterweight
2. Bolt

2. Secure the electrical counterweight to the existing counterweight with 2 capscrews as shown in Figure 54.

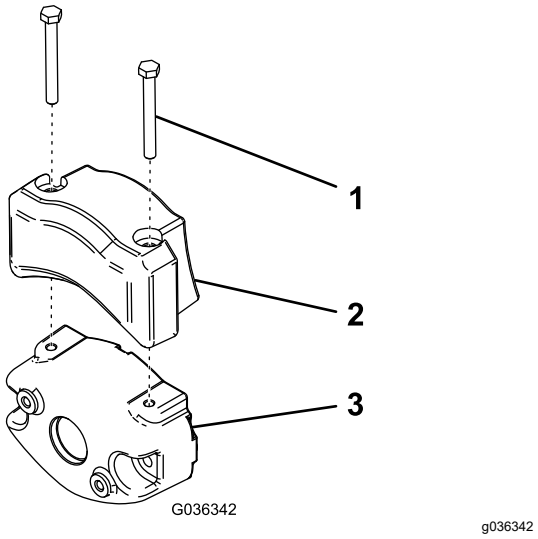

Figure 54

1. Capscrew
2. Electrical counterweight
3. Existing counterweight

Installing the Cutting Units

1. Disconnect the cutting unit power disconnect couplers; refer to Cutting Unit Power Disconnect Connectors (page 23).

⚠ CAUTION

If you do not disconnect the power to the cutting units, someone could accidentally start the cutting unit, causing serious injury to hands and feet.

Always separate the cutting unit power disconnect couplers before working on the cutting units.

2. Lift up on the foot rest and swing it open, allowing access to the center cutting unit position (Figure 55).

⚠ CAUTION

The foot rest can pinch fingers if it falls into the closed position.

Keep your fingers clear of the area where the foot rest seats while it is open.

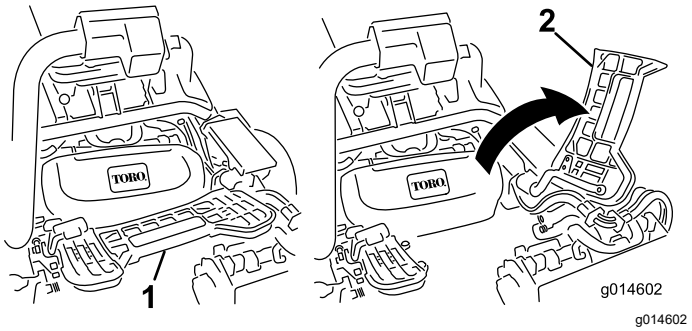

Figure 55

1. Footrest—closed
2. Footrest—open

3. Position the cutting unit under the center suspension arm.
4. With the latches on the suspension-arm bar pointing up (i.e., open) (Figure 56), push the suspension arm down so that the bar fits over the bar across the top of the cutting unit (Figure 57).

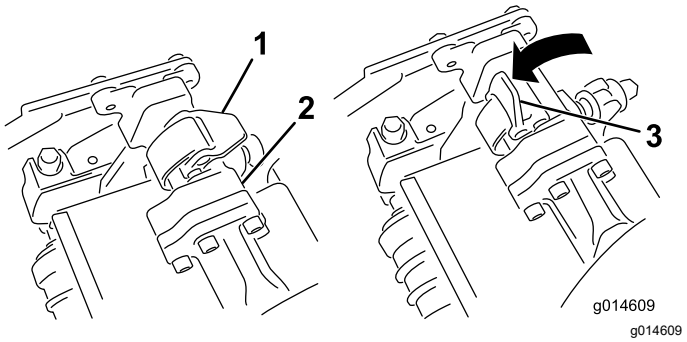

Figure 56

1. Latch—closed position
2. Suspension-arm bar
3. Latch—open position

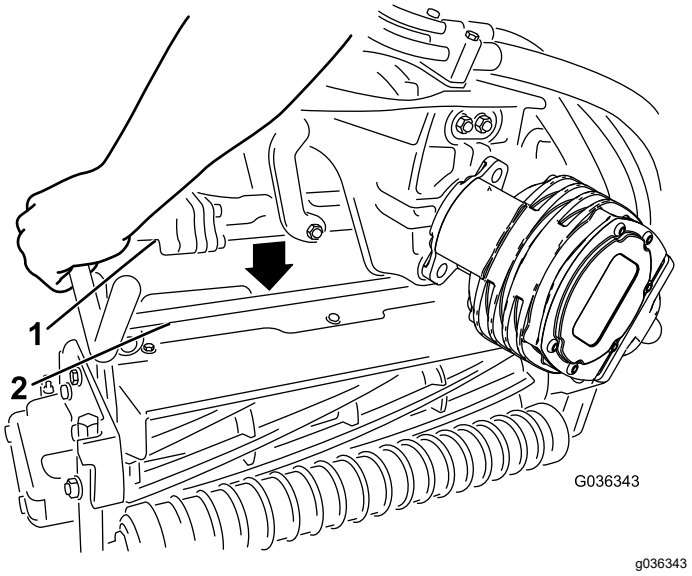

Figure 57

1. Suspension-arm bar
2. Cutting-unit bar

5. Close the latches down and around the cutting-unit bar and lock them in place (Figure 56).

   Note: You can hear a click and feel when the latches are properly locked in place.

6. Coat the spline shaft of the cutting unit motor with clean grease (Figure 58).
7. Insert the motor into the left side of the cutting unit (as viewed from the operator's position) and pull the motor retaining bar on the cutting unit toward the motor until you hear a click from both sides of the motor (Figure 58).

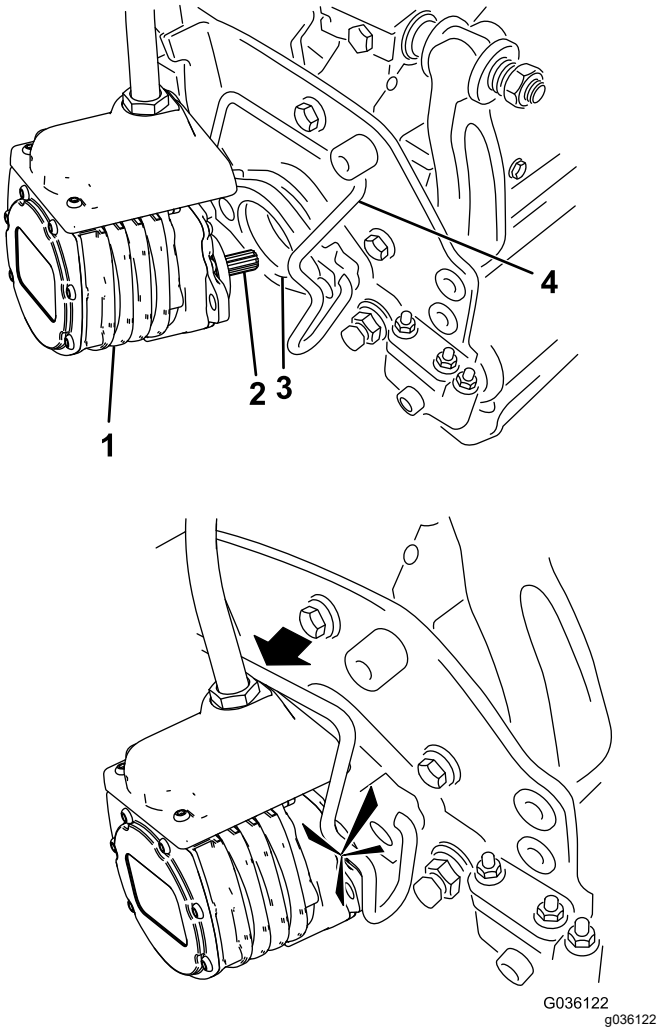

Figure 58

1. Reel motor
2. Spline shaft
3. Cavity
4. Motor-retaining bar

8. Mount a grass basket onto the basket hooks on the suspension arm.
9. Repeat this procedure for the other cutting units.
10. Connect the cutting unit power disconnect couplers; refer to Cutting Unit Power Disconnect Connectors (page 23).

Removing the Cutting Units

1. Disconnect the cutting unit power disconnect couplers; refer to Cutting Unit Power Disconnect Connectors (page 23).

⚠ CAUTION

If you do not disconnect the power to the cutting units, someone could accidentally start the cutting unit, causing serious injury to hands and feet.

Always separate the cutting unit power disconnect couplers before working on the cutting units.

2. Park the machine on a clean level surface, lower the cutting units to the ground until the suspension hydraulics are fully extended, shut off the engine, and engage the parking brake.
3. Push the motor retaining bar out of the slots on the motor toward the cutting unit and remove the motor from the cutting unit.

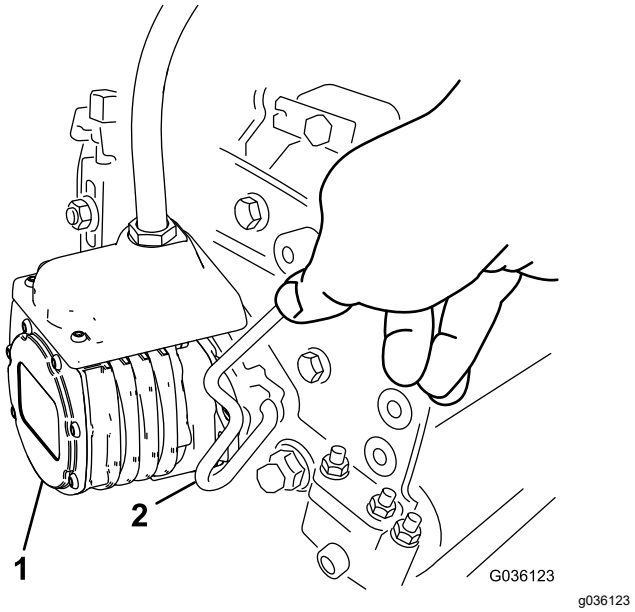

Figure 59

1. Reel motor
2. Motor-retaining bar

4. Move the motor to the storage location on the front of the suspension arm (Figure 60).

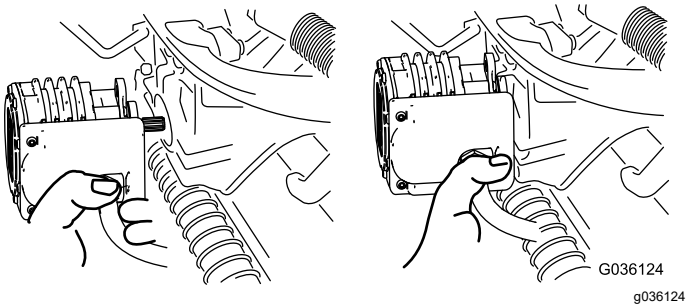

Figure 60

Note: When sharpening, setting the height-of-cut, or performing other maintenance procedures on the cutting units, store the cutting unit reel motors in the storage location on the front of the suspension arms to prevent damage to them.

Important: **Do not raise the suspension to the transport position when the reel motors are in the holders in the machine frame. Damage to the motors or hoses could result. If you must move the traction unit without the cutting units installed, secure them to the suspension arms using cable ties.**

5. Open the latches on the suspension-arm bar of the cutting unit you are removing (Figure 56).
6. Disconnect the latches from the cutting-unit bar.
7. Roll the cutting unit out from under the suspension arm.
8. Repeat steps 3 through 7 for the other cutting units as required.
9. Connect the cutting unit power disconnect couplers; refer to Cutting Unit Power Disconnect Connectors (page 23).

Checking the Reel-to-Bedknife Contact

Each day before operating the machine, check the reel-to-bedknife contact, regardless if the quality of cut had previously been acceptable. There must be light contact across the full length of the reel and bedknife; refer to the Cutting Unit *Operator's Manual*.

Before checking the reels, disconnect the cutting unit power disconnect couplers; refer to Cutting Unit Power Disconnect Connectors (page 23). Connect them when finished.

Backlapping the Reels

⚠ WARNING

Contact with the reels or other moving parts can result in personal injury.

- **Keep your fingers, hands, and clothing away from the reels or other moving parts.**
- **Never attempt to turn the reels by hand or foot while the engine is running.**

1. Park the machine on a level surface, lower the cutting units, shut off the engine, and engage the parking brake.
2. Remove the plastic cover to the left side of the seat.
3. Make initial reel-to-bedknife adjustments appropriate for backlapping on all cutting units that you want to backlap; refer to the cutting unit *Operator's Manual.*
4. Start the engine and run at low idle speed. If the engine stalls, increase the engine speed.
5. On the InfoCenter control, from the SERVICE menu, select BACKLAP.
6. Set BACKLAP to ON.
7. Pull up the Main Menu and scroll down to Settings.
8. In the SETTINGS menu scroll down to BACKLAP RPM and use the ± button to select the desired backlap speed.
9. With the functional control lever in the NEUTRAL position, move the Raise/Lower Mow control forward to start the backlapping operation on the designated reels.
10. Apply lapping compound with a long handle brush. Never use a short handled brush.
11. If the reels stall or become erratic while backlapping, select a higher reel speed setting until the speed stabilizes.
12. To make an adjustment to the cutting units while backlapping, turn the reels off by moving the Raise/Lower Mow control rearward and shut off the engine. After completing adjustments, repeat steps 4 through 10.
13. Repeat the procedure for all cutting units that you want to backlap.
14. When finished, return the InfoCenter BACKLAP setting to OFF or turn the ignition key to the OFF position to return the machine to forward cutting operation.
15. Wash all lapping compound off of the cutting units. Adjust the cutting unit reel to bedknife as needed. Move the cutting-unit reel speed control to the desired mowing position.

Storage

If you wish to store the machine for a long period of time, the perform following steps:

Storage Safety

- Shut off the machine, remove the key, and wait for all movement to stop before you leave the operator's position. Allow the machine to cool before adjusting, servicing, cleaning, or storing it.
- Do not store the machine or fuel container where there is an open flame, spark, or pilot light, such as on a water heater or other appliance.

Preparing the Machine for Storage

1. Always shut off the engine, remove the key (if equipped), wait for all moving parts to stop, and allow the machine to cool before adjusting, cleaning, storing, or repairing the machine.
2. Remove accumulations of dirt and old grass clippings. Sharpen the reels and bedknives, if necessary; refer to the cutting unit *Operator's Manual*. Coat the bedknives and reel blades with a rust preventive. Oil all lubrication points.
3. Raise and support the machine to remove its weight from the tires.
4. Replace the hydraulic fluid and filter. Inspect the hydraulic lines and fittings, and replace damaged or worn parts as needed. Refer to Changing the Hydraulic Fluid and Filter (page 45), Checking the Hydraulic Lines and Hoses (page 45), and Checking the Hydraulic-Fluid Level (page 44).
5. All fuel should be removed from the fuel tank. Run the engine until it shuts off. Replace the fuel filter; refer to Replacing the Fuel Filter (page 37).
6. While the engine is still warm, drain the oil from the crankcase. Refill it with fresh oil; refer to Changing the Engine Oil and Filter (page 36).
7. Remove the spark plugs, pour 30 ml (1 fl oz) of SAE 30 oil into the cylinders, and crank slowly to distribute the oil. Replace the spark plugs; refer to Replacing the Spark Plugs (page 37).
8. Clean dirt and chaff from the cylinder, cylinder head fins, and blower housing.
9. Remove the battery and charge it fully; refer to Charging the Battery (page 39). Either store it on the shelf or on the machine. Leave the cables disconnected if it is stored on the machine. Store the battery in a cool atmosphere to avoid quick deterioration of the charge in the battery.
10. If possible, store the machine in a warm, dry location.

Notes:

Notes:

California Proposition 65 Warning Information

What is this warning?

You may see a product for sale that has a warning label like the following:

WARNING: Cancer and Reproductive Harm—www.p65Warnings.ca.gov.

What is Prop 65?

Prop 65 applies to any company operating in California, selling products in California, or manufacturing products that may be sold in or brought into California. It mandates that the Governor of California maintain and publish a list of chemicals known to cause cancer, birth defects, and/or other reproductive harm. The list, which is updated annually, includes hundreds of chemicals found in many everyday items. The purpose of Prop 65 is to inform the public about exposure to these chemicals.

Prop 65 does not ban the sale of products containing these chemicals but instead requires warnings on any product, product packaging, or literature with the product. Moreover, a Prop 65 warning does not mean that a product is in violation of any product safety standards or requirements. In fact, the California government has clarified that a Prop 65 warning "is not the same as a regulatory decision that a product is 'safe' or 'unsafe.'" Many of these chemicals have been used in everyday products for years without documented harm. For more information, go to https://oag.ca.gov/prop65/faqs-view-all.

A Prop 65 warning means that a company has either (1) evaluated the exposure and has concluded that it exceeds the "no significant risk level"; or (2) has chosen to provide a warning based on its understanding about the presence of a listed chemical without attempting to evaluate the exposure.

Does this law apply everywhere?

Prop 65 warnings are required under California law only. These warnings are seen throughout California in a wide range of settings, including but not limited to restaurants, grocery stores, hotels, schools, and hospitals, and on a wide variety of products. Additionally, some online and mail order retailers provide Prop 65 warnings on their websites or in catalogs.

How do the California warnings compare to federal limits?

Prop 65 standards are often more stringent than federal and international standards. There are various substances that require a Prop 65 warning at levels that are far lower than federal action limits. For example, the Prop 65 standard for warnings for lead is 0.5 µg/day, which is well below the federal and international standards.

Why don't all similar products carry the warning?

- Products sold in California require Prop 65 labelling while similar products sold elsewhere do not.
- A company involved in a Prop 65 lawsuit reaching a settlement may be required to use Prop 65 warnings for its products, but other companies making similar products may have no such requirement.
- The enforcement of Prop 65 is inconsistent.
- Companies may elect not to provide warnings because they conclude that they are not required to do so under Prop 65; a lack of warnings for a product does not mean that the product is free of listed chemicals at similar levels.

Why does Toro include this warning?

Toro has chosen to provide consumers with as much information as possible so that they can make informed decisions about the products they buy and use. Toro provides warnings in certain cases based on its knowledge of the presence of one or more listed chemicals without evaluating the level of exposure, as not all the listed chemicals provide exposure limit requirements. While the exposure from Toro products may be negligible or well within the "no significant risk" range, out of an abundance of caution, Toro has elected to provide the Prop 65 warnings. Moreover, if Toro does not provide these warnings, it could be sued by the State of California or by private parties seeking to enforce Prop 65 and subject to substantial penalties.

The Toro Warranty

Two-Year or 1,500 Hours Limited Warranty

Conditions and Products Covered

The Toro Company warrants your Toro Commercial product ("Product") to be free from defects in materials or workmanship for 2 years or 1,500 operational hours*, whichever occurs first. This warranty is applicable to all products with the exception of Aerators (refer to separate warranty statements for these products). Where a warrantable condition exists, we will repair the Product at no cost to you including diagnostics, labor, parts, and transportation. This warranty begins on the date the Product is delivered to the original retail purchaser.
* Product equipped with an hour meter.

Instructions for Obtaining Warranty Service

You are responsible for notifying the Commercial Products Distributor or Authorized Commercial Products Dealer from whom you purchased the Product as soon as you believe a warrantable condition exists. If you need help locating a Commercial Products Distributor or Authorized Dealer, or if you have questions regarding your warranty rights or responsibilities, you may contact us at:

Toro Commercial Products Service Department
8111 Lyndale Avenue South
Bloomington, MN 55420-1196

952–888–8801 or 800–952–2740
E-mail: commercial.warranty@toro.com

Owner Responsibilities

As the product owner, you are responsible for required maintenance and adjustments stated in your *Operator's Manual*. Repairs for product issues caused by failure to perform required maintenance and adjustments are not covered under this warranty.

Items and Conditions Not Covered

Not all product failures or malfunctions that occur during the warranty period are defects in materials or workmanship. This warranty does not cover the following:

- Product failures which result from the use of non-Toro replacement parts, or from installation and use of add-on, or modified non-Toro branded accessories and products.
- Product failures which result from failure to perform recommended maintenance and/or adjustments.
- Product failures which result from operating the Product in an abusive, negligent, or reckless manner.
- Parts consumed through use that are not defective. Examples of parts which are consumed, or used up, during normal Product operation include, but are not limited to, brake pads and linings, clutch linings, blades, reels, rollers and bearings (sealed or greasable), bed knives, spark plugs, castor wheels and bearings, tires, filters, belts, and certain sprayer components such as diaphragms, nozzles, flow meters, and check valves.
- Failures caused by outside influence, including, but not limited to, weather, storage practices, contamination, use of unapproved fuels, coolants, lubricants, additives, fertilizers, water, or chemicals.
- Failure or performance issues due to the use of fuels (e.g. gasoline, diesel, or biodiesel) that do not conform to their respective industry standards.
- Normal noise, vibration, wear and tear, and deterioration. Normal "wear and tear" includes, but is not limited to, damage to seats due to wear or abrasion, worn painted surfaces, scratched decals or windows.

Parts

Parts scheduled for replacement as required maintenance are warranted for the period of time up to the scheduled replacement time for that part. Parts replaced under this warranty are covered for the duration of the original product warranty and become the property of Toro. Toro will make the final decision whether to repair any existing part or assembly or replace it. Toro may use remanufactured parts for warranty repairs.

Deep Cycle and Lithium-Ion Battery Warranty

Deep cycle and Lithium-Ion batteries have a specified total number of kilowatt-hours they can deliver during their lifetime. Operating, recharging, and maintenance techniques can extend or reduce total battery life. As the batteries in this product are consumed, the amount of useful work between charging intervals will slowly decrease until the battery is completely worn out. Replacement of worn out batteries, due to normal consumption, is the responsibility of the product owner. Note: (Lithium-Ion battery only): Refer to the battery warranty for additional information.

Lifetime Crankshaft Warranty (ProStripe 02657 Model Only)

The Prostripe which is fitted with a genuine Toro Friction Disc and Crank-Safe Blade Brake Clutch (integrated Blade Brake Clutch (BBC) + Friction Disc assembly) as original equipment and used by the original purchaser in accordance with recommended operating and maintenance procedures, are covered by a Lifetime Warranty against engine crankshaft bending. Machines fitted with friction washers, Blade Brake Clutch (BBC) units and other such devices are not covered by the Lifetime Crankshaft Warranty.

Maintenance is at Owner's Expense

Engine tune-up, lubrication, cleaning and polishing, replacement of filters, coolant, and completing recommended maintenance are some of the normal services Toro products require that are at the owner's expense.

General Conditions

Repair by an Authorized Toro Distributor or Dealer is your sole remedy under this warranty.

The Toro Company is not liable for indirect, incidental or consequential damages in connection with the use of the Toro Products covered by this warranty, including any cost or expense of providing substitute equipment or service during reasonable periods of malfunction or non-use pending completion of repairs under this warranty. Except for the Emissions warranty referenced below, if applicable, there is no other express warranty. All implied warranties of merchantability and fitness for use are limited to the duration of this express warranty.

Some states do not allow exclusions of incidental or consequential damages, or limitations on how long an implied warranty lasts, so the above exclusions and limitations may not apply to you. This warranty gives you specific legal rights, and you may also have other rights which vary from state to state.

Note Regarding Emissions Warranty

The Emissions Control System on your Product may be covered by a separate warranty meeting requirements established by the U.S. Environmental Protection Agency (EPA) and/or the California Air Resources Board (CARB). The hour limitations set forth above do not apply to the Emissions Control System Warranty. Refer to the Engine Emission Control Warranty Statement supplied with your product or contained in the engine manufacturer's documentation.

Countries Other than the United States or Canada

Customers who have purchased Toro products exported from the United States or Canada should contact their Toro Distributor (Dealer) to obtain guarantee policies for your country, province, or state. If for any reason you are dissatisfied with your Distributor's service or have difficulty obtaining guarantee information, contact your Authorized Toro Service Center.