Form No. 3453-480 Rev B

TORO®

Count on it.

Parts Catalog

Beige Canopy

Vista™ 8 Passenger Shuttle Vehicle

Model No. 08223

Register at www.Toro.com.
Original Instructions (EN)

CE

3453-480 B

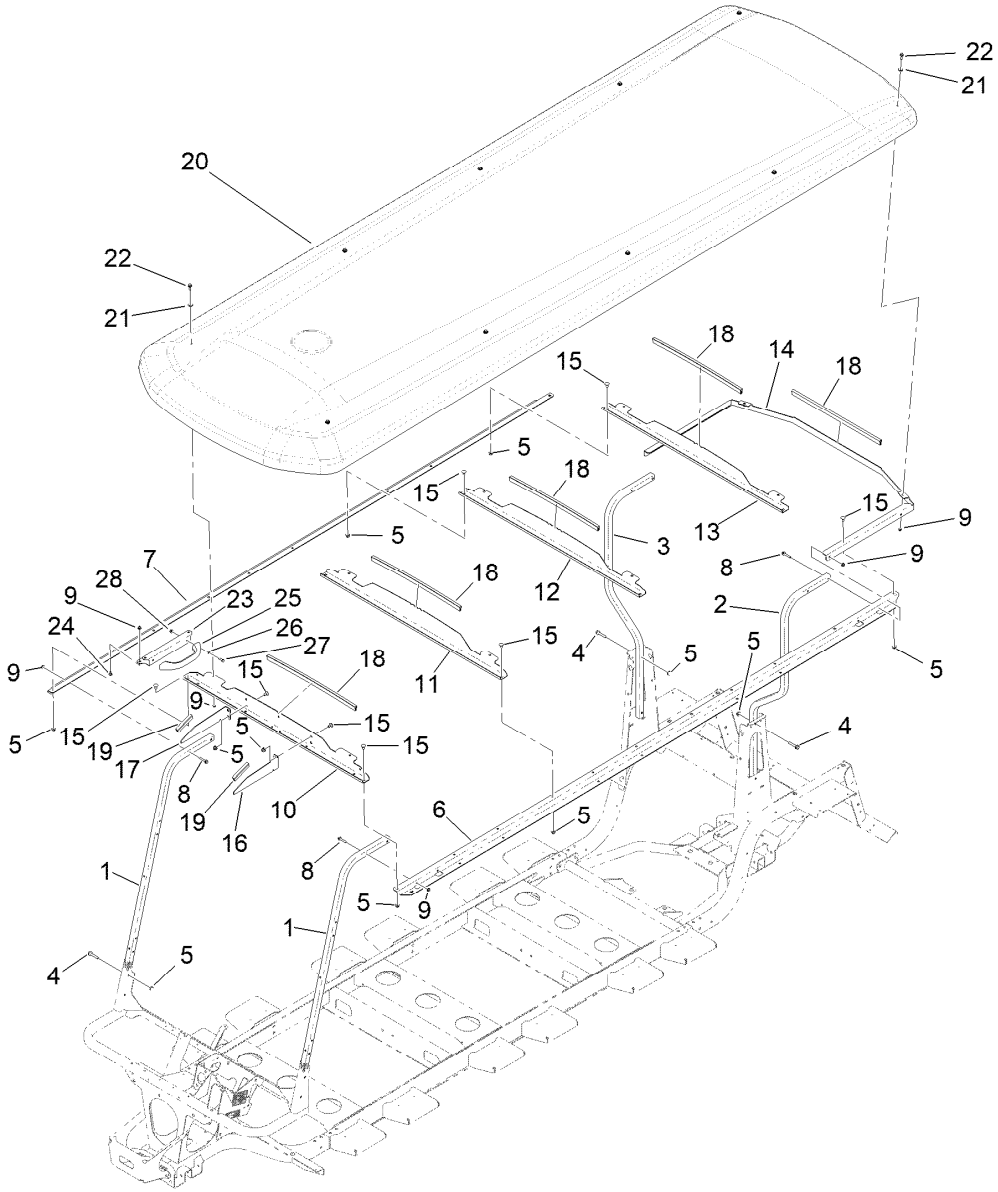

8 Passenger Canopy Assembly

Ref.	Part Number	Qty.	Description
1	140-0852-05	2	Tube-Frame, Front, Canopy
2	140-0853-05	1	Tube-Frame, LH Rear, Canopy
3	140-0854-05	1	Tube-Frame, RH Rear, Canopy
4	145-7105	8	Screw-HHF
5	104-8300	22	Nut-HF, NI
6	144-5512-05	1	Support, 8 Pass Canopy
7	144-5513-05	1	Support-RH, 8 Pass Canopy
8	94-5781	8	Screw-HHF
9	104-7201	22	Nut-HF, NI
10	144-5514-05	1	Bracket-Support, Front
11	144-5524-05	1	Bracket-Support, Middle (8Pass)
12	144-5525-05	1	Bracket-Support, Middle
13	144-5516-05	1	Bracket-Support, Rear
14	144-5528-05	1	Bracket-Support, Rear (Canopy)

Ref.	Part Number	Qty.	Description
15	3230-15	14	Screw-CARR
16	145-7111-05	1	Bracket-Support, LH
17	145-7112-05	1	Bracket-Support, RH
18	144-5561	5	Trim-Seal, Bulb
19	145-7118	2	Trim-Seal, Bulb
20	145-7260	1	Canopy-8 Passenger (Beige)
21	119-0872	10	Washer-Sealing, Bonded
22	120-9678	10	Screw-HHF
23	145-7119-05	1	Bracket-Handle, Grab
24	3229-10	4	Screw-CARR
25	145-7120	1	Handle-Grab
26	33093-00	2	Washer-Flat
27	33113-020	2	Screw-HH
28	81-0130	2	Nut-Flange, NI

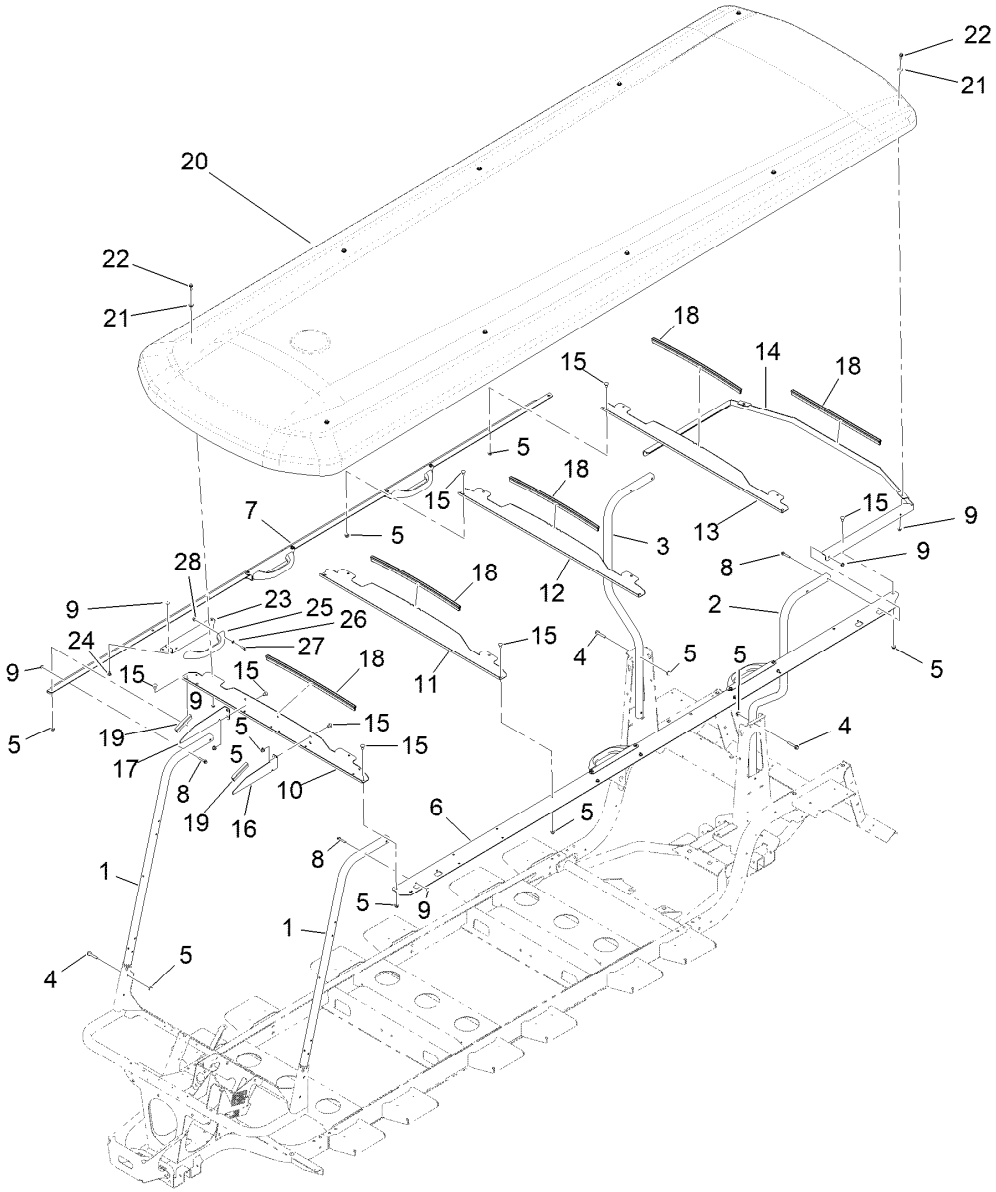

8 Passenger Canopy Assembly

Ref.	Part Number	Qty.	Description
1	140-0852-05	2	Tube-Frame, Front, Canopy
2	140-0853-05	1	Tube-Frame, LH Rear, Canopy
3	140-0854-05	1	Tube-Frame, RH Rear, Canopy
4	145-7105	8	Screw-HHF
5	104-8300	22	Nut-HF, NI
6	144-5512-05	1	Support, 8 Pass Canopy
7	144-5513-05	1	Support-RH, 8 Pass Canopy
8	94-5781	8	Screw-HHF
9	104-7201	38	Nut-HF, NI
10	144-5514-05	1	Bracket-Support, Front
11	144-5524-05	1	Bracket-Support, Middle (8Pass)
12	144-5525-05	1	Bracket-Support, Middle
13	144-5516-05	1	Bracket-Support, Rear
14	144-5528-05	1	Bracket-Support, Rear (Canopy)
15	3230-15	14	Screw-CARR
16	145-7111-05	1	Bracket-Support, LH
17	145-7112-05	1	Bracket-Support, RH
18	144-5561	5	Trim-Seal, Bulb
19	145-7118	2	Trim-Seal, Bulb
20	145-7260	1	Canopy-8 Passenger (Beige)
21	119-0872	10	Washer-Sealing, Bonded
22	120-9678	10	Screw-HHF
23	145-7119-05	5	Bracket-Handle, Grab
24	3229-10	20	Screw-CARR
25	145-7120	5	Handle-Grab
26	33093-00	10	Washer-Flat
27	33113-020	10	Screw-HH
28	81-0130	10	Nut-Flange, NI