Form No. 3376-749 Rev B

TORO®

Count on it.

Parts Catalog

# TX 427

## Compact Utility Loader

**Model No. 22321—Serial No. 313000001 and Up**

**Model No. 22321G—Serial No. 313000001 and Up**

Register at www.Toro.com.
Original Instructions (EN)

CE

*3376-749* B

# Ordering Replacement Parts

To order replacement parts, please supply the part number, the quantity, and the description of each part desired.

### Understanding Reference Numbers

Each identified part in an illustration has a reference number. The reference number for a part also appears in the parts list, along with other information about the part.

This catalog uses two special reference number formats, one to indicate parts in a service assembly and another to indicate the quantity of a given part in an illustration.

### Service Assembly Reference Numbers

Parts in service assemblies have reference numbers in the form a:b. The a represents the reference number of the entire service assembly and the b represents a sequential number unique to each part within the service assembly.

For example, a wheel assembly might be identified by reference number 6, the tire by 6:1, the valve by 6:2, and the wheel by 6:3. When you order the assembly identified by reference number 6, you receive all parts identified by reference numbers 6:1,6:2, and 6:3. However, you may also order any part individually. Reference numbers of this type appear in illustration and in parts lists.

### Reference Numbers Indicating Quantity

In an illustration, if a reference number indicates more than one part, the reference number has the form nX y. The n represents the quantity of the part, the X is the multiplication symbol, and the y represents the reference number.

For example, in an illustration, the reference number 2X 37 means that two of the parts identified by reference number 37 are indicated.

# Contents

Main Frame and Fuel Tank Assembly . . . . . 4
Track and Traction Assembly . . . . . 6
Parking Brake Assembly . . . . . 7
Loader Tower and Pulley Assembly . . . . . 8
Traction Hydraulic Assembly . . . . . 9
Hydraulic Pump Assembly No. 106-5705 and 106-5706 . . . . . 11
Hydraulic Motor Assembly No. 106-7654 . . . . . 12
Engine Assembly . . . . . 13
Air Cleaner Assembly No. 117-9989 . . . . . 15
Hydraulic Pump and Filter Assembly . . . . . 16
Hydraulic Gear Pump Assembly No. 106-7650 . . . . . 17
Control Panel Assembly . . . . . 18
Traction Control Assembly . . . . . 20
Principal Hydraulic Assembly . . . . . 21
Two Spool Valve Assembly No. 106-9307 . . . . . 23
One Spool Valve Assembly No. 104-2831 . . . . . 24
Loader Arm Assembly . . . . . 25
Loader Arm Hydraulic Assembly . . . . . 26
Left Hand Hydraulic Lift Cylinder Assembly No. 104-6267 . . . . . 27
Right Hand Hydraulic Lift Cylinder Assembly No. 104-6269 . . . . . 28
Hydraulic Cylinder Assembly No. 105-8370 . . . . . 29
Quick Attach Assembly . . . . . 30
Electrical System Assembly . . . . . 31
Grill Assembly . . . . . 32
Hydraulic Oil Cooler Assembly . . . . . 33
Hood Assembly . . . . . 34
Rear Access Cover Assembly . . . . . 35
Attachments and Accessories . . . . . 36

**© 2023—The Toro® Company**
**8111 Lyndale Avenue South**
**Bloomington, MN 55420**



**Contact us at www.Toro.com.**
**Printed in the USA.**
**All Rights Reserved**

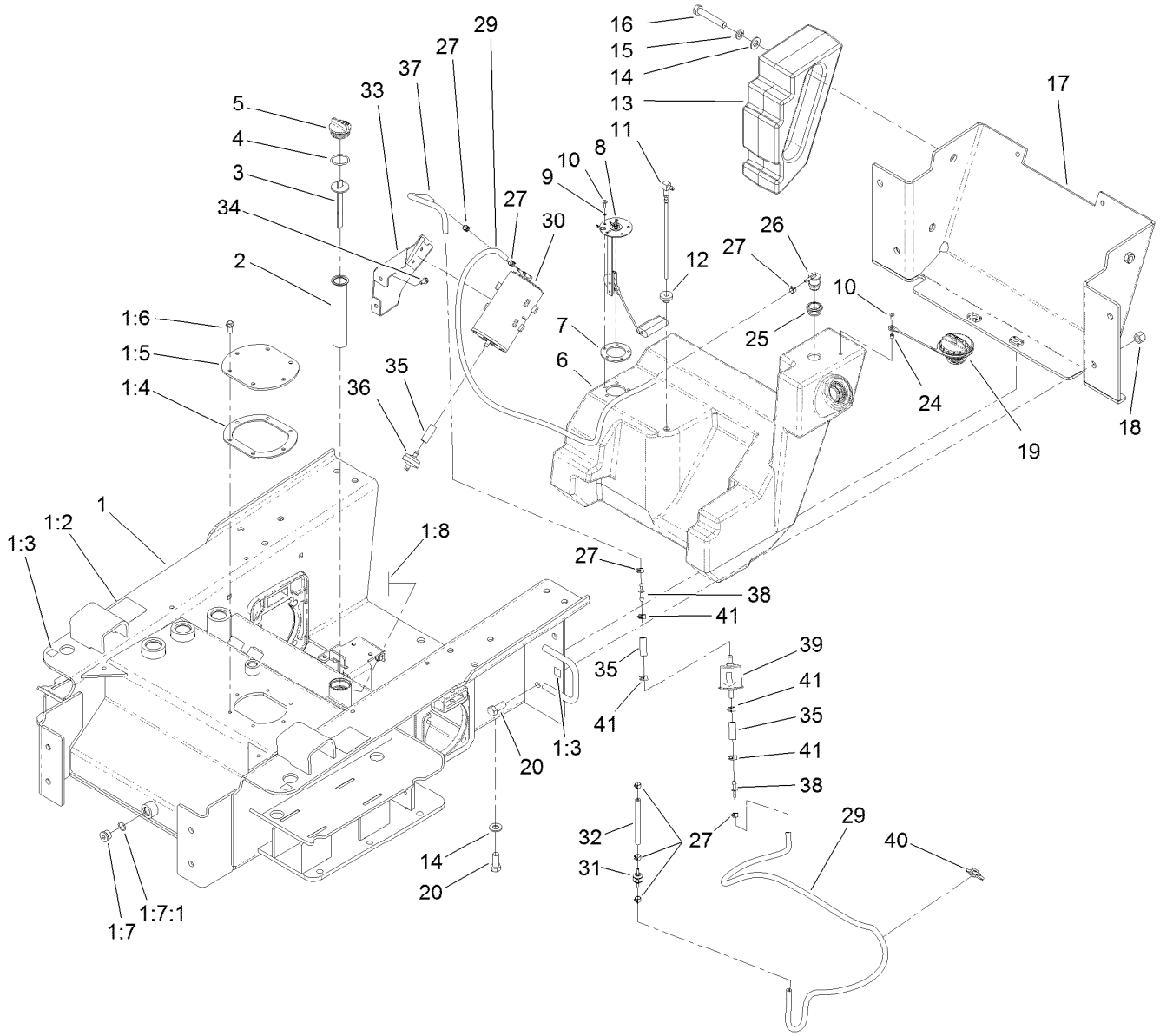


# Main Frame and Fuel Tank Assembly

| Ref. | Part Number | Qty. | Description |
|---|---|---|---|
| 1 | 114-1354 | 1 | Chassis ASM |
| 1:2 | 100-4650 | 2 | Decal-Warning |
| 1:3 | 93-9084 | 4 | Decal-Point, Lift |
| 1:4 | 107-3557 | 1 | Gasket-Cover, Access |
| 1:5 | 108-6297-01 | 1 | Cover-Tank |
| 1:6 | 98-9940 | 6 | Screw-HHF |
| 1:7 | 353-988 | 2 | Plug-Hex |
| 1:7:1 | 237-79 | 1 | O-Ring |
| 1:8 | 93-6686 | 1 | Decal-Oil, HYD |
| 2 | 61-2790 | 1 | Filter-Screen |
| 3 | 100-2097 | 1 | Dipstick-Oil |
| 4 | 237-123 | 1 | O-Ring |
| 5 | 93-7498 | 1 | Plug-Plastic |
| 6 | 117-9956 | 1 | Tank-Fuel |
| 7 | 113372 | 1 | Gasket-Sender, Fuel |
| 8 | 100-1298 | 1 | Sender-Fuel |
| 9 | 3253-17 | 5 | Washer-Lock |
| 10 | 3250-31 | 6 | Screw-PPH |
| 11 | 98-0185 | 1 | Pipe-Stand |
| 12 | 46-6560 | 1 | Bushing |
| 13 | 99-6165-01 | 2 | Counterweight-Rear |

| Ref. | Part Number | Qty. | Description |
|---|---|---|---|
| 14 | 3256-26 | 6 | Washer-Flat |
| 15 | 3253-7 | 4 | Washer-Lock |
| 16 | 325-12 | 4 | Screw-HH |
| 17 | 115-4565-01 | 1 | Cover-Rear |
| 18 | 3296-23 | 4 | Nut-Lock, NI |
| 19 | 117-1722 | 1 | Cap-Fuel |
| 20 | 325-5 | 6 | Screw-HH |
| 24 | 117-9965 | 1 | Spacer |
| 25 | 114-0284 | 1 | Grommet |
| 26 | 114-0285 | 1 | Valve-Rollover |
| 27 | 2412-146 | 8 | Clamp-Hose |
| 29 | 119-3517 | 2 | Hose-Fuel |
| 30 | 115-2251 | 1 | Canister-Carbon |
| 31 | 115-7868 | 1 | Valve-Check, Vacuum |
| 32 | 115-4736 | 1 | Hose-Fuel |
| 33 | 117-4043 | 1 | Holder-Canister |
| 34 | 9266714 | 2 | Screw-HWH |
| 35 | 106-5317 | 3 | Hose-Fuel |
| 36 | 115-7854 | 1 | Filter-Fuel, Inline |
| 37 | 51-3217 | 1 | Hose-Fuel |
| 38 | 106-8150 | 2 | Fitting-Straight |

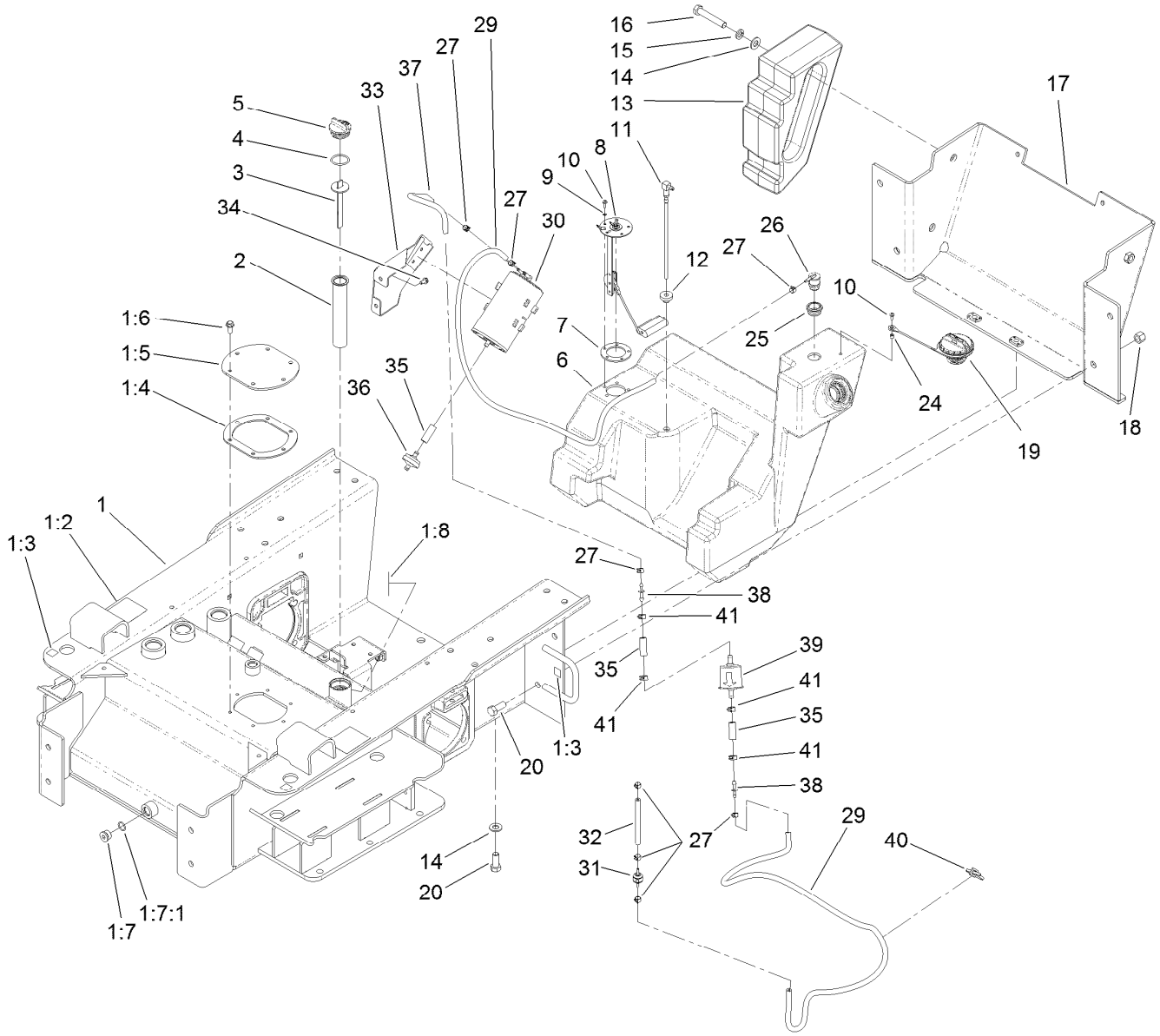


# Main Frame and Fuel Tank Assembly (continued)

| Ref. | Part Number | Qty. | Description |
|---|---|---|---|
| 39 | 120-2235 | 1 | Filter-Fuel |
| 40 | 3290-378 | 1 | Tie-Cable |
| 41 | 92-2379 | 4 | Clamp-Hose |

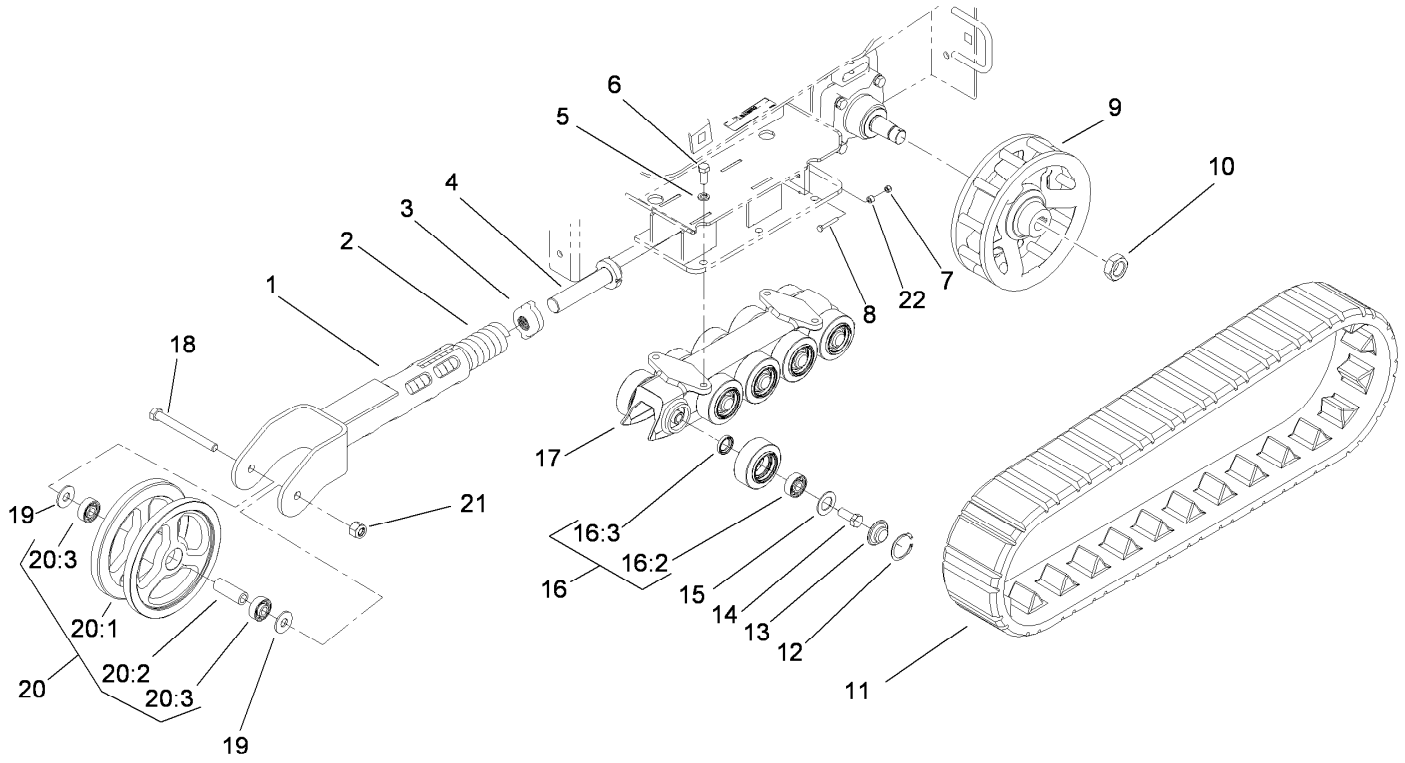


# Track and Traction Assembly

| Ref. | Part Number | Qty. | Description |
|---|---|---|---|
| 1 | 108-4691-03 | 2 | Arm-Tensioner |
| 2 | 95-3624 | 2 | Spring-Compression |
| 3 | 108-4664 | 2 | Block-Tensioner |
| 4 | 98-9846 | 2 | Bolt-Tensioner |
| 5 | 3253-7 | 8 | Washer-Lock |
| 6 | 325-5 | 8 | Screw-HH |
| 7 | 32128-32 | 2 | Nut-HHF |
| 8 | 321-37 | 2 | Screw-HH |
| 9 | 108-5643-03 | 2 | Wheel-Drive |
| 10 | 107-9319 | 2 | Nut-Hex |
| 11 | 98-9800 | 2 | Track |
| 12 | 106-7595 | 20 | Ring-Snap, Internal |
| 13 | 106-7557 | 20 | Cap-Wheel, Bearing |
| 14 | 327-4 | 20 | Screw-HH |
| 15 | 106-7585 | 20 | Gasket-Bogie |
| 16 | 106-7621 | 20 | Road Wheel ASM |
| 16:2 | 120-5378 | 1 | Bearing-Ball |
| 16:3 | 253-118 | 1 | Seal-Oil |
| 17 | 117-1310-03 | 2 | Guide-Track |
| 18 | 327-17 | 2 | Screw-HH |
| 19 | 3256-7 | 4 | Washer-Flat |
| 20 | 104-5745 | 2 | Tensioner Wheel ASM |
| 20:1 | 104-5747-03 | 1 | Wheel-Tensioner |
| 20:2 | 98-9835 | 1 | Spacer-Wheel, Tensioner |
| 20:3 | 120-5378 | 2 | Bearing-Ball |
| 21 | 3296-24 | 2 | Nut-Hex |
| 22 | 98-4799 | 2 | Spacer |

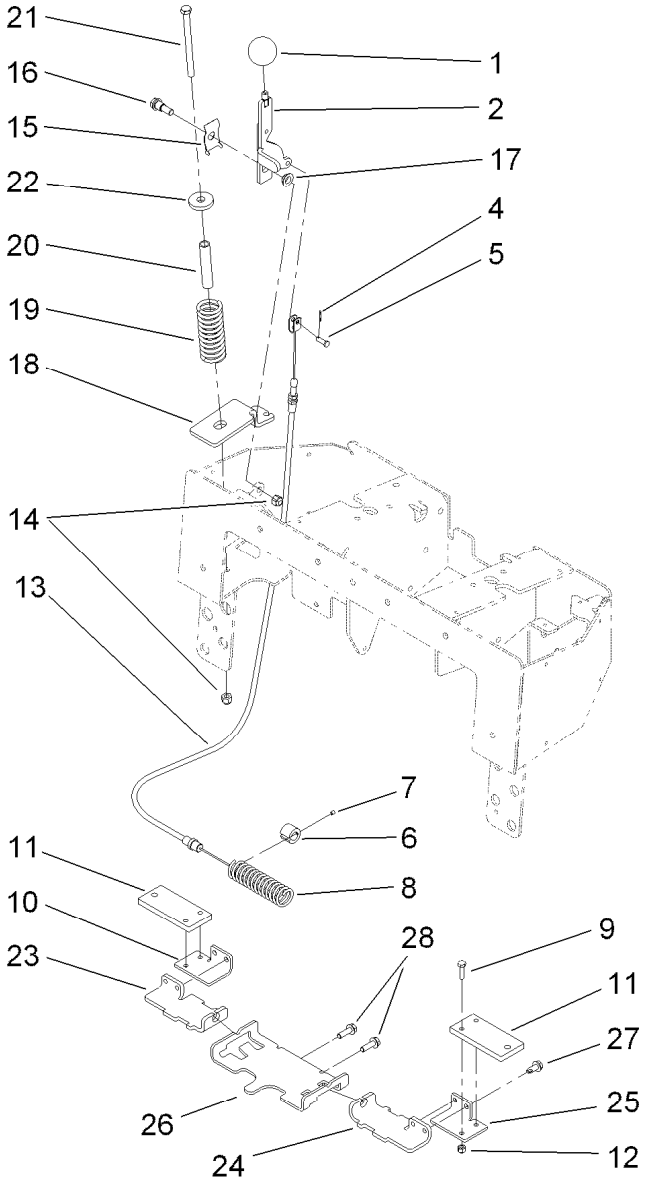


# Parking Brake Assembly

| Ref. | Part Number | Qty. | Description |
|---|---|---|---|
| 1 | 233-21 | 1 | Knob |
| 2 | 112-2694-03 | 1 | Handle-Brake |
| 4 | 3272-1 | 1 | Pin-Cotter |
| 5 | 283-67 | 1 | Pin-Clevis |
| 6 | 100-6274 | 2 | Tube-Guide |
| 7 | 3245-20 | 2 | Screw-Set |
| 8 | 100-1678 | 1 | Spring |
| 9 | 321-6 | 4 | Screw-HH |
| 10 | 112-2789-03 | 1 | Bar-Link, Brake RH |
| 11 | 112-2735-03 | 2 | Plate-Brake |
| 12 | 3296-42 | 4 | Nut-Lock, NI |
| 13 | 112-2791 | 1 | Cable-Brake |
| 14 | 3296-39 | 2 | Nut-Lock, NI |
| 15 | 112-2695 | 1 | Spring-Leaf |

| Ref. | Part Number | Qty. | Description |
|---|---|---|---|
| 16 | 94-6177 | 1 | Bolt-Shoulder |
| 17 | 93-2368 | 1 | Bushing-Flange |
| 18 | 115-4854-03 | 1 | Bracket-Cable, Spring |
| 19 | 114-1254 | 1 | Spring-Compression |
| 20 | 114-1255 | 1 | Spacer-Spring |
| 21 | 323-39 | 1 | Screw-HH |
| 22 | 98-0691 | 1 | Washer-Hardened |
| 23 | 112-2788-03 | 1 | Bracket-Mounting, Brake RH |
| 24 | 112-2733-03 | 1 | Bracket-Mounting, Brake LH |
| 25 | 112-2734-03 | 1 | Bar-Link, Brake LH |
| 26 | 110-0224-03 | 1 | Support-Bar, Brake |
| 27 | 32104-32 | 4 | Screw-HWH |
| 28 | 3234-11 | 2 | Screw-HHF |

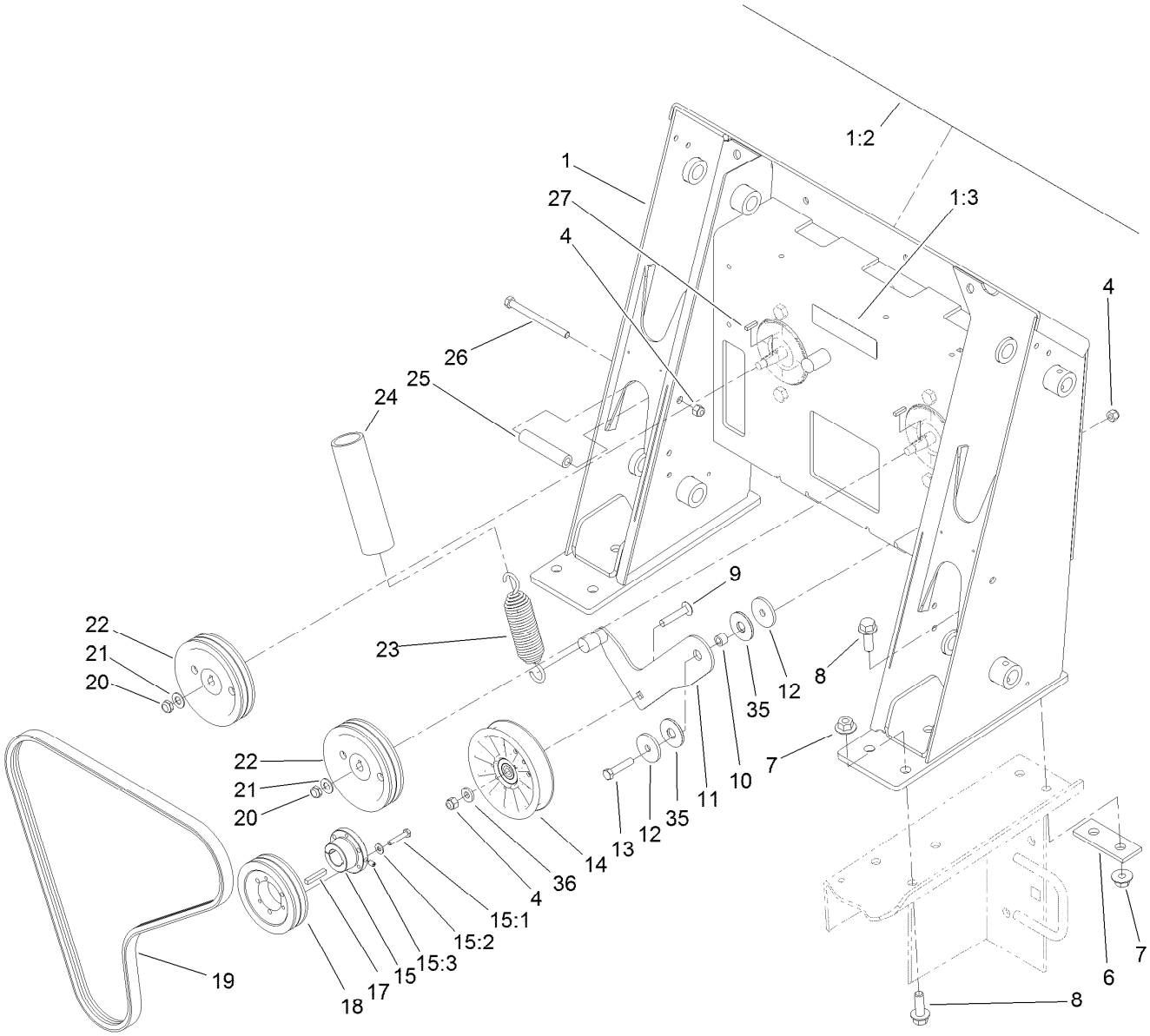


# Loader Tower and Pulley Assembly

| Ref. | Part Number | Qty. | Description |
|---|---|---|---|
| 1 | 117-9982 | 1 | Loader Tower ASM |
| 1:2 | 117-4045 | 1 | Decal-Panel, Control |
| 1:3 | 93-7814 | 1 | Decal-Danger |
| 4 | 104-8301 | 4 | Nut-HF, NI |
| 6 | 100-6123-01 | 2 | Plate-Stiffener |
| 7 | 32128-52 | 10 | Nut-Lock, Flange |
| 8 | 100-6116 | 10 | Screw-HHF |
| 9 | 117-9971 | 1 | Bolt-Carriage |
| 10 | 115-4986 | 1 | Spacer |
| 11 | 115-1486 | 1 | Arm-Idler |
| 12 | 115-1485 | 2 | Washer-Plain |
| 13 | 323-9 | 1 | Screw-HH |
| 14 | 119-2358 | 1 | Pulley-Idler |
| 15 | 61-3340 | 1 | Bushing |
| 15:1 | 321-13 | 3 | Screw-HH |
| 15:2 | 3253-2 | 3 | Washer-Lock |
| 15:3 | 3245-2 | 1 | Screw-Set, HSH |
| 17 | 67-7490 | 1 | Key-Square |
| 18 | 61-3330 | 1 | Pulley |
| 19 | 95-3611 | 1 | V-Belt |
| 20 | 3296-38 | 2 | Nut-Lock, NI |
| 21 | 3256-25 | 2 | Washer-Flat |
| 22 | 106-5710 | 2 | Pulley-3V |
| 23 | 105-0383 | 1 | Spring-Extension |
| 24 | 112-2409 | 1 | Retainer-Spring |
| 25 | 100-1271 | 2 | Tube-Spacer |
| 26 | 323-23 | 2 | Screw-HH |
| 27 | 3-6168 | 2 | Key |
| 35 | 114-0463 | 2 | Washer-Friction, Composite |
| 36 | 43-0940 | 1 | Spacer |

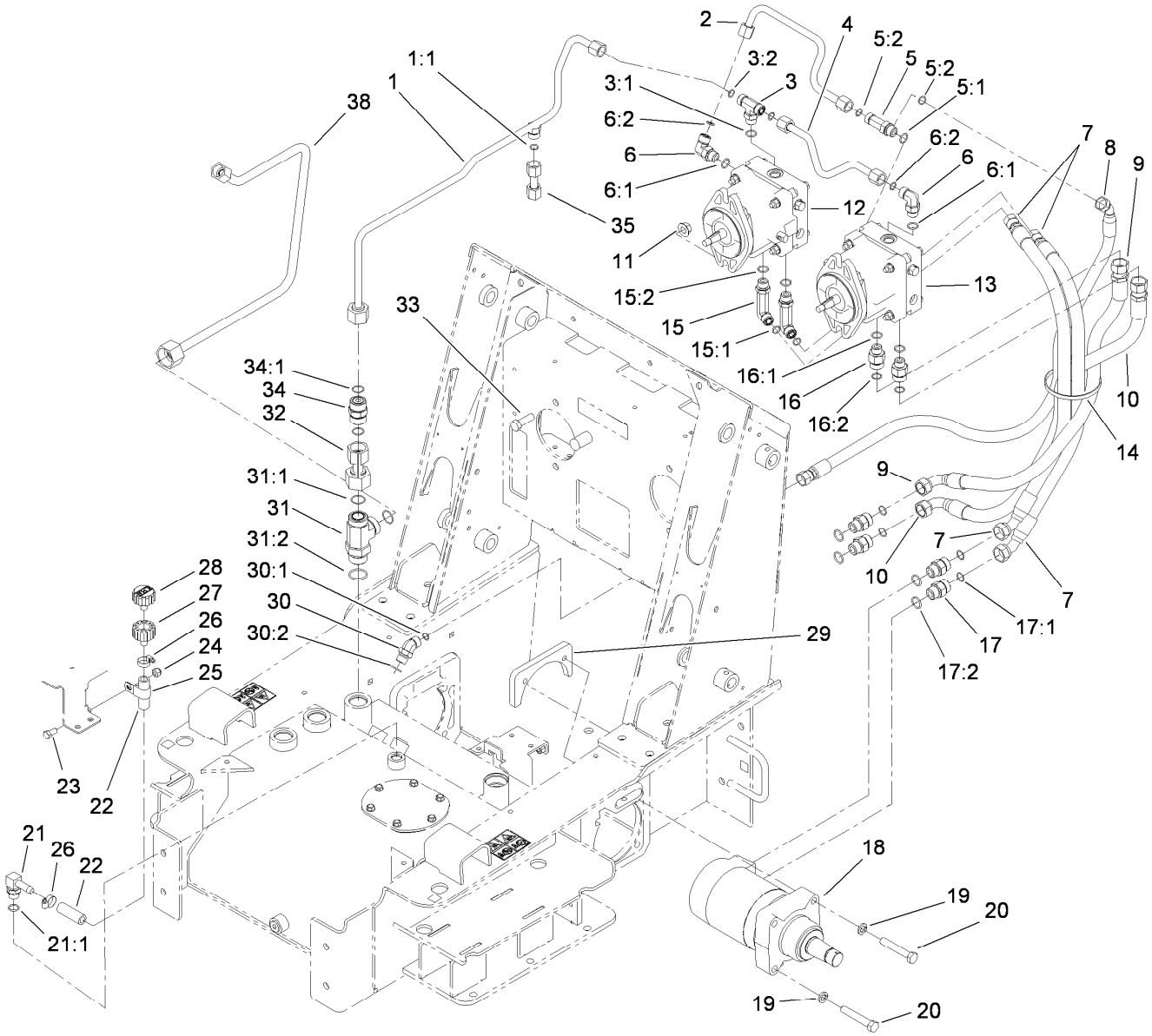


# Traction Hydraulic Assembly

| Ref. | Part Number | Qty. | Description |
|---|---|---|---|
| 1 | 108-4665 | 1 | HYD Tube ASM |
| 1:1 | 237-30 | 1 | O-Ring |
| 2 | 98-0200 | 1 | Tube-HYD |
| 3 | 340-157 | 1 | Fitting-HYD, Tee |
| 3:1 | 237-79 | 1 | O-Ring |
| 3:2 | 237-30 | 2 | O-Ring |
| 4 | 106-9330 | 1 | Tube-HYD |
| 5 | 340-109 | 1 | Fitting-Tee |
| 5:1 | 237-79 | 1 | O-Ring |
| 5:2 | 237-30 | 2 | O-Ring |
| 6 | 340-98 | 2 | Fitting-Elbow, 90 DEG |
| 6:1 | 237-79 | 1 | O-Ring |
| 6:2 | 237-30 | 1 | O-Ring |
| 7 | 98-0233 | 2 | Hose-HYD |
| 8 | 98-0201 | 1 | Hose-HYD |
| 9 | 115-4826 | 1 | Hose-HYD |
| 10 | 115-4829 | 1 | Hose-HYD |
| 11 | 32128-52 | 4 | Nut-Lock, Flange |
| 12 | 106-5706 | 1 | RH HYD Pump ASM |
| 13 | 106-5705 | 1 | LH HYD Pump ASM |
| 14 | 3334-945 | 1 | Tie-Cable |

| Ref. | Part Number | Qty. | Description |
|---|---|---|---|
| 15 | 99-6160 | 2 | Fitting-Elbow, 90 Long |
| 15:1 | 237-30 | 1 | O-Ring |
| 15:2 | 237-79 | 1 | O-Ring |
| 16 | 340-155 | 2 | Fitting-Straight |
| 16:1 | 237-79 | 1 | O-Ring |
| 16:2 | 237-151 | 1 | O-Ring |
| 17 | 340-7 | 4 | Fitting-Straight |
| 17:1 | 237-65 | 1 | O-Ring |
| 17:2 | 237-80 | 1 | O-Ring |
| 18 | 106-7654 | 2 | HYD Motor ASM |
| 19 | 3253-7 | 8 | Washer-Lock |
| 20 | 115-4845 | 8 | Screw-HH, TAP |
| 21 | 354-120 | 1 | Fitting-Elbow, 90 |
| 21:1 | 237-79 | 1 | O-Ring |
| 22 | 98-4667 | 1 | Hose |
| 23 | 3234-42 | 1 | Screw-HHF |
| 24 | 3296-39 | 1 | Nut-Lock, NI |
| 25 | 2412-4 | 1 | Clamp-R |
| 26 | 2412-36 | 2 | Clamp-Hose |
| 27 | 92-8020 | 1 | Adapter-Breather |
| 28 | 68-6150 | 1 | Breather |

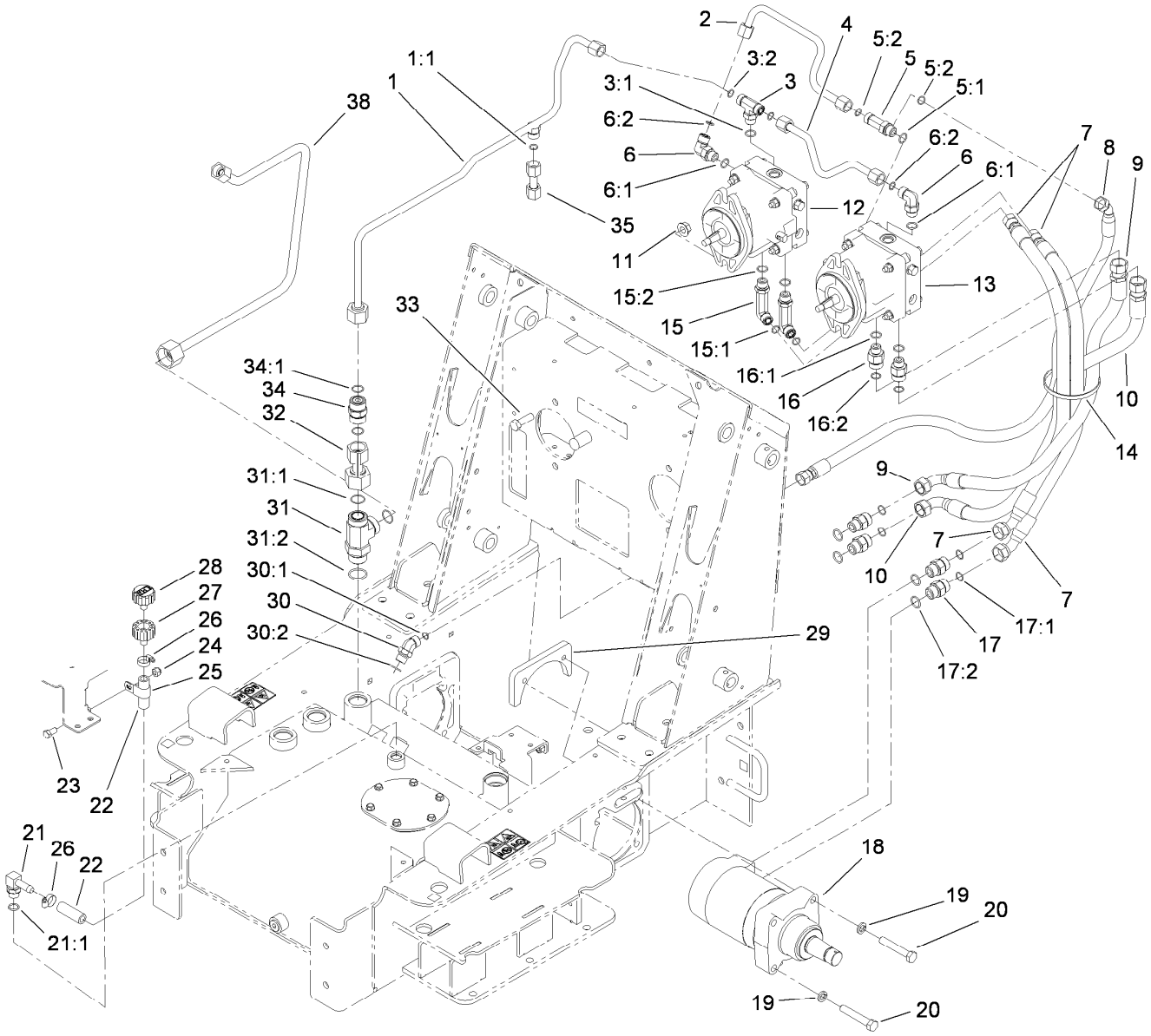


# Traction Hydraulic Assembly (continued)

| Ref. | Part Number | Qty. | Description |
|---|---|---|---|
| 29 | 98-2763-03 | 2 | Plate-Mounting |
| 30 | 340-101 | 1 | Fitting-HYD, 45 DEG |
| 30:1 | 237-30 | 1 | O-Ring |
| 30:2 | 237-79 | 1 | O-Ring |
| 31 | 104-3795 | 1 | Fitting-Tee |
| 31:1 | 340-65 | 2 | O-Ring |
| 31:2 | 237-146 | 1 | O-Ring |

| Ref. | Part Number | Qty. | Description |
|---|---|---|---|
| 32 | 105-0226 | 1 | Tube-HYD |
| 33 | 325-6 | 4 | Screw-HH |
| 34 | 99-6161 | 1 | HYD Check Valve ASM |
| 34:1 | 237-58 | 2 | O-Ring |
| 35 | 108-4666 | 1 | Tube-HYD |
| 38 | 117-3988 | 1 | Tube-HYD |

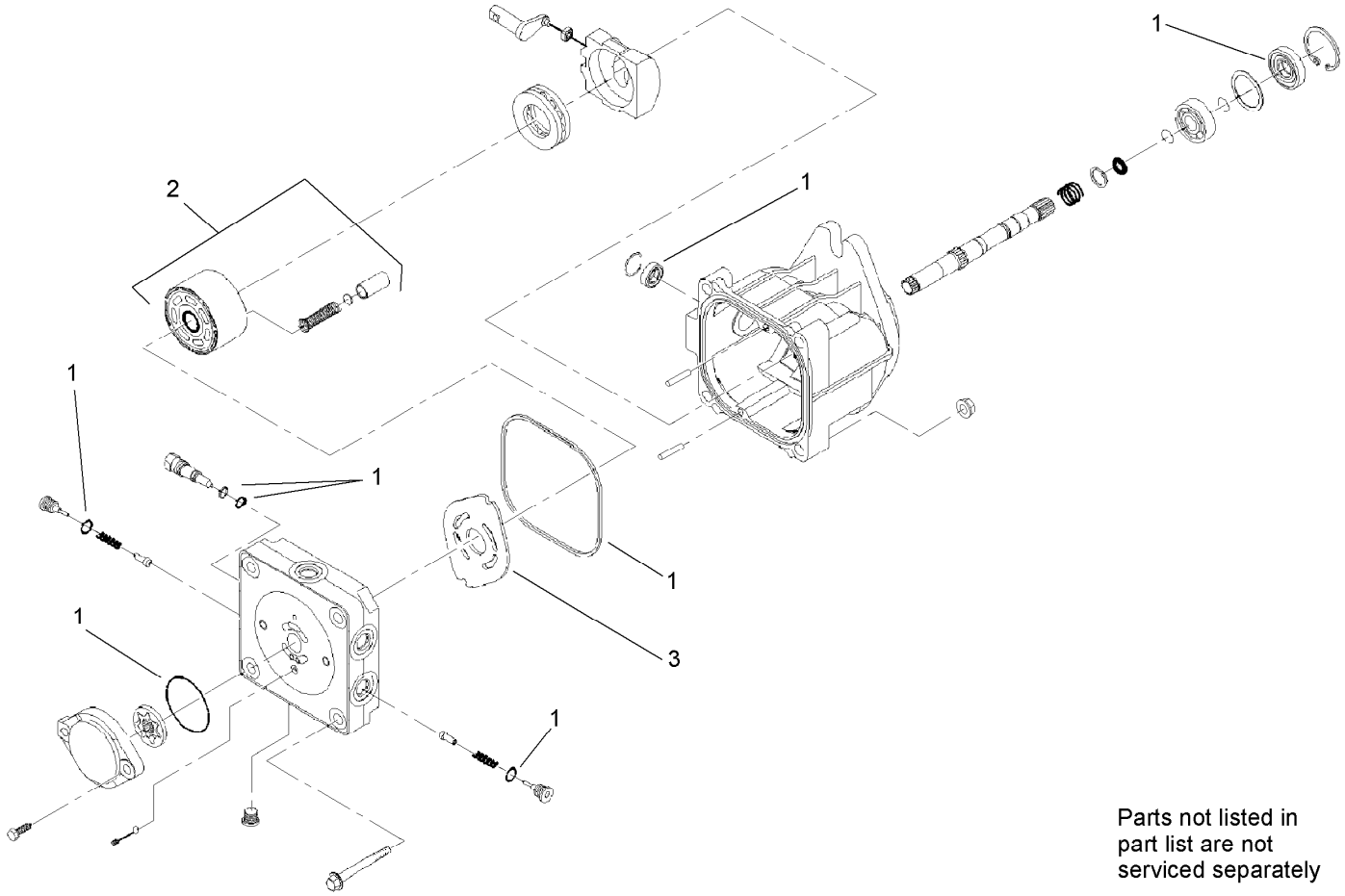


Parts not listed in part list are not serviced separately

# Hydraulic Pump Assembly No. 106-5705 and 106-5706

| *Ref.* | *Part Number* | *Qty.* | *Description* |
|---|---|---|---|
| 1 | 100-6110 | 1 | Overhaul Seal Kit |
| 2 | 94-1913 | 1 | Cylinder Block ASM |
| 3 | 100-6112 | 1 | Plate-Valve |

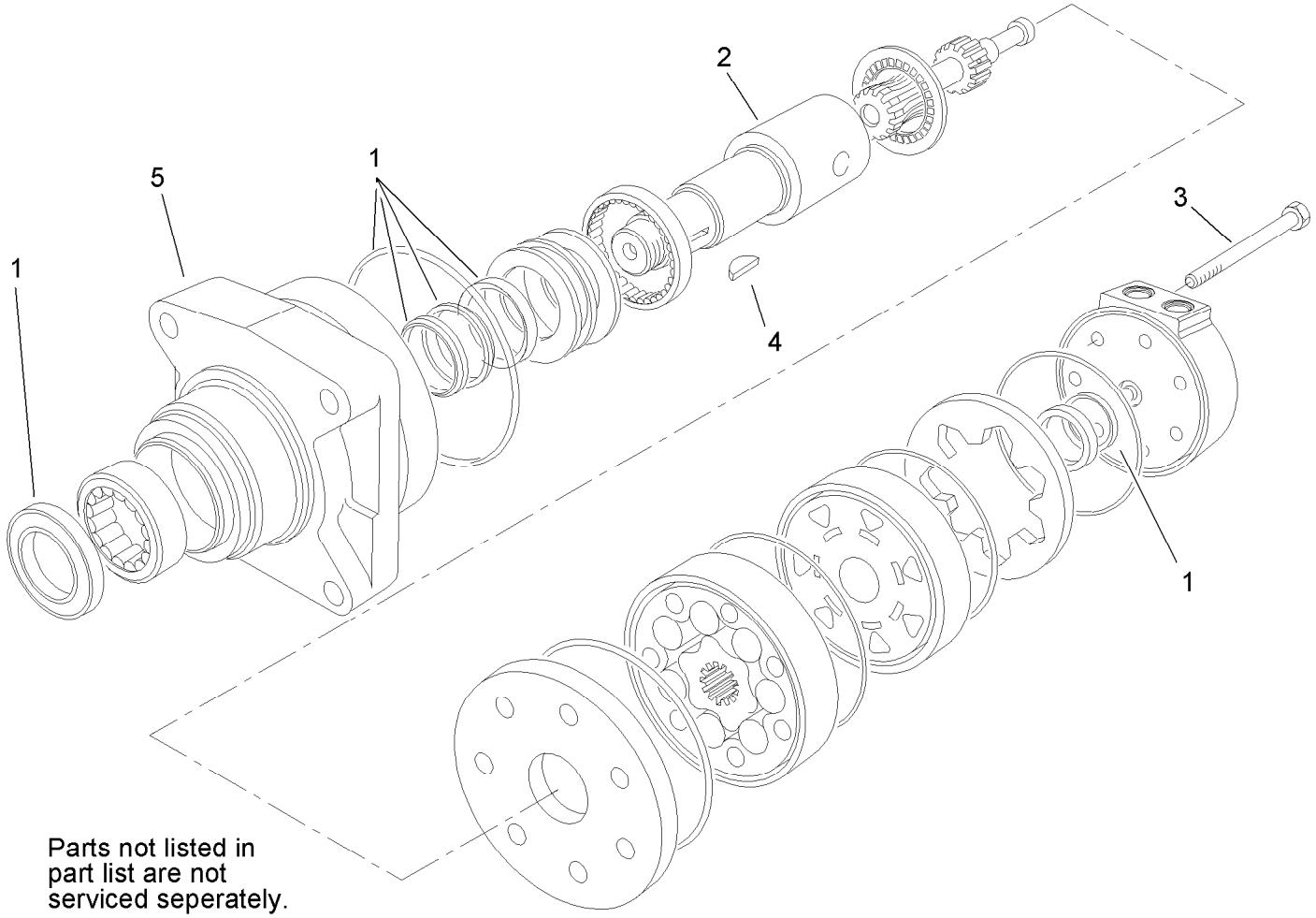


Parts not listed in part list are not serviced seperately.

# Hydraulic Motor Assembly No. 106-7654

| *Ref.* | *Part Number* | *Qty.* | *Description* |
|---|---|---|---|
| 1 | 100-6131 | 1 | Seal Kit |
| 2 | 106-7645 | 1 | Coupling-Shaft |
| 3 | 100-4241 | 7 | Screw-HH |
| 4 | 3257-42 | 1 | Key-Woodruff |
| 5 | 108-5634 | 1 | Motor Housing ASM |

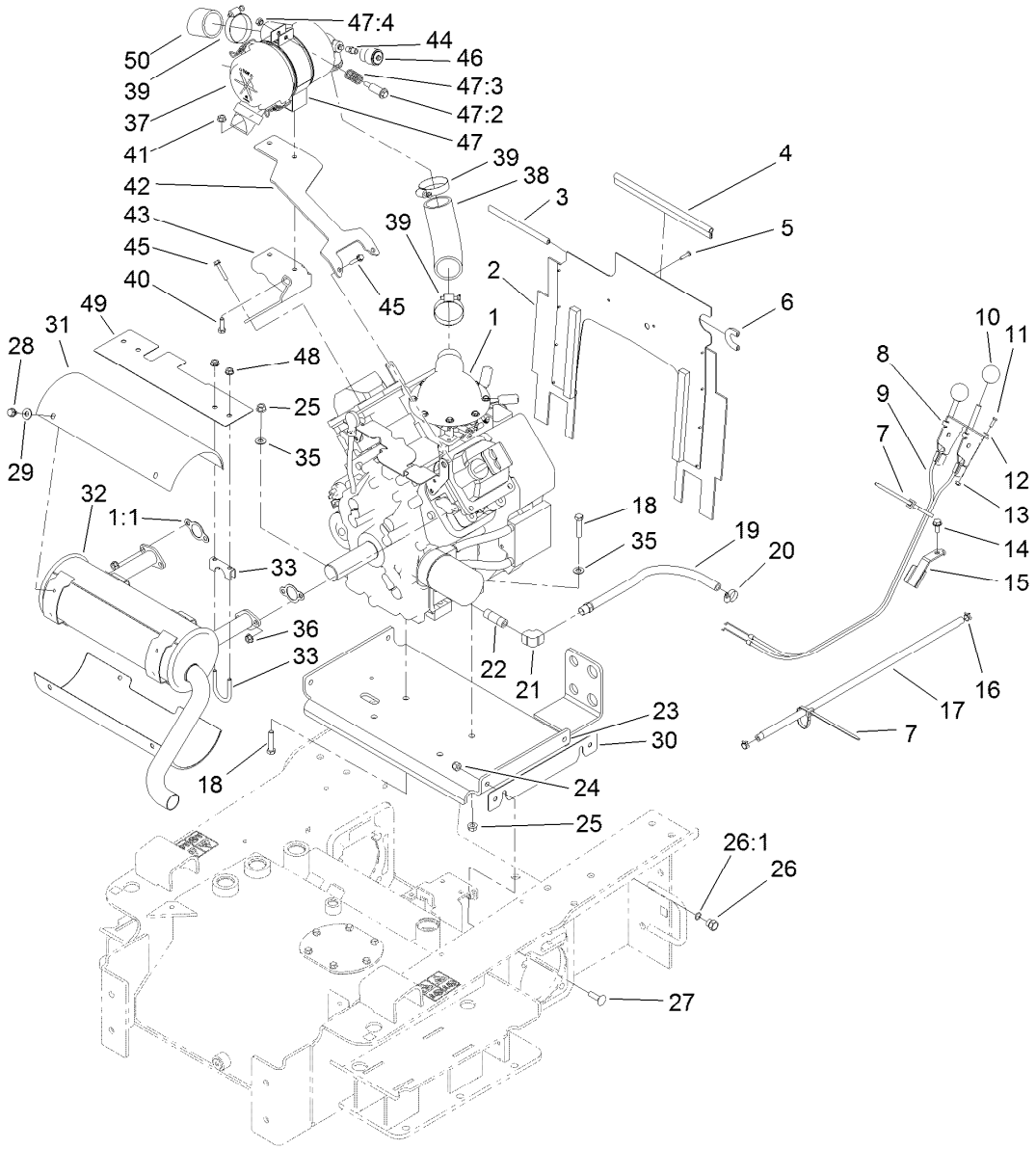


# Engine Assembly

| Ref. | Part Number | Qty. | Description |
|---|---|---|---|
| 1 | | 1 | Engine-Kohler, Ch740-3136 ●■ |
| 1:1 | 93-0350 | 2 | Gasket-Exhaust |
| 2 | 114-8725 | 1 | Baffle-Engine |
| 3 | 105-0378 | 1 | Seal-Strip, 6.5 Inch |
| 4 | 115-4837 | 1 | Strip-Seal, 10.5 Inch |
| 5 | 32144-36 | 2 | Screw-PPH |
| 6 | 105-0377 | 1 | Seal-Strip, 3 Inch |
| 7 | 3290-378 | 2 | Tie-Cable |
| 8 | 108-9730 | 2 | Lever-Control |
| 9 | 108-4679 | 2 | Cable-Throttle/Choke |
| 10 | 233-42 | 2 | Knob |
| 11 | 3290-134 | 4 | Screw |
| 12 | 3256-51 | 4 | Washer-Flat |
| 13 | 32149-7 | 4 | Nut-Keps |
| 14 | 32144-11 | 1 | Screw-HWH |
| 15 | 100-1299-03 | 1 | Guide-Cable |
| 16 | 2412-98 | 2 | Clamp-Hose |
| 17 | 109-0301 | 1 | Hose-Fuel |
| 18 | 323-53 | 4 | Screw-HH |
| 19 | 100-1256 | 1 | Oil Hose ASM |
| 20 | 2412-36 | 1 | Clamp-Hose |
| 21 | 94-9650 | 1 | Elbow-90 DEG |
| 22 | 289-42 | 1 | Nipple |
| 23 | 114-1288-03 | 1 | Plate-Mounting, Engine |
| 24 | 3296-39 | 4 | Nut-Lock, NI |
| 25 | 32128-21 | 4 | Nut-HF Lock |
| 26 | 353-508 | 1 | Plug-HH |
| 26:1 | 237-42 | 1 | O-Ring |
| 27 | 3231-28 | 4 | Screw-CARR |
| 28 | 9266934 | 8 | Screw |
| 29 | 3256-3 | 8 | Washer-Flat |
| 30 | 117-1811-03 | 1 | Shim-Strap |
| 31 | 117-9973 | 2 | Shield-Muffler |
| 32 | 115-1509 | 1 | Muffler |
| 33 | 114-1365 | 2 | Clamp-Muffler |

● Not serviced separately

■ Obtain parts from www.kohlerplus.com

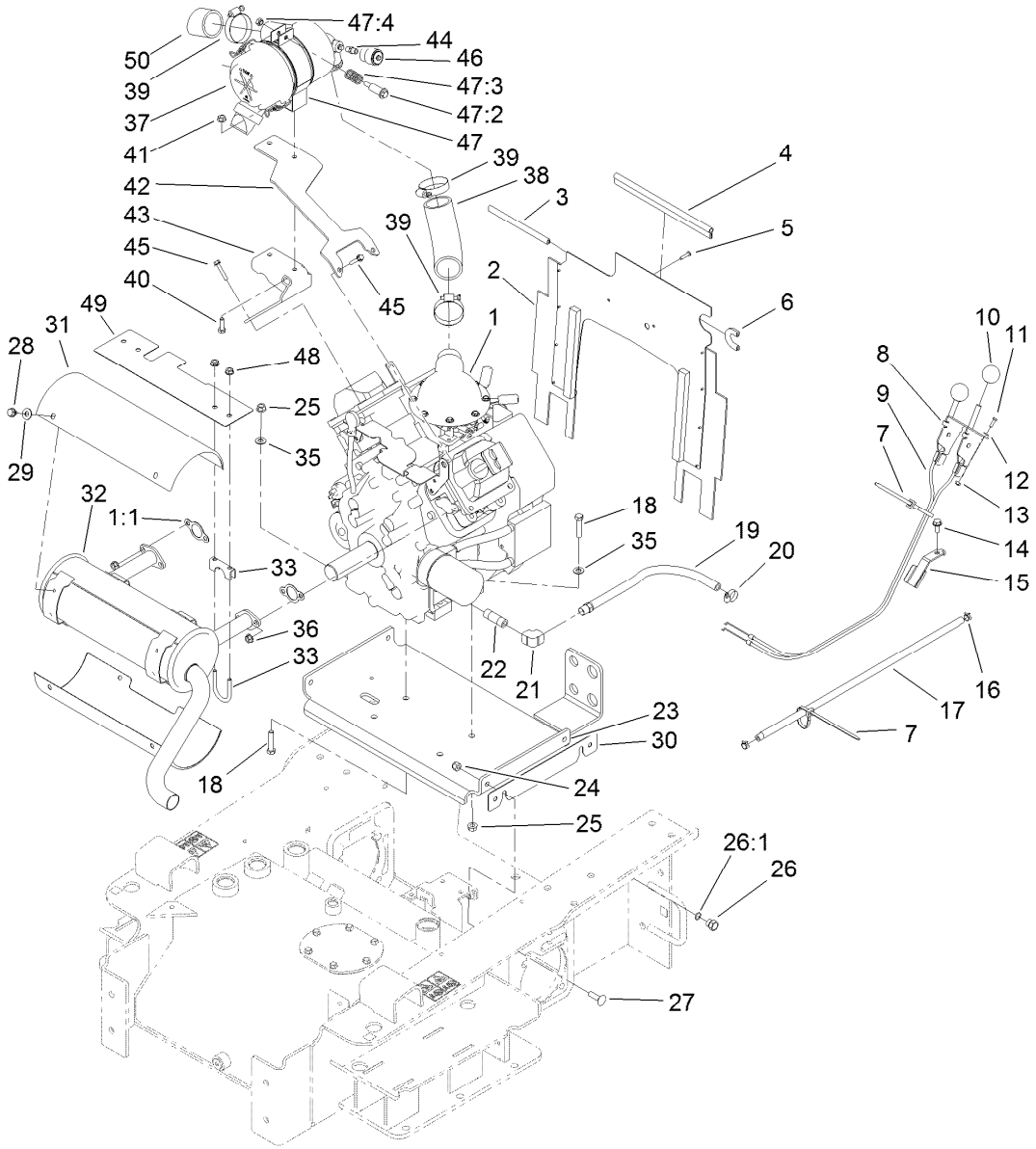


# Engine Assembly (continued)

| Ref. | Part Number | Qty. | Description |
|---|---|---|---|
| 35 | 48-9220 | 4 | Washer-Flat |
| 36 | 112-2844 | 4 | Nut-HF |
| 37 | 117-9989 | 1 | Air Cleaner ASM |
| 38 | 114-8734 | 1 | Hose-Air Cleaner |
| 39 | 2412-92 | 3 | Clamp-Hose |
| 40 | 322-5 | 2 | Screw-HH |
| 41 | 32128-20 | 2 | Nut-HF |
| 42 | 117-1728-03 | 1 | Bracket-Support, Left |
| 43 | 117-1729-03 | 1 | Bracket-Support, Right |
| 44 | 105-4292 | 1 | Nipple-Pipe |

| Ref. | Part Number | Qty. | Description |
|---|---|---|---|
| 45 | 33103-035 | 4 | Screw-HHF |
| 46 | 93-9164 | 1 | Indicator-Mini |
| 47 | 93-2191 | 1 | Air Cleaner Mounting Band ASM |
| 47:2 | 94-3653 | 1 | Bolt |
| 47:3 | 94-3654 | 1 | Spring |
| 47:4 | 48-9510 | 1 | *obs* Nut |
| 48 | 32128-25 | 4 | Nut-HF |
| 49 | 114-1366 | 1 | Shield-Manifold |
| 50 | 114-1364 | 1 | Tube-Inlet, Air |

● Not serviced separately

■ Obtain parts from www.kohlerplus.com

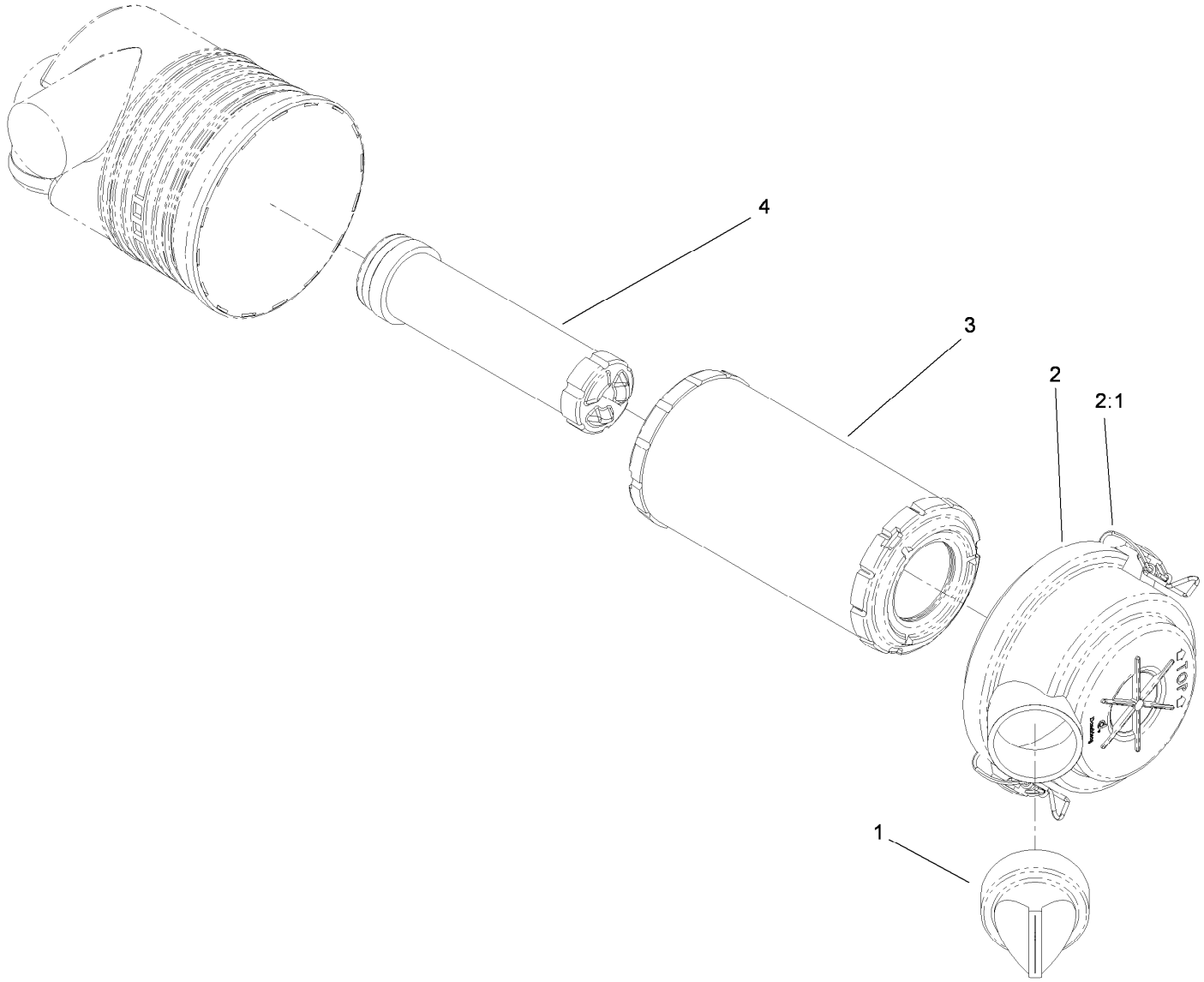


# Air Cleaner Assembly No. 117-9989

| *Ref.* | *Part Number* | *Qty.* | *Description* |
|---|---|---|---|
| 1 | 87-9400 | 1 | Valve-Vacuator |
| 2 | 94-3652 | 1 | Cover ASM |
| 2:1 | 1-643283 | 2 | Latch-Cleaner, Air |
| 3 | 108-3811 | 1 | Filter-Air V-Twin HD |
| 4 | 98-2982 | 1 | Filter-Element, Safety |

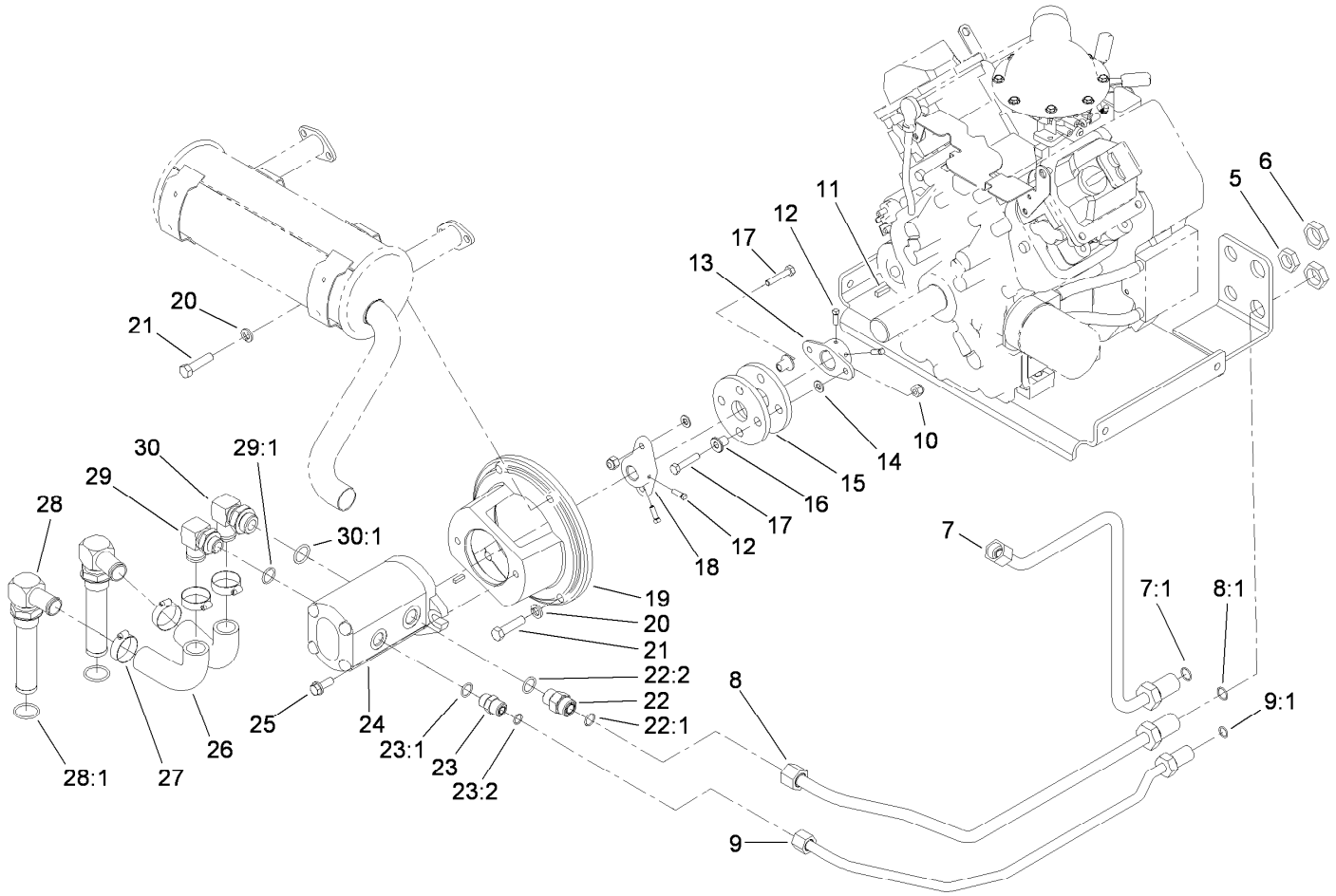


# Hydraulic Pump and Filter Assembly

| Ref. | Part Number | Qty. | Description |
|---|---|---|---|
| 5 | 340-127 | 1 | Nut-Bulkhead |
| 6 | 340-74 | 2 | Nut-Lock, Bulkhead |
| 7 | 106-9333 | 1 | HYD Tube ASM |
| 7:1 | 237-65 | 1 | O-Ring |
| 8 | 114-1355 | 1 | HYD Tube ASM |
| 8:1 | 237-65 | 1 | O-Ring |
| 9 | 114-1356 | 1 | HYD Tube ASM |
| 9:1 | 237-30 | 1 | O-Ring |
| 10 | 3296-29 | 4 | Nut-Lock, NI |
| 11 | 10-7070 | 1 | Key-Square |
| 12 | 3241-6 | 4 | Screw-SQH |
| 13 | 110-5236 | 1 | Hub-Engine |
| 14 | 3256-23 | 4 | Washer-Plain |
| 15 | 115-4523 | 2 | Coupling-Rubber |
| 16 | 71-4411 | 4 | Spacer |
| 17 | 322-8 | 4 | Screw-HH |
| 18 | 110-9695 | 1 | Hub-Pump |
| 19 | 98-2751-03 | 1 | Mount-Pump |

| Ref. | Part Number | Qty. | Description |
|---|---|---|---|
| 20 | 3253-6 | 4 | Washer-Lock |
| 21 | 324-7 | 4 | Screw-HH |
| 22 | 340-7 | 1 | Fitting-Straight |
| 22:1 | 237-65 | 1 | O-Ring |
| 22:2 | 237-80 | 1 | O-Ring |
| 23 | 340-4 | 1 | Fitting-Straight |
| 23:1 | 237-30 | 1 | O-Ring |
| 23:2 | 237-79 | 1 | O-Ring |
| 24 | 106-7650 | 1 | HYD Pump ASM |
| 25 | 66-9300 | 2 | Screw-HHF |
| 26 | 105-0201 | 2 | Hose-Suction, Formed |
| 27 | 2412-34 | 4 | Clamp-Hose |
| 28 | 105-0204 | 2 | Strainer Fitting ASM |
| 28:1 | 237-146 | 1 | O-Ring |
| 29 | 61-2710 | 1 | Stem-Hose, 90 DEG |
| 29:1 | 237-117 | 1 | O-Ring |
| 30 | 100-4202 | 1 | Fitting-90 |
| 30:1 | 237-81 | 1 | O-Ring |

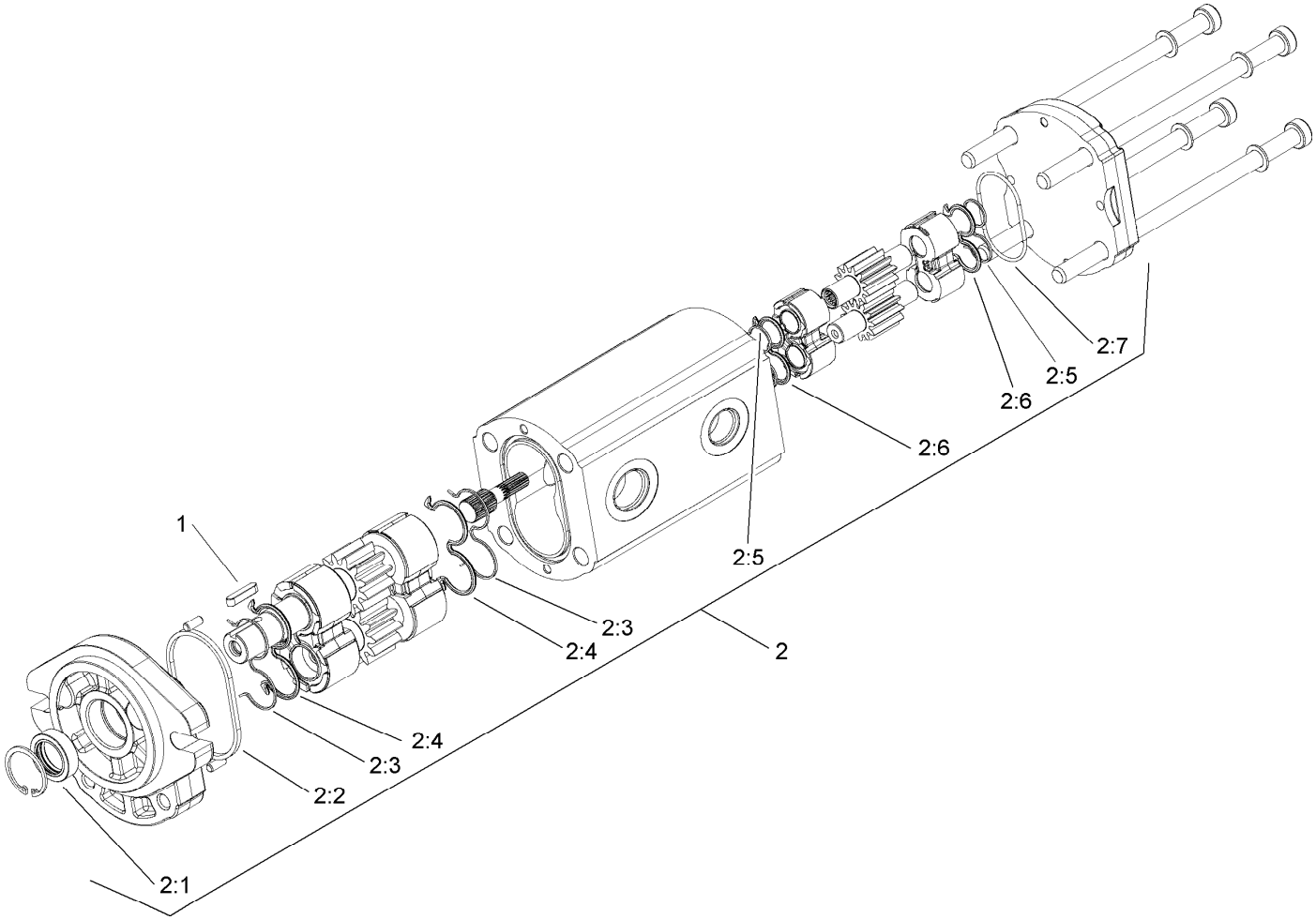


# Hydraulic Gear Pump Assembly No. 106-7650

| *Ref.* | *Part Number* | *Qty.* | *Description* |
|---|---|---|---|
| 1 | 100-4238 | 1 | Key-Square |
| 2 | 107-9316 | 1 | Seal Kit |
| 2:1 | | 1 | Seal-Shaft ● |
| 2:2 | | 1 | Seal-Square ● |
| 2:3 | | 2 | Ring-Backup ● |
| 2:4 | | 2 | Seal-Gear ● |
| 2:5 | | 2 | Ring-Backup ● |
| 2:6 | | 2 | Seal-Gear, Rear ● |
| 2:7 | | 1 | O-Ring ● |

● Not serviced separately

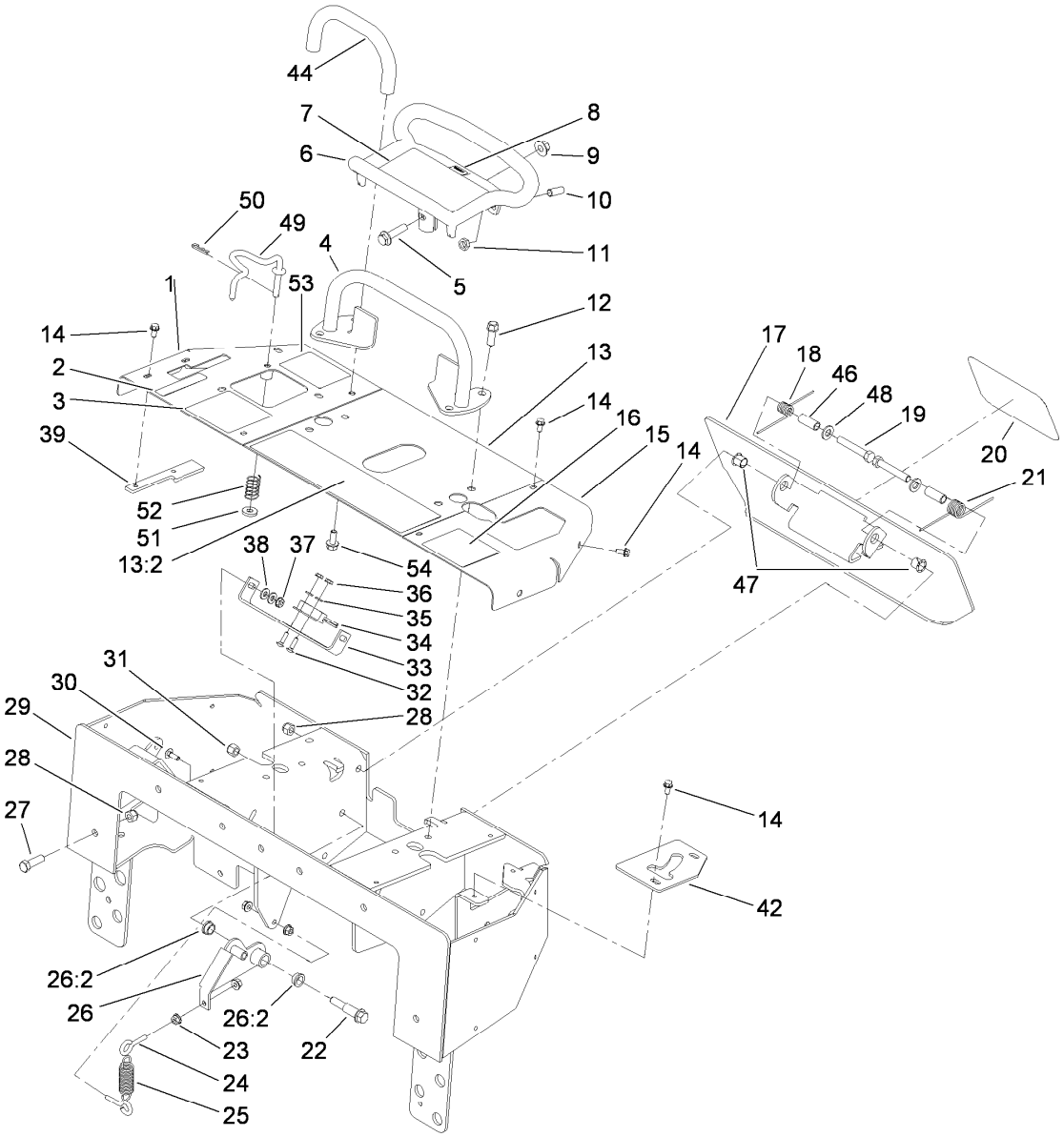


# Control Panel Assembly

| Ref. | Part Number | Qty. | Description |
|---|---|---|---|
| 1 | 115-4836-01 | 1 | Panel-RH |
| 2 | 115-4859 | 1 | Decal-Brake |
| 3 | 115-4857 | 1 | Decal-Control, Loader |
| 4 | 106-7715 | 1 | Bar-Reference |
| 5 | 3234-18 | 1 | Screw-HHF |
| 6 | 106-7614-03 | 1 | Handle-Control |
| 7 | 115-4020 | 1 | Decal-Traction |
| 8 | 98-1459 | 1 | Decal |
| 9 | 32128-43 | 1 | Nut-Flange |
| 10 | 3247-6 | 2 | Screw-Set |
| 11 | 3218-3 | 2 | Nut-Jam |
| 12 | 95-1726 | 4 | Screw-Taptite |
| 13 | 108-4643 | 1 | Center Panel ASM |
| 13:2 | 115-4860 | 1 | Decal-Danger |
| 14 | 9266714 | 11 | Screw-HWH |
| 15 | 112-2737-01 | 1 | Panel-LH |
| 16 | 115-4861 | 1 | Decal-Control, Auxiliary |
| 17 | 112-2786-03 | 1 | Plate-Reverse |
| 18 | 98-8425 | 1 | Spring-Torsion, LH |
| 19 | 323-11 | 2 | Screw-HH |
| 20 | 105-1217 | 1 | Decal |

| Ref. | Part Number | Qty. | Description |
|---|---|---|---|
| 21 | 98-8424 | 1 | Spring-Torsion, RH |
| 22 | 66-0560 | 1 | Bolt-Shoulder |
| 23 | 32128-32 | 4 | Nut-HHF |
| 24 | 71-2870 | 2 | Bolt-Eye |
| 25 | 108-4724 | 1 | Spring-Extension |
| 26 | 100-4203 | 1 | Neutral Centering Lever ASM |
| 26:2 | 256-156 | 2 | Bushing-Flange |
| 27 | 323-7 | 5 | Screw-HH |
| 28 | 3296-39 | 7 | Nut-Lock, NI |
| 29 | 110-0228-01 | 1 | Panel-Control |
| 30 | 3229-1 | 2 | Screw-CARR |
| 31 | 3296-6 | 1 | Nut-Lock |
| 32 | 3229-20 | 2 | Screw-CARR |
| 33 | 100-1263 | 1 | Plate-Switch |
| 34 | 100-1270 | 1 | Switch-Proximity |
| 35 | 3256-51 | 2 | Washer-Flat |
| 36 | 32149-7 | 2 | Nut-Keps |
| 37 | 32149-2 | 2 | Nut-Keps |
| 38 | 3256-22 | 4 | Washer-Flat |
| 39 | 112-2691-01 | 1 | Plate-Locking, Brake |

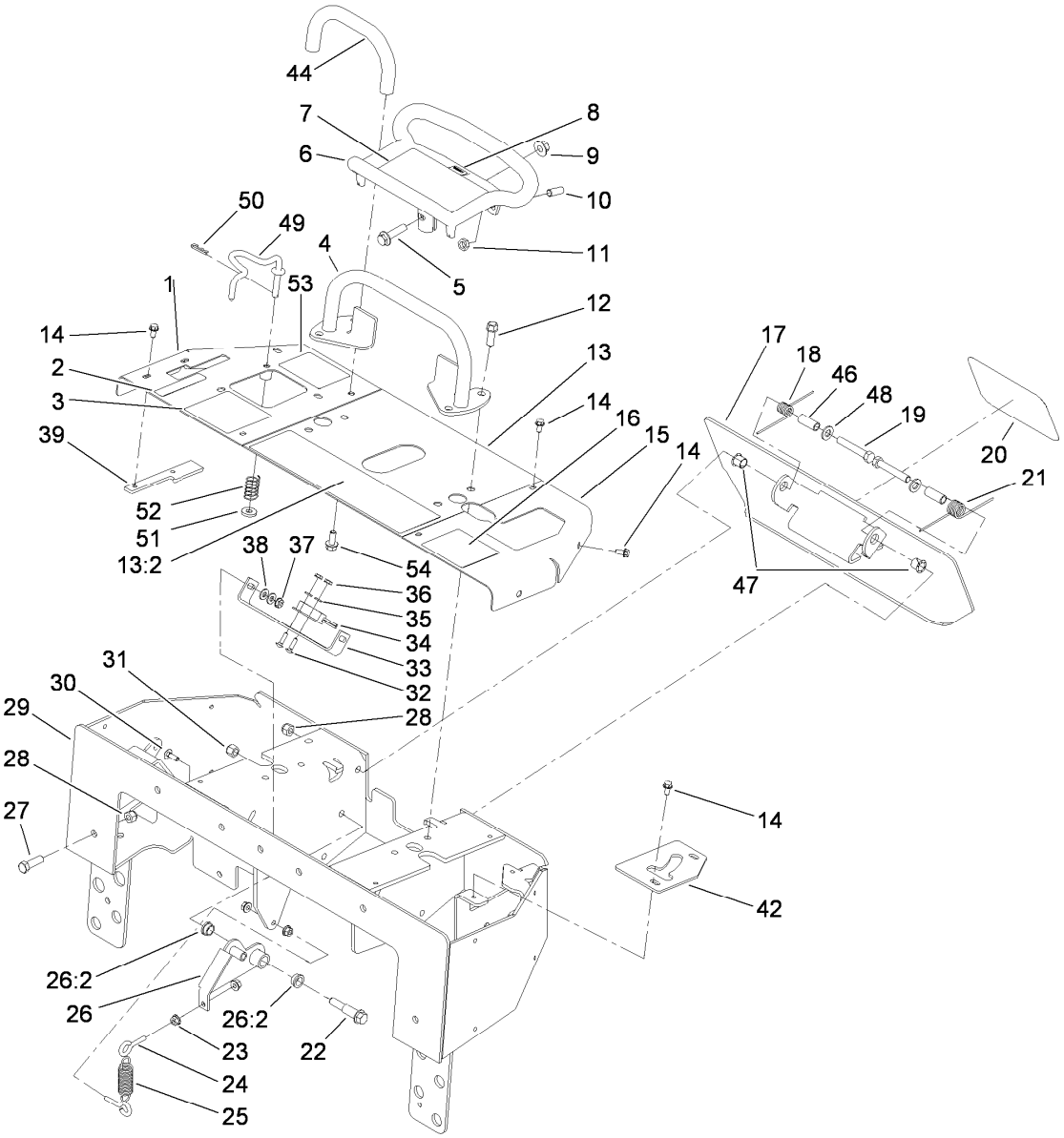


# Control Panel Assembly (continued)

| Ref. | Part Number | Qty. | Description |
|---|---|---|---|
| 42 | 112-2749-01 | 1 | Plate-Stop |
| 44 | 112-2620 | 1 | Bar-Reference |
| 46 | 114-1337 | 2 | Spacer-Spring |
| 47 | 256-257 | 2 | Bushing-Nyliner |
| 48 | 3256-24 | 2 | Washer-Plain |
| 49 | 115-4580 | 1 | Rod-Interlock |

| Ref. | Part Number | Qty. | Description |
|---|---|---|---|
| 50 | 3290-307 | 1 | Pin-Cotter |
| 51 | 88-7200 | 1 | Washer-Flat |
| 52 | 85-6750 | 1 | Spring-Control |
| 53 | 115-4862 | 1 | Decal-Loader Lock |
| 54 | 3234-5 | 2 | Screw-HHF |

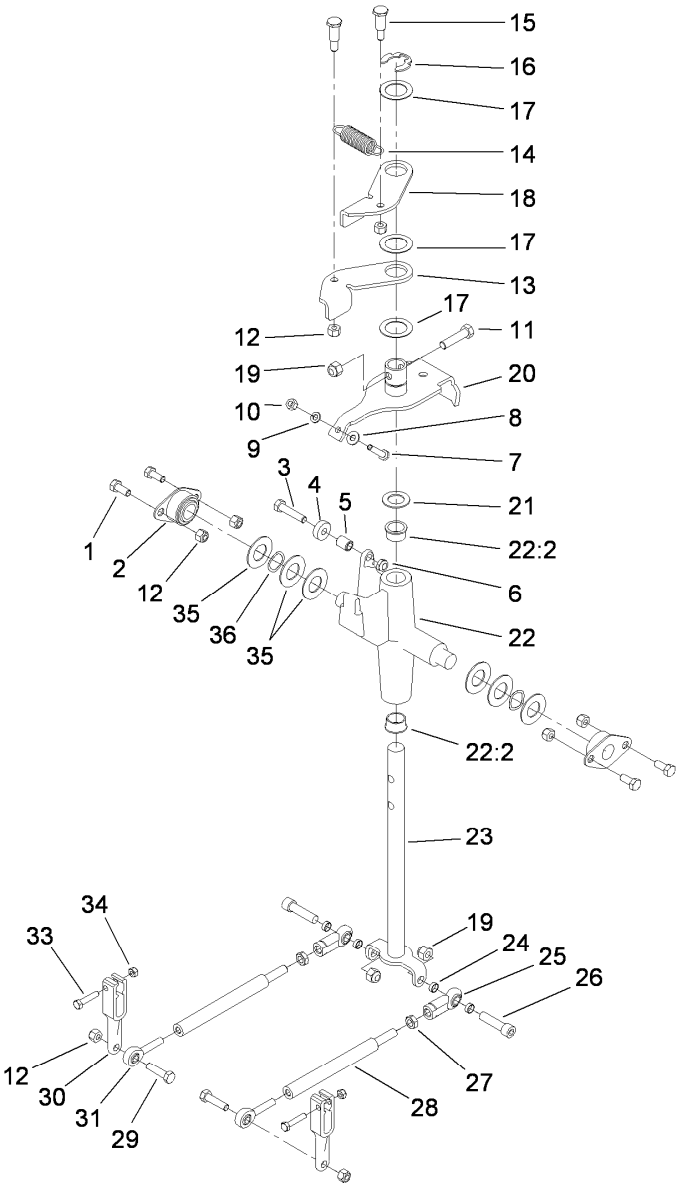


# Traction Control Assembly

| Ref. | Part Number | Qty. | Description |
|---|---|---|---|
| 1 | 322-3 | 4 | Screw-HH |
| 2 | 68-2970 | 2 | Bushing |
| 3 | 322-7 | 1 | Screw-HH |
| 4 | 251-259 | 1 | Bearing-Ball |
| 5 | 88-7450 | 1 | Spacer-Lever, Control |
| 6 | 3296-47 | 1 | Nut-Lock,NI |
| 7 | 114-0282 | 1 | Screw-HH |
| 8 | 3256-22 | 1 | Washer-Flat |
| 9 | 3253-3 | 1 | Washer-Lock |
| 10 | 3217-5 | 1 | Nut-Hex |
| 11 | 323-8 | 1 | Screw-HH |
| 12 | 3296-29 | 8 | Nut-Lock, NI |
| 13 | 98-8407 | 1 | Lever-Return, RH |
| 14 | 108-4724 | 1 | Spring-Extension |
| 15 | 63-2650 | 2 | Screw-Shoulder |
| 16 | 32151-91 | 1 | Ring-Retaining |
| 17 | 108-9743 | 3 | Washer-Plain |
| 18 | 98-8408 | 1 | Lever-Return, LH |

| Ref. | Part Number | Qty. | Description |
|---|---|---|---|
| 19 | 3296-39 | 3 | Nut-Lock, NI |
| 20 | 112-2783 | 1 | Lever-Pivot |
| 21 | 257-8 | 1 | Washer-Thrust |
| 22 | 106-5737 | 1 | Control Support ASM |
| 22:2 | 256-252 | 2 | Bearing-Flange |
| 23 | 117-6335 | 1 | Rod-Drive |
| 24 | 117-9915 | 4 | Spacer |
| 25 | 103-1167 | 2 | Joint-Ball End, LH |
| 26 | 3274-2 | 2 | Screw-HSH |
| 27 | 3220-16 | 2 | Nut-Hex Jam, LH |
| 28 | 117-9900 | 2 | Rod-Linkage |
| 29 | 322-6 | 2 | Screw-HH |
| 30 | 117-3964-03 | 2 | Arm-Control, Pump |
| 31 | 117-9969 | 2 | Bearing-Rod End, RH |
| 33 | 33113-030 | 2 | Screw-HH |
| 34 | 33023-00 | 2 | Nut-Lock |
| 35 | 3256-39 | 2 | Washer-Flat |
| 36 | 95-3703 | 2 | Washer-Spring, Wave |

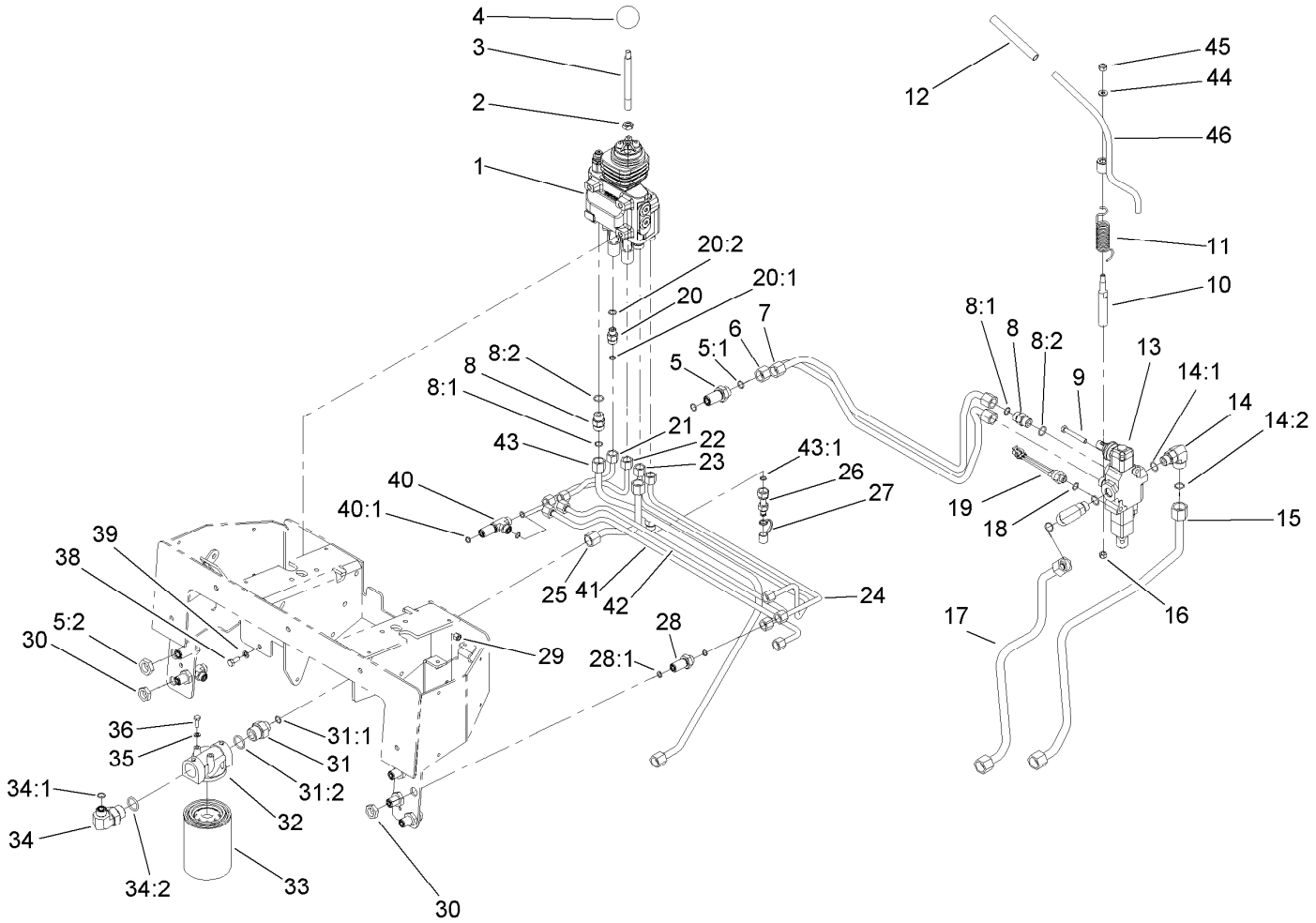


# Principal Hydraulic Assembly

| Ref. | Part Number | Qty. | Description |
|---|---|---|---|
| 1 | 106-9307 | 1 | 2 Spool Valve ASM |
| 2 | 51-2070 | 1 | Nut |
| 3 | 108-4675 | 1 | Shaft-Handle, Loader |
| 4 | 233-21 | 1 | Knob |
| 5 | 340-161 | 2 | Fitting-Bulkhead |
| 5:1 | 237-30 | 2 | O-Ring |
| 5:2 | 340-127 | 1 | Nut-Bulkhead |
| 6 | 106-9310 | 1 | Tube-HYD |
| 7 | 106-9311 | 1 | Tube-HYD |
| 8 | 340-4 | 4 | Fitting-Straight |
| 8:1 | 237-30 | 1 | O-Ring |
| 8:2 | 237-79 | 1 | O-Ring |
| 9 | 322-11 | 2 | Screw-HH |
| 10 | 104-2827 | 1 | Spacer-Hiflo |
| 11 | 112-2738 | 1 | Spring-Torsion |
| 12 | 112-2605 | 1 | Grip-Rubber |
| 13 | 104-2831 | 1 | 1 Spool Valve ASM |
| 14 | 340-153 | 2 | Fitting-Elbow, 90 DEG |
| 14:1 | 237-79 | 1 | O-Ring |
| 14:2 | 237-151 | 1 | O-Ring |
| 15 | 106-9309 | 1 | Tube-HYD |
| 16 | 48-7740 | 1 | Screw |
| 17 | 104-5707 | 1 | Tube-HYD |
| 18 | 237-42 | 1 | O-Ring |
| 19 | 72-4310 | 1 | Switch-Ball |
| 20 | 340-2 | 4 | Fitting-Straight |
| 20:1 | 237-22 | 1 | O-Ring |

| Ref. | Part Number | Qty. | Description |
|---|---|---|---|
| 20:2 | 237-42 | 1 | O-Ring |
| 21 | 106-9315 | 1 | Tube-HYD |
| 22 | 106-9313 | 1 | Tube-HYD |
| 23 | 106-9312 | 1 | Tube-HYD |
| 24 | 106-9314 | 1 | Tube-HYD |
| 25 | 106-9385 | 1 | Tube-HYD |
| 26 | 86-5480 | 1 | Nipple-Test |
| 27 | 354-79 | 1 | Cap-Dust |
| 28 | 340-71 | 4 | Fitting-Straight, Bulkhead |
| 28:1 | 237-22 | 2 | O-Ring |
| 29 | 3296-29 | 2 | Nut-Lock, NI |
| 30 | 340-70 | 6 | Nut-Lock |
| 31 | 100-4240 | 1 | Fitting-STR |
| 31:1 | 237-30 | 1 | O-Ring |
| 31:2 | 237-81 | 1 | O-Ring |
| 32 | 92-5821 | 1 | Head-Filter |
| 33 | 86-3010 | 2 | Filter-Oil |
| 34 | 340-131 | 1 | Fitting-HYD, 90 DEG |
| 34:1 | 237-30 | 1 | O-Ring |
| 34:2 | 237-81 | 1 | O-Ring |
| 35 | 3253-3 | 2 | Washer-Lock |
| 36 | 321-4 | 2 | Screw-HH |
| 38 | 322-4 | 3 | Screw-HH |
| 39 | 3253-4 | 3 | Washer-Lock |
| 40 | 340-68 | 2 | Fitting-Tee, Bulkhead |
| 40:1 | 237-22 | 3 | O-Ring |
| 41 | 106-9316 | 1 | Tube-HYD |
| 42 | 106-9317 | 1 | Tube-HYD |

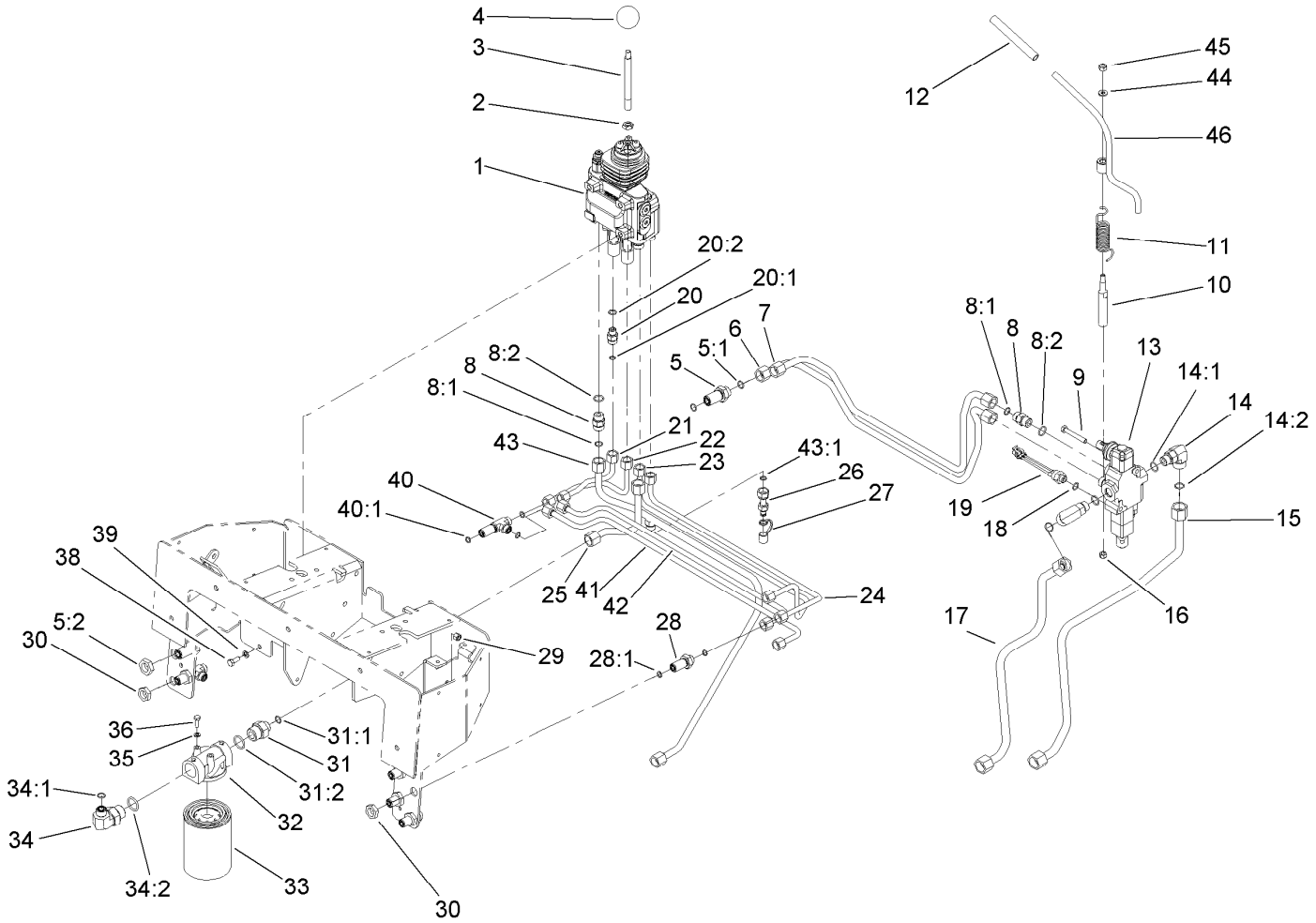


# Principal Hydraulic Assembly (continued)

| Ref. | Part Number | Qty. | Description |
|---|---|---|---|
| 43 | 106-9387 | 1 | HYD Tube ASM |
| 43:1 | 237-22 | 1 | O-Ring |
| 44 | 3256-16 | 1 | Washer-Flat |
| 45 | 3296-42 | 1 | Nut-Lock, NI |
| 46 | 112-2739 | 1 | Lever-Auxiliary |

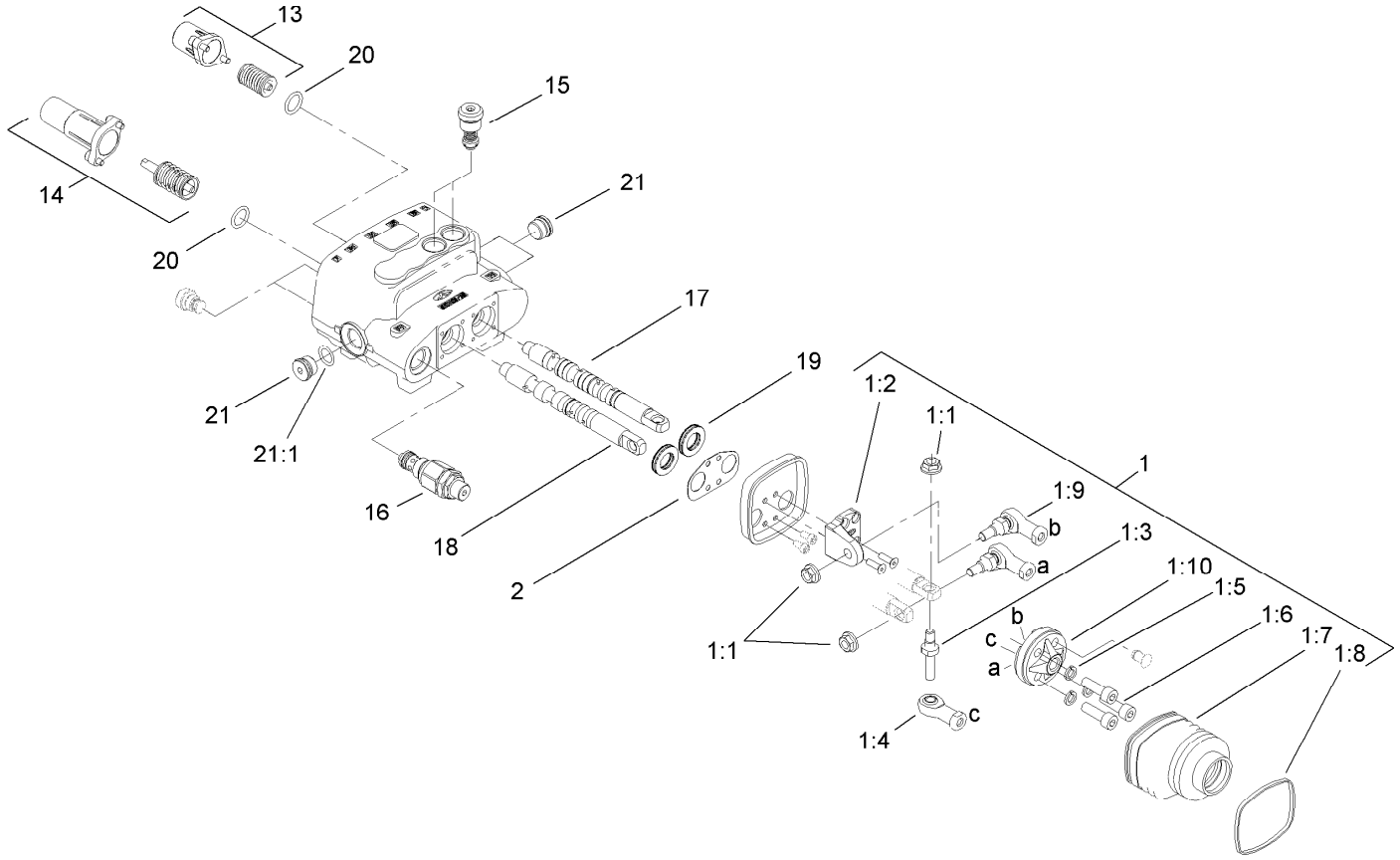


# Two Spool Valve Assembly No. 106-9307

| *Ref.* | *Part Number* | *Qty.* | *Description* |
|---|---|---|---|
| 1 | 106-7724 | 1 | Joystick Kit |
| 1:1 | 98-0668 | 3 | Nut |
| 1:2 | 106-7726 | 1 | Pivot-Joystick |
| 1:3 | 106-7727 | 1 | Pin-Joystick |
| 1:4 | 106-7728 | 1 | End-Rod |
| 1:5 | 42-9850 | 3 | Washer-Lock, Spring |
| 1:6 | 98-5828 | 3 | Screw-HSH |
| 1:7 | 106-7729 | 1 | Bellow-Rubber |
| 1:8 | 3290-379 | 1 | Tie-Cable |
| 1:9 | 106-7730 | 2 | Joint-Joystick |
| 1:10 | 106-7731 | 1 | Holder-Articulated |
| 2 | 106-7725 | 1 | Seal-Joystick |
| 13 | 106-7732 | 1 | Valve Spring Kit |
| 14 | 106-7733 | 1 | Detent Spring Kit |
| 15 | 106-7734 | 2 | Valve-Relief |
| 16 | 106-7735 | 1 | Valve-Relief, Main |
| 17 | 106-7736 | 1 | Spool-Valve |
| 18 | 106-7737 | 1 | Spool-Valve |
| 19 | 106-7738 | 2 | Seal-Valve, Spool |
| 20 | 106-7719 | 2 | Seal-Valve |
| 21 | 353-988 | 3 | Plug-Hex |
| 21:1 | 237-79 | 1 | O-Ring |

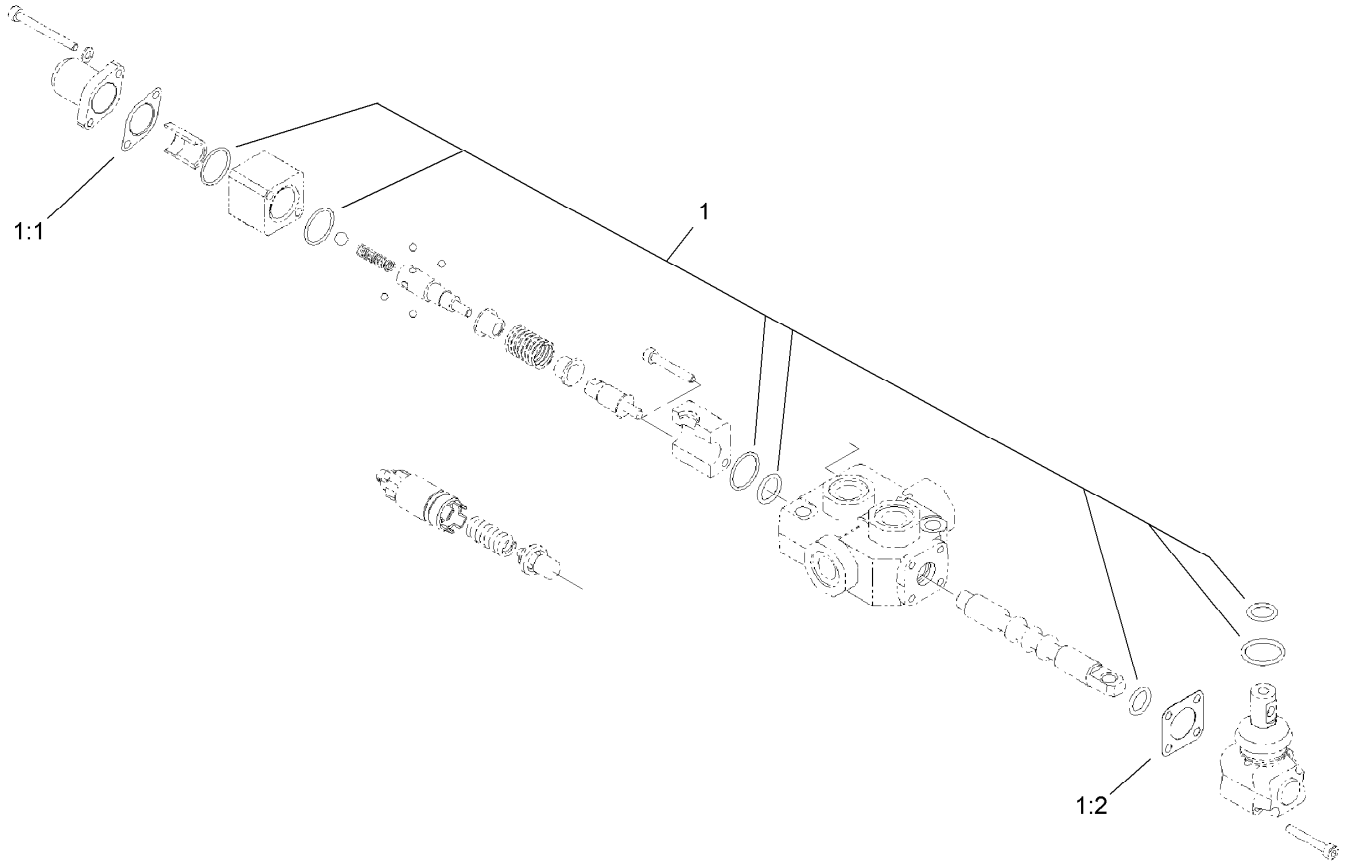


# One Spool Valve Assembly No. 104-2831

| *Ref.* | *Part Number* | *Qty.* | *Description* |
|---|---|---|---|
| 1 | 99-4390 | 1 | Seal Kit |
| 1:1 | 99-3074 | 4 | Gasket |
| 1:2 | 99-3075 | 8 | Gasket |

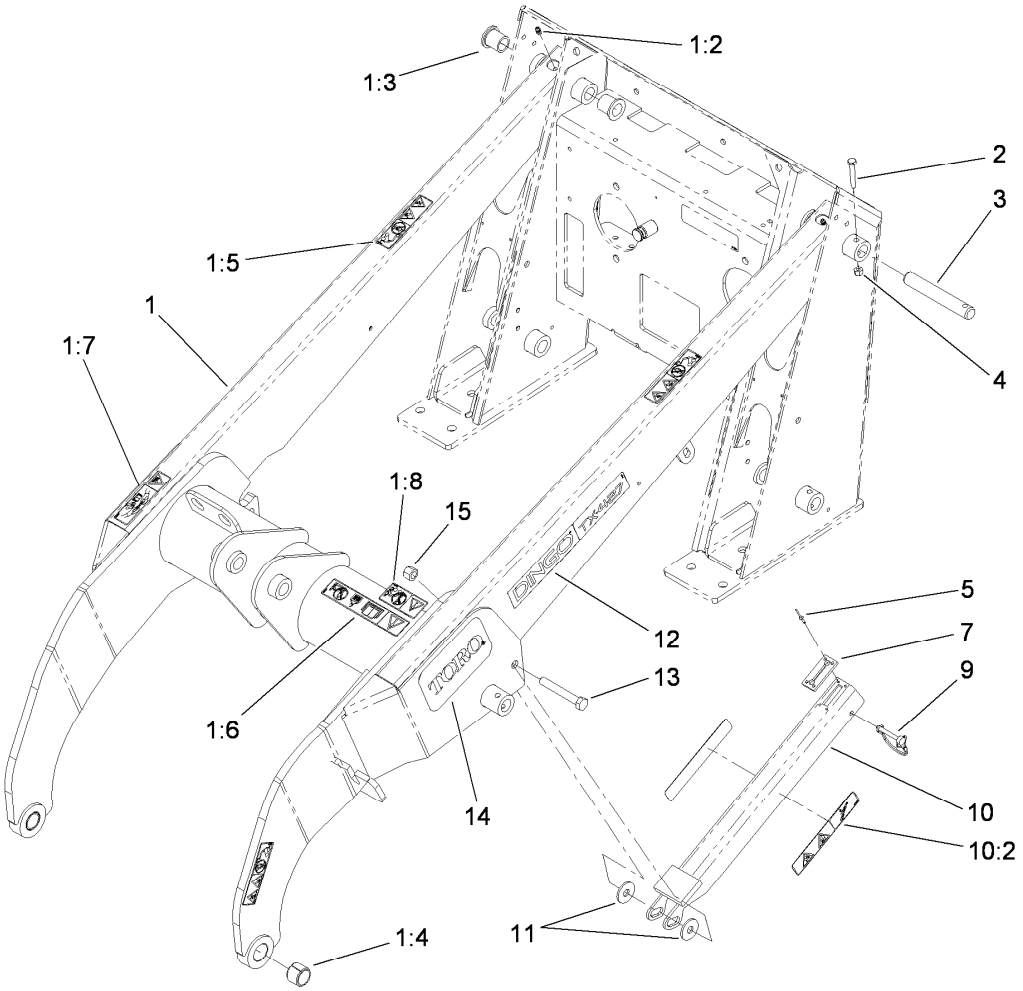


# Loader Arm Assembly

| Ref. | Part Number | Qty. | Description |
|---|---|---|---|
| 1 | 108-4638 | 1 | Loader Arm ASM |
| 1:2 | 302-5 | 2 | Fitting-Grease |
| 1:3 | 95-3577 | 4 | Bushing |
| 1:4 | 98-4871 | 2 | Bushing-Tension |
| 1:5 | 100-8821 | 4 | Decal-Warning, Pinch |
| 1:6 | 115-4856 | 1 | Decal-Caution |
| 1:7 | 115-4855 | 1 | Decal-Caution |
| 1:8 | 100-8822 | 1 | Decal-No Rider |
| 2 | 322-10 | 7 | Screw-HH |
| 3 | 104-2849 | 7 | Pin-Locking |
| 4 | 3296-29 | 7 | Nut-Lock, NI |
| 5 | 95-1687 | 4 | Rivet |
| 7 | 98-0083 | 1 | Stop-Rubber |
| 9 | 112-2583 | 1 | Pin-Locking |
| 10 | 108-4639 | 1 | Locking Arm ASM |
| 10:2 | 115-4858 | 2 | Decal-Danger |
| 11 | 68-1440 | 2 | Washer-Rubber |
| 12 | 115-4866 | 2 | Decal |
| 13 | 325-14 | 1 | Screw-HH |
| 14 | 105-1217 | 2 | Decal |
| 15 | 3296-23 | 1 | Nut-Lock, NI |

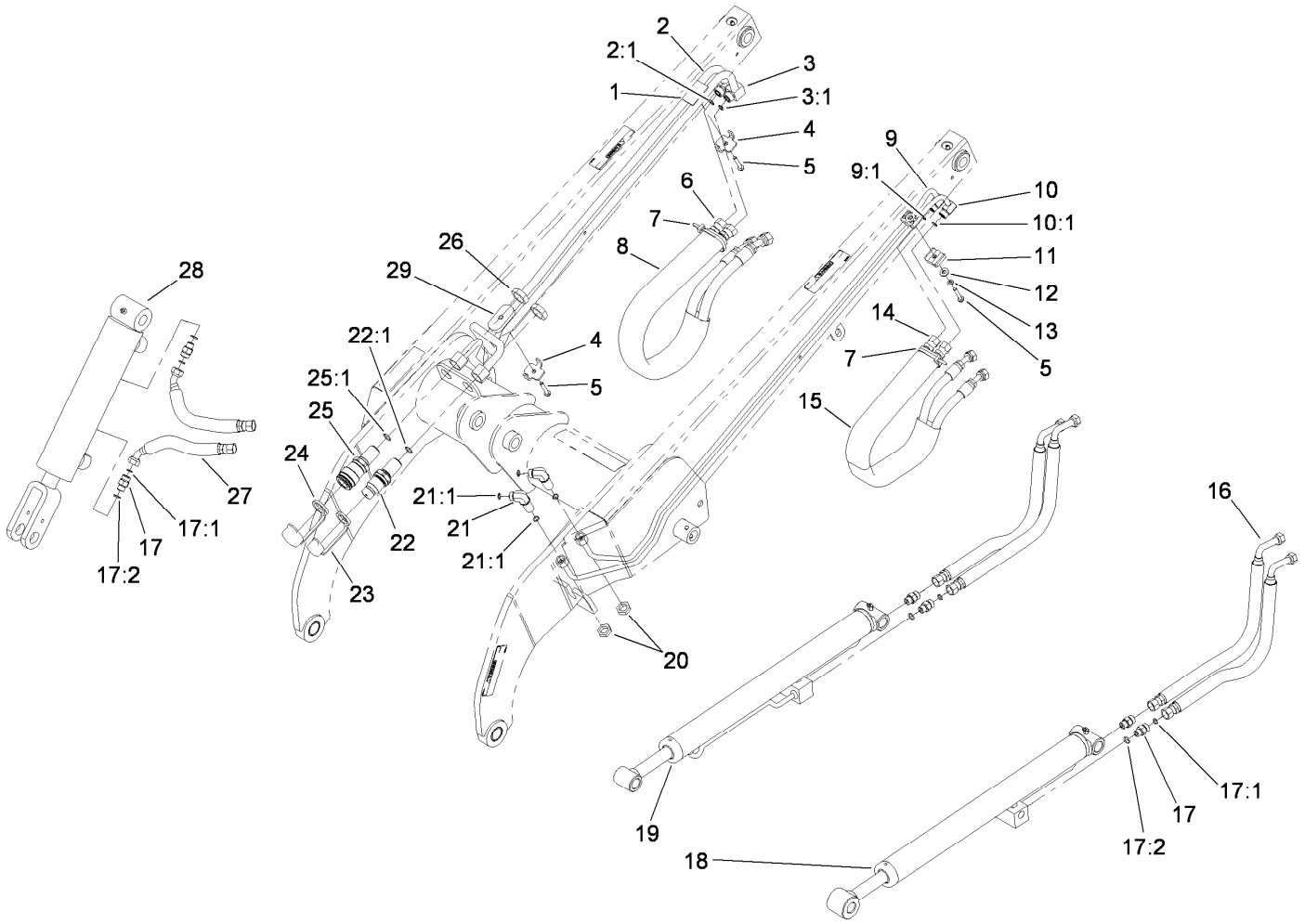


# Loader Arm Hydraulic Assembly

| Ref. | Part Number | Qty. | Description |
|---|---|---|---|
| 1 | 106-9366 | 1 | Spacer-Hardline |
| 2 | 108-6319 | 1 | HYD Tube ASM |
| 2:1 | 237-22 | 1 | O-Ring |
| 3 | 112-2563 | 1 | HYD Tube ASM |
| 3:1 | 237-22 | 1 | O-Ring |
| 4 | 98-0237 | 2 | Plate-Clamp, Tube |
| 5 | 94-2691 | 3 | Screw-HWH Taptite |
| 6 | 98-0242 | 2 | Hose-HYD |
| 7 | 3290-378 | 2 | Tie-Cable |
| 8 | 100-6128 | 1 | Sleeve-Protective |
| 9 | 106-9364 | 1 | HYD Tube ASM |
| 9:1 | 237-22 | 1 | O-Ring |
| 10 | 106-9365 | 1 | HYD Tube ASM |
| 10:1 | 237-22 | 1 | O-Ring |
| 11 | 56-7973 | 2 | Clamp-Tube |
| 12 | 3256-2 | 1 | Washer-Flat |
| 13 | 3253-3 | 1 | Washer-Lock |
| 14 | 98-0213 | 2 | Hose-HYD |
| 15 | 100-6127 | 1 | Sleeve-Protective |
| 16 | 98-0216 | 4 | Hose-HYD |

| Ref. | Part Number | Qty. | Description |
|---|---|---|---|
| 17 | 340-2 | 6 | Fitting-Straight |
| 17:1 | 237-22 | 1 | O-Ring |
| 17:2 | 237-42 | 1 | O-Ring |
| 18 | 104-6267 | 1 | LH Lift Cylinder ASM |
| 19 | 104-6269 | 1 | RH Lift Cylinder ASM |
| 20 | 340-70 | 2 | Nut-Lock |
| 21 | 340-154 | 2 | Union-Bulkhead |
| 21:1 | 237-22 | 2 | O-Ring |
| 22 | 105-8395 | 1 | Bulkhead Nipple ASM |
| 22:1 | 237-65 | 1 | O-Ring |
| 22:2 | 100-6120 | 1 | Seal Kit ● |
| 23 | 100-8815 | 1 | Cap-Dust, Nipple |
| 24 | 100-8816 | 1 | Cap-Dust, Coupler |
| 25 | 105-8394 | 1 | Bulkhead Coupler ASM |
| 25:1 | 237-65 | 1 | O-Ring |
| 26 | 340-74 | 2 | Nut-Lock, Bulkhead |
| 27 | 98-0207 | 2 | Hose-HYD |
| 28 | 105-8370 | 1 | Tilt Cylinder ASM |
| 29 | 112-2565 | 1 | Plate-Hardline |

● Not illustrated

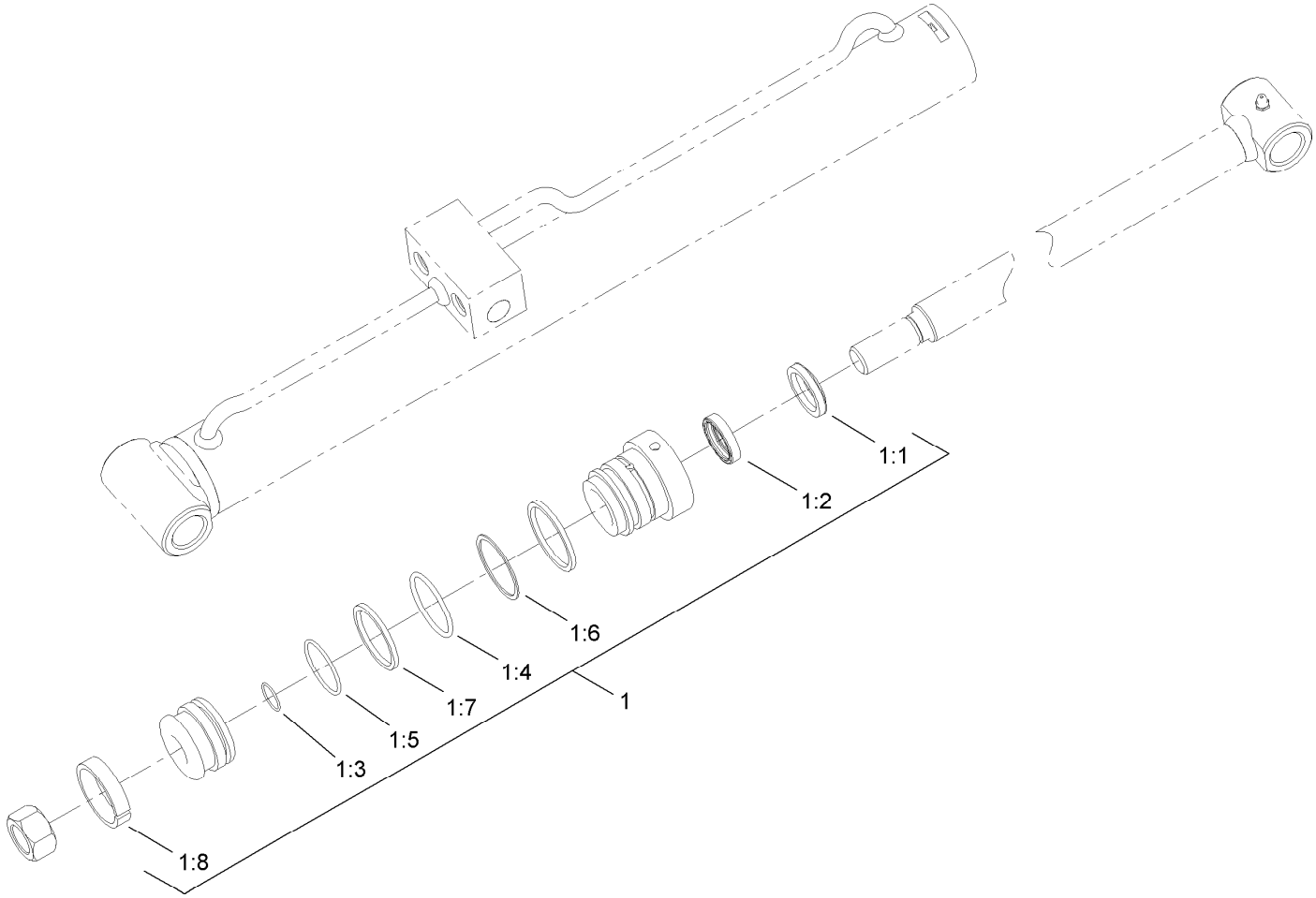


# Left Hand Hydraulic Lift Cylinder Assembly No. 104-6267

| *Ref.* | *Part Number* | *Qty.* | *Description* |
|---|---|---|---|
| 1 | 104-6268 | 1 | Seal Kit |
| 1:1 | | 1 | Wiper ● |
| 1:2 | | 1 | Seal ● |
| 1:3 | | 1 | O-Ring ● |
| 1:4 | | 1 | O-Ring ● |
| 1:5 | | 1 | O-Ring ● |
| 1:6 | | 1 | Back-Up ● |
| 1:7 | | 1 | Seal ● |
| 1:8 | | 1 | Wear Ring ● |

● Not serviced separately

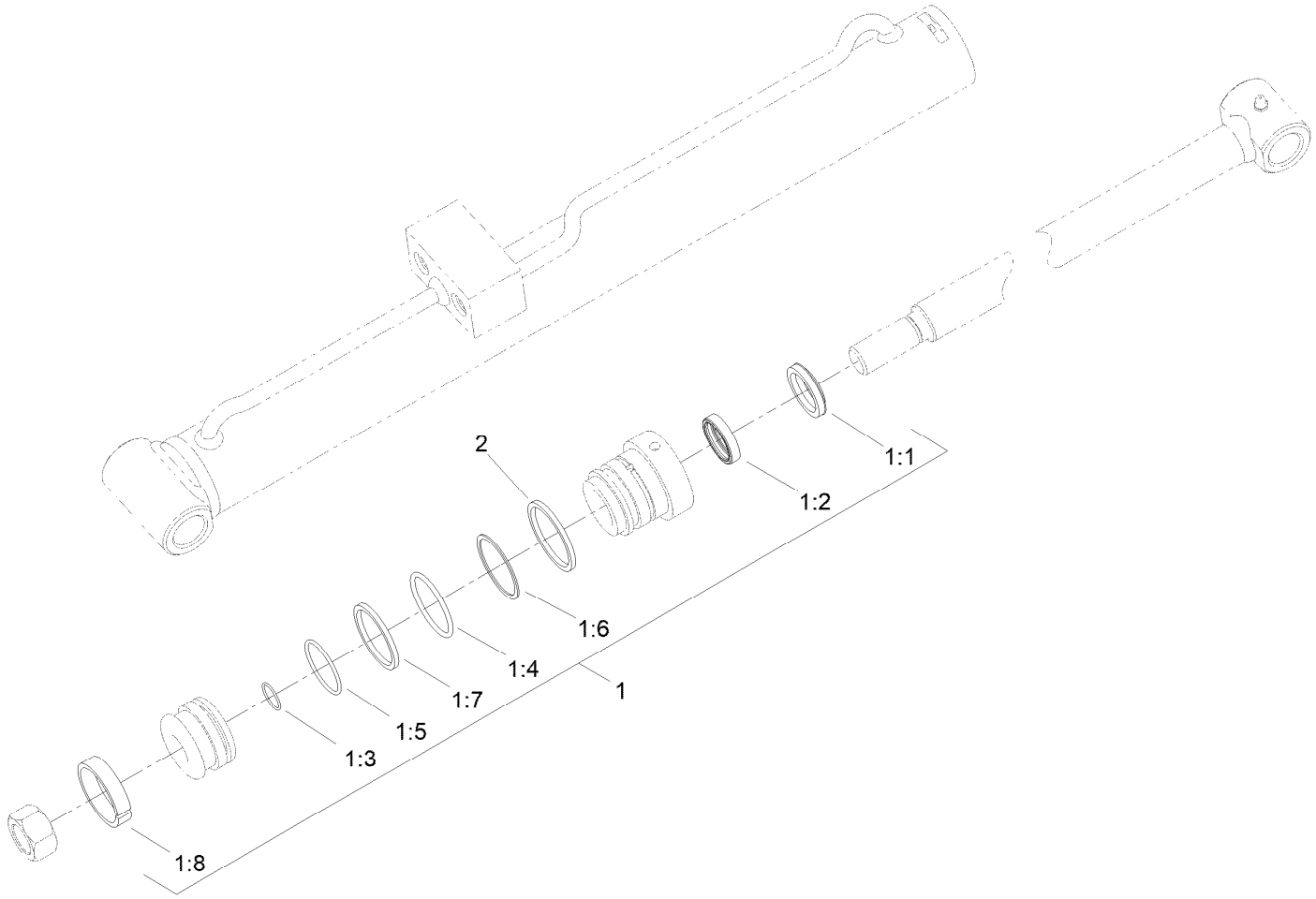


# Right Hand Hydraulic Lift Cylinder Assembly No. 104-6269

| *Ref.* | *Part Number* | *Qty.* | *Description* |
|---|---|---|---|
| 1 | 104-6268 | 1 | Seal Kit |
| 1:1 | | 1 | Wiper ● |
| 1:2 | | 1 | Seal ASM ● |
| 1:3 | | 1 | Seal-Dust ● |
| 1:4 | | 1 | Seal-Dust ● |
| 1:5 | | 1 | Seal-Dust ● |
| 1:6 | | 1 | Back-Up ● |
| 1:7 | | 1 | Seal ASM ● |
| 1:8 | | 1 | Ring-Wear ● |
| 2 | 161-7281 | 1 | Ring - Retaining |

● Not serviced separately

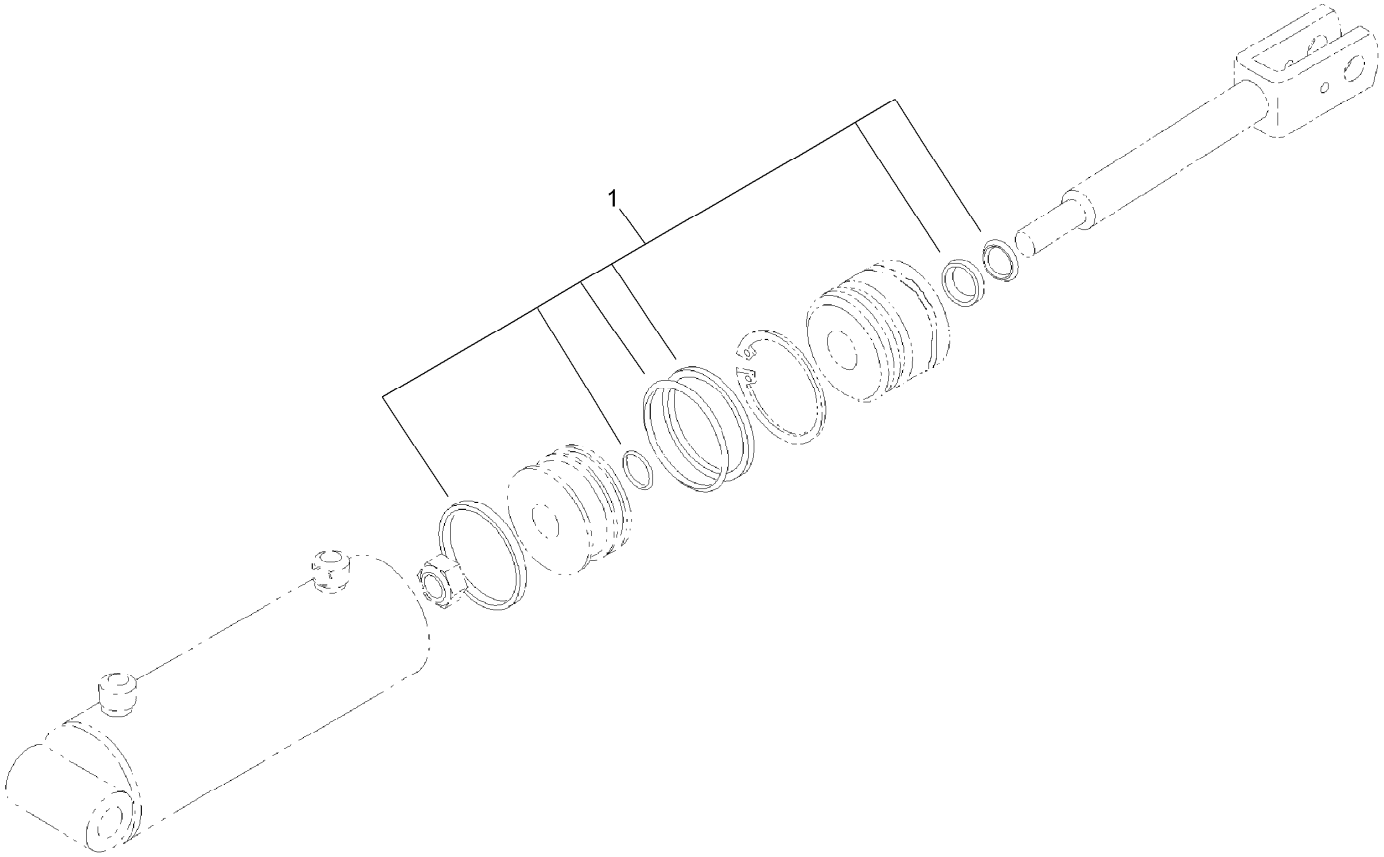


# Hydraulic Cylinder Assembly No. 105-8370

| *Ref.* | *Part Number* | *Qty.* | *Description* |
|---|---|---|---|
| 1 | 106-7567 | 1 | Seal Kit |

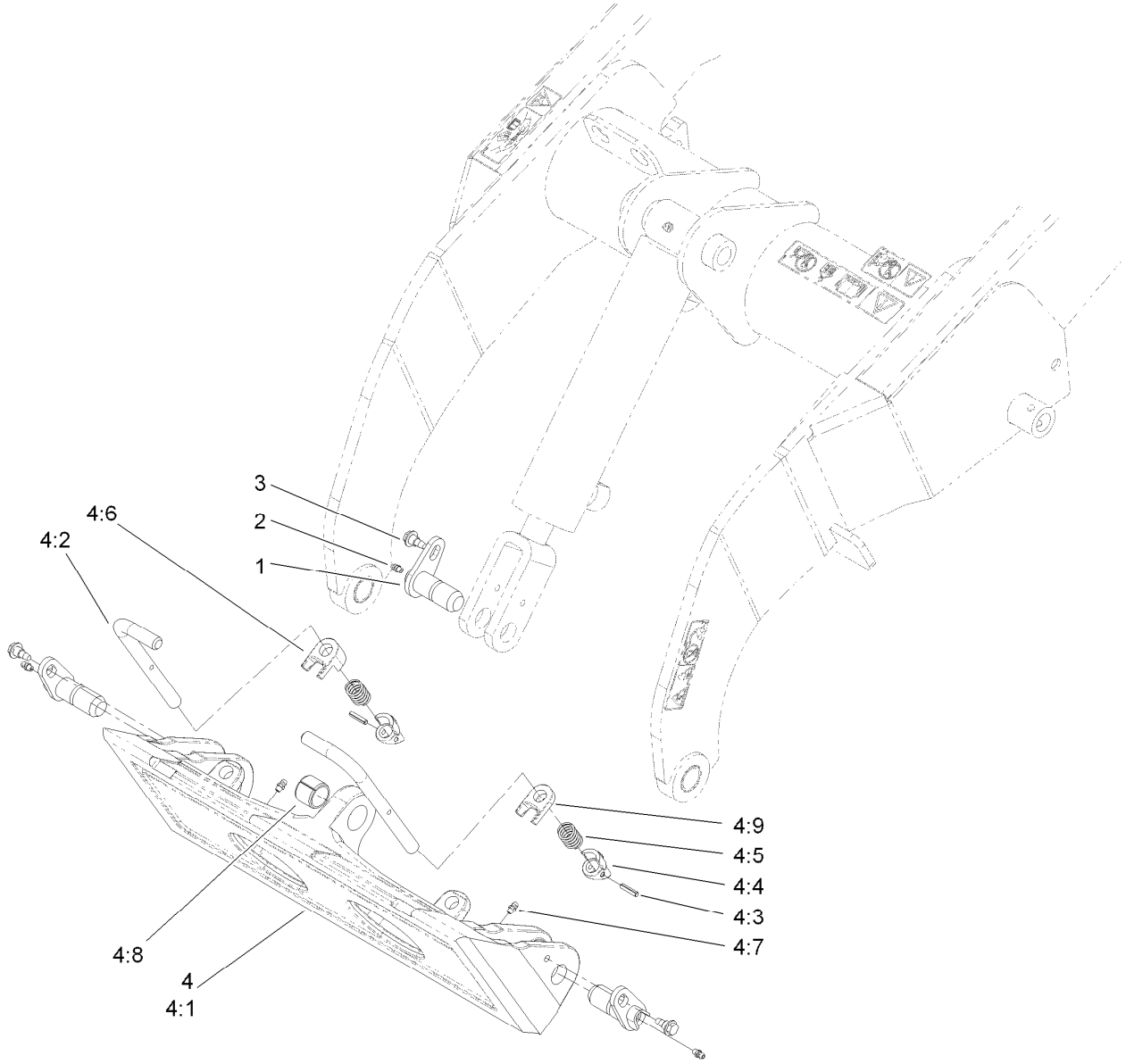


# Quick Attach Assembly

| *Ref.* | *Part Number* | *Qty.* | *Description* |
|---|---|---|---|
| 1 | 112-2609 | 3 | Pin-Pivot |
| 2 | 302-5 | 3 | Fitting-Grease |
| 3 | 99-5105 | 3 | Screw-Shoulder |
| 4 | 115-0788 | 1 | Quick Attach ASM |
| 4:1 | 115-0774-03 | 1 | Mount-Qtach |
| 4:2 | 105-8367 | 2 | Pin-Locking |
| 4:3 | 3285-1 | 2 | Pin-Grooved |
| 4:4 | 105-0246 | 2 | Cam |
| 4:5 | 98-4694 | 2 | Spring-Compression |
| 4:6 | 104-5909 | 1 | Stop-RH |
| 4:7 | 302-5 | 2 | Fitting-Grease |
| 4:8 | 98-4871 | 1 | Bushing-Tension |
| 4:9 | 104-5903 | 1 | Stop-LH |

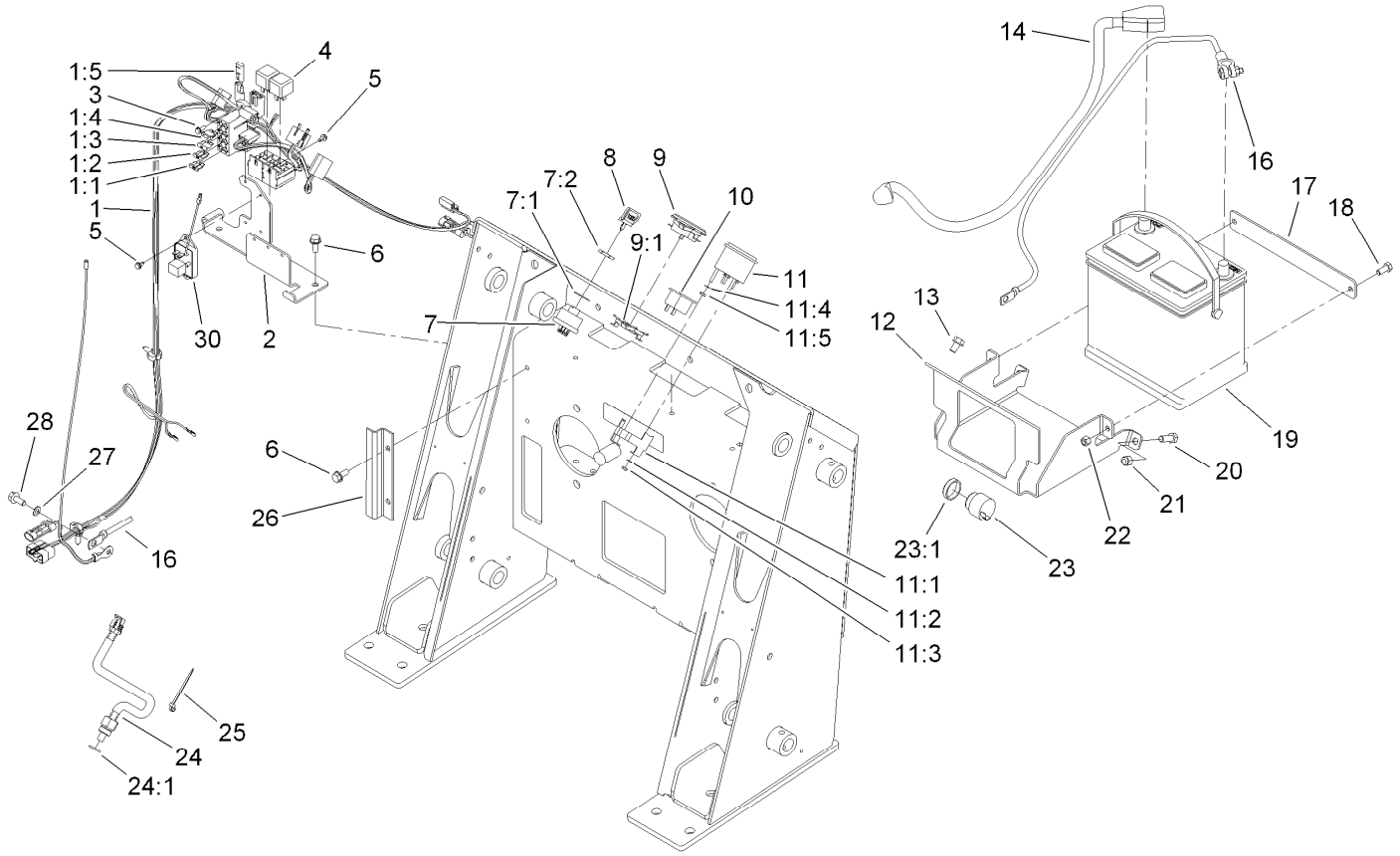


# Electrical System Assembly

| Ref. | Part Number | Qty. | Description |
|---|---|---|---|
| 1 | 117-1732 | 1 | Harness-Wire |
| 1:1 | 109103 | 1 | Fuse-Blade, 30 Amp |
| 1:2 | 109102 | 1 | Fuse-Blade, 25 Amp |
| 1:3 | 218-578 | 1 | Fuse-Blade, 10 Amp |
| 1:4 | 109355 | 2 | Fuse-Blade, 15 Amp |
| 1:5 | 116-0053 | 1 | Cap-Plug |
| 2 | 117-1735-03 | 1 | Bracket-Fuse/Relay |
| 3 | 32104-4 | 2 | Screw |
| 4 | 98-7249 | 2 | Relay |
| 5 | 104-2065 | 4 | Screw-HWH |
| 6 | 32144-11 | 4 | Screw-HWH |
| 7 | 88-9830 | 1 | Key Switch ASM |
| 7:1 | 3254-5 | 1 | Washer-Lock |
| 7:2 | 218-461 | 1 | Nut-HH |
| 8 | 63-8360 | 3 | Key-Ignition |
| 9 | 104-7427 | 1 | Inductive Hourmeter ASM |
| 9:1 | 104-4234 | 1 | Clip-Mounting |
| 10 | 104-2839 | 1 | Light-Temp, Oil |
| 11 | 66-2940 | 1 | Gauge-Fuel |
| 11:1 | 100-6147 | 1 | Bracket-Mounting, Gauge |
| 11:2 | 3254-1 | 2 | Washer-Lock, Int |
| 11:3 | 3217-27 | 2 | Nut-Hex |
| 11:4 | 3255-24 | 3 | Washer-Lock / EXT |
| 11:5 | 3217-16 | 3 | Nut-Hex |
| 12 | 106-9390-01 | 1 | Tray-Mounting, Battery |
| 13 | 32144-69 | 2 | Screw-HWHTF |
| 14 | 106-5707 | 1 | Cable-Battery, Positive |
| 16 | 106-5708 | 1 | Cable-Battery, Negative |
| 17 | 105-0371-01 | 1 | Clamp-Battery |
| 18 | 322-3 | 2 | Screw-HH |
| 19 | 104-9979 | 1 | Battery |
| 20 | 323-6 | 2 | Screw-HH |
| 21 | 3296-39 | 2 | Nut-Lock, NI |
| 22 | 3296-29 | 2 | Nut-Lock, NI |
| 23 | 80-9330 | 1 | Audio Alarm ASM |
| 23:1 | 104-5107 | 1 | Nut-Plastic, Knurled |
| 24 | 98-2765 | 1 | Switch-Temperature |
| 24:1 | 237-79 | 1 | O-Ring |
| 25 | 3290-381 | 3 | Tie-Cable |
| 26 | 100-6117-01 | 1 | Shield-Wiring |
| 27 | 3255-8 | 1 | Washer-Lock |
| 28 | 33104-016 | 1 | Screw-HHF |
| 30 | 99-7422 | 1 | Module-Delay, Ignition |

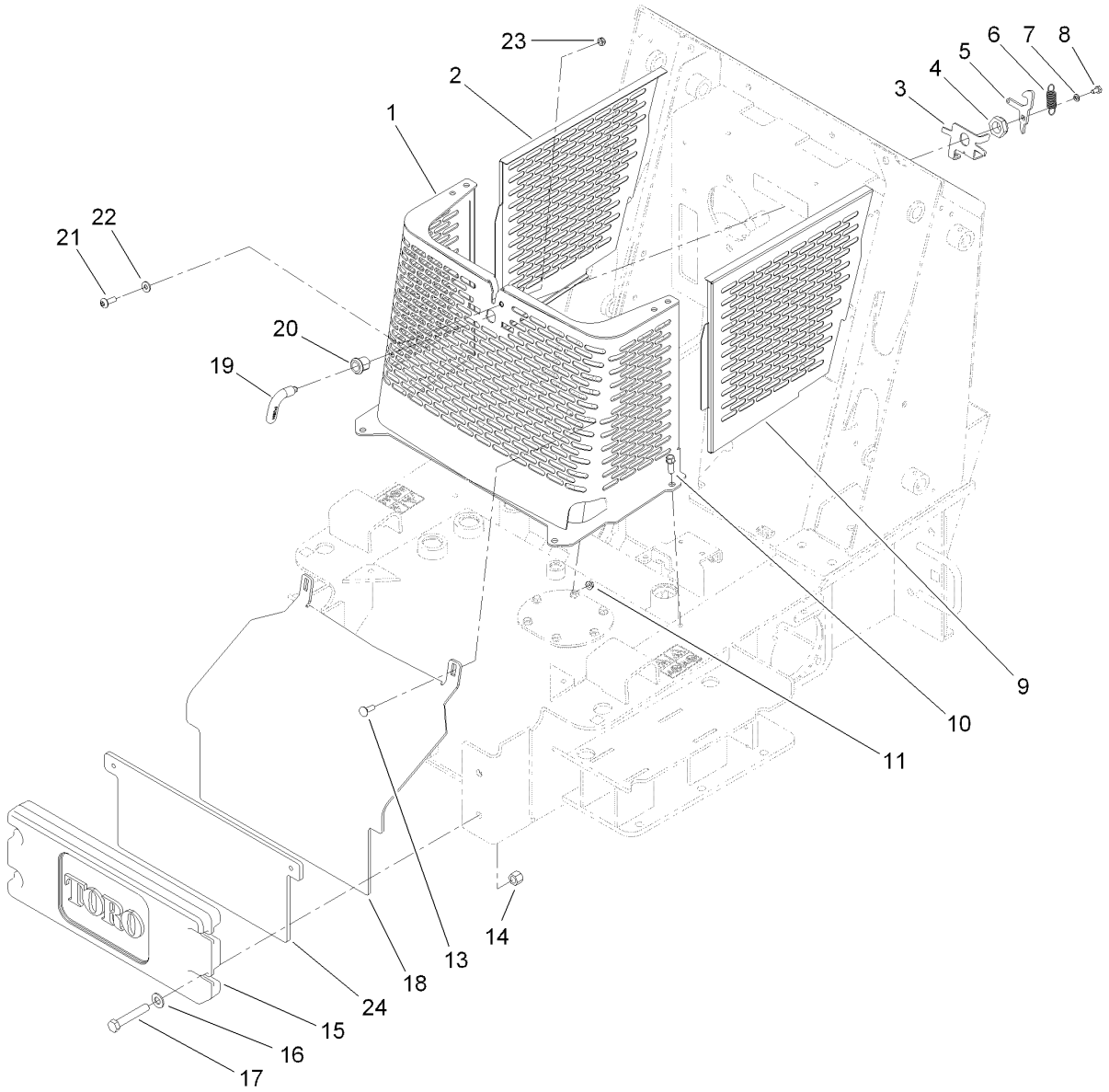


# Grill Assembly

| Ref. | Part Number | Qty. | Description |
|---|---|---|---|
| 1 | 117-9998-03 | 1 | Grill |
| 2 | 106-5727-03 | 1 | Panel-Side, RH |
| 3 | 106-5729-03 | 1 | Bracket-Latch |
| 4 | 3296-60 | 1 | Nut-Lock, NI |
| 5 | 106-5728 | 1 | Cam-Latch |
| 6 | 104-0869 | 1 | Spring |
| 7 | 3253-3 | 1 | Washer-Lock |
| 8 | 321-2 | 1 | Screw-HH |
| 9 | 106-5726-03 | 1 | Panel-Side, LH |
| 10 | 95-1726 | 4 | Screw-Taptite |
| 11 | 32128-20 | 2 | Nut-HF |
| 13 | 3230-28 | 2 | Screw-CARR |

| Ref. | Part Number | Qty. | Description |
|---|---|---|---|
| 14 | 3296-23 | 4 | Nut-Lock, NI |
| 15 | 99-6166-01 | 1 | Counterweight-Front |
| 16 | 3256-26 | 4 | Washer-Flat |
| 17 | 325-12 | 4 | Screw-HH |
| 18 | 117-9994-03 | 1 | Plate-Front |
| 19 | 108-5639 | 1 | Handle-Latch |
| 20 | 106-9335 | 1 | Housing-Latch |
| 21 | 107-8021 | 1 | Screw-PTH |
| 22 | 3256-2 | 1 | Washer-Flat |
| 23 | 3296-47 | 1 | Nut-Lock,NI |
| 24 | 117-9995-03 | 1 | Plate-Counterweight |

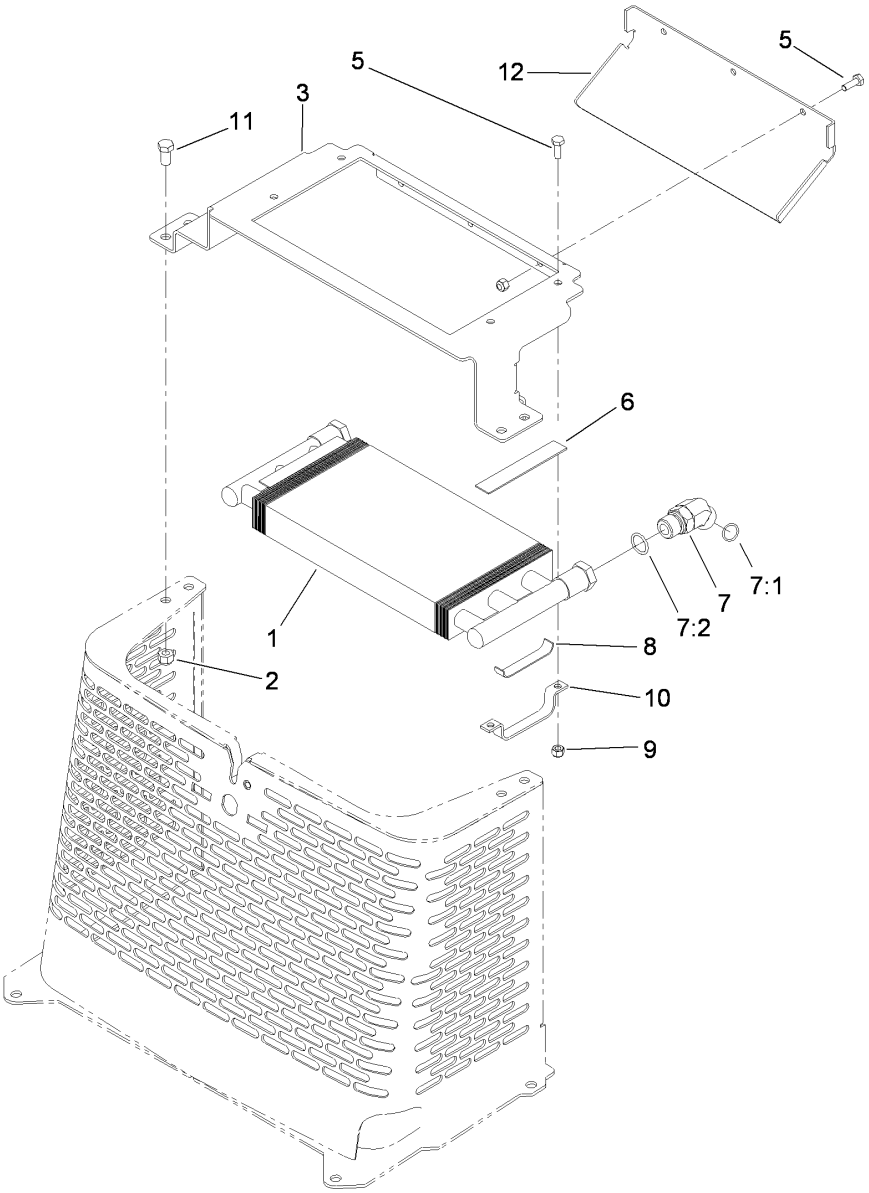


# Hydraulic Oil Cooler Assembly

| *Ref.* | *Part Number* | *Qty.* | *Description* |
|---|---|---|---|
| 1 | 105-0352 | 1 | Exchanger-Heat |
| 2 | 3296-39 | 4 | Nut-Lock, NI |
| 3 | 120-5360-03 | 1 | Bracket-Mounting, Cooler |
| 5 | 321-4 | 7 | Screw-HH |
| 6 | 94-9566 | 2 | Pad-Footrest |
| 7 | 340-14 | 2 | Fitting-HYD, 45 DEG |
| 7:1 | 237-65 | 1 | O-Ring |
| 7:2 | 237-80 | 1 | O-Ring |
| 8 | 104-2816 | 2 | Pad-Support |
| 9 | 3296-42 | 7 | Nut-Lock, NI |
| 10 | 104-2803 | 2 | Support-Cooler |
| 11 | 3234-42 | 4 | Screw-HHF |
| 12 | 115-0798-03 | 1 | Deflector-Cooler |

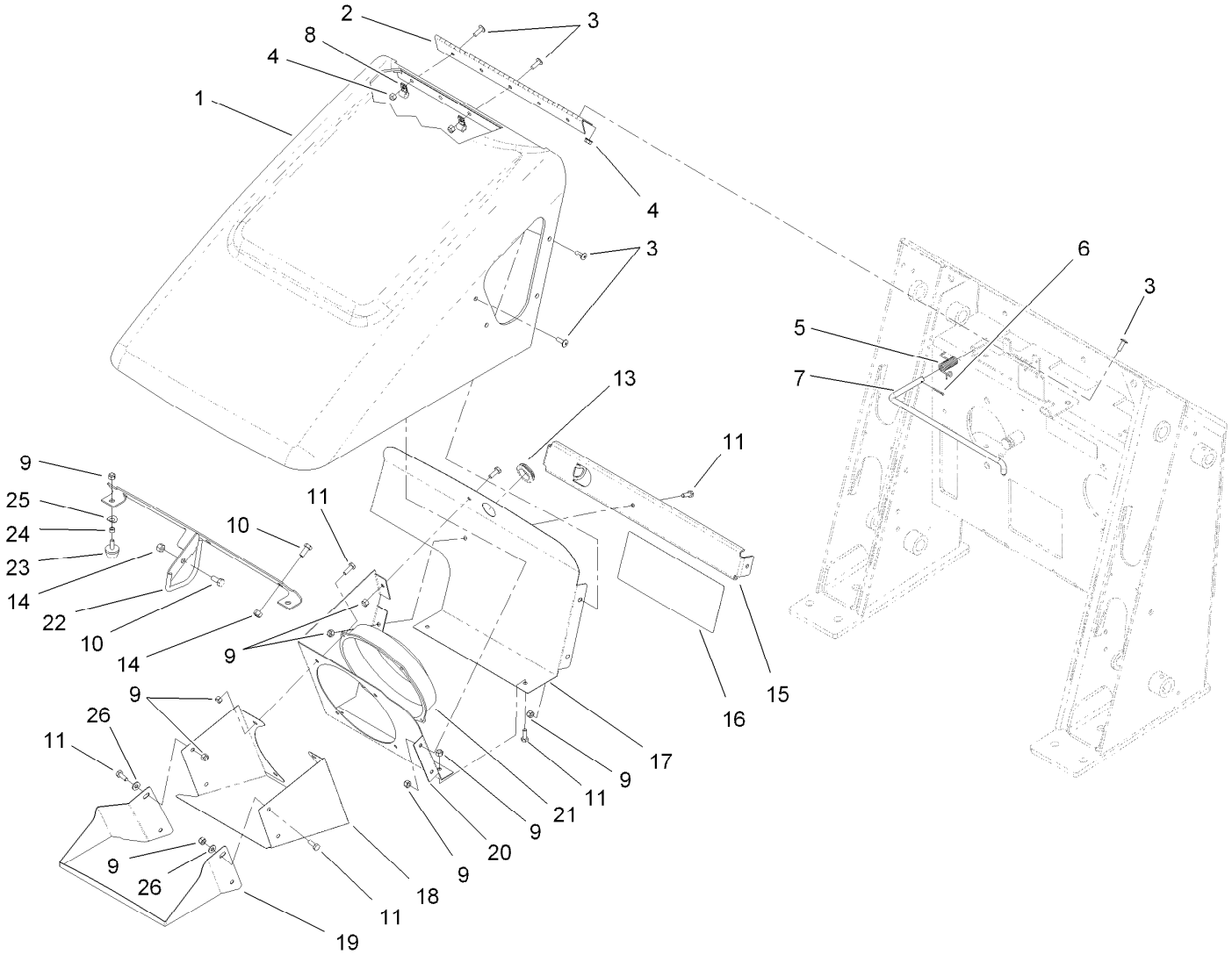


# Hood Assembly

| Ref. | Part Number | Qty. | Description |
|---|---|---|---|
| 1 | 114-1363 | 1 | Hood |
| 2 | 100-1284 | 1 | Hinge-Hood |
| 3 | 9114604 | 14 | Screw-Head, Truss |
| 4 | 32128-33 | 6 | Nut-HF |
| 5 | 106-2584 | 1 | Spring-Torsion |
| 6 | 3272-6 | 1 | Pin-Cotter |
| 7 | 106-2554 | 1 | Rod-Support, Hood |
| 8 | 2412-91 | 2 | Clamp |
| 9 | 3296-42 | 22 | Nut-Lock, NI |
| 10 | 322-3 | 4 | Screw-HH |
| 11 | 321-4 | 12 | Screw-HH |
| 13 | 240-5 | 1 | Grommet |
| 14 | 3296-29 | 4 | Nut-Lock, NI |

| Ref. | Part Number | Qty. | Description |
|---|---|---|---|
| 15 | 115-4849-03 | 1 | Bracket-Support, Hood |
| 16 | 117-1806 | 1 | Decal-Service |
| 17 | 114-8715-03 | 1 | Bracket-Fan, Back |
| 18 | 114-8711-03 | 1 | Shroud-Fan |
| 19 | 114-8712-03 | 1 | Shroud-Fan, Front |
| 20 | 114-8714-03 | 1 | Bracket-Fan, Back |
| 21 | 104-2809 | 1 | Fan |
| 22 | 117-1725-03 | 1 | Latch-Rod |
| 23 | 1-523420 | 2 | Bumper |
| 24 | 106-9308 | 2 | Spacer |
| 25 | 3290-301 | 2 | Washer-Spring |
| 26 | 3256-22 | 2 | Washer-Flat |

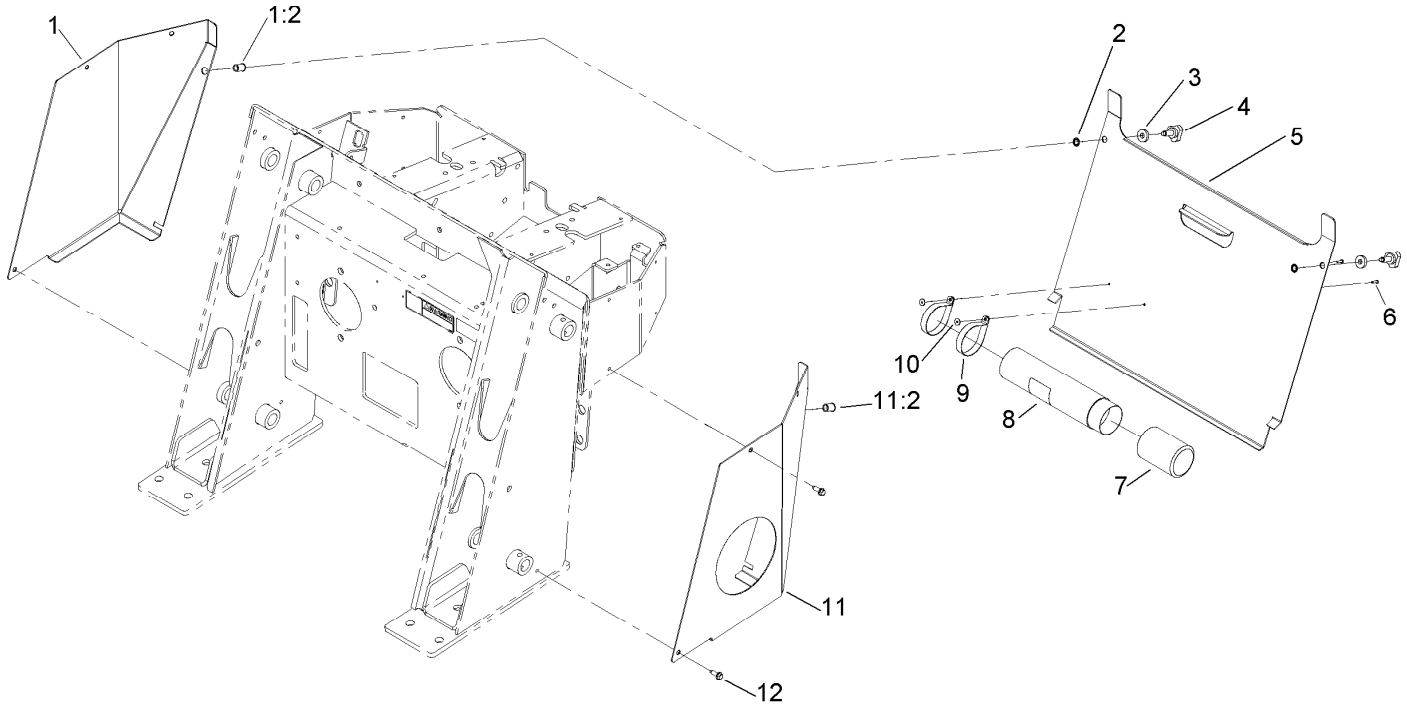


# Rear Access Cover Assembly

| *Ref.* | *Part Number* | *Qty.* | *Description* |
|---|---|---|---|
| 1 | 106-9342 | 1 | RH Rear Cover Support ASM |
| 1:2 | 32148-9 | 1 | Nut-Clinch |
| 2 | 32151-72 | 2 | Ring-Retaining |
| 3 | 106-0565 | 2 | Washer-Rubber |
| 4 | 95-9648 | 2 | Knob |
| 5 | 106-9339-01 | 1 | Cover-Access, Rear |
| 6 | 3269-17 | 2 | Rivet-Pop |
| 7 | 104-7048 | 1 | Cap-Housing |
| 8 | 104-7050 | 1 | Tube-Manual |
| 9 | 2412-120 | 2 | Clamp-R |
| 10 | 3269-10 | 2 | Washer-Back |
| 11 | 106-9343 | 1 | LH Rear Cover Support ASM |
| 11:2 | 32148-9 | 1 | Nut-Clinch |
| 12 | 9266714 | 6 | Screw-HWH |

# Attachments and Accessories

## For 22321 TX 427 Compact Utility Loader

| Product Name | Model/Part |
|---|---|
| Light Kit | 100-8840 |
| Track Kit | 104-6106 |
| Road Wheel Kit | 106-7620 |
| Reference Guide Kit | 107-9310 |
| Track-Aggressive Tread | 108-5640 |
| 4 Cubic Foot Standard Bucket | 22409 |
| Loose Materials Bucket | 22410 |
| 48in Hydraulic Blade | 22414 |
| Rotary Broom | 22415 |
| Bore Drive Head | 22420 |
| Rod and Reamer | 22421 |
| Multi-Purpose Tool | 22423 |
| Power Box Rake | 22425 |
| Stump Grinder | 22429 |
| Tree Forks | 22438 |
| Cement Bowl | 22442 |
| 40in Tiller | 22445 |
| Snowthrower | 22456 |
| Crumber Kit | 22464 |
| Trencher Head | 22470 |
| High-Speed Trencher Head | 22471 |
| Trench Filler | 22472 |
| TX Platform | 22475 |
| Narrow Bucket | 22520 |
| Grapple Rake | 22521 |
| Auger Head | 22805 |
| Universal Swivel Auger Head | 22806 |
| Vibratory Plow | 22911 |
| Soil Cultivator | 23101 |
| Concrete Breaker | 23135 |
| Backhoe Fitup Kit | 23162 |
| Backhoe | 23163 |
| Adjustable Forks | 23164 |
| Leveler | 23165 |
| Spark Arrestor Screen | 75-6880 |

**Notes:**

**Notes:**

**Notes:**

TORO®

Count on it.