Form No. 3361-443 Rev B

TORO®

Count on it.

Parts Catalog

# TX 427 Wide Track

## Compact Utility Loader

**Model No. 22322—Serial No. 290000001 and Up**

Register at www.Toro.com.
Original Instructions (EN)

CE

*3361-443* B

# Ordering Replacement Parts

To order replacement parts, please supply the part number, the quantity, and the description of each part desired.

### Understanding Reference Numbers

Each identified part in an illustration has a reference number. The reference number for a part also appears in the parts list, along with other information about the part.

This catalog uses two special reference number formats, one to indicate parts in a service assembly and another to indicate the quantity of a given part in an illustration.

### Service Assembly Reference Numbers

Parts in service assemblies have reference numbers in the form a:b. The a represents the reference number of the entire service assembly and the b represents a sequential number unique to each part within the service assembly.

For example, a wheel assembly might be identified by reference number 6, the tire by 6:1, the valve by 6:2, and the wheel by 6:3. When you order the assembly identified by reference number 6, you receive all parts identified by reference numbers 6:1,6:2, and 6:3. However, you may also order any part individually. Reference numbers of this type appear in illustration and in parts lists.

### Reference Numbers Indicating Quantity

In an illustration, if a reference number indicates more than one part, the reference number has the form nX y. The n represents the quantity of the part, the X is the multiplication symbol, and the y represents the reference number.

For example, in an illustration, the reference number 2X 37 means that two of the parts identified by reference number 37 are indicated.

# Contents

Main Frame and Fuel Tank Assembly . . . 4
Track and Traction Assembly . . . 5
Parking Brake Assembly . . . 6
Loader Tower and Pulley Assembly . . . 7
Traction Hydraulic Assembly . . . 8
Hydraulic Pump Assembly No. 106-5705 and 106-5706 . . . 9
Hydraulic Motor Assembly No. 114-1756 . . . 10
Engine and Mount Assembly . . . 11
Air Cleaner Assembly No. 99-3160 . . . 13
Hydraulic Pump and Filter Assembly . . . 14
Hydraulic Gear Pump Assembly No. 106-7650 . . . 15
Control Panel Assembly . . . 16
Traction Control Assembly . . . 17
Principal Hydraulic Assembly . . . 18
Two Spool Valve Assembly No. 106-9307 . . . 20
One Spool Valve Assembly No. 104-2831 . . . 21
Loader Arm Assembly . . . 22
Loader Arm Hydraulic Assembly . . . 23
Left Hand Hydraulic Lift Cylinder Assembly No. 104-6267 . . . 24
Right Hand Hydraulic Lift Cylinder Assembly No. 104-6269 . . . 25
Hydraulic Cylinder Assembly No. 105-8370 . . . 26
Quick Attach Assembly . . . 27
Electrical System Assembly . . . 28
Grill Assembly . . . 29
Hydraulic Oil Cooler Assembly . . . 30
Hood Assembly . . . 31
Rear Access Cover Assembly . . . 32
Crankshaft Assembly Kohler CH740-3126 . . . 33
Crankcase Assembly Kohler CH740-3126 . . . 34
Oil Pan and Lubrication Assembly Kohler CH740-3126 . . . 35
Head, Valve and Breather Assembly Kohler CH740-3126 . . . 37
Ignition and Electrical Assembly Kohler CH740-3126 . . . 39
Blower Housing and Baffle Assembly Kohler CH740-3126 . . . 40
Starting System Assembly Kohler CH740-3126 . . . 41
Fuel System Assembly Kohler CH740-3126 . . . 42
Engine Control Assembly Kohler CH740-3126 . . . 43
Air Intake and Filtration Assembly Kohler CH740-3126 . . . 44
Exhaust Assembly Kohler CH740-3126 . . . 45
Decal Set Kohler CH740-3126 . . . 46
Attachments and Accessories . . . 47

**© 2023—The Toro® Company**
**8111 Lyndale Avenue South**
**Bloomington, MN 55420**



**Contact us at www.Toro.com.**
**Printed in the USA.**
**All Rights Reserved**

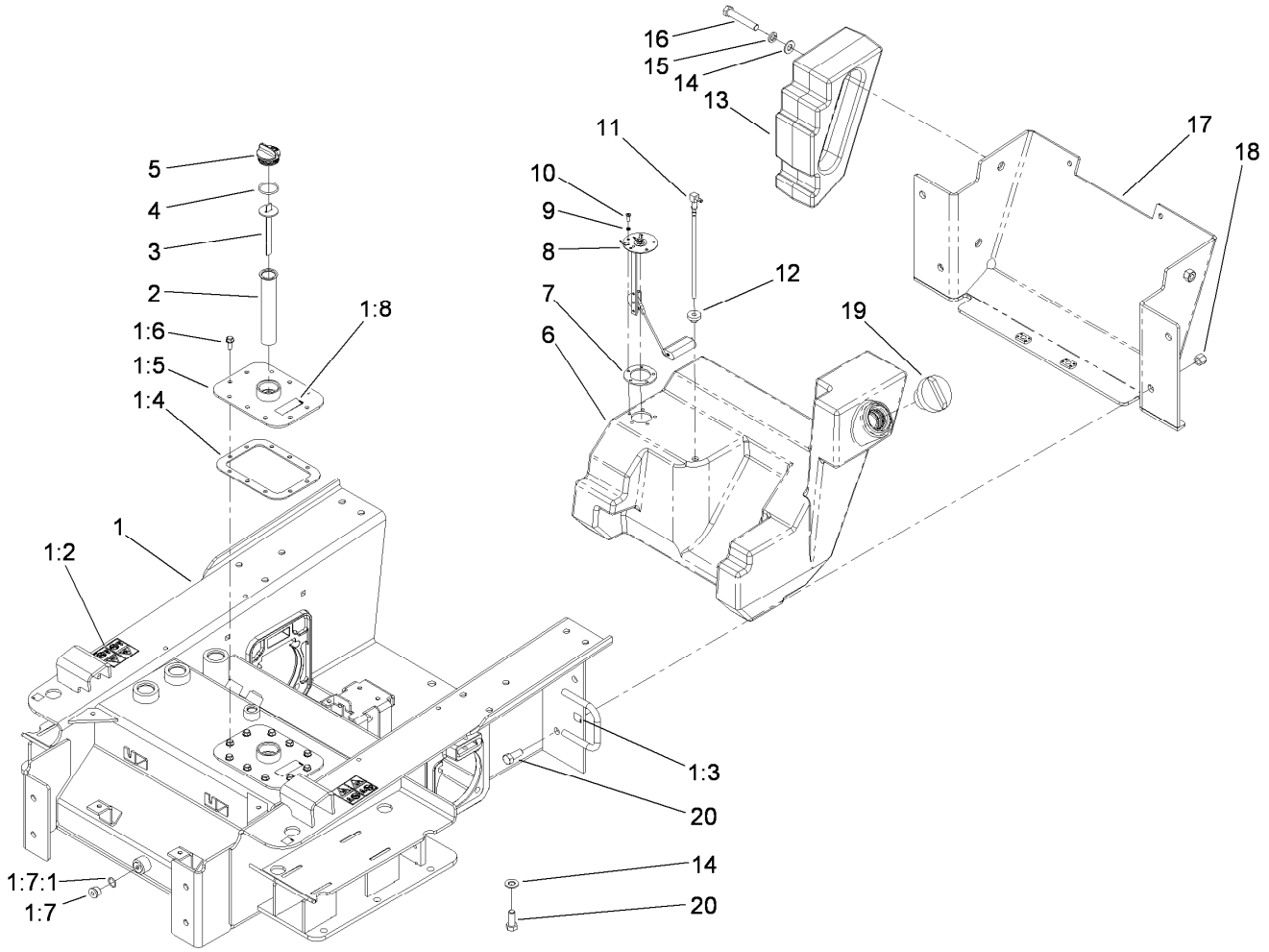


# Main Frame and Fuel Tank Assembly

| Ref. | Part Number | Qty. | Description |
|---|---|---|---|
| 1 | 115-4846 | 1 | Chassis ASM |
| 1:2 | 100-4650 | 2 | Decal-Warning |
| 1:3 | 93-9084 | 4 | Decal-Point, Lift |
| 1:4 | 100-1253 | 1 | Gasket-Cover, Access |
| 1:5 | 104-8389-01 | 1 | Tank Cover ASM |
| 1:6 | 98-9940 | 10 | Screw-HHF |
| 1:7 | 353-988 | 2 | Plug-Hex |
| 1:7:1 | 237-79 | 1 | O-Ring |
| 1:8 | 93-6686 | 1 | Decal-Oil, HYD |
| 2 | 61-2790 | 1 | Filter-Screen |
| 3 | 100-2097 | 1 | Dipstick-Oil |
| 4 | 237-123 | 1 | O-Ring |
| 5 | 93-7498 | 1 | Plug-Plastic |
| 6 | 115-0799 | 1 | Tank-Fuel |

| Ref. | Part Number | Qty. | Description |
|---|---|---|---|
| 7 | 113372 | 1 | Gasket-Sender, Fuel |
| 8 | 100-1298 | 1 | Sender-Fuel |
| 9 | 3253-17 | 5 | Washer-Lock |
| 10 | 3250-31 | 5 | Screw-PPH |
| 11 | 98-0185 | 1 | Pipe-Stand |
| 12 | 46-6560 | 1 | Bushing |
| 13 | 99-6165-01 | 2 | Counterweight-Rear |
| 14 | 3256-26 | 6 | Washer-Flat |
| 15 | 3253-7 | 4 | Washer-Lock |
| 16 | 325-12 | 4 | Screw-HH |
| 17 | 115-4565-01 | 1 | Cover-Rear |
| 18 | 3296-23 | 4 | Nut-Lock, NI |
| 19 | 115-5304 | 1 | Cap-Fuel |
| 20 | 325-5 | 6 | Screw-HH |

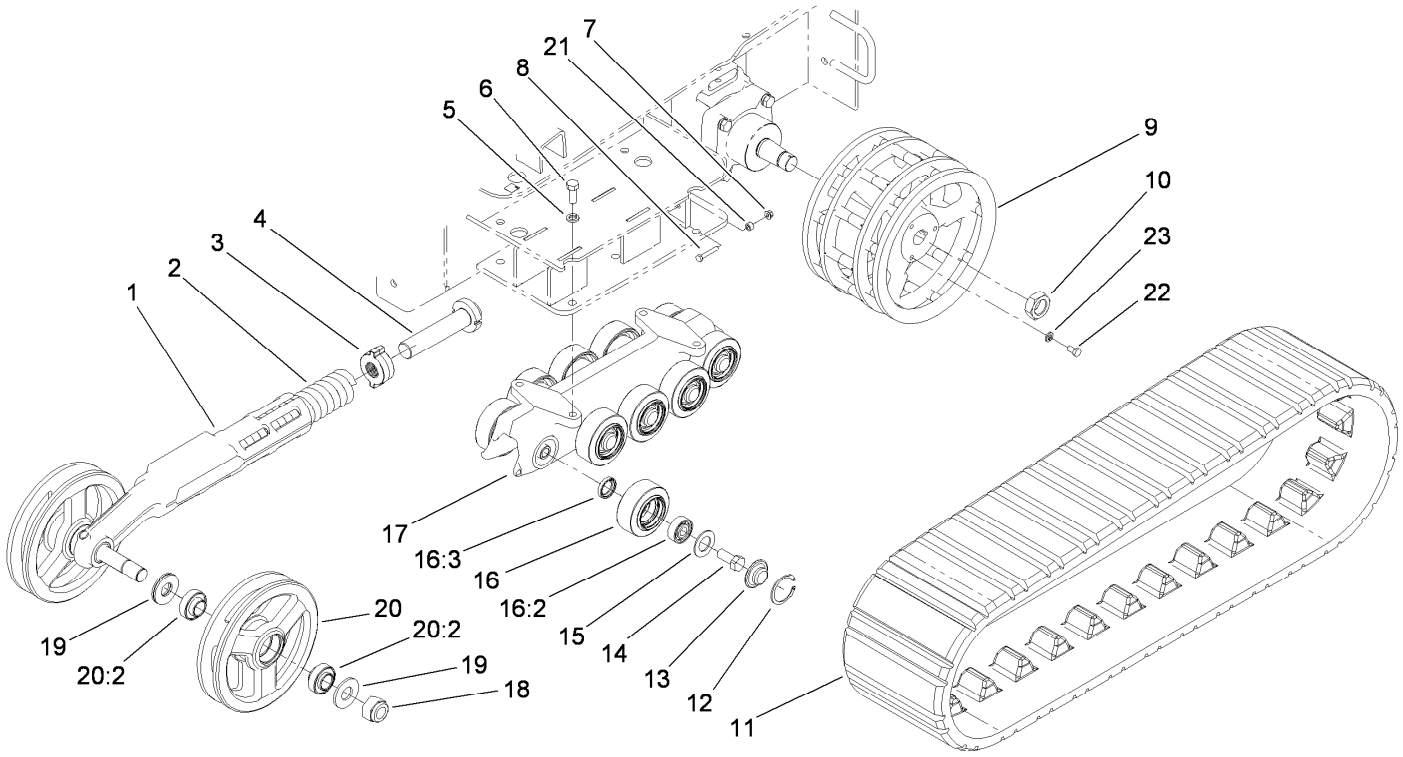


# Track and Traction Assembly

| Ref. | Part Number | Qty. | Description |
|---|---|---|---|
| 1 | 115-0717-03 | 2 | Arm-Tensioner |
| 2 | 95-3624 | 2 | Spring-Compression |
| 3 | 108-4664 | 2 | Block-Tensioner |
| 4 | 98-9846 | 2 | Bolt-Tensioner |
| 5 | 3253-7 | 8 | Washer-Lock |
| 6 | 325-5 | 8 | Screw-HH |
| 7 | 32128-32 | 2 | Nut-HHF |
| 8 | 321-37 | 2 | Screw-HH |
| 9 | 115-0721-03 | 2 | Wheel-Drive |
| 10 | 107-9319 | 2 | Nut-Hex |
| 11 | 100-8931 | 2 | Track |
| 12 | 106-7595 | 20 | Ring-Snap, Internal |
| 13 | 106-7557 | 20 | Cap-Wheel, Bearing |

| Ref. | Part Number | Qty. | Description |
|---|---|---|---|
| 14 | 327-4 | 20 | Screw-HH |
| 15 | 106-7585 | 20 | Gasket-Bogie |
| 16 | 106-7621 | 20 | Road Wheel ASM |
| 16:2 | 93-4237 | 1 | Bearing |
| 16:3 | 253-118 | 1 | Seal-Oil |
| 17 | 106-7592-03 | 2 | Guide-Track |
| 18 | 104-2024 | 4 | Nut-Hex, NI |
| 19 | 115-0722 | 8 | Washer-Plain |
| 20 | 104-6123 | 4 | Tensioner Wheel ASM |
| 20:2 | 104-6129 | 2 | Bearing-Ball |
| 21 | 98-4799 | 2 | Spacer |
| 22 | 323-34 | 6 | Screw-HH |
| 23 | 3253-21 | 6 | Washer-Lock |

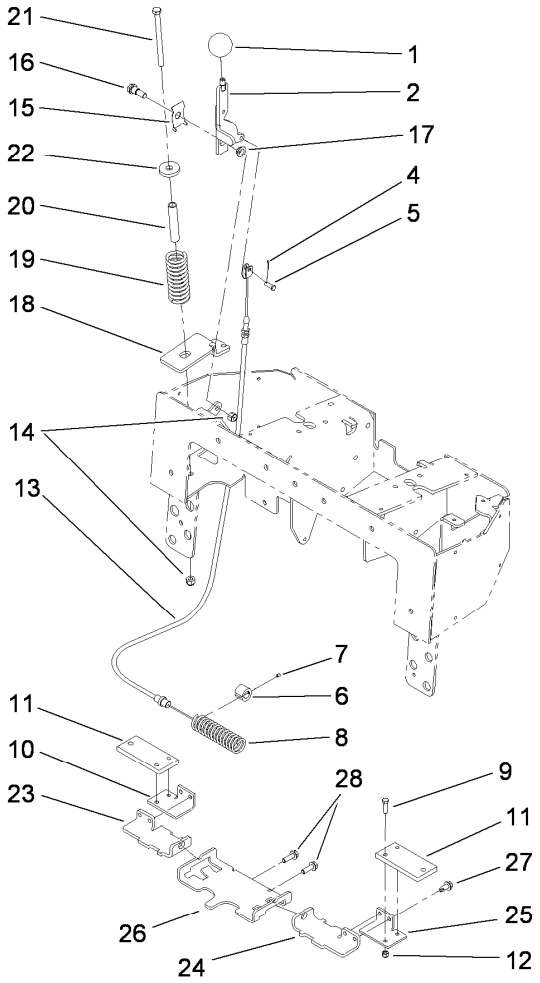


# Parking Brake Assembly

| Ref. | Part Number | Qty. | Description |
|---|---|---|---|
| 1 | 233-21 | 1 | Knob |
| 2 | 112-2694-03 | 1 | Handle-Brake |
| 4 | 3272-1 | 1 | Pin-Cotter |
| 5 | 283-67 | 1 | Pin-Clevis |
| 6 | 100-6274 | 2 | Tube-Guide |
| 7 | 3245-20 | 2 | Screw-Set |
| 8 | 100-1678 | 1 | Spring |
| 9 | 321-6 | 4 | Screw-HH |
| 10 | 112-2789-03 | 1 | Bar-Link, Brake RH |
| 11 | 112-2735-03 | 2 | Plate-Brake |
| 12 | 3296-42 | 4 | Nut-Lock, NI |
| 13 | 112-2791 | 1 | Cable-Brake |
| 14 | 3296-39 | 2 | Nut-Lock, NI |
| 15 | 112-2695 | 1 | Spring-Leaf |
| 16 | 94-6177 | 1 | Bolt-Shoulder |
| 17 | 93-2368 | 1 | Bushing-Flange |
| 18 | 115-4854-03 | 1 | Bracket-Cable, Spring |
| 19 | 114-1254 | 1 | Spring-Compression |
| 20 | 114-1255 | 1 | Spacer-Spring |
| 21 | 323-21 | 1 | Screw-HH |
| 22 | 98-0691 | 1 | Washer-Hardened |
| 23 | 112-2788-03 | 1 | Bracket-Mounting, Brake RH |
| 24 | 112-2733-03 | 1 | Bracket-Mounting, Brake LH |
| 25 | 112-2734-03 | 1 | Bar-Link, Brake LH |
| 26 | 110-0224-03 | 1 | Support-Bar, Brake |
| 27 | 32104-32 | 4 | Screw-HWH |
| 28 | 3234-17 | 2 | Screw-HHF |

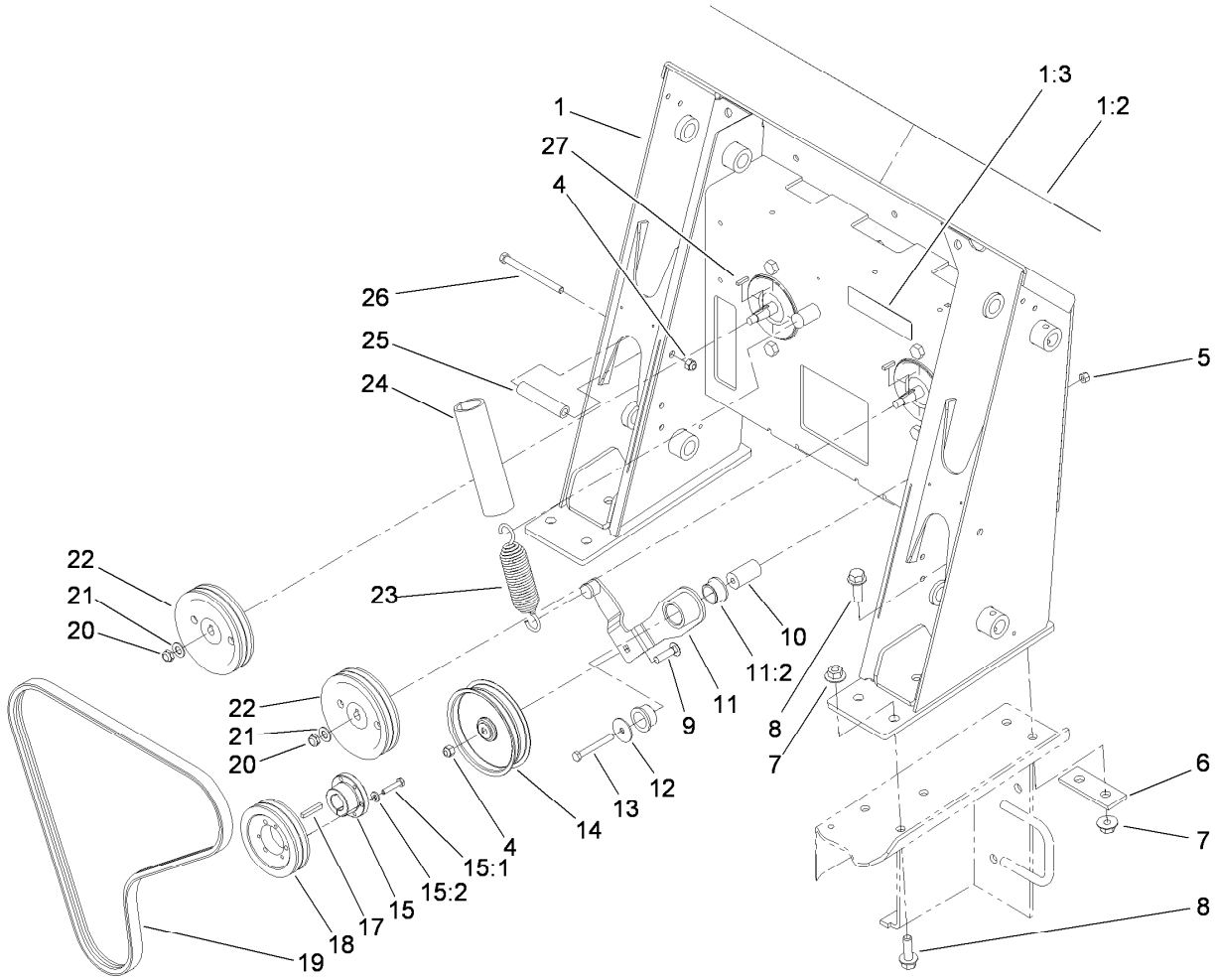


# Loader Tower and Pulley Assembly

| Ref. | Part Number | Qty. | Description |
|---|---|---|---|
| 1 | 115-0758 | 1 | Loader Tower ASM |
| 1:2 | 117-4045 | 1 | Decal-Panel, Control |
| 1:3 | 93-7814 | 1 | Decal-Danger |
| 4 | 3296-39 | 3 | Nut-Lock, NI |
| 5 | 3296-29 | 1 | Nut-Lock, NI |
| 6 | 100-6123-01 | 2 | Plate-Stiffener |
| 7 | 32128-52 | 10 | Nut-Lock, Flange |
| 8 | 100-6116 | 10 | Screw-HHF |
| 9 | 3231-26 | 1 | Screw-CARR |
| 10 | 104-5739 | 1 | Spacer-Mounting |
| 11 | 99-6167 | 1 | Idler Arm ASM |
| 11:2 | 256-132 | 2 | Bushing-Flange |
| 12 | 3256-68 | 1 | Washer-Flat |
| 13 | 322-13 | 1 | Screw-HH |
| 14 | 95-3707 | 1 | Pulley-Idler |

| Ref. | Part Number | Qty. | Description |
|---|---|---|---|
| 15 | 61-3340 | 1 | Bushing |
| 15:1 | 321-13 | 3 | Screw-HH |
| 15:2 | 3253-2 | 3 | Washer-Lock |
| 17 | 67-7490 | 1 | Key-Square |
| 18 | 61-3330 | 1 | Pulley |
| 19 | 95-3611 | 1 | V-Belt |
| 20 | 3296-38 | 2 | Nut-Lock, NI |
| 21 | 3256-25 | 2 | Washer-Flat |
| 22 | 106-5710-03 | 2 | Pulley |
| 23 | 105-0383 | 1 | Spring-Extension |
| 24 | 112-2409 | 1 | Retainer-Spring |
| 25 | 100-1271 | 2 | Tube-Spacer |
| 26 | 323-23 | 2 | Screw-HH |
| 27 | 3-6168 | 2 | Key |

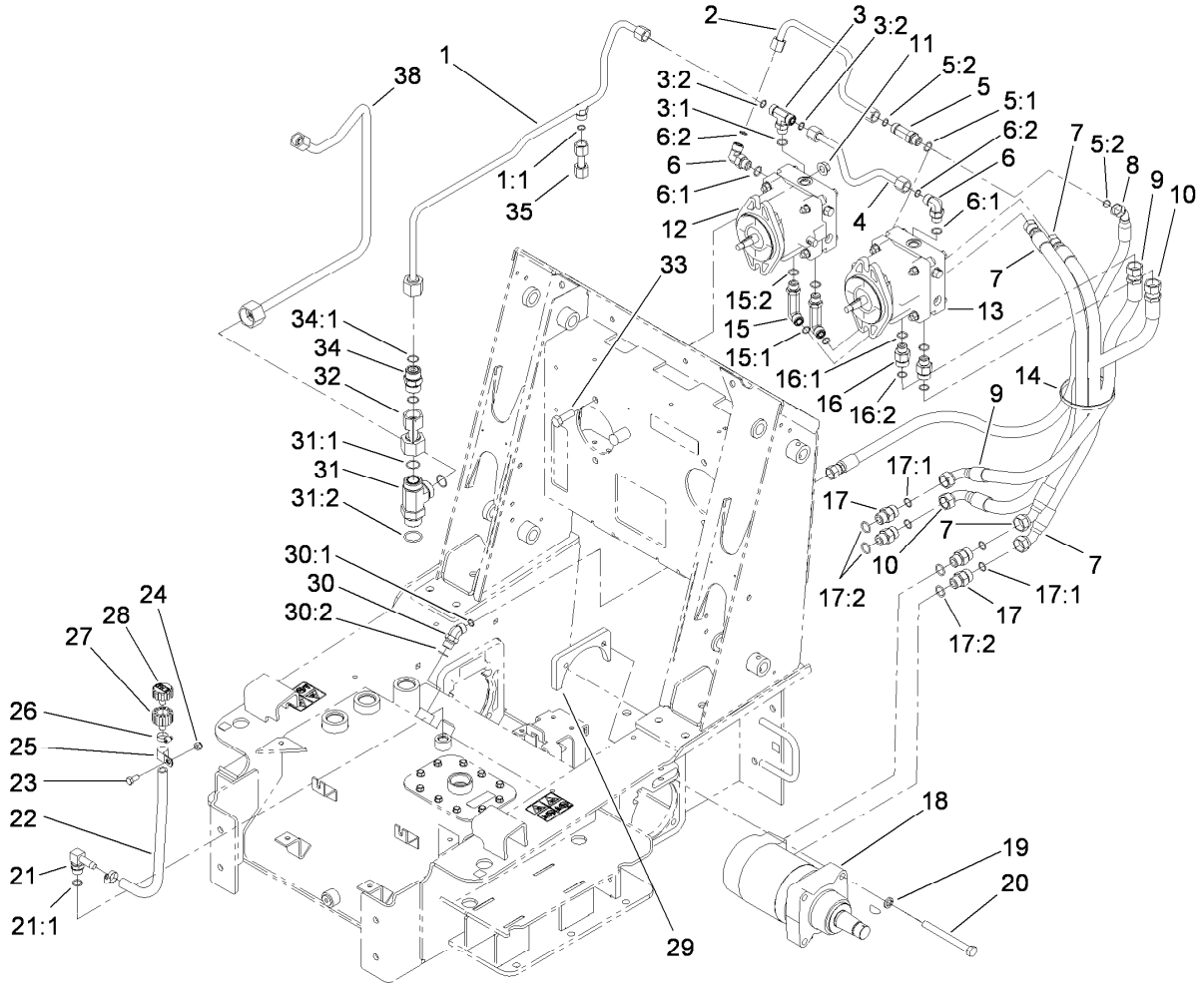


# Traction Hydraulic Assembly

| Ref. | Part Number | Qty. | Description |
|---|---|---|---|
| 1 | 108-4665 | 1 | HYD Tube ASM |
| 1:1 | 237-30 | 1 | O-Ring |
| 2 | 98-0200 | 1 | Tube-HYD |
| 3 | 340-157 | 1 | Fitting-HYD, Tee |
| 3:1 | 237-79 | 1 | O-Ring |
| 3:2 | 237-30 | 2 | O-Ring |
| 4 | 106-9330 | 1 | Tube-HYD |
| 5 | 340-109 | 1 | Fitting-Tee |
| 5:1 | 237-79 | 1 | O-Ring |
| 5:2 | 237-30 | 2 | O-Ring |
| 6 | 340-98 | 2 | Fitting-Elbow, 90 DEG |
| 6:1 | 237-79 | 1 | O-Ring |
| 6:2 | 237-30 | 1 | O-Ring |
| 7 | 98-0233 | 2 | Hose-HYD |
| 8 | 98-0201 | 1 | Hose-HYD |
| 9 | 115-4826 | 1 | Hose-HYD |
| 10 | 115-4829 | 1 | Hose-HYD |
| 11 | 32128-23 | 4 | Nut-HF |
| 12 | 106-5706 | 1 | RH HYD Pump ASM |
| 13 | 106-5705 | 1 | LH HYD Pump ASM |
| 14 | 3334-945 | 1 | Tie-Cable |
| 15 | 99-6160 | 2 | Fitting-Elbow, 90 Long |
| 15:1 | 237-30 | 1 | O-Ring |
| 15:2 | 237-79 | 1 | O-Ring |
| 16 | 340-155 | 2 | Fitting-Straight |
| 16:1 | 237-79 | 1 | O-Ring |
| 16:2 | 237-151 | 1 | O-Ring |
| 17 | 340-7 | 4 | Fitting-Straight |

| Ref. | Part Number | Qty. | Description |
|---|---|---|---|
| 17:1 | 237-65 | 1 | O-Ring |
| 17:2 | 237-80 | 1 | O-Ring |
| 18 | 114-1756 | 2 | HYD Motor ASM |
| 19 | 3253-7 | 8 | Washer-Lock |
| 20 | 115-4845 | 4 | Screw-HH, TAP |
| 21 | 354-120 | 1 | Fitting-Elbow, 90 |
| 21:1 | 237-79 | 1 | O-Ring |
| 22 | 106-5709 | 1 | Hose-Vent |
| 23 | 3234-42 | 1 | Screw-HHF |
| 24 | 3296-39 | 1 | Nut-Lock, NI |
| 25 | 2412-4 | 1 | Clamp-R |
| 26 | 2412-36 | 2 | Clamp-Hose |
| 27 | 92-8020 | 1 | Adapter-Breather |
| 28 | 68-6150 | 1 | Breather |
| 29 | 98-2763-03 | 2 | Plate-Mounting |
| 30 | 340-101 | 1 | Fitting-HYD, 45 DEG |
| 30:1 | 237-30 | 1 | O-Ring |
| 30:2 | 237-79 | 1 | O-Ring |
| 31 | 104-3795 | 1 | Fitting-Tee |
| 31:1 | 340-65 | 2 | O-Ring |
| 31:2 | 237-146 | 1 | O-Ring |
| 32 | 105-0226 | 1 | Tube-HYD |
| 33 | 325-6 | 4 | Screw-HH |
| 34 | 99-6161 | 1 | HYD Check Valve ASM |
| 34:1 | 237-58 | 2 | O-Ring |
| 35 | 108-4666 | 1 | Tube-HYD |
| 38 | 117-3988 | 1 | Tube-HYD |

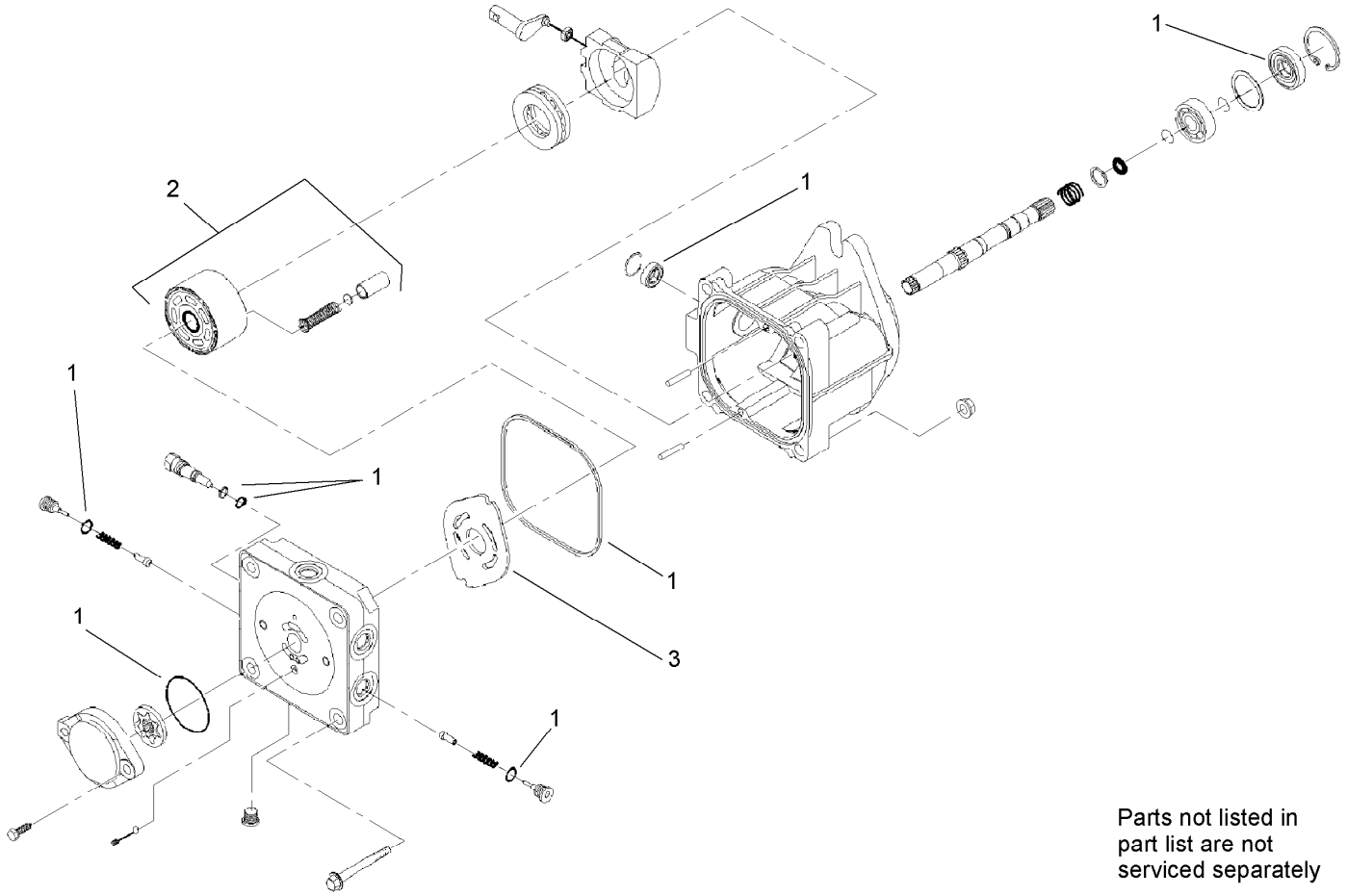


Parts not listed in part list are not serviced separately

# Hydraulic Pump Assembly No. 106-5705 and 106-5706

| *Ref.* | *Part Number* | *Qty.* | *Description* |
|---|---|---|---|
| 1 | 100-6110 | 1 | Overhaul Seal Kit |
| 2 | 94-1913 | 1 | Cylinder Block ASM |
| 3 | 100-6112 | 1 | Plate-Valve |

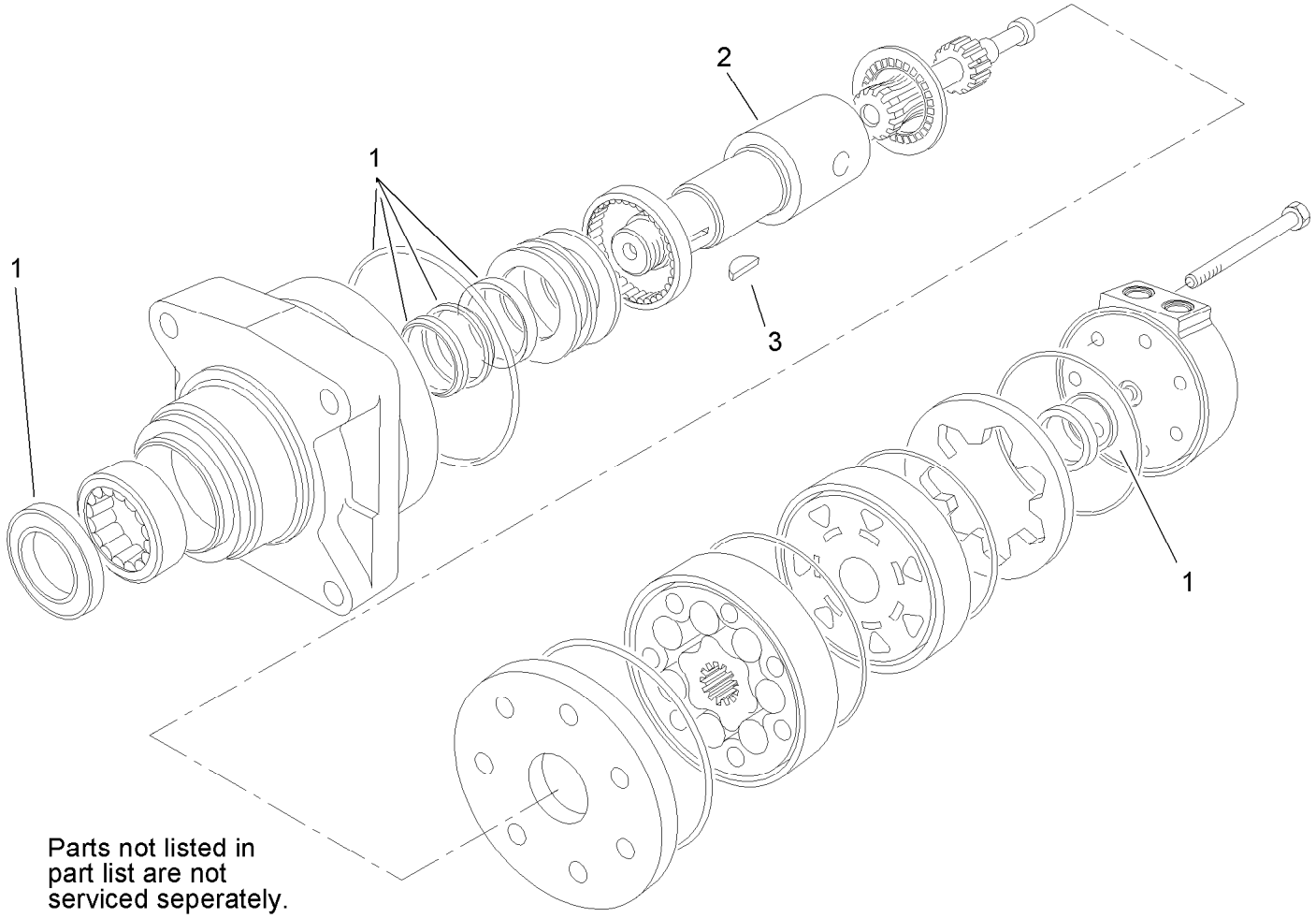


# Hydraulic Motor Assembly No. 114-1756

| *Ref.* | *Part Number* | *Qty.* | *Description* |
|---|---|---|---|
| 1 | 100-6131 | 1 | Seal Kit |
| 2 | 106-7645 | 1 | Coupling-Shaft |
| 3 | 3257-42 | 1 | Key-Woodruff |

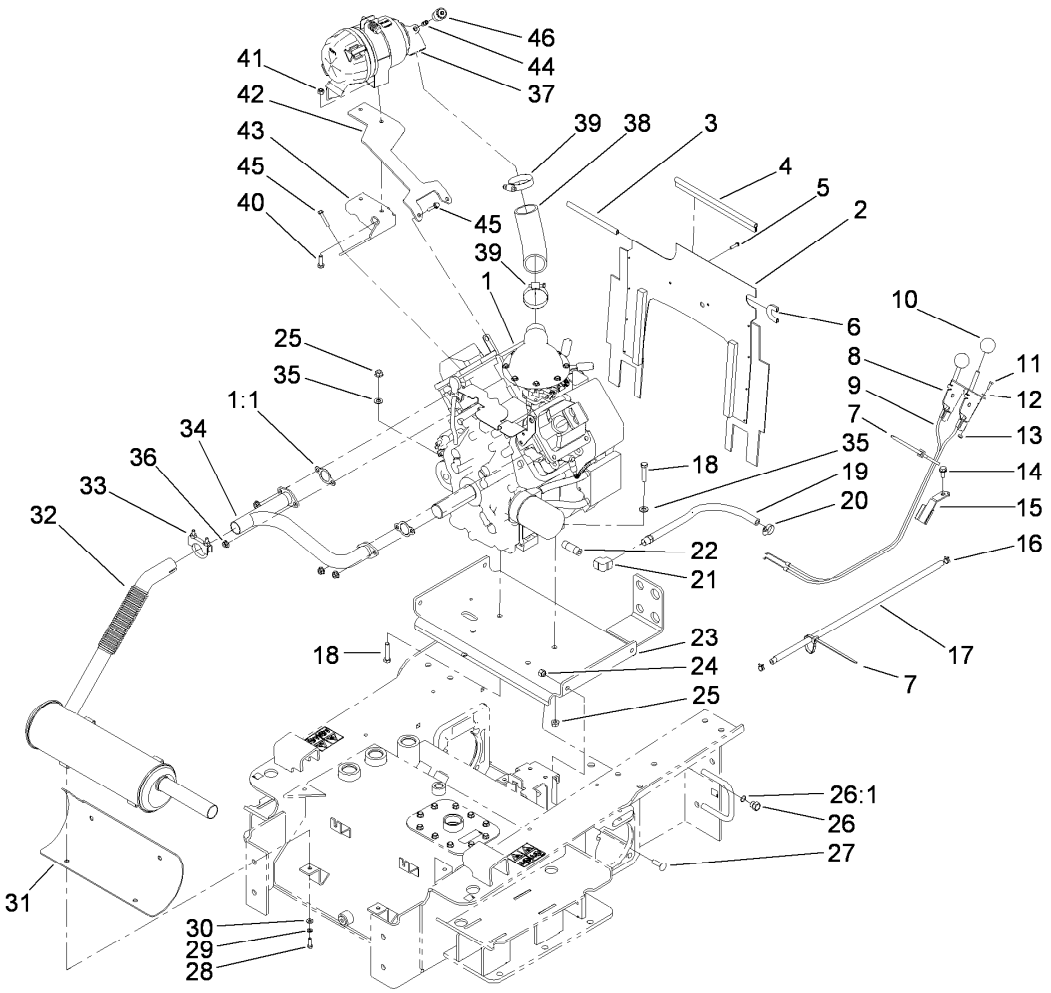


# Engine and Mount Assembly

| Ref. | Part Number | Qty. | Description |
|---|---|---|---|
| 1 | | 1 | Engine-Kohler, Ch740-3126 ■● |
| 1:1 | 93-0350 | 2 | Gasket-Exhaust |
| 2 | 114-8725 | 1 | Baffle-Engine |
| 3 | 105-0378 | 1 | Seal-Strip, 6.5 Inch |
| 4 | 115-4837 | 1 | Strip-Seal, 10.5 Inch |
| 5 | 32144-36 | 2 | Screw-PPH |
| 6 | 105-0377 | 1 | Seal-Strip, 3 Inch |
| 7 | 3290-378 | 2 | Tie-Cable |
| 8 | 108-9730 | 2 | Lever-Control |
| 9 | 108-4679 | 2 | Cable-Throttle/Choke |
| 10 | 233-42 | 2 | Knob |
| 11 | 3290-134 | 4 | Screw |
| 12 | 3256-51 | 4 | Washer-Flat |
| 13 | 3296-2 | 4 | Nut-Lock, NI |
| 14 | 32144-11 | 1 | Screw-HWH |
| 15 | 100-1299-03 | 1 | Guide-Cable |
| 16 | 2412-98 | 2 | Clamp-Hose |
| 17 | 109-0301 | 1 | Hose-Fuel |
| 18 | 323-53 | 4 | Screw-HH |
| 19 | 100-1256 | 1 | Oil Hose ASM |
| 20 | 2412-36 | 1 | Clamp-Hose |
| 21 | 94-9650 | 1 | Elbow-90 DEG |
| 22 | 289-42 | 1 | Nipple |
| 23 | 114-1288-03 | 1 | Plate-Mounting, Engine |
| 24 | 3296-39 | 4 | Nut-Lock, NI |
| 25 | 32128-21 | 4 | Nut-HF Lock |
| 26 | 353-508 | 1 | Plug-HH |
| 26:1 | 237-42 | 1 | O-Ring |
| 27 | 3231-28 | 4 | Screw-CARR |
| 28 | 321-5 | 4 | Screw-HH |
| 29 | 3253-3 | 4 | Washer-Lock |
| 30 | 3256-78 | 4 | Washer-Flat |
| 31 | 98-2762 | 1 | Shield-Heat, Muffler |
| 32 | 105-0249 | 1 | Muffler |
| 33 | 2112-11 | 1 | Clamp-Muffler |
| 34 | 110-0150 | 1 | Manifold-Crossover |
| 35 | 48-9220 | 4 | Washer-Flat |
| 36 | 112-2844 | 4 | Nut-HF |
| 37 | 99-3160 | 1 | Air Cleaner ASM |
| 38 | 114-8734 | 1 | Hose-Air Cleaner |
| 39 | 2412-92 | 2 | Clamp-Hose |
| 40 | 322-5 | 2 | Screw-HH |
| 41 | 32128-20 | 2 | Nut-HF |
| 42 | 115-4850-03 | 1 | Bracket-Left Support, Air Filter |
| 43 | 115-4851-03 | 1 | Bracket-Right Support, Air Filter |
| 44 | 105-4292 | 1 | Nipple-Pipe |

● Not serviced separately

■ Obtain parts from www.kohlerplus.com

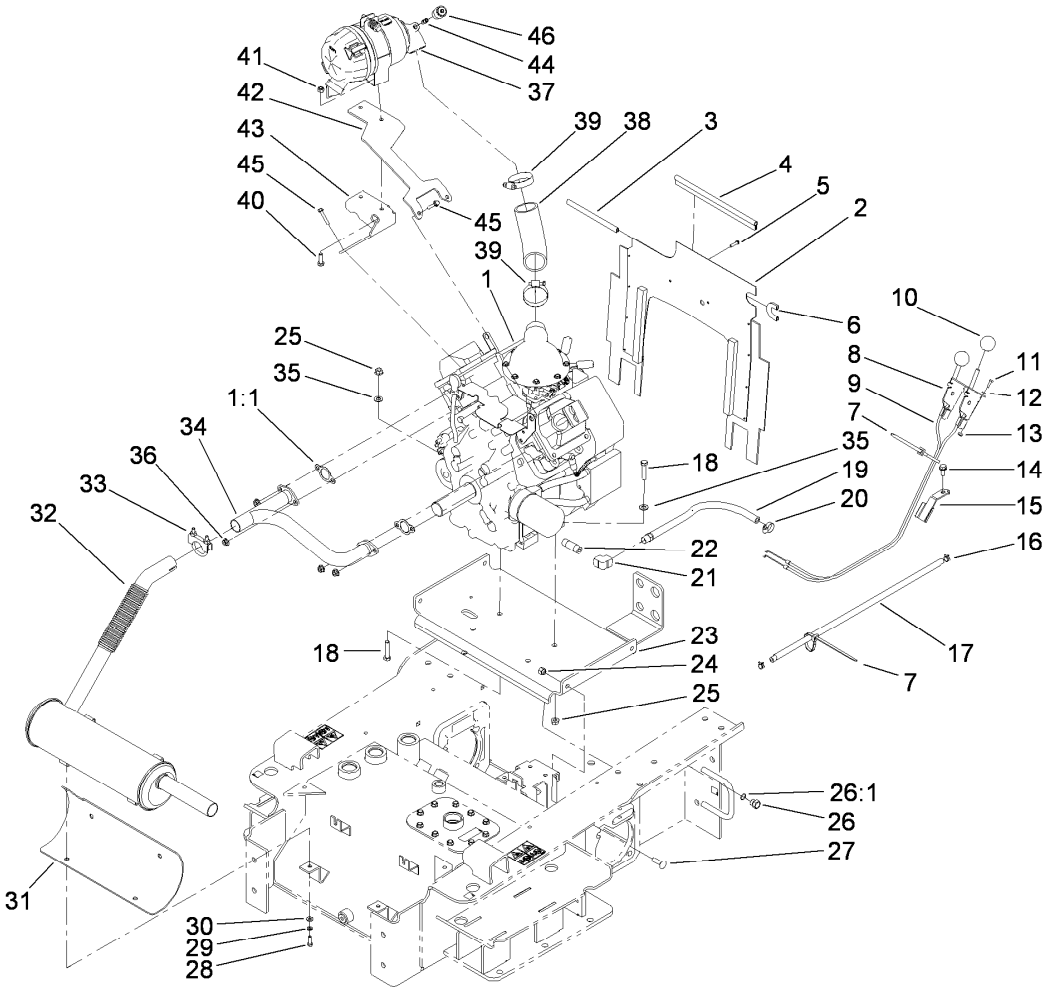


# Engine and Mount Assembly (continued)

| *Ref.* | *Part Number* | *Qty.* | *Description* |
|---|---|---|---|
| 45 | 33103-035 | 4 | Screw-HHF |
| 46 | 93-9164 | 1 | Indicator-Mini |

● Not serviced separately

■ Obtain parts from www.kohlerplus.com

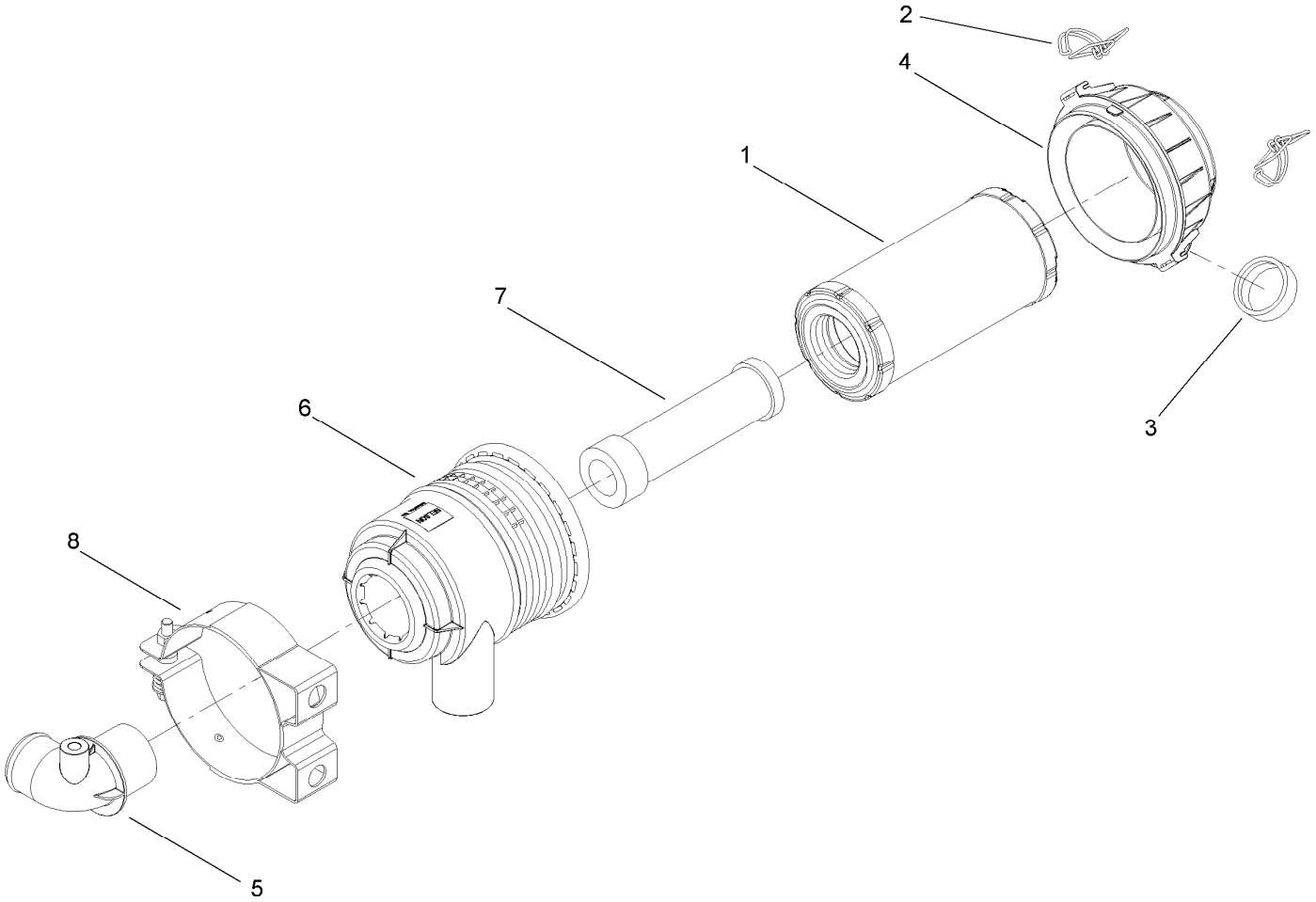


# Air Cleaner Assembly No. 99-3160

| *Ref.* | *Part Number* | *Qty.* | *Description* |
|---|---|---|---|
| 1 | 99-3173 | 1 | Element-Filter, Air |
| 2 | 99-3174 | 2 | Clip-Cleaner, Air |
| 3 | 99-3175 | 1 | Valve-Ejector, Dust |
| 4 | 99-3176 | 1 | Cover |
| 5 | 99-3183 | 1 | Tube ASM |
| 6 | 99-3184 | 1 | Housing |
| 7 | 99-3198 | 1 | Filter-Safety |
| 8 | 99-3197 | 1 | Mounting Bracket ASM |

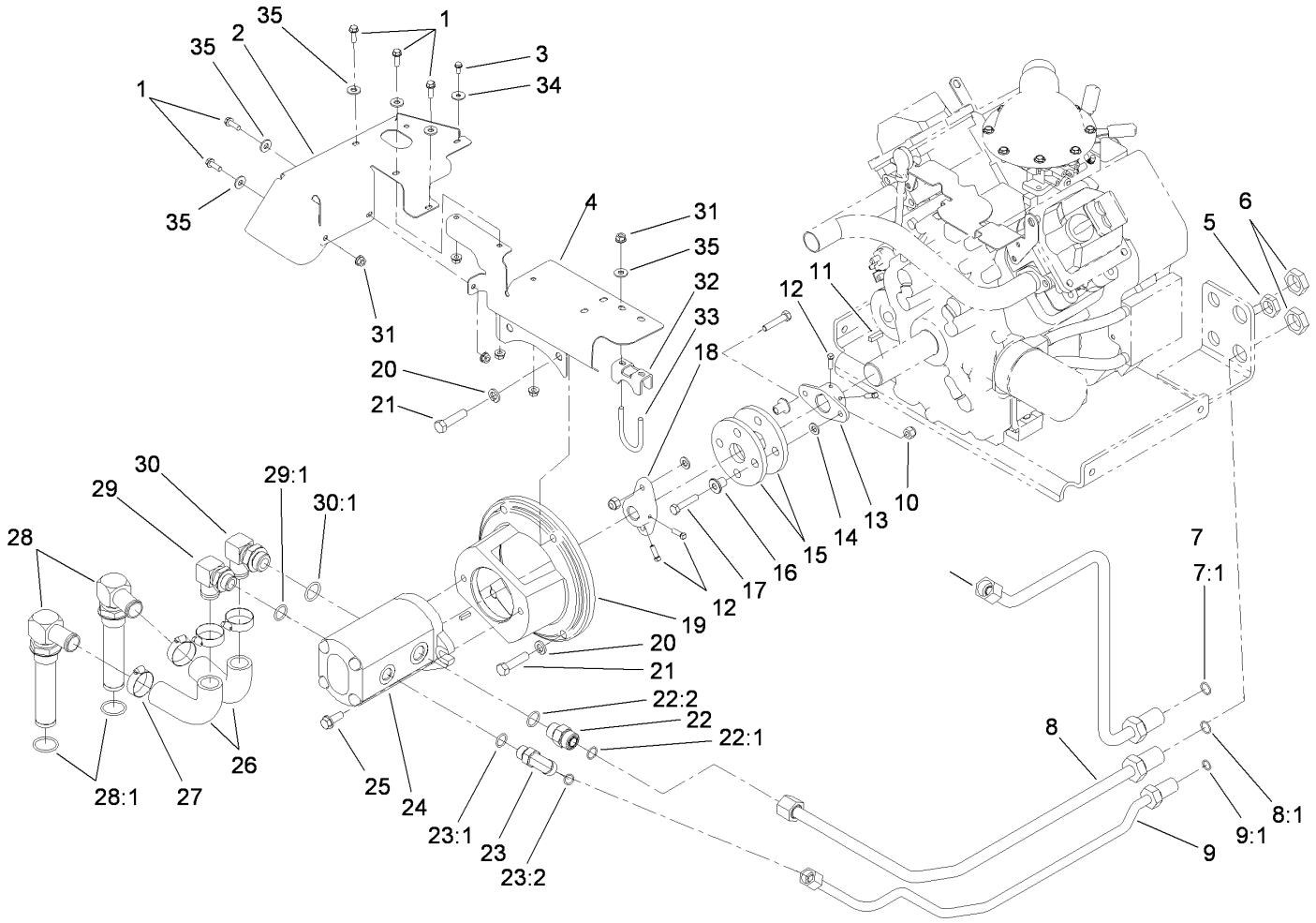


# Hydraulic Pump and Filter Assembly

| Ref. | Part Number | Qty. | Description |
|---|---|---|---|
| 1 | 32105-15 | 5 | Screw-HWH |
| 2 | 112-2667 | 1 | Shield-Heat |
| 3 | 32144-112 | 1 | Screw-HWH |
| 4 | 112-2666 | 1 | Shield-Heat |
| 5 | 340-127 | 1 | Nut-Bulkhead |
| 6 | 340-74 | 2 | Nut-Lock, Bulkhead |
| 7 | 106-9333 | 1 | HYD Tube ASM |
| 7:1 | 237-65 | 1 | O-Ring |
| 8 | 98-2783 | 1 | HYD Tube ASM |
| 8:1 | 237-65 | 1 | O-Ring |
| 9 | 106-9393 | 1 | HYD Tube ASM |
| 9:1 | 237-30 | 1 | O-Ring |
| 10 | 3296-29 | 4 | Nut-Lock, NI |
| 11 | 10-7070 | 1 | Key-Square |
| 12 | 3241-6 | 4 | Screw-SQH |
| 13 | 110-5236 | 1 | Hub-Engine |
| 14 | 3256-23 | 4 | Washer-Plain |
| 15 | 115-4523 | 2 | Coupling-Rubber |
| 16 | 71-4411 | 4 | Spacer |
| 17 | 322-8 | 4 | Screw-HH |
| 18 | 110-9695 | 1 | Hub-Pump |
| 19 | 98-2751-03 | 1 | Mount-Pump |
| 20 | 3253-6 | 4 | Washer-Lock |

| Ref. | Part Number | Qty. | Description |
|---|---|---|---|
| 21 | 324-7 | 4 | Screw-HH |
| 22 | 340-7 | 1 | Fitting-Straight |
| 22:1 | 237-65 | 1 | O-Ring |
| 22:2 | 237-80 | 1 | O-Ring |
| 23 | 340-98 | 1 | Fitting-Elbow, 90 DEG |
| 23:1 | 237-79 | 1 | O-Ring |
| 23:2 | 237-30 | 1 | O-Ring |
| 24 | 106-7650 | 1 | HYD Pump ASM |
| 25 | 66-9300 | 2 | Screw-HHF |
| 26 | 105-0201 | 2 | Hose-Suction, Formed |
| 27 | 2412-34 | 4 | Clamp-Hose |
| 28 | 105-0204 | 2 | Strainer Fitting ASM |
| 28:1 | 237-146 | 1 | O-Ring |
| 29 | 61-2710 | 1 | Stem-Hose, 90 DEG |
| 29:1 | 237-117 | 1 | O-Ring |
| 30 | 100-4202 | 1 | Fitting-90 |
| 30:1 | 237-81 | 1 | O-Ring |
| 31 | 32128-32 | 7 | Nut-HHF |
| 32 | 112-2688 | 1 | Clamp-Pipe |
| 33 | 112-2689 | 1 | U-Bolt |
| 34 | 3256-61 | 1 | Washer-Flat |
| 35 | 3256-2 | 7 | Washer-Flat |

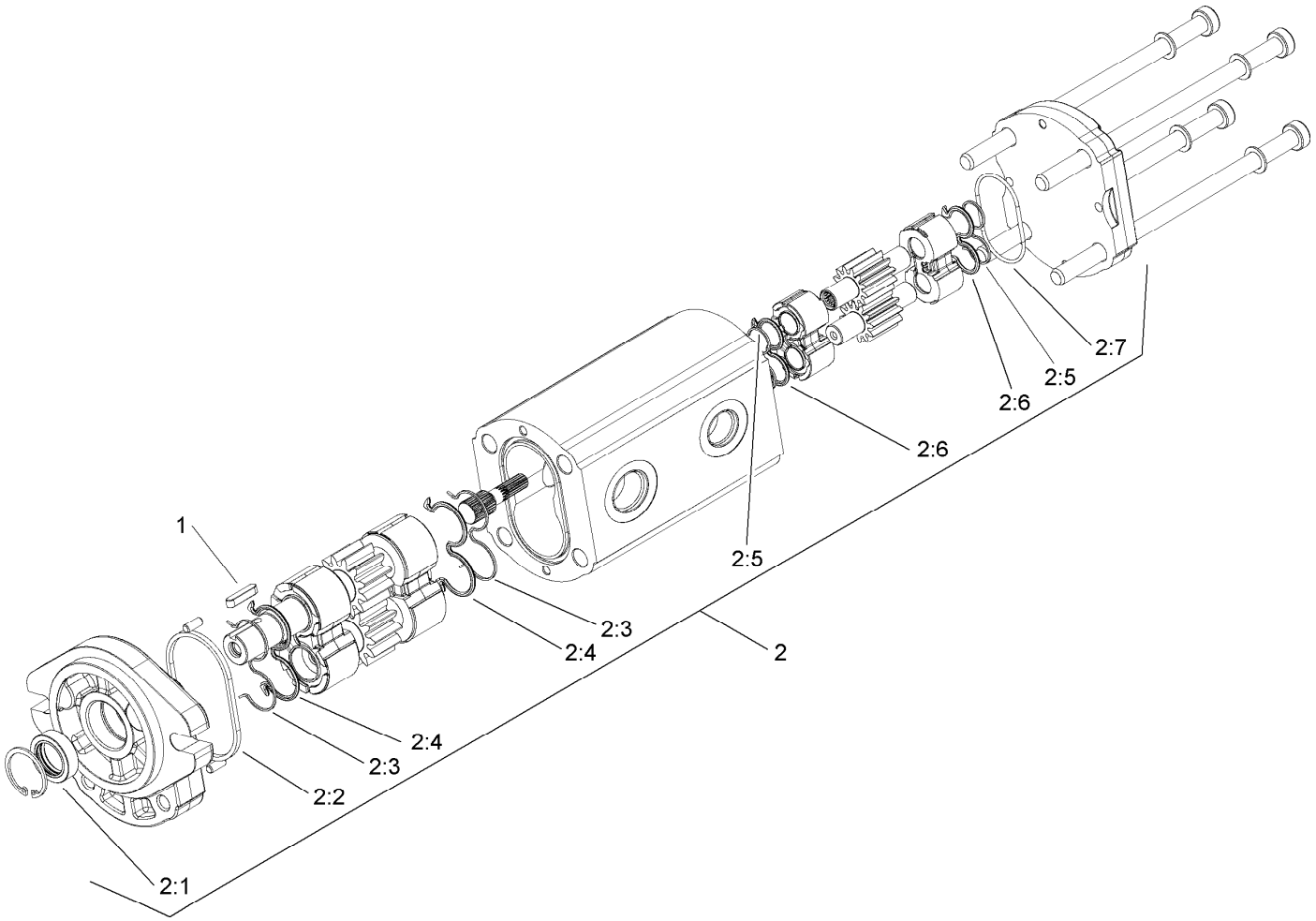


# Hydraulic Gear Pump Assembly No. 106-7650

| *Ref.* | *Part Number* | *Qty.* | *Description* |
|---|---|---|---|
| 1 | 100-4238 | 1 | Key-Square |
| 2 | 107-9316 | 1 | Seal Kit |
| 2:1 | | 1 | Seal-Shaft ● |
| 2:2 | | 1 | Seal-Square ● |
| 2:3 | | 2 | Ring-Backup ● |
| 2:4 | | 2 | Seal-Gear ● |
| 2:5 | | 2 | Ring-Backup ● |
| 2:6 | | 2 | Seal-Gear, Rear ● |
| 2:7 | | 1 | O-Ring ● |

● Not serviced separately

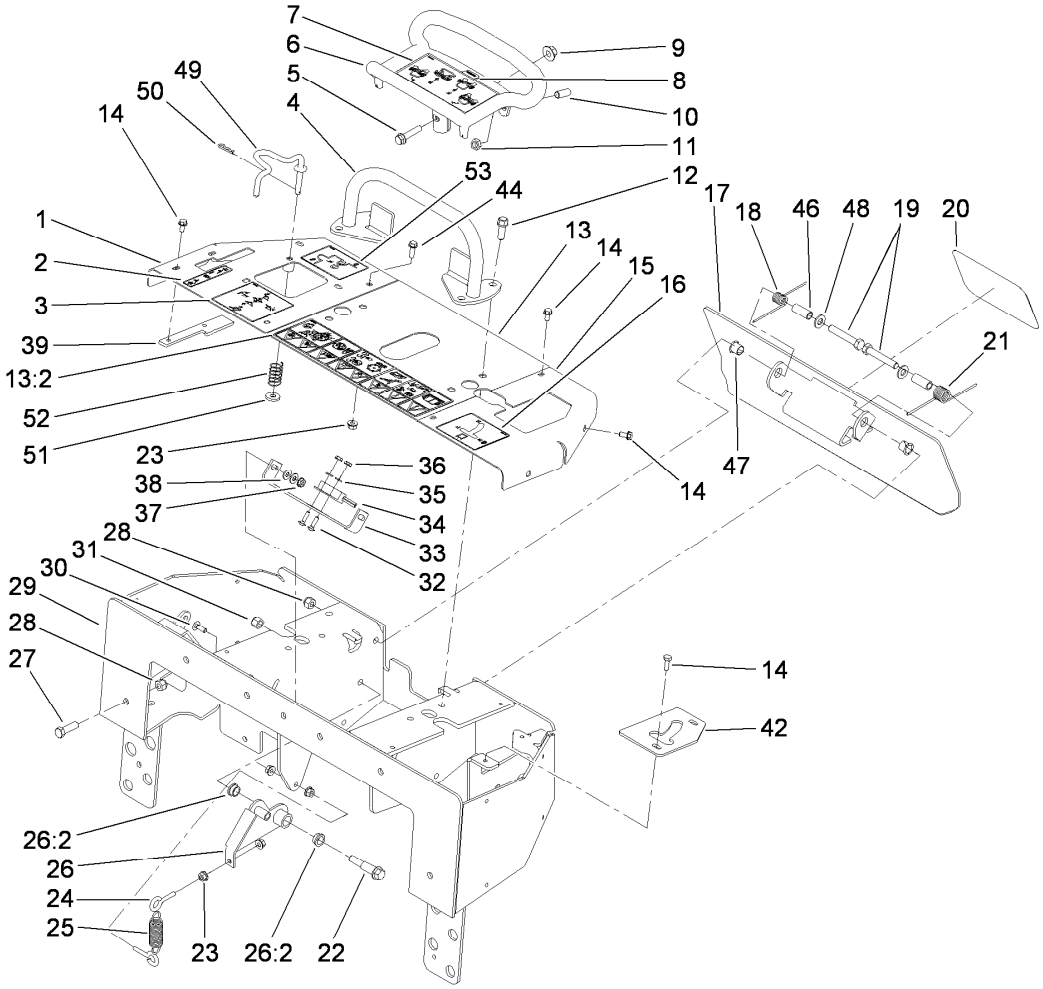


# Control Panel Assembly

| Ref. | Part Number | Qty. | Description |
|---|---|---|---|
| 1 | 115-4836-01 | 1 | Panel-RH |
| 2 | 115-4859 | 1 | Decal-Brake |
| 3 | 115-4857 | 1 | Decal-Control, Loader |
| 4 | 106-7715 | 1 | Bar-Reference |
| 5 | 3234-18 | 1 | Screw-HHF |
| 6 | 106-7614-03 | 1 | Handle-Control |
| 7 | 115-4020 | 1 | Decal-Traction |
| 8 | 98-1459 | 1 | Decal |
| 9 | 32128-43 | 1 | Nut-Flange |
| 10 | 3247-6 | 2 | Screw-Set |
| 11 | 3218-3 | 2 | Nut-Jam |
| 12 | 95-1726 | 4 | Screw-Taptite |
| 13 | 108-4643 | 1 | Center Panel ASM |
| 13:2 | 115-4860 | 1 | Decal-Danger |
| 14 | 9266714 | 11 | Screw-HWH |
| 15 | 112-2737-01 | 1 | Panel-LH |
| 16 | 115-4861 | 1 | Decal-Control, Auxiliary |
| 17 | 112-2786-03 | 1 | Plate-Reverse |
| 18 | 98-8425 | 1 | Spring-Torsion, LH |
| 19 | 323-11 | 2 | Screw-HH |
| 20 | 105-1217 | 1 | Decal |
| 21 | 98-8424 | 1 | Spring-Torsion, RH |
| 22 | 66-0560 | 1 | Bolt-Shoulder |
| 23 | 32128-32 | 5 | Nut-HHF |
| 24 | 71-2870 | 2 | Bolt-Eye |
| 25 | 108-4724 | 1 | Spring-Extension |
| 26 | 100-4203 | 1 | Neutral Centering Lever ASM |
| 26:2 | 256-156 | 2 | Bushing-Flange |
| 27 | 323-7 | 5 | Screw-HH |
| 28 | 3296-39 | 7 | Nut-Lock, NI |
| 29 | 110-0228-01 | 1 | Panel-Control |
| 30 | 3229-1 | 2 | Screw-CARR |
| 31 | 3296-6 | 1 | Nut-Lock |
| 32 | 3229-20 | 2 | Screw-CARR |
| 33 | 100-1263 | 1 | Plate-Switch |
| 34 | 100-1270 | 1 | Switch-Proximity |
| 35 | 3256-51 | 2 | Washer-Flat |
| 36 | 32149-7 | 2 | Nut-Keps |
| 37 | 32149-2 | 2 | Nut-Keps |
| 38 | 3256-22 | 4 | Washer-Flat |
| 39 | 112-2691-01 | 1 | Plate-Locking, Brake |
| 42 | 112-2749-01 | 1 | Plate-Stop |
| 44 | 32105-15 | 1 | Screw-HWH |
| 46 | 114-1337 | 2 | Spacer-Spring |
| 47 | 256-257 | 2 | Bushing-Nyliner |
| 48 | 3256-24 | 2 | Washer-Plain |
| 49 | 115-4580 | 1 | Rod-Interlock |
| 50 | 3290-307 | 1 | Pin-Cotter |
| 51 | 88-7200 | 1 | Washer-Flat |
| 52 | 85-6750 | 1 | Spring-Control |
| 53 | 115-4862 | 1 | Decal-Loader Lock |

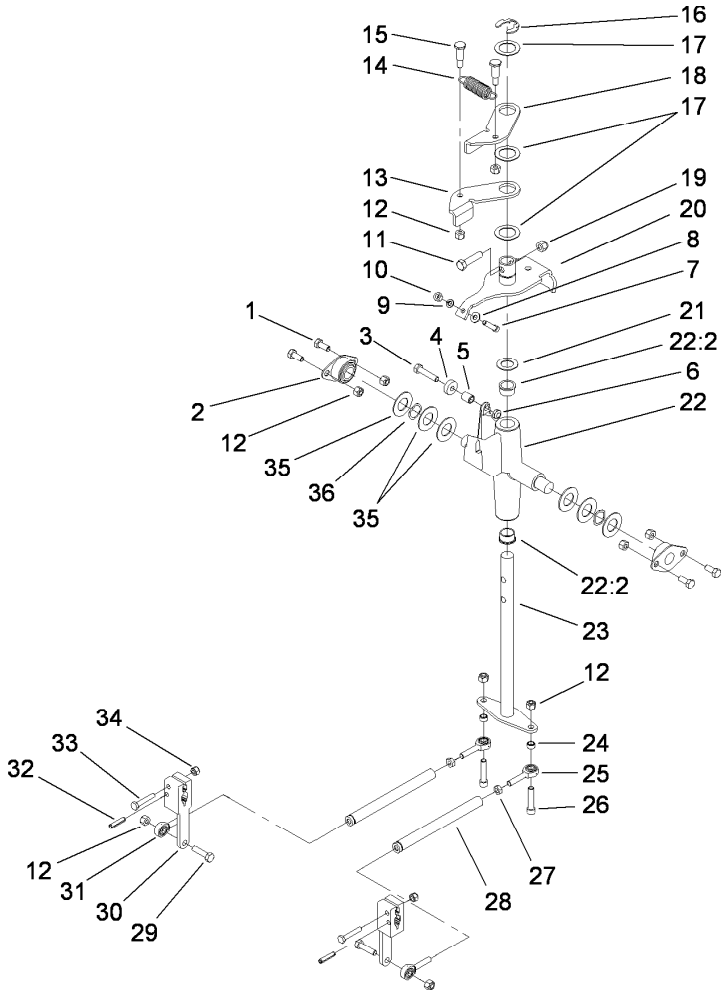


# Traction Control Assembly

| Ref. | Part Number | Qty. | Description |
|---|---|---|---|
| 1 | 322-3 | 4 | Screw-HH |
| 2 | 68-2970 | 2 | Bushing |
| 3 | 322-7 | 1 | Screw-HH |
| 4 | 251-259 | 1 | Bearing-Ball |
| 5 | 88-7450 | 1 | Spacer-Lever, Control |
| 6 | 3296-47 | 1 | Nut-Lock,NI |
| 7 | 3274-51 | 1 | Screw-HSH |
| 8 | 3256-22 | 1 | Washer-Flat |
| 9 | 3253-3 | 1 | Washer-Lock |
| 10 | 3217-5 | 1 | Nut-Hex |
| 11 | 323-8 | 1 | Screw-HH |
| 12 | 3296-29 | 10 | Nut-Lock, NI |
| 13 | 98-8407 | 1 | Lever-Return, RH |
| 14 | 108-4724 | 1 | Spring-Extension |
| 15 | 63-2650 | 2 | Screw-Shoulder |
| 16 | 32151-91 | 1 | Ring-Retaining |
| 17 | 108-9743 | 3 | Washer-Plain |
| 18 | 98-8408 | 1 | Lever-Return, LH |
| 19 | 3296-39 | 1 | Nut-Lock, NI |

| Ref. | Part Number | Qty. | Description |
|---|---|---|---|
| 20 | 112-2783 | 1 | Lever-Pivot |
| 21 | 257-8 | 1 | Washer-Thrust |
| 22 | 106-5737 | 1 | Control Support ASM |
| 22:2 | 256-252 | 2 | Bearing-Flange |
| 23 | 106-5745 | 1 | Drive Rod ASM |
| 24 | 92-3133 | 2 | Spacer-Lever, Traction |
| 25 | 2411-52 | 2 | Bearing-Rod End, RH |
| 26 | 3274-83 | 2 | Screw-HSH |
| 27 | 3220-2 | 2 | Nut-Jam |
| 28 | 95-3711 | 2 | Rod-Linkage |
| 29 | 322-6 | 2 | Screw-HH |
| 30 | 106-5739 | 2 | Arm-Control, Pump |
| 31 | 2411-53 | 2 | Bearing-Rod End, LH |
| 32 | 100-5440 | 2 | Pin-Spring, Slotted |
| 33 | 321-9 | 2 | Screw-HH |
| 34 | 3296-42 | 2 | Nut-Lock, NI |
| 35 | 3256-39 | 8 | Washer-Flat |
| 36 | 95-3703 | 2 | Washer-Spring, Wave |

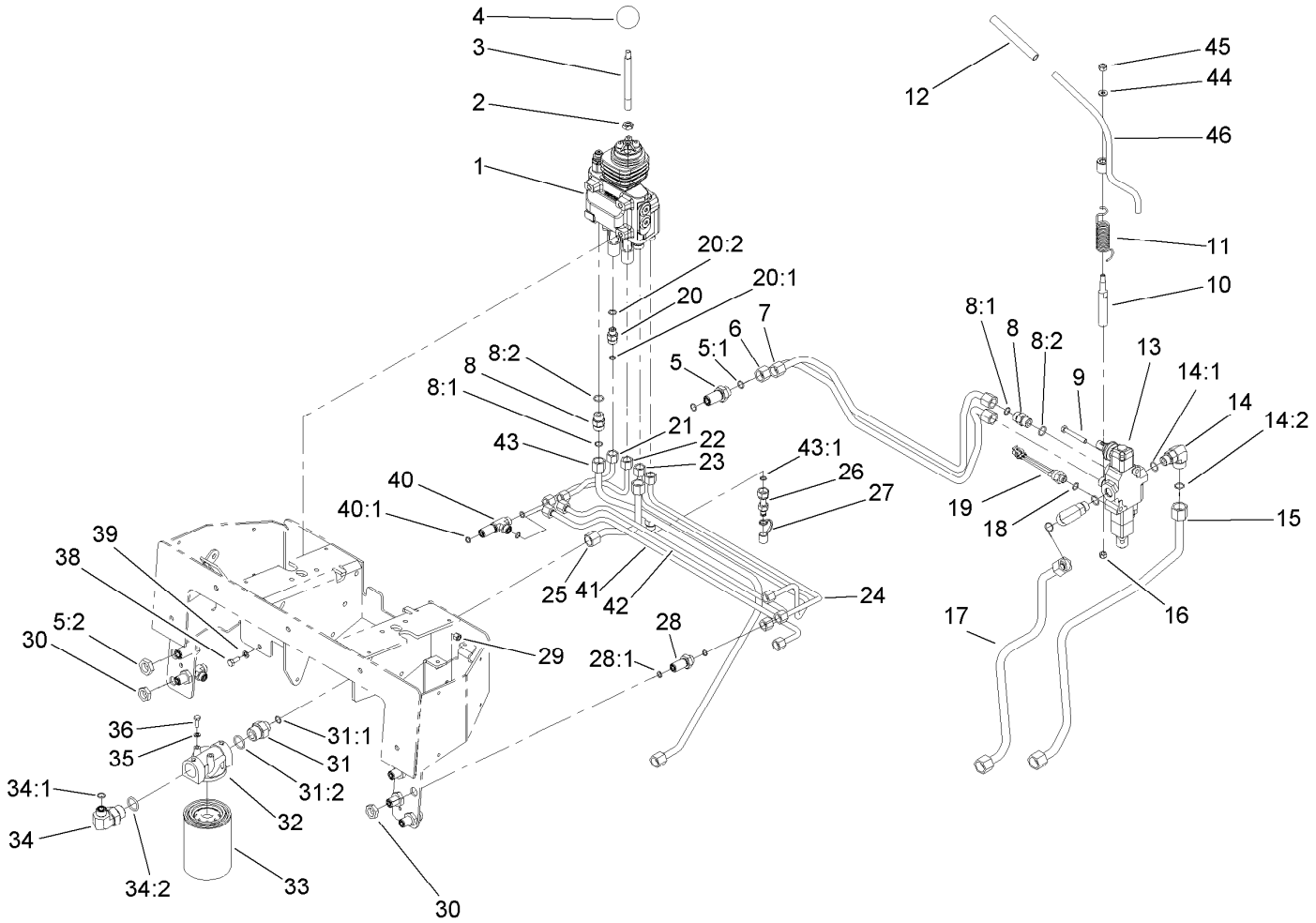


# Principal Hydraulic Assembly

| Ref. | Part Number | Qty. | Description |
|---|---|---|---|
| 1 | 106-9307 | 1 | 2 Spool Valve ASM |
| 2 | 51-2070 | 1 | Nut |
| 3 | 108-4675 | 1 | Shaft-Handle, Loader |
| 4 | 233-21 | 1 | Knob |
| 5 | 340-161 | 2 | Fitting-Bulkhead |
| 5:1 | 237-30 | 2 | O-Ring |
| 5:2 | 340-127 | 1 | Nut-Bulkhead |
| 6 | 106-9310 | 1 | Tube-HYD |
| 7 | 106-9311 | 1 | Tube-HYD |
| 8 | 340-4 | 4 | Fitting-Straight |
| 8:1 | 237-30 | 1 | O-Ring |
| 8:2 | 237-79 | 1 | O-Ring |
| 9 | 322-11 | 2 | Screw-HH |
| 10 | 104-2827 | 1 | Spacer-Hiflo |
| 11 | 112-2738 | 1 | Spring-Torsion |
| 12 | 112-2605 | 1 | Grip-Rubber |
| 13 | 104-2831 | 1 | 1 Spool Valve ASM |
| 14 | 340-153 | 2 | Fitting-Elbow, 90 DEG |
| 14:1 | 237-79 | 1 | O-Ring |
| 14:2 | 237-151 | 1 | O-Ring |
| 15 | 106-9309 | 1 | Tube-HYD |
| 16 | 48-7740 | 1 | Screw |
| 17 | 104-5707 | 1 | Tube-HYD |
| 18 | 237-42 | 1 | O-Ring |
| 19 | 72-4310 | 1 | Switch-Ball |
| 20 | 340-2 | 4 | Fitting-Straight |
| 20:1 | 237-22 | 1 | O-Ring |

| Ref. | Part Number | Qty. | Description |
|---|---|---|---|
| 20:2 | 237-42 | 1 | O-Ring |
| 21 | 106-9315 | 1 | Tube-HYD |
| 22 | 106-9313 | 1 | Tube-HYD |
| 23 | 106-9312 | 1 | Tube-HYD |
| 24 | 106-9314 | 1 | Tube-HYD |
| 25 | 106-9385 | 1 | Tube-HYD |
| 26 | 86-5480 | 1 | Nipple-Test |
| 27 | 354-79 | 1 | Cap-Dust |
| 28 | 340-71 | 4 | Fitting-Straight, Bulkhead |
| 28:1 | 237-22 | 2 | O-Ring |
| 29 | 3296-29 | 2 | Nut-Lock, NI |
| 30 | 340-70 | 6 | Nut-Lock |
| 31 | 100-4240 | 1 | Fitting-STR |
| 31:1 | 237-30 | 1 | O-Ring |
| 31:2 | 237-81 | 1 | O-Ring |
| 32 | 92-5821 | 1 | Head-Filter |
| 33 | 86-3010 | 2 | Filter-Oil |
| 34 | 340-131 | 1 | Fitting-HYD, 90 DEG |
| 34:1 | 237-30 | 1 | O-Ring |
| 34:2 | 237-81 | 1 | O-Ring |
| 35 | 3253-3 | 2 | Washer-Lock |
| 36 | 321-4 | 2 | Screw-HH |
| 38 | 322-3 | 3 | Screw-HH |
| 39 | 3253-4 | 3 | Washer-Lock |
| 40 | 340-68 | 2 | Fitting-Tee, Bulkhead |
| 40:1 | 237-22 | 3 | O-Ring |
| 41 | 106-9316 | 1 | Tube-HYD |
| 42 | 106-9317 | 1 | Tube-HYD |

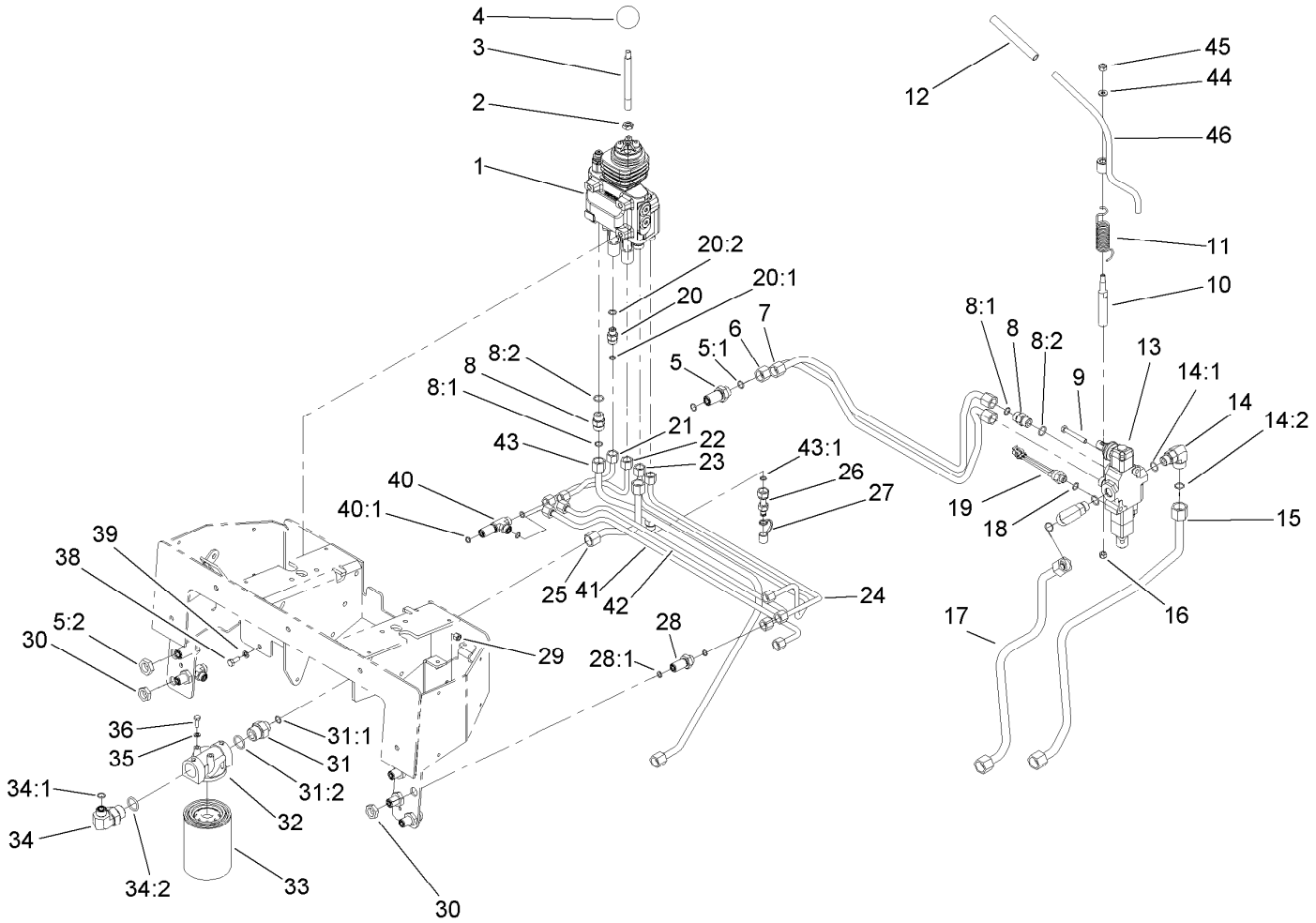


# Principal Hydraulic Assembly (continued)

| Ref. | Part Number | Qty. | Description |
|---|---|---|---|
| 43 | 106-9387 | 1 | HYD Tube ASM |
| 43:1 | 237-22 | 1 | O-Ring |
| 44 | 3256-16 | 1 | Washer-Flat |
| 45 | 3296-42 | 1 | Nut-Lock, NI |
| 46 | 112-2739 | 1 | Lever-Auxiliary |

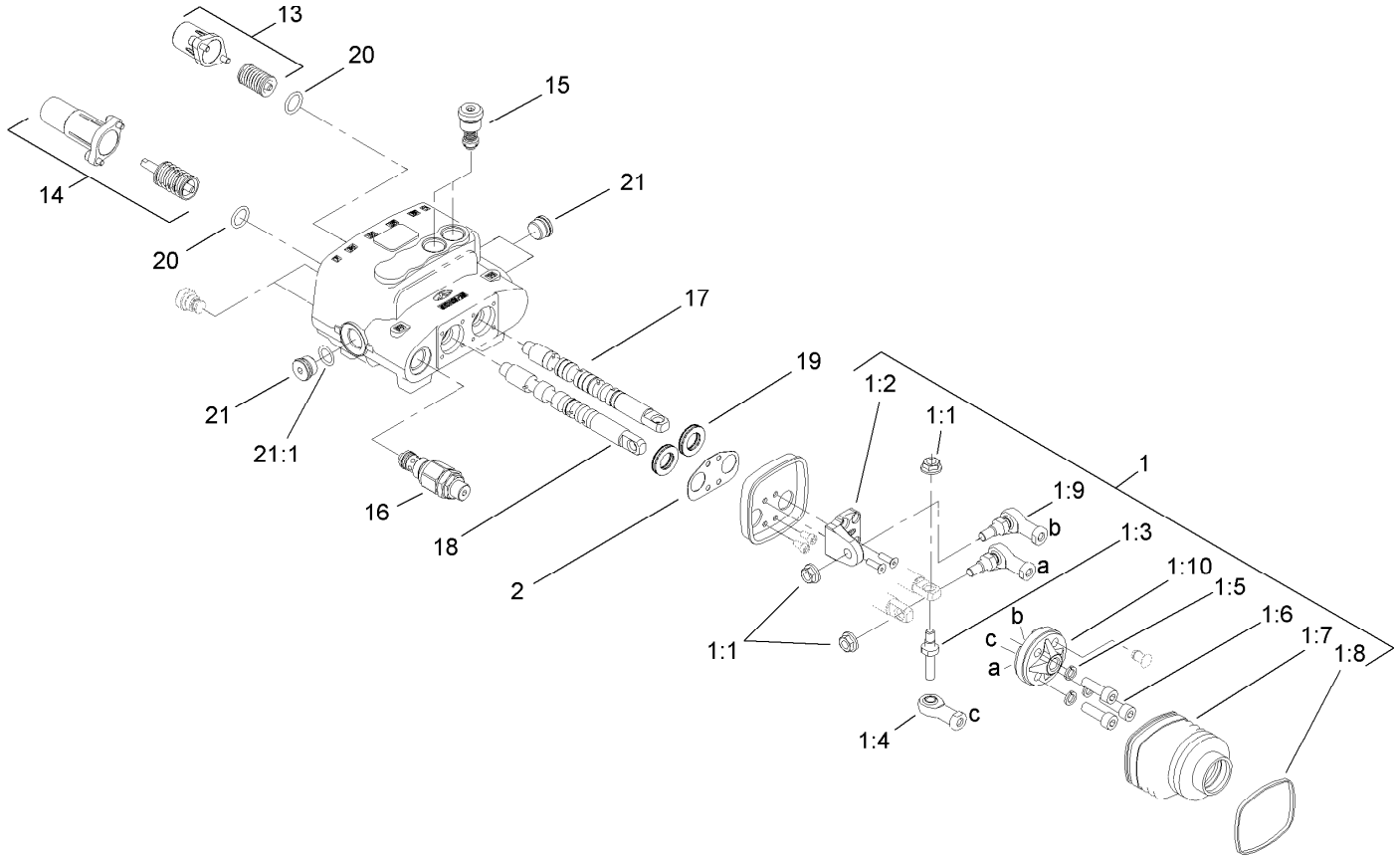


# Two Spool Valve Assembly No. 106-9307

| *Ref.* | *Part Number* | *Qty.* | *Description* |
|---|---|---|---|
| 1 | 106-7724 | 1 | Joystick Kit |
| 1:1 | 98-0668 | 3 | Nut |
| 1:2 | 106-7726 | 1 | Pivot-Joystick |
| 1:3 | 106-7727 | 1 | Pin-Joystick |
| 1:4 | 106-7728 | 1 | End-Rod |
| 1:5 | 42-9850 | 3 | Washer-Lock, Spring |
| 1:6 | 98-5828 | 3 | Screw-HSH |
| 1:7 | 106-7729 | 1 | Bellow-Rubber |
| 1:8 | 3290-379 | 1 | Tie-Cable |
| 1:9 | 106-7730 | 2 | Joint-Joystick |
| 1:10 | 106-7731 | 1 | Holder-Articulated |
| 2 | 106-7725 | 1 | Seal-Joystick |
| 13 | 106-7732 | 1 | Valve Spring Kit |
| 14 | 106-7733 | 1 | Detent Spring Kit |
| 15 | 106-7734 | 2 | Valve-Relief |
| 16 | 106-7735 | 1 | Valve-Relief, Main |
| 17 | 106-7736 | 1 | Spool-Valve |
| 18 | 106-7737 | 1 | Spool-Valve |
| 19 | 106-7738 | 2 | Seal-Valve, Spool |
| 20 | 106-7719 | 2 | Seal-Valve |
| 21 | 353-988 | 3 | Plug-Hex |
| 21:1 | 237-79 | 1 | O-Ring |

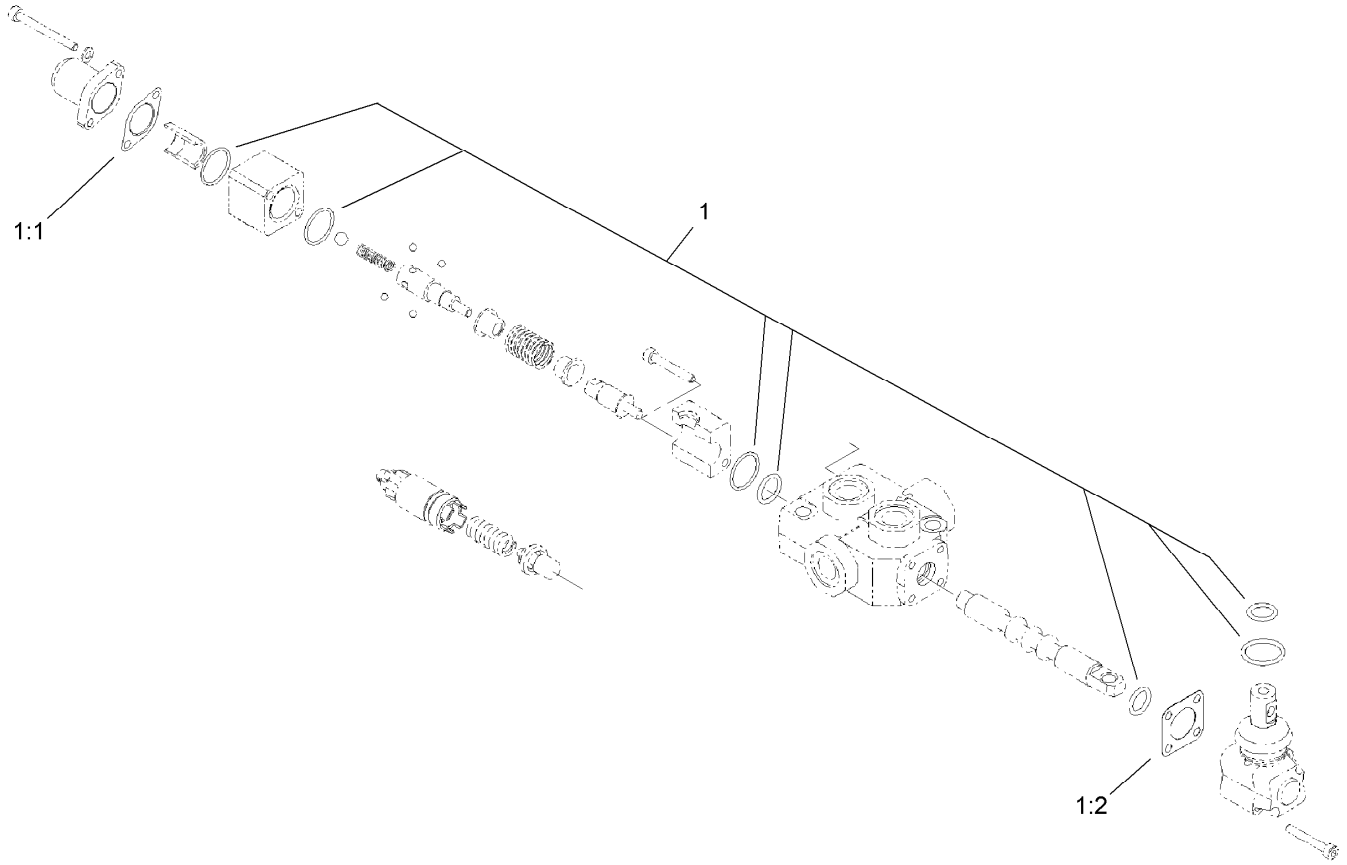


# One Spool Valve Assembly No. 104-2831

| *Ref.* | *Part Number* | *Qty.* | *Description* |
|---|---|---|---|
| 1 | 99-4391 | 1 | Seal Kit |
| 1:1 | 99-3074 | 1 | Gasket |
| 1:2 | 99-3075 | 3 | Gasket |

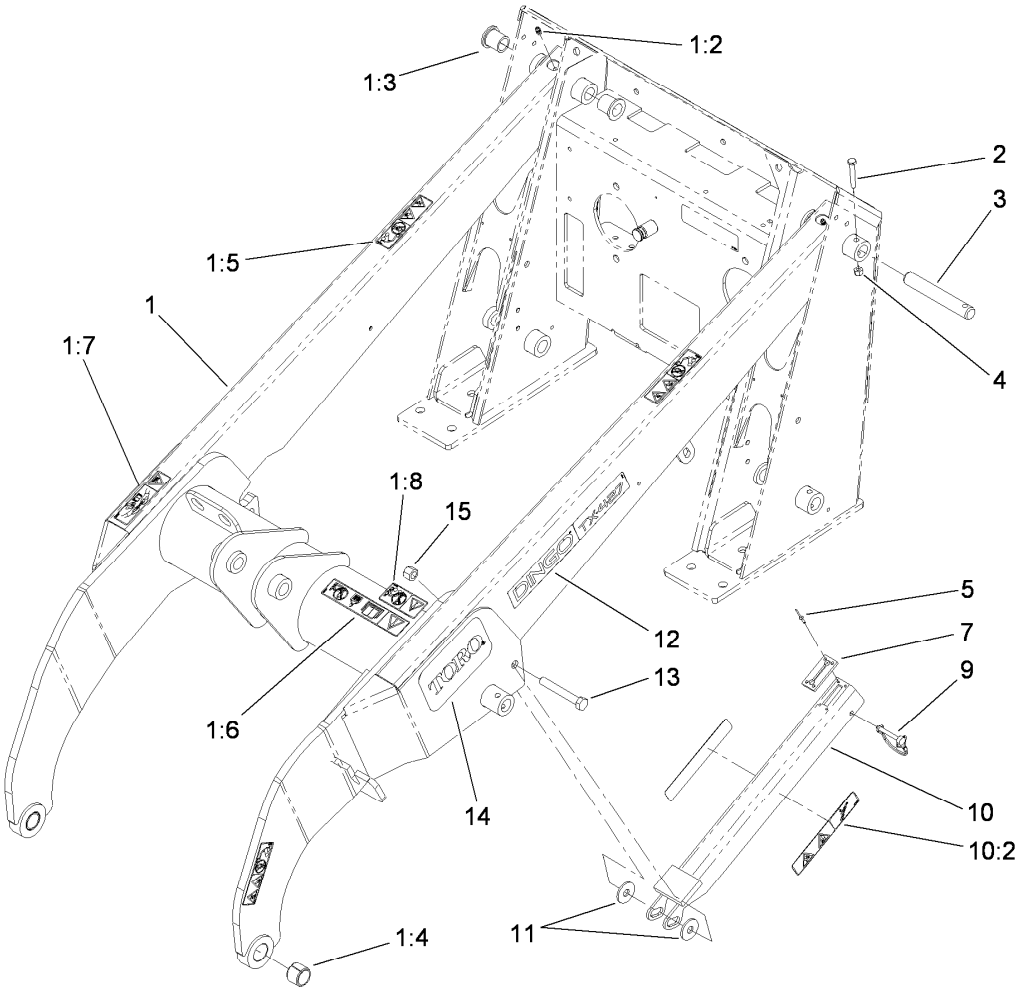


# Loader Arm Assembly

| Ref. | Part Number | Qty. | Description |
|---|---|---|---|
| 1 | 108-4638 | 1 | Loader Arm ASM |
| 1:2 | 302-5 | 2 | Fitting-Grease |
| 1:3 | 95-3577 | 4 | Bushing |
| 1:4 | 98-4871 | 2 | Bushing-Tension |
| 1:5 | 100-8821 | 4 | Decal-Warning, Pinch |
| 1:6 | 115-4856 | 1 | Decal-Caution |
| 1:7 | 115-4855 | 1 | Decal-Caution |
| 1:8 | 100-8822 | 1 | Decal-No Rider |
| 2 | 322-10 | 7 | Screw-HH |
| 3 | 104-2849 | 7 | Pin-Locking |
| 4 | 3296-29 | 7 | Nut-Lock, NI |
| 5 | 95-1687 | 4 | Rivet |
| 7 | 98-0083 | 1 | Stop-Rubber |
| 9 | 112-2583 | 1 | Pin-Locking |
| 10 | 108-4639 | 1 | Locking Arm ASM |
| 10:2 | 115-4858 | 2 | Decal-Danger |
| 11 | 68-1440 | 2 | Washer-Rubber |
| 12 | 115-4867 | 2 | Decal |
| 13 | 325-14 | 1 | Screw-HH |
| 14 | 105-1217 | 2 | Decal |
| 15 | 3296-23 | 1 | Nut-Lock, NI |

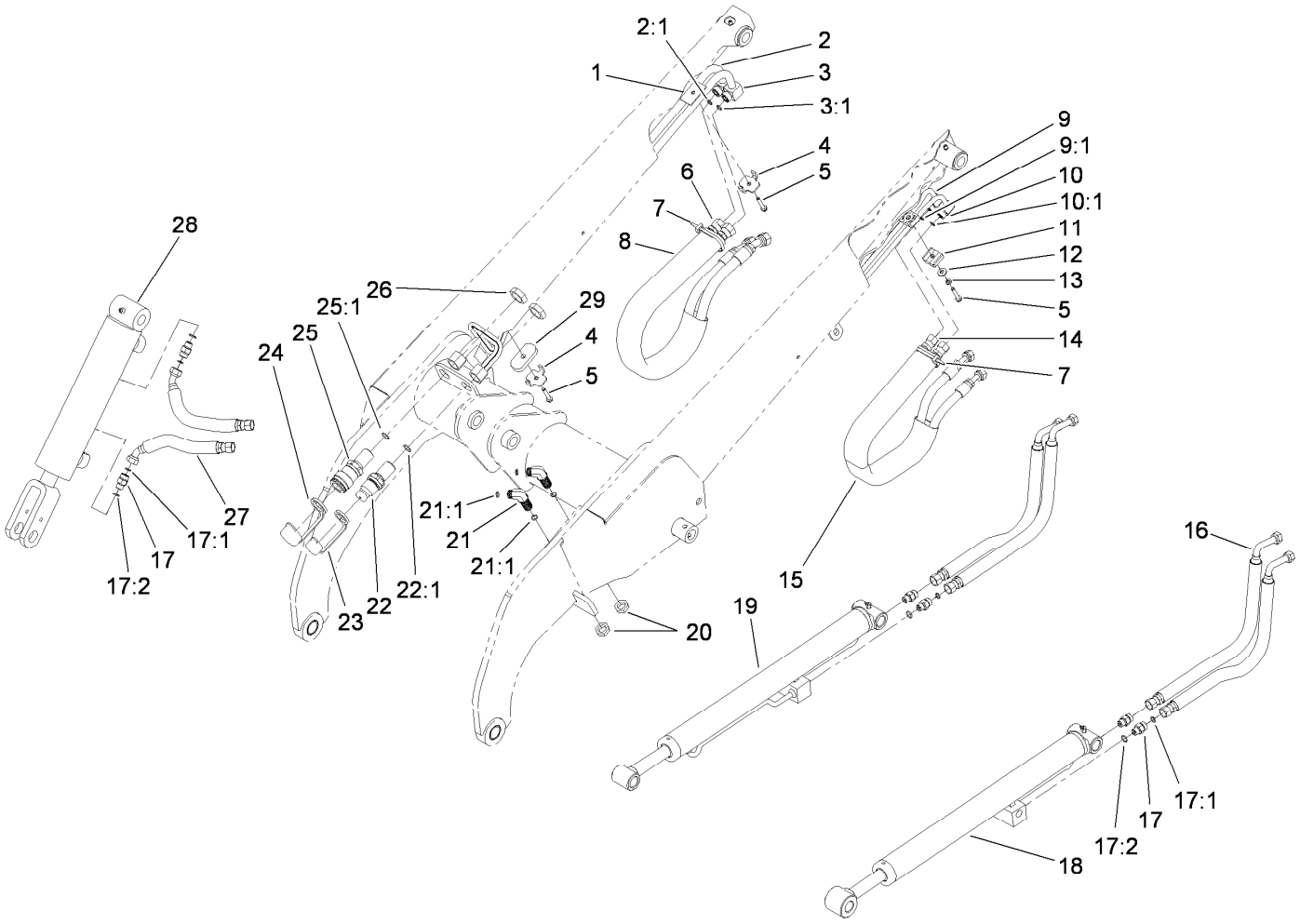


# Loader Arm Hydraulic Assembly

| Ref. | Part Number | Qty. | Description |
|---|---|---|---|
| 1 | 106-9366 | 1 | Spacer-Hardline |
| 2 | 108-6319 | 1 | HYD Tube ASM |
| 2:1 | 237-22 | 1 | O-Ring |
| 3 | 112-2563 | 1 | HYD Tube ASM |
| 3:1 | 237-22 | 1 | O-Ring |
| 4 | 98-0237 | 2 | Plate-Clamp, Tube |
| 5 | 94-2691 | 3 | Screw-HWH Taptite |
| 6 | 98-0242 | 2 | Hose-HYD |
| 7 | 3290-378 | 2 | Tie-Cable |
| 8 | 100-6128 | 1 | Sleeve-Protective |
| 9 | 106-9364 | 1 | HYD Tube ASM |
| 9:1 | 237-22 | 1 | O-Ring |
| 10 | 106-9365 | 1 | HYD Tube ASM |
| 10:1 | 237-22 | 1 | O-Ring |
| 11 | 56-7973 | 2 | Clamp-Tube |
| 12 | 3256-2 | 1 | Washer-Flat |
| 13 | 3253-3 | 1 | Washer-Lock |
| 14 | 98-0213 | 2 | Hose-HYD |
| 15 | 100-6127 | 1 | Sleeve-Protective |
| 16 | 98-0216 | 4 | Hose-HYD |
| 17 | 340-2 | 6 | Fitting-Straight |
| 17:1 | 237-22 | 1 | O-Ring |
| 17:2 | 237-42 | 1 | O-Ring |
| 18 | 104-6267 | 1 | LH Lift Cylinder ASM |
| 19 | 104-6269 | 1 | RH Lift Cylinder ASM |
| 20 | 340-70 | 2 | Nut-Lock |
| 21 | 340-154 | 2 | Union-Bulkhead |
| 21:1 | 237-22 | 2 | O-Ring |
| 22 | 105-8395 | 1 | Bulkhead Nipple ASM |
| 22:1 | 237-65 | 1 | O-Ring |
| 22:2 | 100-6120 | 1 | Seal Kit ● |
| 23 | 100-8815 | 1 | Cap-Dust, Nipple |
| 24 | 100-8816 | 1 | Cap-Dust, Coupler |
| 25 | 105-8394 | 1 | Bulkhead Coupler ASM |
| 25:1 | 237-65 | 1 | O-Ring |
| 26 | 340-74 | 2 | Nut-Lock, Bulkhead |
| 27 | 98-0207 | 2 | Hose-HYD |
| 28 | 105-8370 | 1 | Tilt Cylinder ASM |
| 29 | 112-2565 | 1 | Plate-Hardline |

● Not illustrated

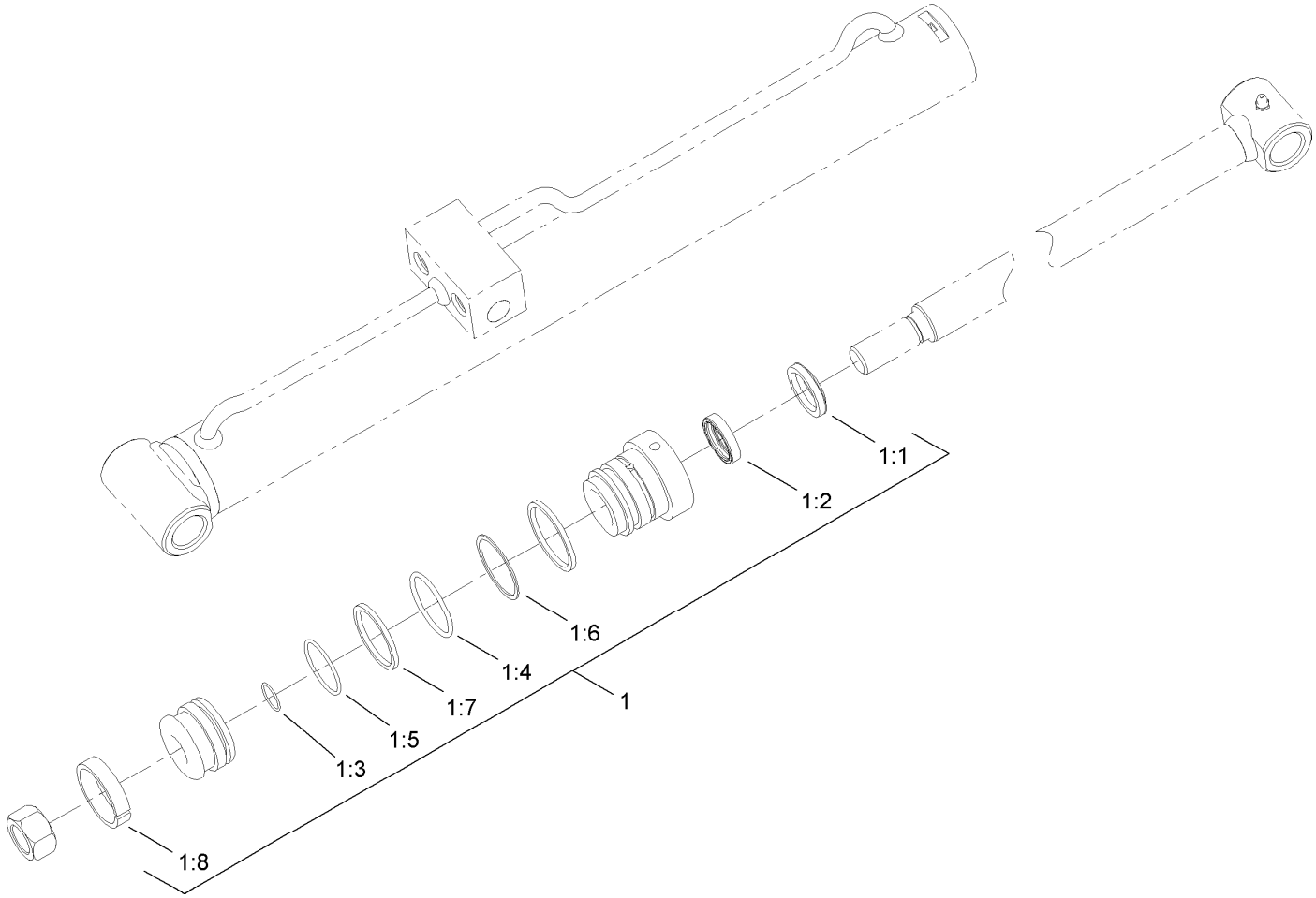


# Left Hand Hydraulic Lift Cylinder Assembly No. 104-6267

| *Ref.* | *Part Number* | *Qty.* | *Description* |
|---|---|---|---|
| 1 | 104-6268 | 1 | Seal Kit |
| 1:1 | | 1 | Wiper ● |
| 1:2 | | 1 | Seal ● |
| 1:3 | | 1 | Ring-Retaining ● |
| 1:4 | | 1 | Ring-Retaining ● |
| 1:5 | | 1 | Ring-Retaining ● |
| 1:6 | | 1 | Back-Up ● |
| 1:7 | | 1 | Seal ● |
| 1:8 | | 1 | Wear Ring ● |

● Not serviced separately

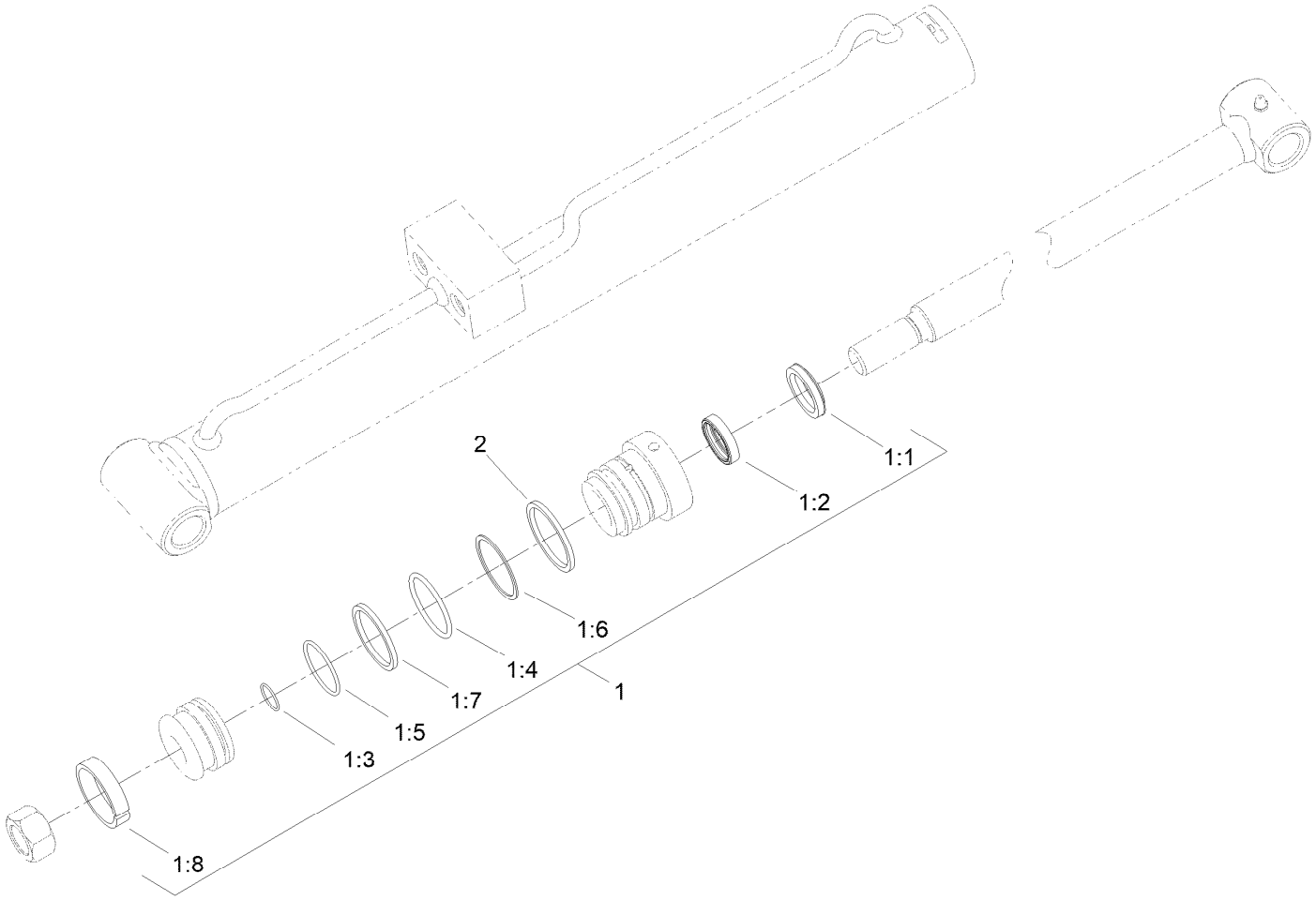


# Right Hand Hydraulic Lift Cylinder Assembly No. 104-6269

| *Ref.* | *Part Number* | *Qty.* | *Description* |
|---|---|---|---|
| 1 | 104-6268 | 1 | Seal Kit |
| 1:1 | | 1 | Wiper ● |
| 1:2 | | 1 | Seal ASM ● |
| 1:3 | | 1 | Seal-Dust ● |
| 1:4 | | 1 | Seal-Dust ● |
| 1:5 | | 1 | Seal-Dust ● |
| 1:6 | | 1 | Back-Up ● |
| 1:7 | | 1 | Seal ASM ● |
| 1:8 | | 1 | Ring-Wear ● |
| 2 | 161-7281 | 1 | Ring - Retaining |

● Not serviced separately

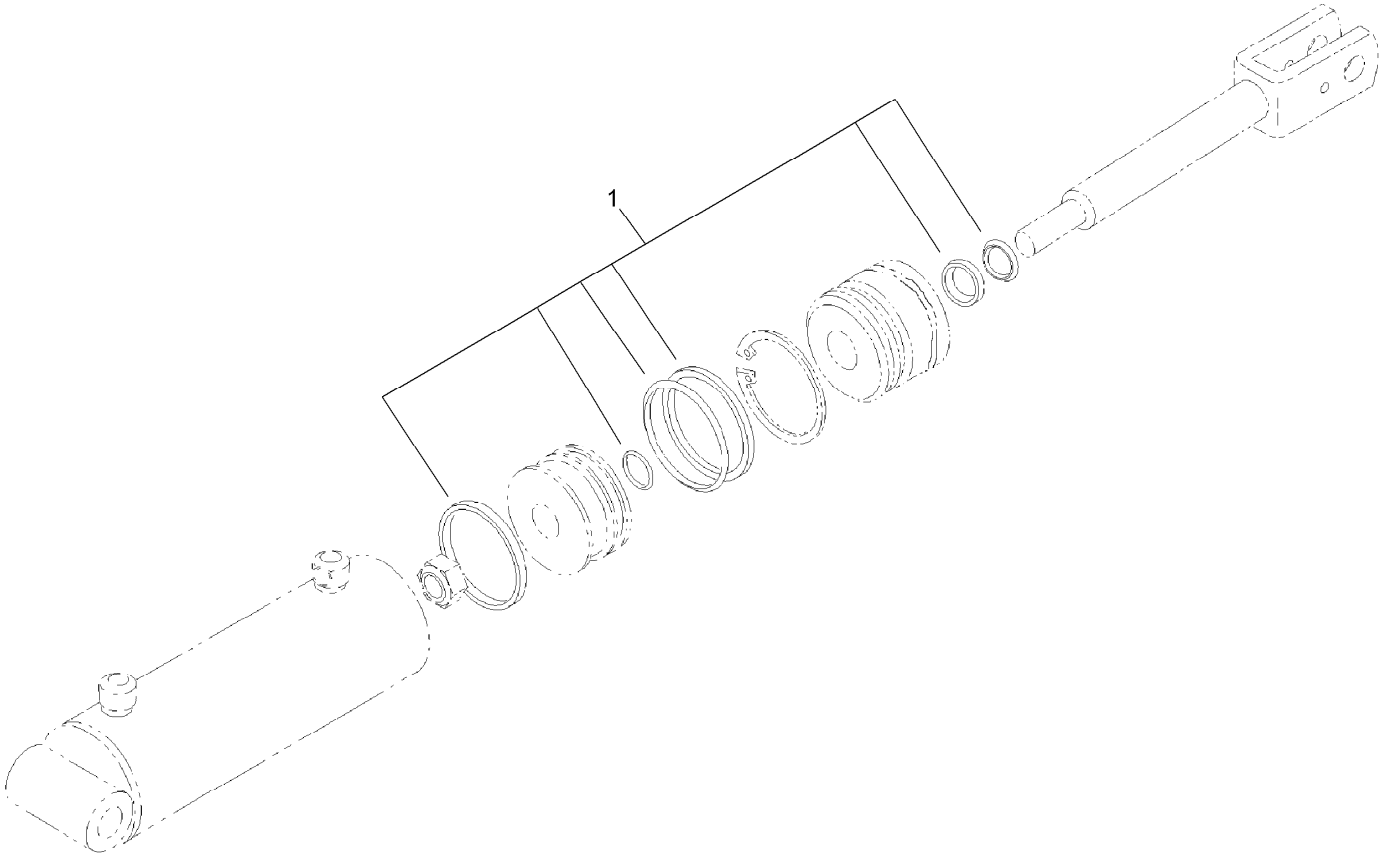


# Hydraulic Cylinder Assembly No. 105-8370

| *Ref.* | *Part Number* | *Qty.* | *Description* |
|---|---|---|---|
| 1 | 106-7567 | 1 | Seal Kit |

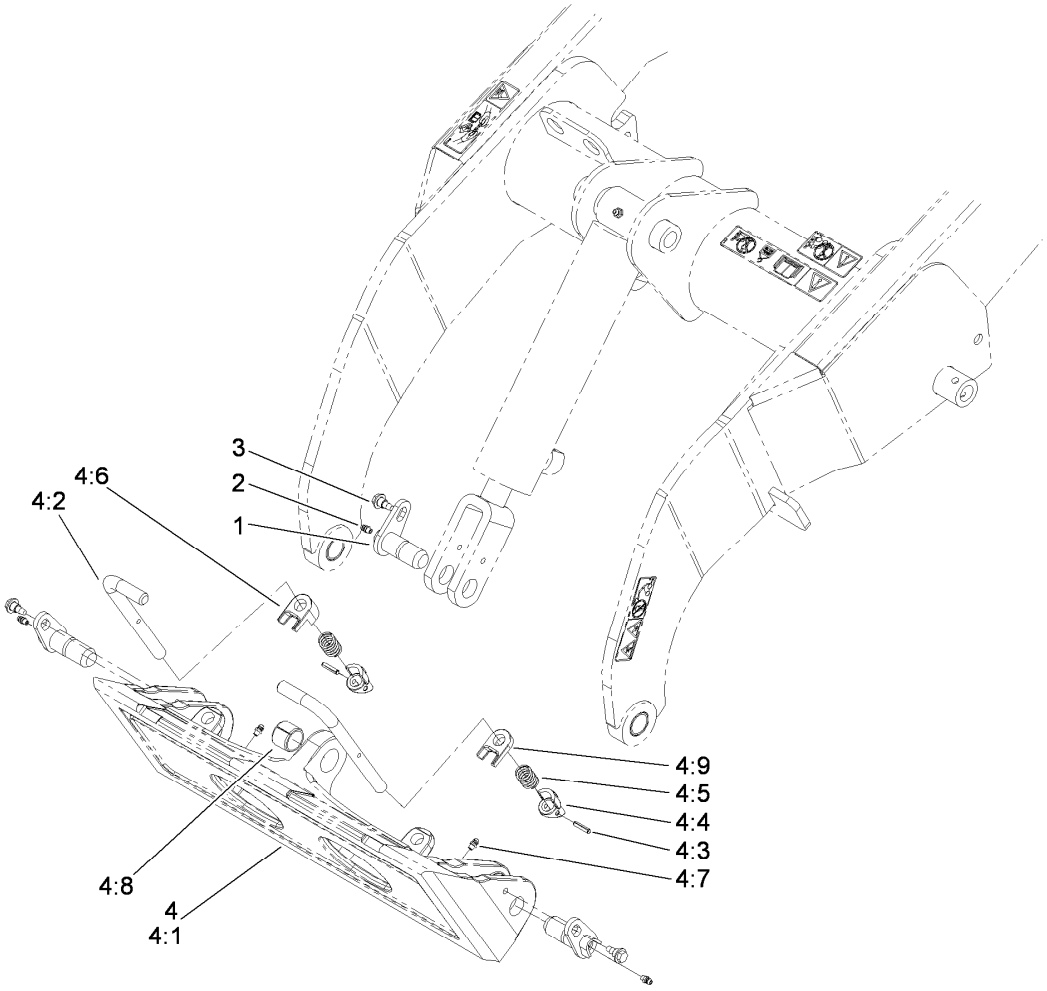


# Quick Attach Assembly

| *Ref.* | *Part Number* | *Qty.* | *Description* |
|---|---|---|---|
| 1 | 112-2609 | 3 | Pin-Pivot |
| 2 | 302-5 | 3 | Fitting-Grease |
| 3 | 99-5105 | 3 | Screw-Shoulder |
| 4 | 115-0788 | 1 | Quick Attach ASM |
| 4:1 | 115-0774-03 | 1 | Mount-Qtach |
| 4:2 | 105-8367 | 2 | Pin-Locking |
| 4:3 | 3285-1 | 2 | Pin-Grooved |
| 4:4 | 105-0246 | 2 | Cam |
| 4:5 | 98-4694 | 2 | Spring-Compression |
| 4:6 | 104-5909 | 1 | Stop-RH |
| 4:7 | 302-5 | 2 | Fitting-Grease |
| 4:8 | 98-4871 | 1 | Bushing-Tension |
| 4:9 | 104-5903 | 1 | Stop-LH |

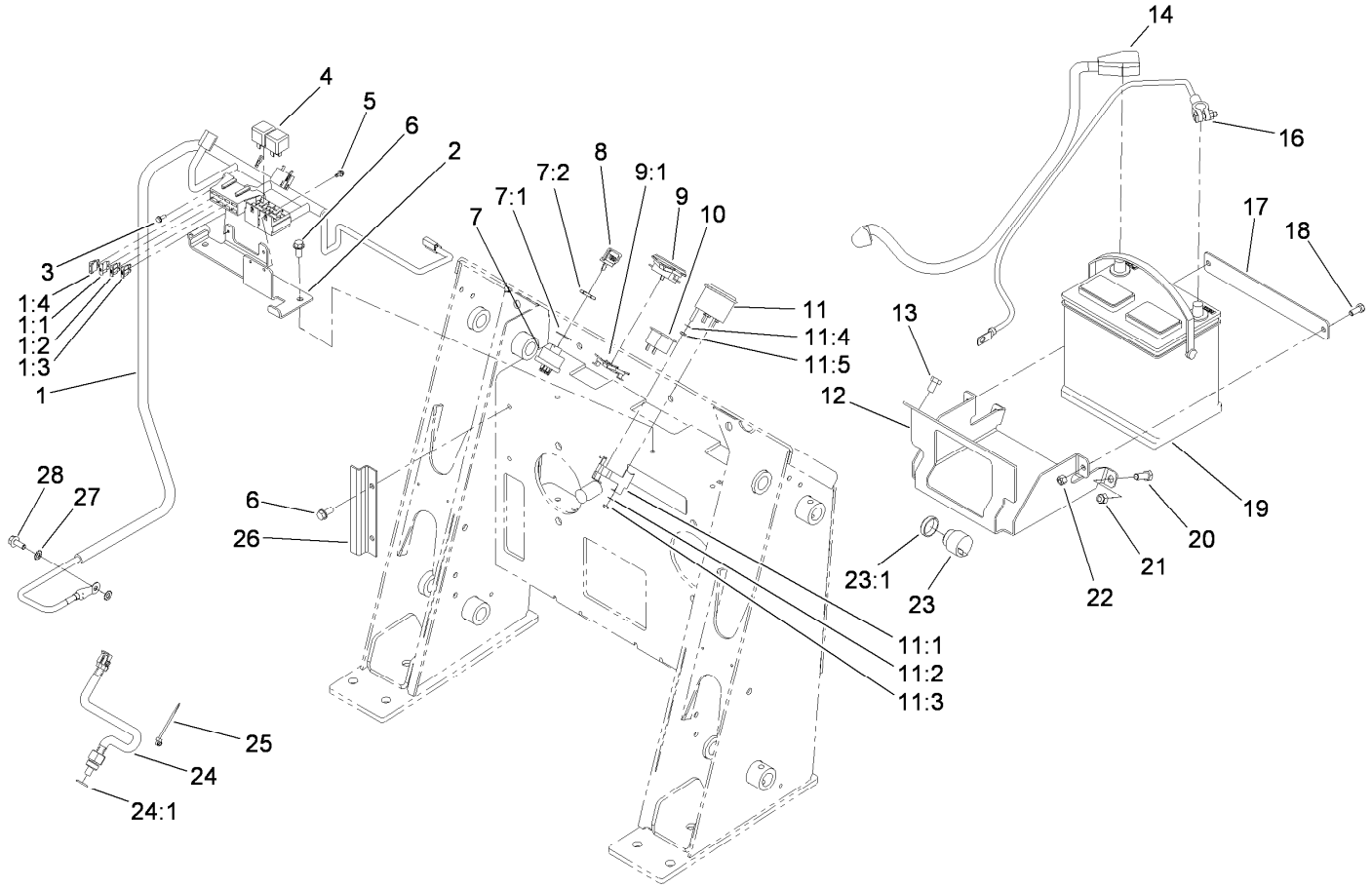


# Electrical System Assembly

| Ref. | Part Number | Qty. | Description |
|---|---|---|---|
| 1 | 115-0732 | 1 | Harness-Wire |
| 1:1 | 218-578 | 1 | Fuse-Blade, 10 Amp |
| 1:2 | 109102 | 1 | Fuse-Blade, 25 Amp |
| 1:3 | 109103 | 1 | Fuse-Blade, 30 Amp |
| 1:4 | 109355 | 1 | Fuse-Blade, 15 Amp |
| 2 | 106-2558-03 | 1 | Fuse/Relay Bracket ASM |
| 3 | 32144-112 | 2 | Screw-HWH |
| 4 | 98-7249 | 2 | Relay |
| 5 | 104-2065 | 2 | Screw-HWH |
| 6 | 32144-11 | 4 | Screw-HWH |
| 7 | 88-9830 | 1 | Key Switch ASM |
| 7:1 | 3254-5 | 1 | Washer-Lock |
| 7:2 | 218-461 | 1 | Nut-HH |
| 8 | 63-8360 | 3 | Key-Ignition |
| 9 | 104-7427 | 1 | Inductive Hourmeter ASM |
| 9:1 | 104-4234 | 1 | Clip-Mounting |
| 10 | 104-2839 | 1 | Light-Temp, Oil |
| 11 | 66-2940 | 1 | Gauge-Fuel |
| 11:1 | 100-6147 | 1 | Bracket-Mounting, Gauge |
| 11:2 | 3254-1 | 2 | Washer-Lock, Int |
| 11:3 | 3217-27 | 2 | Nut-Hex |
| 11:4 | 3255-24 | 3 | Washer-Lock / EXT |
| 11:5 | 3217-16 | 3 | Nut-Hex |
| 12 | 106-9390-01 | 1 | Tray-Mounting, Battery |
| 13 | 32144-69 | 2 | Screw-HWHTF |
| 14 | 106-5707 | 1 | Cable-Battery, Positive |
| 16 | 106-5708 | 1 | Cable-Battery, Negative |
| 17 | 105-0371-01 | 1 | Clamp-Battery |
| 18 | 322-3 | 2 | Screw-HH |
| 19 | 104-9979 | 1 | Battery |
| 20 | 323-6 | 2 | Screw-HH |
| 21 | 3296-39 | 2 | Nut-Lock, NI |
| 22 | 3296-29 | 2 | Nut-Lock, NI |
| 23 | 80-9330 | 1 | Audio Alarm ASM |
| 23:1 | 104-5107 | 1 | Nut-Plastic, Knurled |
| 24 | 98-2765 | 1 | Switch-Temperature |
| 24:1 | 237-79 | 1 | O-Ring |
| 25 | 3290-381 | 3 | Tie-Cable |
| 26 | 100-6117-01 | 1 | Shield-Wiring |
| 27 | 3255-8 | 2 | Washer-Lock |
| 28 | 33104-020 | 1 | Screw-HHF |

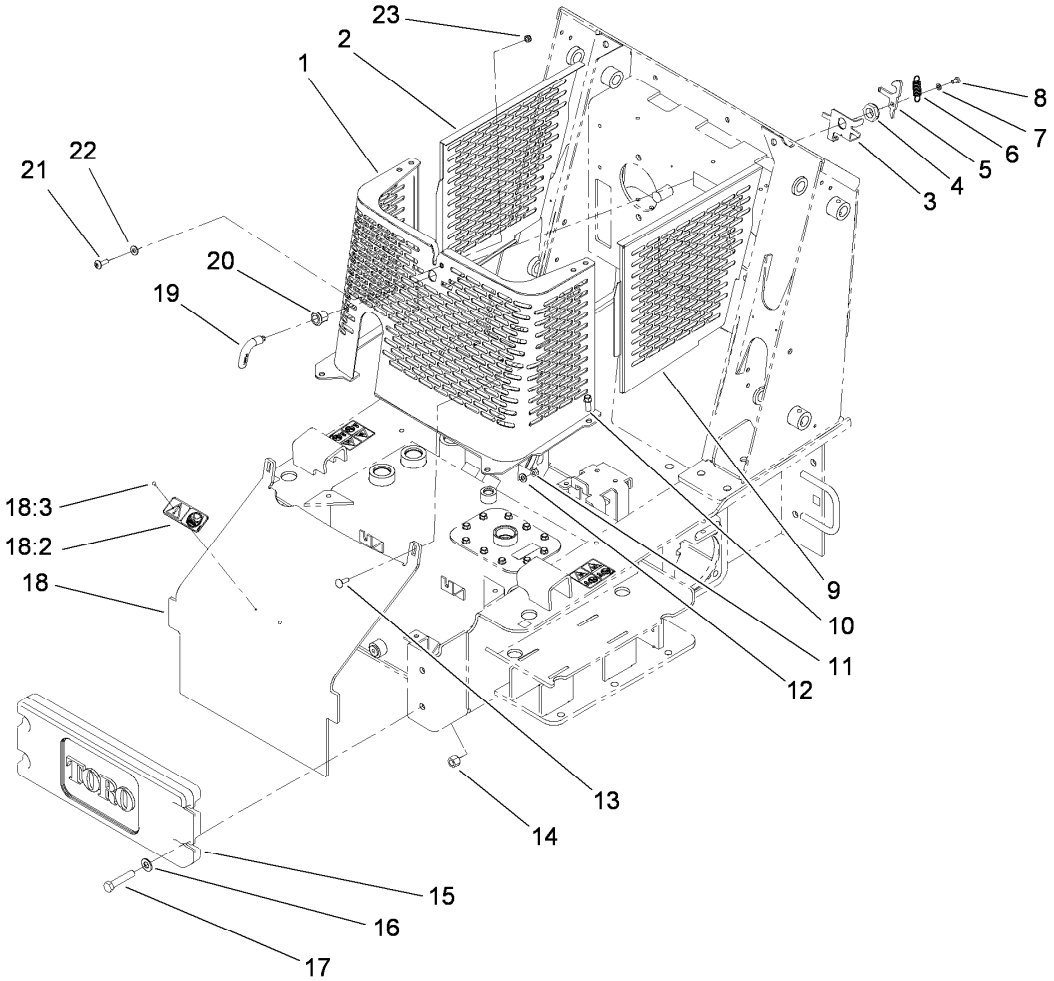


# Grill Assembly

| Ref. | Part Number | Qty. | Description |
|---|---|---|---|
| 1 | 117-1316-03 | 1 | Grill ASM |
| 2 | 106-5727-03 | 1 | Panel-Side, RH |
| 3 | 106-5729-03 | 1 | Bracket-Latch |
| 4 | 3296-60 | 1 | Nut-Lock, NI |
| 5 | 106-5728 | 1 | Cam-Latch |
| 6 | 104-0869 | 1 | Spring |
| 7 | 3253-3 | 1 | Washer-Lock |
| 8 | 321-2 | 1 | Screw-HH |
| 9 | 106-5726-03 | 1 | Panel-Side, LH |
| 10 | 95-1726 | 4 | Screw-Taptite |
| 11 | 3296-29 | 2 | Nut-Lock, NI |
| 12 | 3256-23 | 2 | Washer-Plain |
| 13 | 3230-28 | 2 | Screw-CARR |

| Ref. | Part Number | Qty. | Description |
|---|---|---|---|
| 14 | 3296-23 | 4 | Nut-Lock, NI |
| 15 | 99-6166-01 | 1 | Counterweight-Front |
| 16 | 3256-26 | 4 | Washer-Flat |
| 17 | 325-10 | 4 | Screw-HH |
| 18 | 108-4644 | 1 | Heat Shield ASM |
| 18:2 | 115-4882 | 1 | Plate-Hot Surface |
| 18:3 | 3269-31 | 2 | Rivet-Pop |
| 19 | 108-5639 | 1 | Handle-Latch |
| 20 | 106-9335 | 1 | Housing-Latch |
| 21 | 107-8021 | 1 | Screw-PTH |
| 22 | 3256-2 | 1 | Washer-Flat |
| 23 | 3296-47 | 1 | Nut-Lock,NI |

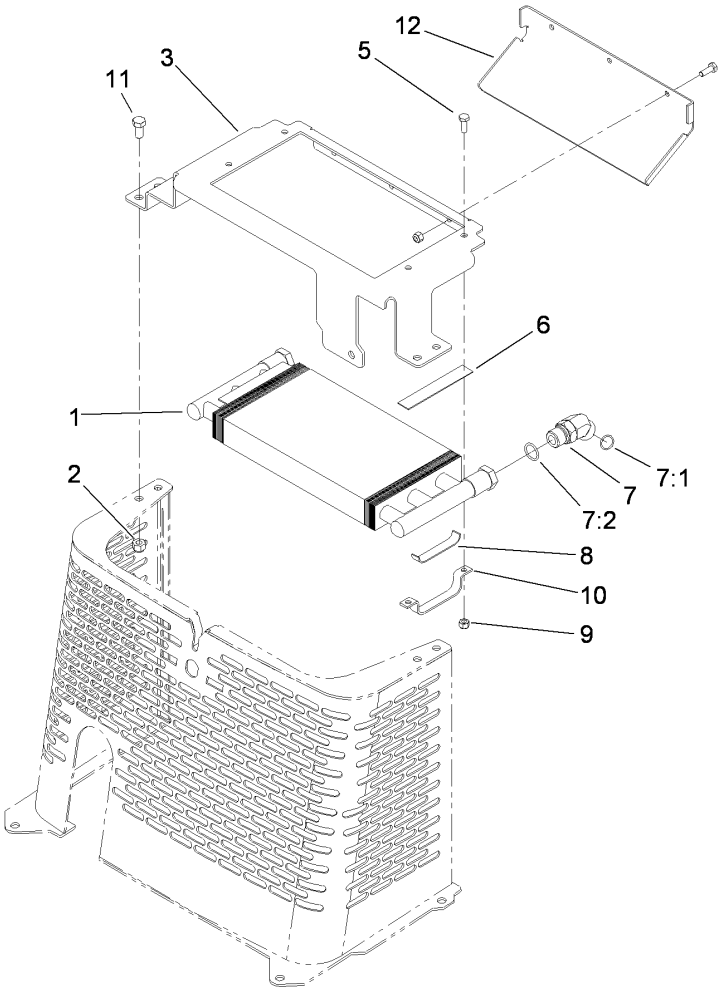


# Hydraulic Oil Cooler Assembly

| *Ref.* | *Part Number* | *Qty.* | *Description* |
|---|---|---|---|
| 1 | 105-0352 | 1 | Exchanger-Heat |
| 2 | 3296-39 | 4 | Nut-Lock, NI |
| 3 | 115-4801-03 | 1 | Bracket-Mounting, Cooler |
| 5 | 321-4 | 7 | Screw-HH |
| 6 | 94-9566 | 2 | Pad-Footrest |
| 7 | 340-14 | 2 | Fitting-HYD, 45 DEG |
| 7:1 | 237-65 | 1 | O-Ring |
| 7:2 | 237-80 | 1 | O-Ring |
| 8 | 104-2816 | 2 | Pad-Support |
| 9 | 3296-42 | 7 | Nut-Lock, NI |
| 10 | 104-2803 | 2 | Support-Cooler |
| 11 | 3234-42 | 4 | Screw-HHF |
| 12 | 115-0798-03 | 1 | Deflector-Cooler |

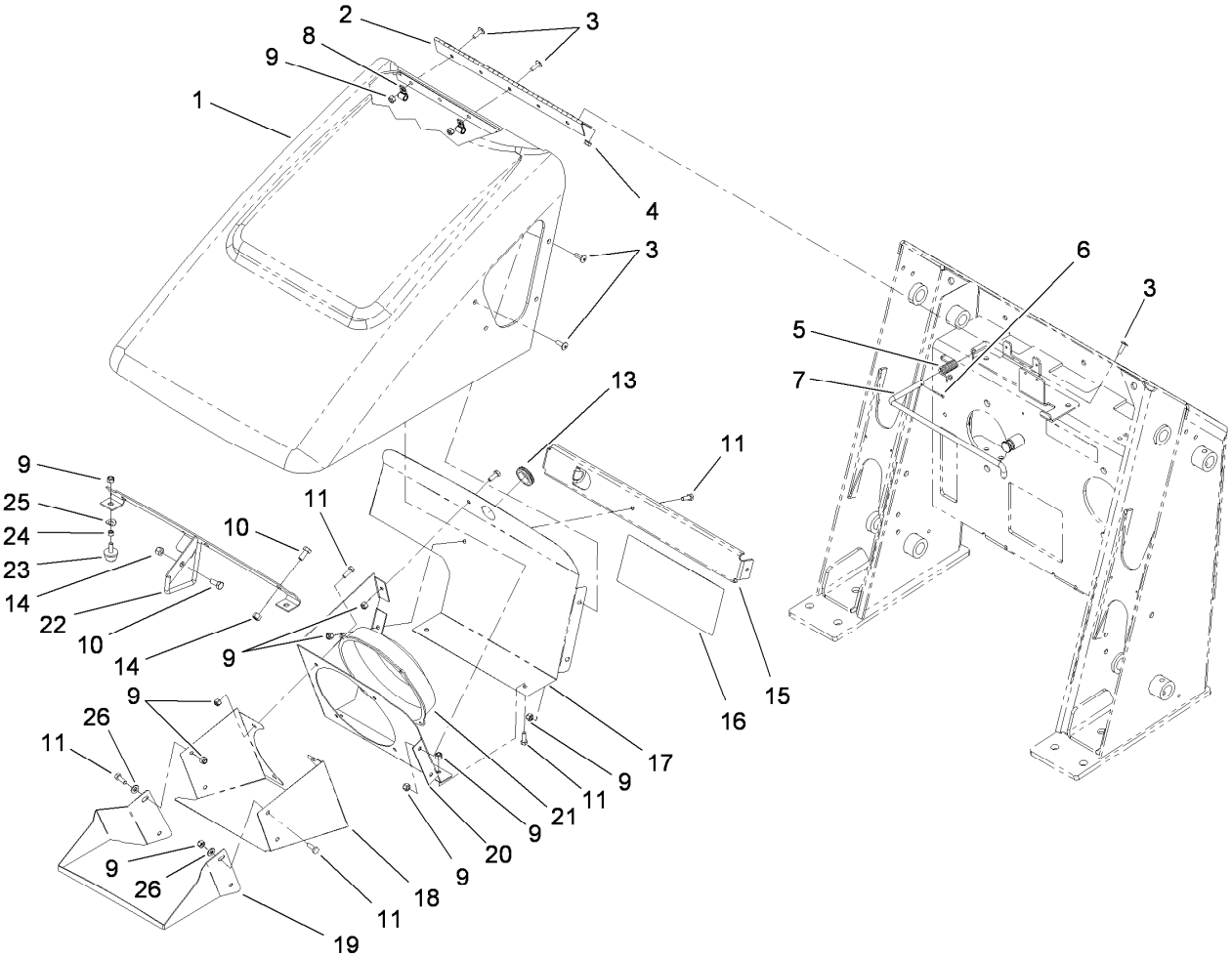


# Hood Assembly

| Ref. | Part Number | Qty. | Description |
|---|---|---|---|
| 1 | 114-8717 | 1 | Hood ASM |
| 2 | 100-1284 | 1 | Hinge-Hood |
| 3 | 9114604 | 14 | Screw-Head, Truss |
| 4 | 32128-33 | 4 | Nut-HF |
| 5 | 106-2584 | 1 | Spring-Torsion |
| 6 | 3272-6 | 1 | Pin-Cotter |
| 7 | 106-2554 | 1 | Rod-Support, Hood |
| 8 | 2412-91 | 2 | Clamp |
| 9 | 3296-42 | 24 | Nut-Lock, NI |
| 10 | 322-3 | 4 | Screw-HH |
| 11 | 321-4 | 12 | Screw-HH |
| 13 | 240-5 | 1 | Grommet |
| 14 | 3296-29 | 4 | Nut-Lock, NI |

| Ref. | Part Number | Qty. | Description |
|---|---|---|---|
| 15 | 115-4849-03 | 1 | Bracket-Support, Hood |
| 16 | 115-4848 | 1 | Decal-Service |
| 17 | 114-8715-03 | 1 | Bracket-Fan, Back |
| 18 | 114-8711-03 | 1 | Shroud-Fan |
| 19 | 114-8712-03 | 1 | Shroud-Fan, Front |
| 20 | 114-8714-03 | 1 | Bracket-Fan, Back |
| 21 | 104-2809 | 1 | Fan |
| 22 | 106-5717-03 | 1 | Rod Latch ASM |
| 23 | 1-523420 | 2 | Bumper |
| 24 | 106-9308 | 2 | Spacer |
| 25 | 3290-301 | 2 | Washer-Spring |
| 26 | 3256-22 | 2 | Washer-Flat |

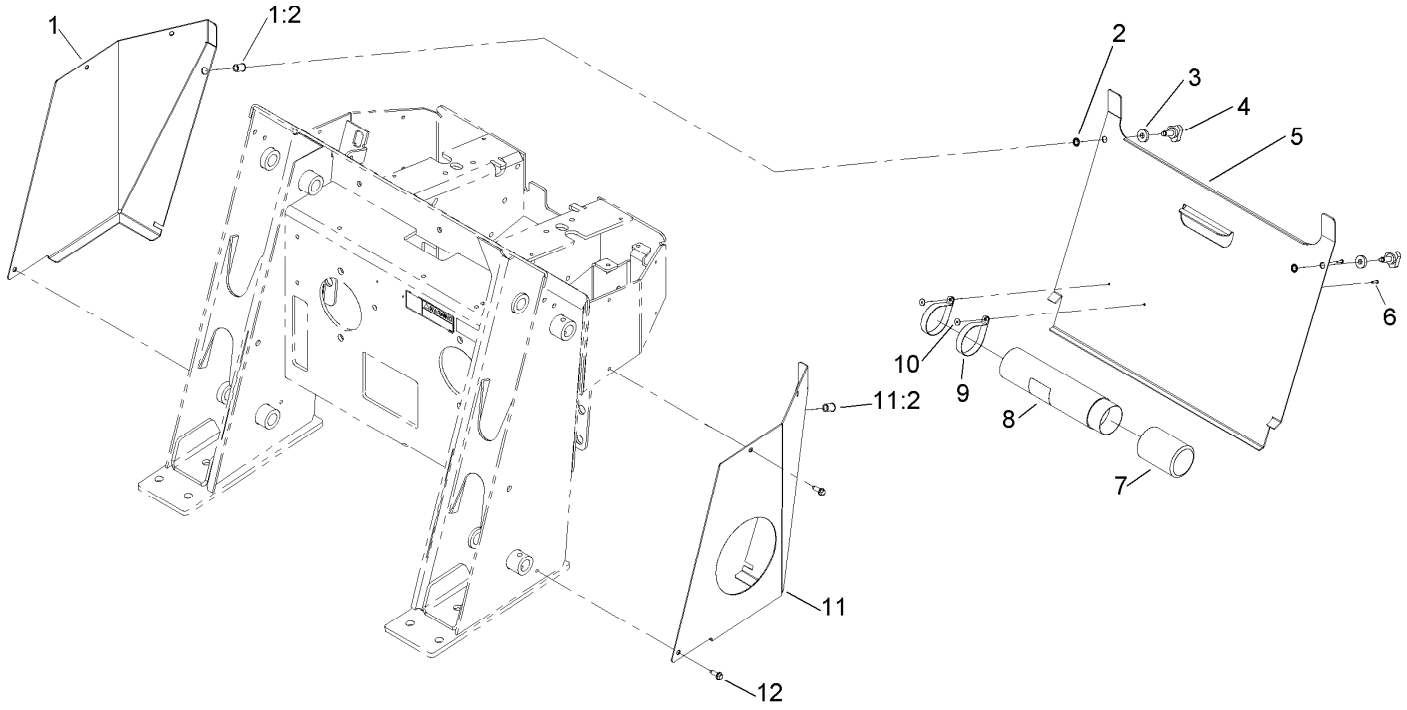


# Rear Access Cover Assembly

| *Ref.* | *Part Number* | *Qty.* | *Description* |
|---|---|---|---|
| 1 | 106-9342 | 1 | RH Rear Cover Support ASM |
| 1:2 | 32148-9 | 1 | Nut-Clinch |
| 2 | 32151-72 | 2 | Ring-Retaining |
| 3 | 106-0565 | 2 | Washer-Rubber |
| 4 | 95-9648 | 2 | Knob |
| 5 | 106-9339-01 | 1 | Cover-Access, Rear |
| 6 | 3269-17 | 2 | Rivet-Pop |
| 7 | 104-7048 | 1 | Cap-Housing |
| 8 | 104-7050 | 1 | Tube-Manual |
| 9 | 2412-120 | 2 | Clamp-R |
| 10 | 3269-10 | 2 | Washer-Back |
| 11 | 106-9343 | 1 | LH Rear Cover Support ASM |
| 11:2 | 32148-9 | 1 | Nut-Clinch |
| 12 | 9266714 | 6 | Screw-HWH |

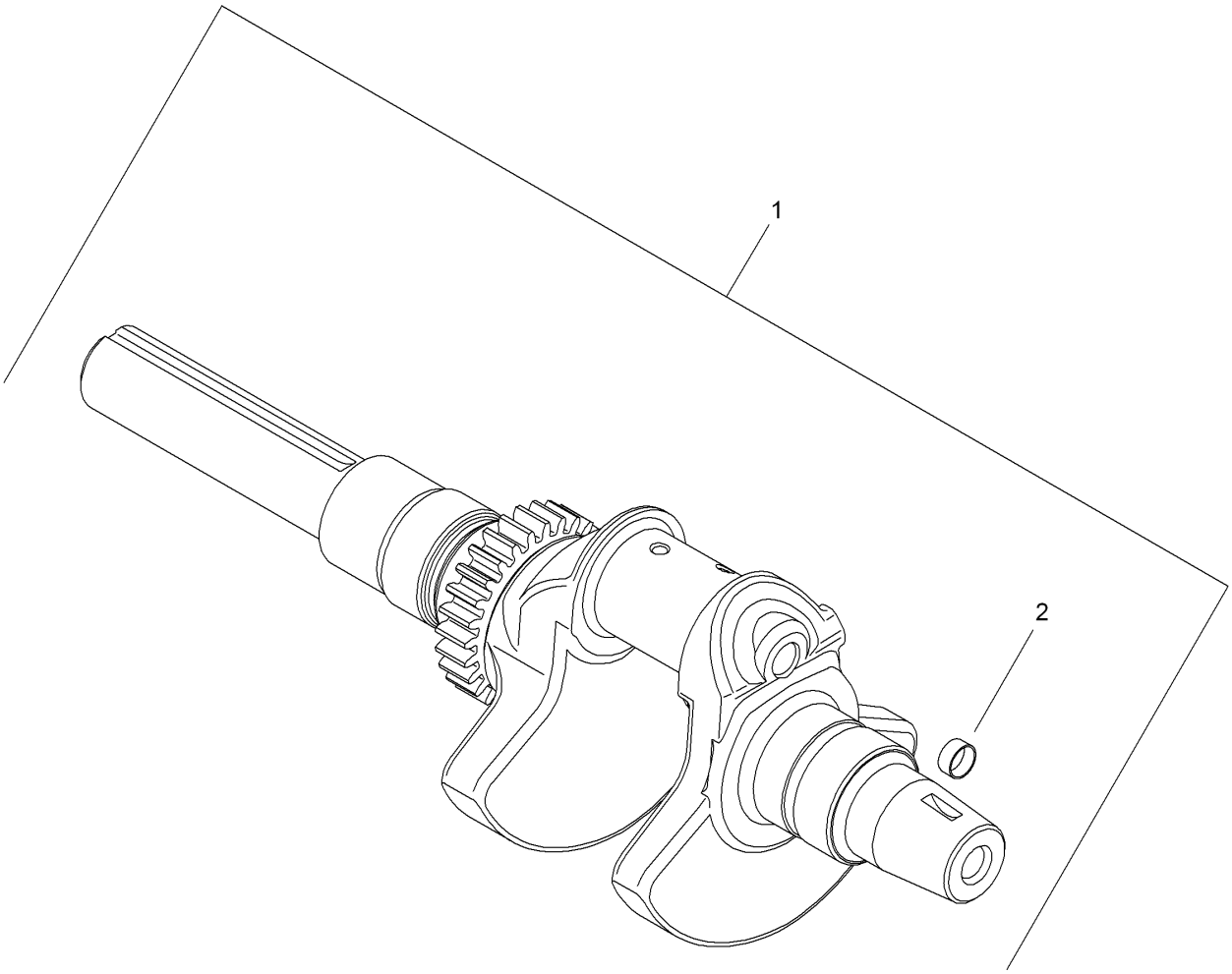


# Crankshaft Assembly
# Kohler CH740-3126

| Ref. | Part Number | Qty. | Description |
|---|---|---|---|
| 1 | 24 014 90-S | 1 | Crankshaft (Includes 2) ● |
| 2 | 52 139 09-S | 1 | Plug-Cup ● |

● Obtain parts from www.kohlerplus.com

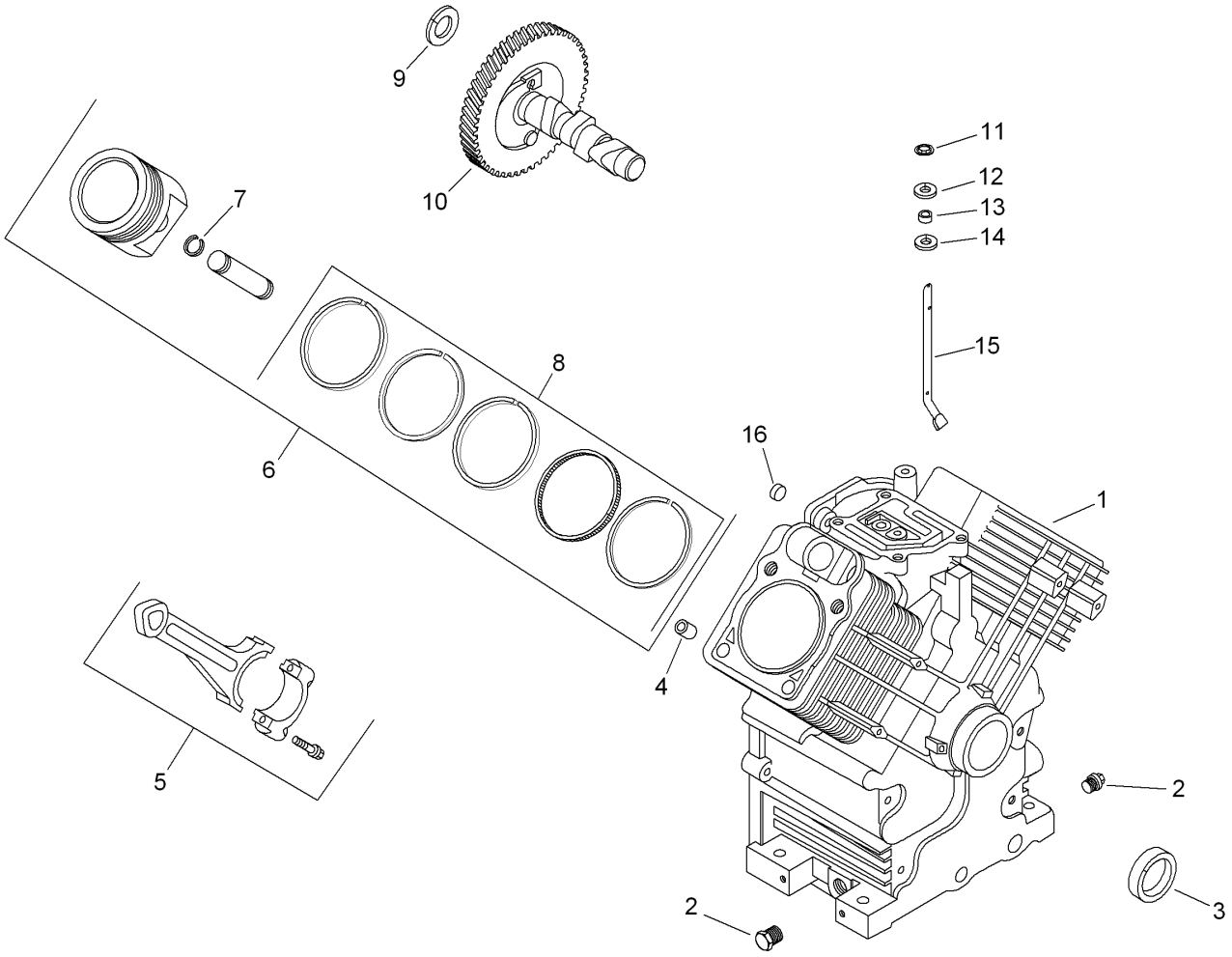


# Crankcase Assembly
# Kohler CH740-3126

| Ref. | Part Number | Qty. | Description |
|---|---|---|---|
| 1 | 24 782 32 | 1 | Mini Block (C I Bore) ■ |
| 2 | 52 139 02-S | 2 | Plug-Pipe Head, 3/8 ■ |
| 3 | 24 032 19-S | 1 | Seal-Oil (Helix Lip) ■ |
| 4 | 24 380 16-S | 6 | Pin-Locating ■ |
| 5 | 24 067 24-S | 2 | Rod-Connecting (STD) ■ |
| 5 | 24 067 25-S | 2 | Rod-Connecting (.25) ■ |
| 6 | 25 874 01-S | 2 | Piston And Ring Kit (STD) (Includes 7, 8) ■ |
| 6 | 24 874 27-S | 2 | Piston W/Ring Set (.08) ■ |
| 6 | 24 874 28-S | 2 | Piston W/Ring Set (.25) ■ |
| 6 | 24 874 29-S | 2 | Piston W/Ring Set (.50) ■ |
| 7 | 24 018 01-S | 4 | Retainer-Pin, Piston ■ |
| 8 | 24 108 14-S | 1 | Piston Ring Set (STD) ■ |
| 8 | 24 108 15-S | 1 | Piston Ring Set (.08) ■ |
| 8 | 24 108 16-S | 1 | Piston Ring Set (.25) ■ |
| 8 | 24 108 17-S | 1 | Piston Ring Set (.50) ■ |
| 9 | 12 422 07-S | 1 | Shim-Camshaft (White .028) ■ |
| 9 | 12 422 08-S | 1 | Shim-Camshaft (Blue .03) ■ |
| 9 | 12 422 09-S | 1 | Shim-Camshaft (Red .032) ■ |
| 9 | 12 422 10-S | 1 | Shim-Camshaft (Yellow .034) ■ |
| 9 | 12 422 11-S | 1 | Shim-Camshaft (Green .036) ■ |
| 9 | 12 422 12-S | 1 | Shim-Camshaft (Gray .038) ■ |
| 9 | 12 422 13-S | 1 | Shim-Camshaft (Black .04) ■ |
| 10 | 24 012 18-S | 1 | Camshaft Kit (Includes 25 357 14-S) ■ |
| 11 | 24 018 09-S | 1 | Retainer-Ring ■ |
| 12 | M-931010-S | 1 | Washer-Flat (9MM) ■ |
| 13 | 28 032 09-S | 1 | Seal-Cross Shaft, Governor ■ |
| 14 | 24 468 15-S | 1 | Washer-Flat (11/32) ■ |
| 15 | 24 144 38-S | 1 | Shaft-Cross, Governor ■ |
| 16 | 52 139 09-S | 1 | Plug-Cup ■ |
| | 25 357 14-S | 1 | Lubricant-Camshaft ● ■ |
| | 24 755 158-S | 1 | Gasket Set ● ■ |

● Not illustrated

■ Obtain parts from www.kohlerplus.com

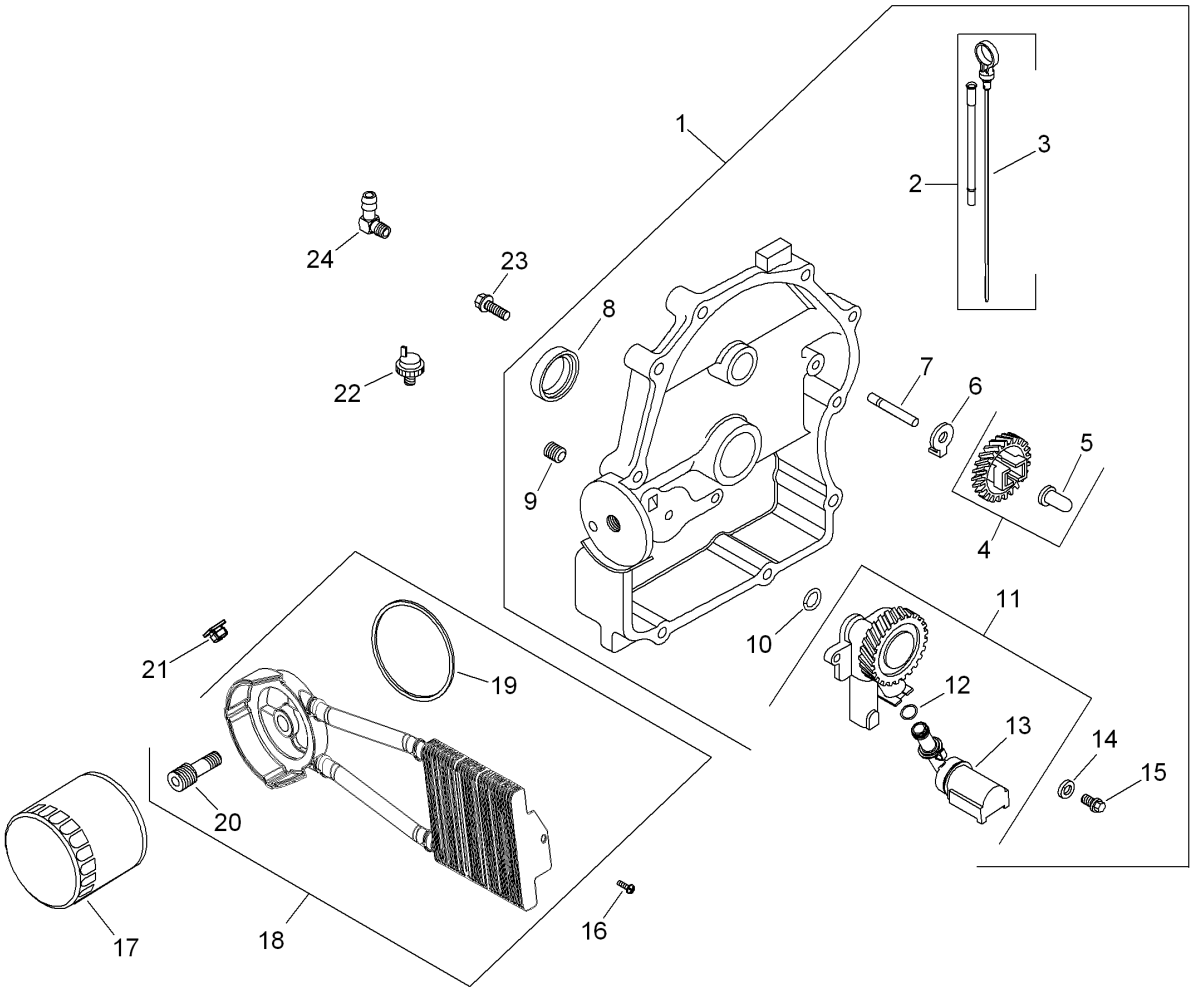


# Oil Pan and Lubrication Assembly Kohler CH740-3126

| Ref. | Part Number | Qty. | Description |
|---|---|---|---|
| 1 | 66 009 08-S | 1 | Closure Plate ASM (Includes 2-15) ● |
| 2 | 24 755 121-S | 1 | Dipstick And Dipstick Tube ASM (Includes 3) ● |
| 3 | 24 038 10-S | 1 | Dipstick ● |
| 4 | 24 043 12-S | 1 | Governor Gear W/Pin Kit (Includes 5) ● |
| 5 | 12 380 01-S | 1 | Pin-Regulating, Governor ● |
| 6 | 24 448 02-S | 1 | Tab-Locking ● |
| 7 | 12 144 02-S | 1 | Shaft-Gear, Governor ● |
| 8 | 25 032 06-S | 1 | Seal-Oil ● |
| 9 | 25 139 60-S | 1 | Plug-Pipe, Countersunk (1/8) ● |
| 10 | 24 153 08-S | 1 | O-Ring ● |
| 11 | 24 393 51-S | 1 | Oil Pump ASM (Includes 12, 13) ● |
| 12 | 24 153 01-S | 1 | O-Ring (Oil Pick-Up) ● |
| 13 | 24 381 04-S | 1 | Tube-Pick Up, Oil ● |
| 14 | M-631005-S | 2 | Washer-Flat (6 MM) ● |
| 15 | M-645025-S | 2 | Screw-Flange, Thread Forming (M6X1.0X25) ● |
| 16 | 24 086 12-S | 2 | Screw-TAP (M6X1.7X18) ● |
| 17 | 52 050 02-S | 1 | Filter-Oil ● |
| 18 | 54 755 21-S | 1 | Oil Cooler Kit (Metal) (Includes 19, 10) ● |
| 19 | 24 153 21-S | 1 | O-Ring ● |
| 20 | 24 136 05-S | 1 | Nipple-Filter, Oil ● |
| 21 | 25 100 37-S | 2 | Nut-Plastic (Black) ● |

● Obtain parts from www.kohlerplus.com

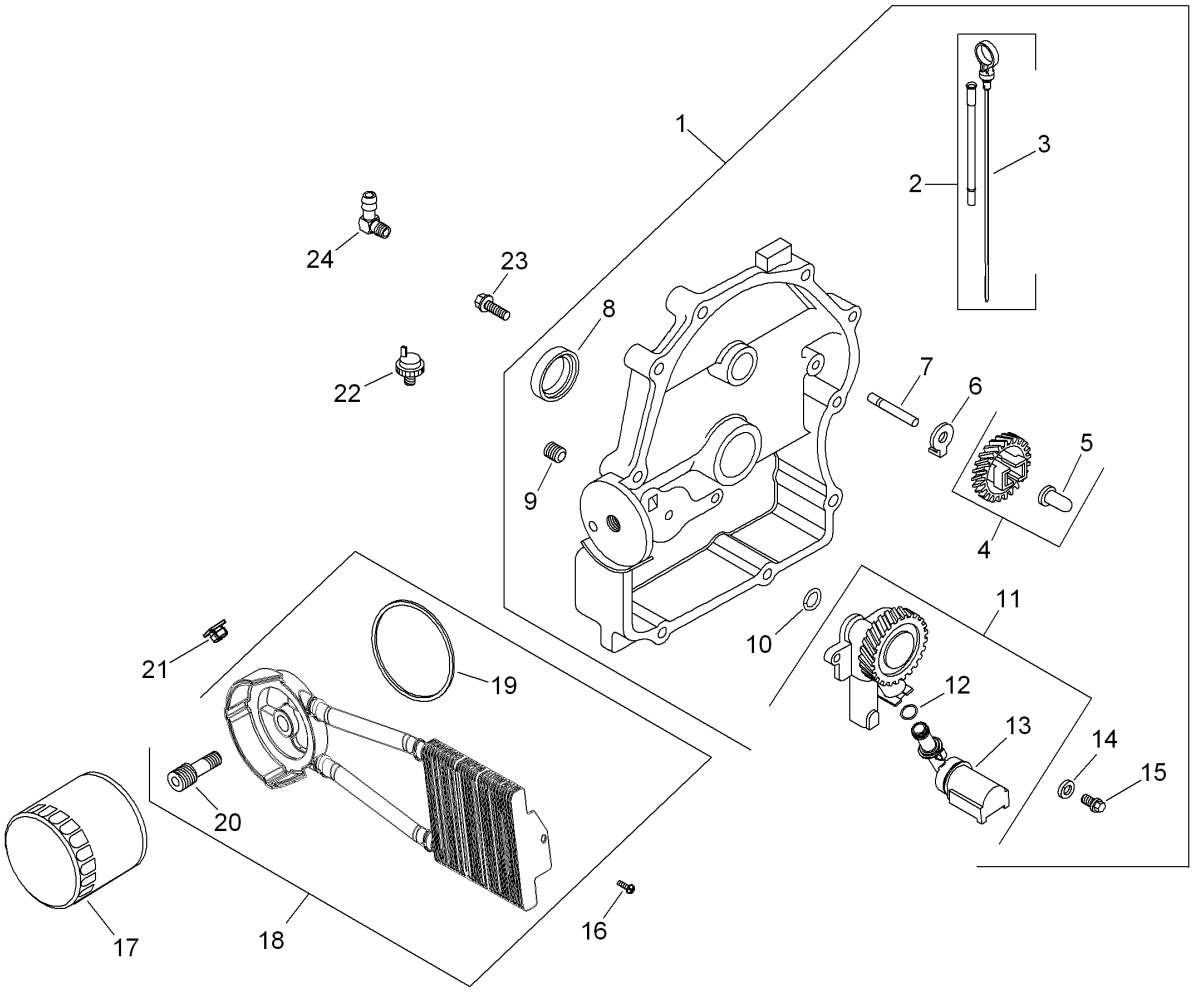


# Oil Pan and Lubrication Assembly Kohler CH740-3126 (continued)

| Ref. | Part Number | Qty. | Description |
|---|---|---|---|
| 22 | 24 099 03-S | 1 | Switch-Pressure, Oil ● |
| 23 | 24 086 17-S | 10 | Screw-Flange (M8X1.25X45) ● |
| 24 | 25 155 02-S | 1 | Connector-Hose, 90 Deg ● |

● Obtain parts from www.kohlerplus.com

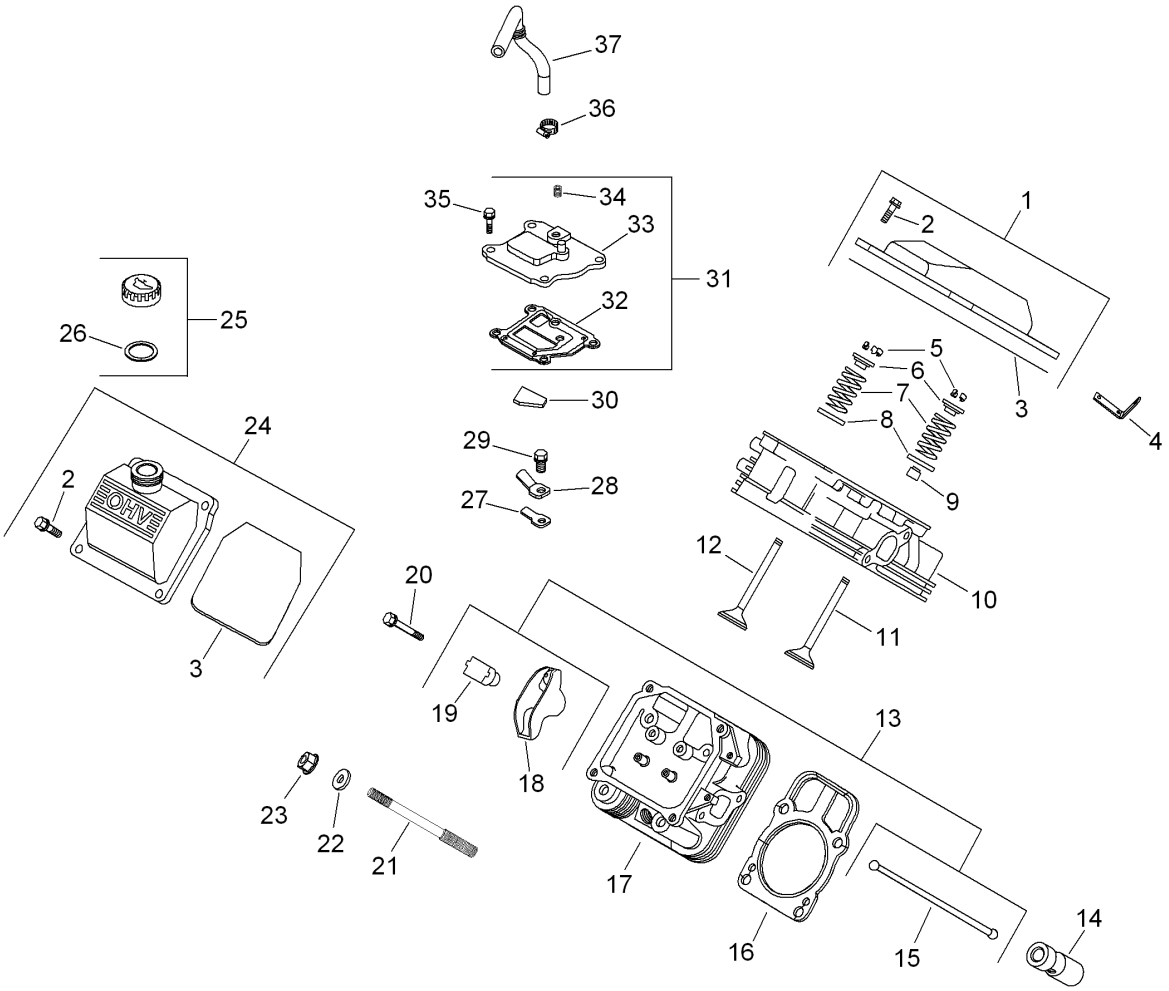


# Head, Valve and Breather Assembly
# Kohler CH740-3126

| Ref. | Part Number | Qty. | Description |
|---|---|---|---|
| 1 | 24 755 141-S | 1 | Plain Rocker Cover Kit (Includes 2, 3) ■ |
| 2 | M-651030-S | 8 | Screw-Flange (M6X1.0X30) ■ |
| 3 | 24 153 30-S | 2 | O-Ring ■ |
| 4 | 25 445 01-S | 1 | Strap-Lifting ■ |
| 5 | 12 755 03-S | 4 | Retainer Kit ■ |
| 6 | 12 173 01-S | 4 | Cap-Spring, Valve ■ |
| 7 | 24 089 02-S | 4 | Spring-Valve ■ |
| 8 | 235011-S | 4 | Retainer-Spring ■ |
| 9 | 66 032 05-S | 2 | Seal-Stem, Valve ■ |
| 10 | 24 318 106-S | 1 | Cylinder Head No.1 ASM (Includes 25 072 04-S) ■ |
| 11 | 24 017 01-S | 2 | Valve-Intake (STD) ■ |
| 11 | 24 017 02-S | 2 | Valve-Intake (.25) ■ |
| 12 | 24 016 01-S | 2 | Valve-Exhaust (STD) ■ |
| 12 | 24 016 02-S | 2 | Valve-Exhaust (.25) ■ |
| 13 | 24 755 66-S | 1 | Valve Train Kit (Includes 15,18 And 19) ■ |
| 14 | 25 351 04-S | 4 | Hydraulic Valve Lifter Kit (Includes 25 357 14-S) ■ |
| 15 | 24 411 05-S | 4 | Rod-Push ■ |
| 16 | 24 841 03-S | 2 | Cylinder Head Gasket Kit ■ |
| 17 | 24 318 114-S | 1 | Cylinder Head No.2 ASM (Includes 25 072 04-S) ■ |
| 18 | 25 186 01-S | 4 | Arm-Rocker ■ |
| 19 | 24 599 02-S | 4 | Pivot-Arm, Rocker ■ |
| 20 | M-640034-S | 4 | Screw-Flange (M6X1.0X34) ■ |
| 21 | 24 072 09-S | 8 | Stud (M8X1.25Xm10X1.5X105MM) ■ |
| 22 | 24 468 16-S | 8 | Washer-Flat (8.6 MM) ■ |
| 23 | 24 100 10-S | 8 | Nut-Flange (M8X1.25) ■ |
| 24 | 24 755 140-S | 1 | Oil Fill Rocker Cover Kit (Includes 2, 3) ■ |
| 25 | 24 755 46-S | 1 | Oil Fill Cap Kit (Yellow) (Includes 26) ■ |
| 26 | 25 153 02-S | 1 | O-Ring (Dipstick) ■ |
| 27 | 24 402 03-S | 1 | Reed-Breather ■ |
| 28 | 66 018 04-S | 1 | Retainer-Reed ■ |
| 29 | M-545010-S | 1 | Screw-HHFTF (M5X.80X10) ■ |
| 30 | 24 050 11-S | 1 | Filter-Breather ■ |
| 31 | 24 033 01-S | 1 | Breather ASM (Includes 32, 33) ■ |

● Not illustrated

■ Obtain parts from www.kohlerplus.com

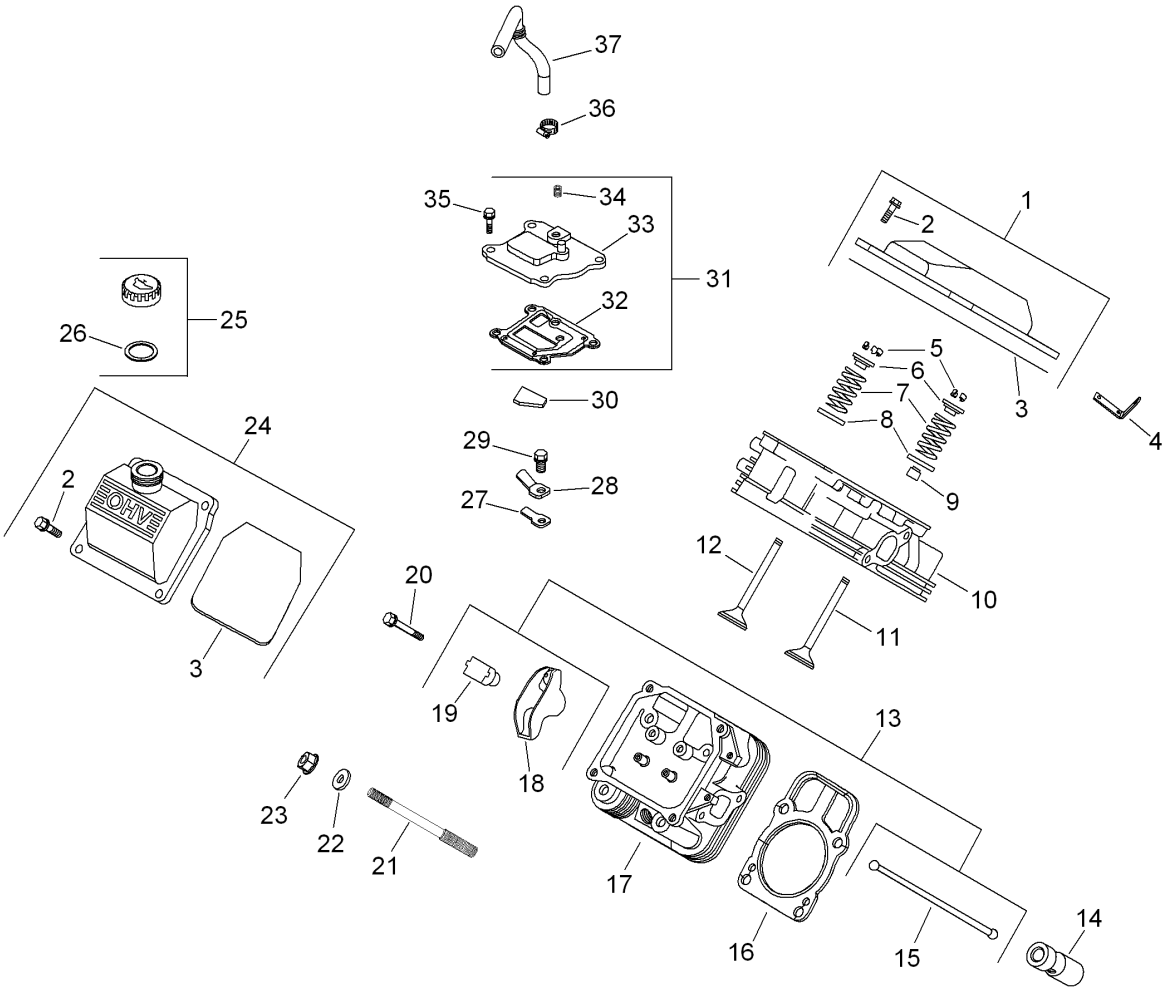


# Head, Valve and Breather Assembly Kohler CH740-3126 (continued)

| Ref. | Part Number | Qty. | Description |
|---|---|---|---|
| 32 | 24 041 51-S | 1 | Gasket-Breather ■ |
| 33 | 24 096 86-S | 1 | Cover-Breather ■ |
| 34 | 25 139 60-S | 1 | Plug-Pipe, Countersunk (1/8) ■ |
| 35 | M-645020-S | 4 | Screw-HHFTF (M6X1.0X20) ■ |
| 36 | 25 237 14-S | 1 | Clamp-Hose, Spring (1/2) ■ |

| Ref. | Part Number | Qty. | Description |
|---|---|---|---|
| 37 | 24 326 89-S | 1 | Hose-Breather ■ |
| | 24 755 147-S | 2 | Cylinder Head Hardware Kit (Services 1 Head-Qtys For Both Heads) (Includes 5-9, 11, 12, 15, 18-20) ●■ |
| | 25 357 14-S | 1 | Lubricant-Camshaft ●■ |
| | 25 072 04-S | 2 | Stud (M8X1.25X33) ●■ |

● Not illustrated

■ Obtain parts from www.kohlerplus.com

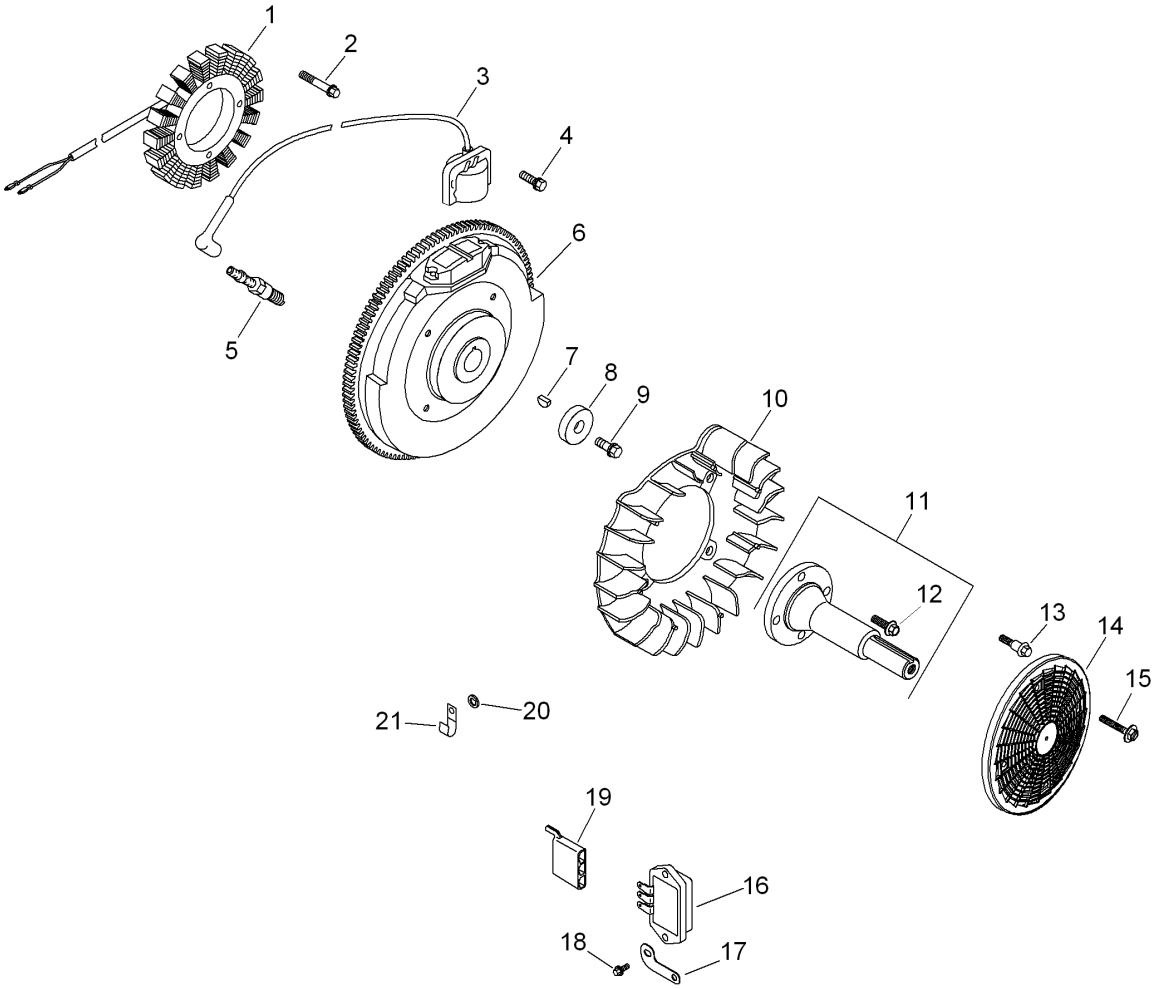


# Ignition and Electrical Assembly
# Kohler CH740-3126

| Ref. | Part Number | Qty. | Description |
|---|---|---|---|
| 1 | 237878-S | 1 | 15 Amp Stator Kit (Includes 25 452 01-S) ■ |
| 2 | M-548025-S | 2 | Screw-Thread Forming (M5X0.8X25) ■ |
| 3 | 24 584 52-S | 2 | Module Spark Adv (D S A I) ASM ■ |
| 4 | M-545020-S | 4 | Screw-Flange, Thread Forming (M5X.8X20) ■ |
| 5 | 25 132 12-S | 2 | Spark Plug (Pro Series) ■ |
| 6 | 24 025 58-S | 1 | Flywheel ASM (L W) ■ |
| 7 | X-42-15-S | 1 | Key (3/16 X 5/8) ■ |
| 8 | 12 468 03-S | 1 | Washer-Flat (13/32) ■ |
| 9 | 12 086 14-S | 1 | Screw-Flange (M10X1.5X45) ■ |
| 10 | 24 157 11-S | 1 | Fan ■ |
| 11 | 24 144 13-S | 1 | Shaft-Drive, Front ■ |
| 12 | M-839025-S | 4 | Screw-HF (M8X1.25X25) ■ |
| 13 | 25 086 47-S | 4 | Bolt-Shoulder (M6X1.0X16) ■ |
| 14 | 24 162 34-S | 1 | Screen-Grass ■ |
| 15 | 25 086 117-S | 4 | Screw-Flange, Sems (M4X.7X25) ■ |
| 16 | 41 403 09-S | 1 | Rectifier-Regulator ■ |
| 17 | 24 126 137-S | 1 | Bracket-Strap, Ground ■ |
| 18 | 25 086 157-S | 2 | Screw-Hex Flange, Hi-Lo ■ |
| 19 | 25 155 41-S | 1 | Connector (3 Contact) ■ |
| 20 | X-25-63-S | 1 | Washer-Flat (1/4) ■ |
| 21 | 235173-S | 1 | Clip-Cable ■ |
| | 24 176 132-S | 1 | Harness-Wiring, D S A I ● ■ |
| | 24 176 42-S | 1 | Harness-Wiring ● ■ |
| | 25 086 91-S | 2 | Screw-Wsh HD Tap (8-18X.50) ● ■ |
| | 25 454 07-S | 2 | Tie-Wire ● ■ |
| | 25 452 01-S | 2 | Terminal ● ■ |

● Not illustrated

■ Obtain parts from www.kohlerplus.com

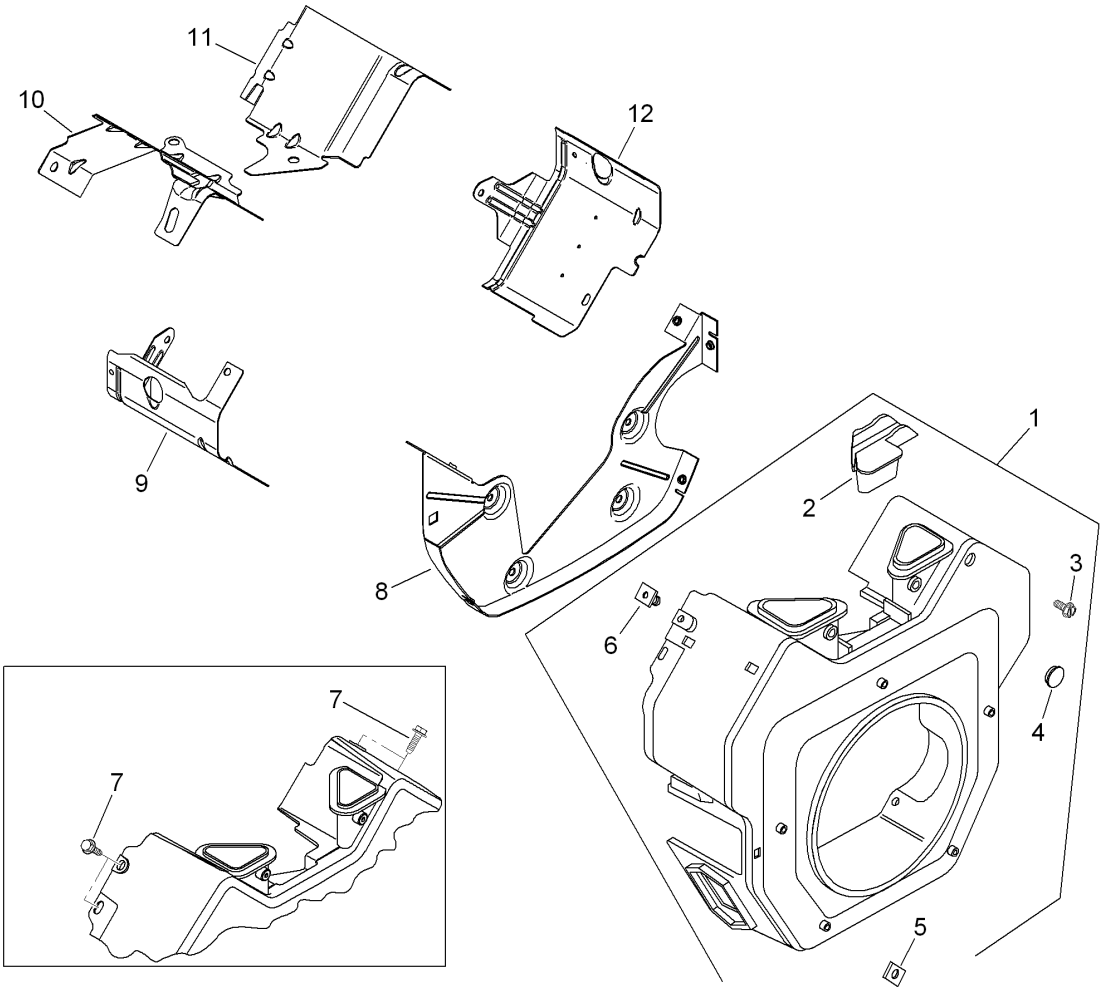


# Blower Housing and Baffle Assembly Kohler CH740-3126

| Ref. | Part Number | Qty. | Description |
|---|---|---|---|
| 1 | 24 027 195-S | 1 | Blower Housing ASM (Includes 2-6 And 41 037 10-S) ■ |
| 2 | 24 096 85-S | 1 | Cover-Housing, Blower ■ |
| 3 | 25 086 91-S | 1 | Screw-Wsh HD Tap (8-18X.50) ■ |
| 4 | 25 139 16-S | 1 | Plug-Button (9/16) ■ |
| 5 | 24 100 02-S | 2 | Nut-Plastic ■ |
| 6 | 24 100 01-S | 3 | Nut-Plastic ■ |
| 7 | M-645016-S | 6 | Screw-Flange, Thread Forming (M6X1.0X16) ■ |
| 8 | 24 146 55-S | 1 | Backing Plate Kit (Includes 25 154 11-S) ■ |
| 9 | 24 063 88-S | 1 | Baffle-Barrel, Cylinder (No. 2 Side) ■ |
| 10 | 24 063 70-S | 1 | Baffle-Valley (No. 2 Side) ■ |
| 11 | 24 063 59-S | 1 | Baffle-Valley (No. 1 Side) ■ |
| 12 | 24 063 85-S | 1 | Barrel-Cylinder (No.1 Side) ■ |
| | M-561016-S | 1 | Screw-Flange, Thread Forming (M5X.80X16) ● ■ |
| | M-545016-S | 4 | Screw-Flange, Thread Forming (M5X0.8X16) ● ■ |
| | M-545020-S | 4 | Screw-Flange, Thread Forming (M5X.8X20) ● ■ |
| | M-545010-S | 2 | Screw-HHFTF (M5X.80X10) ● ■ |
| | 41 037 10-S | 1 | Nameplate-Service ● ■ |

● Not illustrated

■ Obtain parts from www.kohlerplus.com

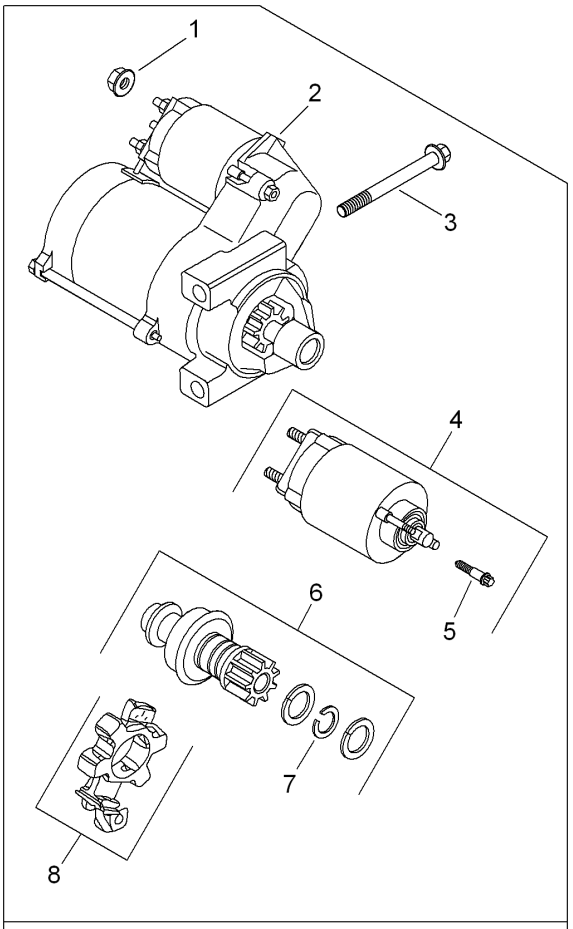


25 098 11-S (Delco)

# Starting System Assembly Kohler CH740-3126

| Ref. | Part Number | Qty. | Description |
|---|---|---|---|
| 1 | M-841080-S | 1 | Nut-Flange (M8X1.25) ● |
| 2 | 25 098 11-S | 1 | Starter ASM (Solenoid Shift) ● |
| 3 | M-851080-S | 2 | Screw-Flange (M8X1.25X80) ● |
| 4 | 25 435 06-S | 1 | Solenoid Kit (Includes 5) ● |
| 5 | 25 086 113-S | 3 | Screw-Torx Head, External ● |
| 6 | 25 755 33-S | 1 | Starter Pinion Kit (Includes 7) ● |
| 7 | 25 141 05-S | 1 | Ring-Retaining ● |
| 8 | 25 221 01-S | 1 | Brush Holder Kit ● |

● Obtain parts from www.kohlerplus.com

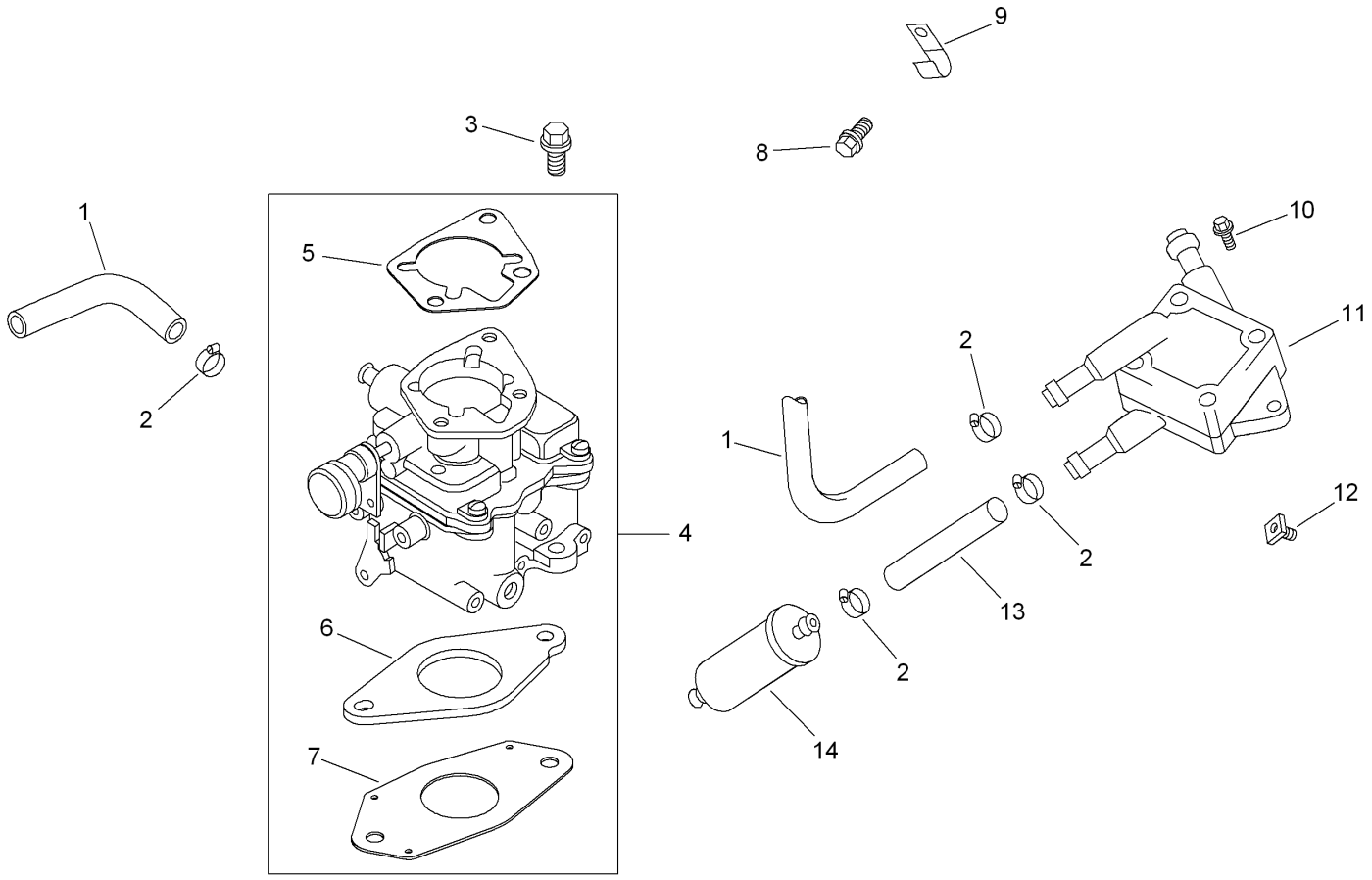


# Fuel System Assembly
# Kohler CH740-3126

| Ref. | Part Number | Qty. | Description |
|---|---|---|---|
| 1 | 25 111 34-S | 1 | Line-Fuel (24.0 Cut To Length) ■ |
| 2 | 25 237 14-S | 6 | Clamp-Hose, Spring (1/2) ■ |
| 3 | M-651030-S | 2 | Screw-Flange (M6X1.0X30) ■ |
| 4 | 24 853 93-S | 1 | Carburetor Kit W/Gaskets (Includes 5-7) ■ |
| 5 | 24 041 06-S | 1 | Gasket-Base, Air Cleaner ■ |
| 6 | 24 041 17-S | 1 | Gasket-Carburetor ■ |
| 7 | 24 041 53-S | 1 | Gasket-Carburetor ■ |
| 8 | 25 086 158-S | 1 | Screw-Flanged, Thread Forming (M6X1.0X11) ■ |
| 9 | 47 154 01-S | 1 | Clip-Cable ■ |
| 10 | 24 086 12-S | 2 | Screw-TAP (M6X1.7X18) ■ |
| 11 | 24 393 16-S | 1 | Pump-Fuel ■ |
| 12 | 25 100 37-S | 2 | Nut-Plastic (Black) ■ |
| 13 | 24 353 02-S | 1 | Line-Fuel, Flexible (15.5) ■ |
| 14 | 24 050 13-S | 1 | Filter-Fuel ■ |
| | 24 755 137-S | 1 | High Altitude Kit (10,000+ Ft) ● ■ |
| | 24 757 07-S | 1 | Choke Repair Kit ● ■ |
| | 24 757 02-S | 1 | Float Repair Kit ● ■ |
| | 24 757 01-S | 1 | Solenoid Repair Kit ● ■ |
| | 24 757 03-S | 1 | Carburetor Repair Kit ● ■ |
| | 24 757 08-S | 1 | Accelerator Pump Repair Kit ● ■ |
| | 24 757 09-S | 1 | Accelerator Pump Seal Repair Kit ● ■ |
| | 24 755 138-S | 1 | High Altitude Kit (5-10,000 Ft) ● ■ |

● Not illustrated

■ Obtain parts from www.kohlerplus.com

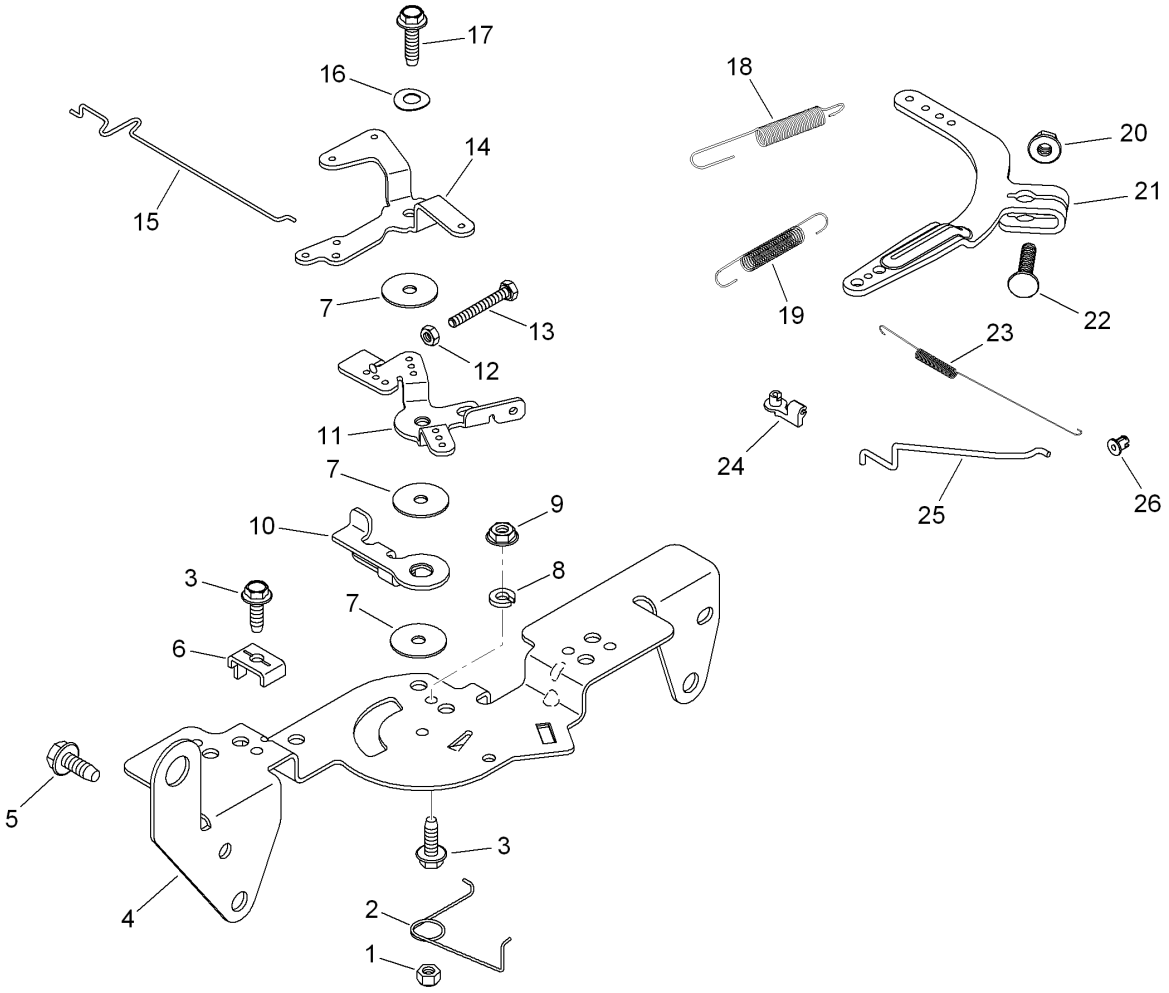


# Engine Control Assembly
# Kohler CH740-3126

| Ref. | Part Number | Qty. | Description |
|---|---|---|---|
| 1 | M-547050-S | 1 | Nut-Lock (M5X.8) ● |
| 2 | 24 089 03-S | 1 | Spring-Return, Choke ● |
| 3 | M-545016-S | 3 | Screw-Flange, Thread Forming (M5X0.8X16) ● |
| 4 | 24 126 56-S | 1 | Bracket-Control ● |
| 5 | M-645016-S | 4 | Screw-Flange, Thread Forming (M6X1.0X16) ● |
| 6 | 12 237 01-S | 2 | Clamp-Cable ● |
| 7 | 24 468 01-S | 3 | Washer-Flat (5.5MM) ● |
| 8 | X-20-1-S | 1 | Washer-Lock (.25) ● |
| 9 | M-541050-S | 1 | Nut-HF (M5X0.8) ● |
| 10 | 24 090 07-S | 1 | Lever-Actuator, Throttle ● |
| 11 | 24 090 03-S | 1 | Lever-Control, Throttle ● |
| 12 | M-446030-S | 1 | Nut (M4X0.7) ● |
| 13 | M-401030-S | 1 | Screw (M4X0.7X30) ● |
| 14 | 24 090 05-S | 1 | Lever-Choke ● |

| Ref. | Part Number | Qty. | Description |
|---|---|---|---|
| 15 | 24 079 21-S | 1 | Linkage-Choke ● |
| 16 | 41 468 03-S | 1 | Washer-Spring (1/4) ● |
| 17 | M-545020-S | 1 | Screw-Flange, Thread Forming (M5X.8X20) ● |
| 18 | 24 089 51-S | 1 | Spring-Limiter, Throttle ● |
| 19 | 24 089 44-S | 1 | Spring-Governor ● |
| 20 | M-641060-S | 1 | Nut-Flange (M6X1.0) ● |
| 21 | 24 090 51-S | 1 | Lever-Governor ● |
| 22 | 24 211 03-S | 1 | Bolt-Sq Neck, Rd HD (M6X1.0X25) ● |
| 23 | 24 089 01-S | 1 | Spring-Linkage ● |
| 24 | 25 158 11-S | 1 | Bushing-Retaining, Linkage ● |
| 25 | 24 079 01-S | 1 | Linkage-Throttle ● |
| 26 | 25 158 08-S | 1 | Bushing-Linkage, Throttle ● |

● Obtain parts from www.kohlerplus.com

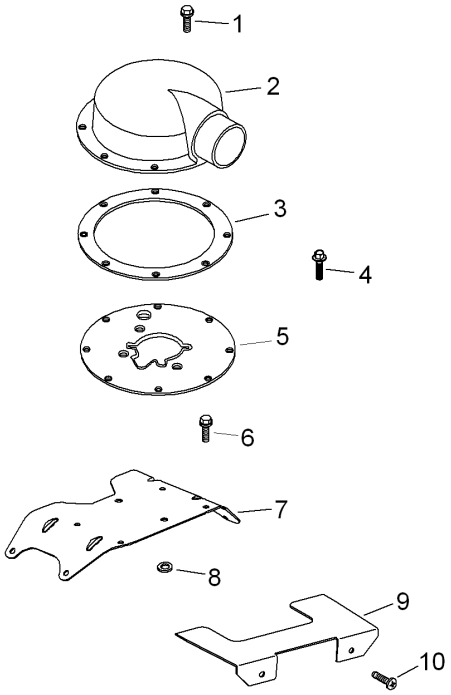


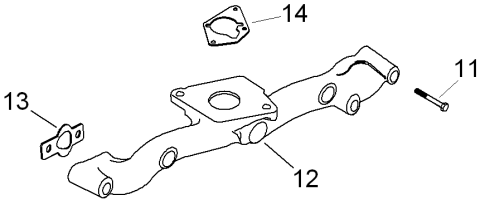


# Air Intake and Filtration Assembly Kohler CH740-3126

| Ref. | Part Number | Qty. | Description |
|---|---|---|---|
| 1 | M-645016-S | 7 | Screw-Flange, Thread Forming (M6X1.0X16) ● |
| 2 | 24 029 28-S | 1 | Adapter-Intake, Air ● |
| 3 | 24 041 38-S | 1 | Gasket-Adapter, Air Cleaner ● |
| 4 | M-551016-S | 1 | Screw-Hex Flange, Heavy (M5X0.8X16) ● |
| 5 | 24 029 35-S | 1 | Plate-Adapter ● |
| 6 | M-639016-S | 3 | Screw-HF (M6X1.0X16) ● |
| 7 | 24 126 143-S | 1 | Bracket-Cleaner, Air ● |
| 8 | X-25-12-S | 1 | Washer-Plain (91/4) ● |
| 9 | 24 314 29-S | 1 | Shield-Debris ● |
| 10 | 24 086 06-S | 2 | Screw-PPH (11-16X3/4) ● |
| 11 | 25 086 84-S | 4 | Screw-HF (M6X1.0X55) ● |
| 12 | 24 164 14-S | 1 | Manifold-Intake ● |
| 13 | 24 041 01-S | 2 | Gasket-Manifold, Intake ● |
| 14 | 24 041 06-S | 1 | Gasket-Base, Air Cleaner ● |

● Obtain parts from www.kohlerplus.com

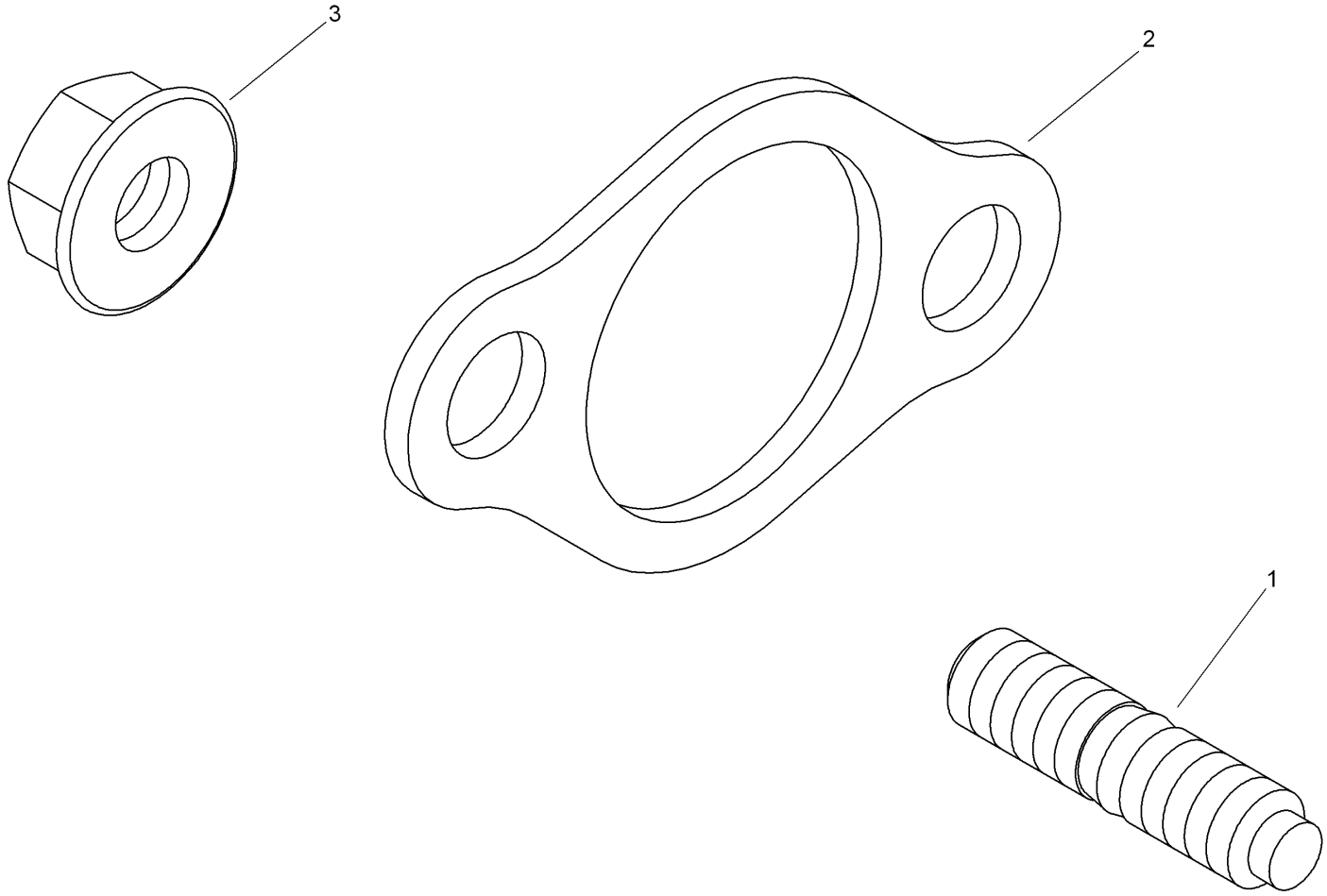


# Exhaust Assembly
# Kohler CH740-3126

| Ref. | Part Number | Qty. | Description |
|---|---|---|---|
| 1 | 25 072 14-S | 4 | Stud (M8X1.25X33) ● |
| 2 | 24 041 49-S | 2 | Gasket-Exhaust ● |
| 3 | M-841080-S | 4 | Nut-Flange (M8X1.25) ● |

● Obtain parts from www.kohlerplus.com

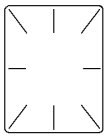

1

2

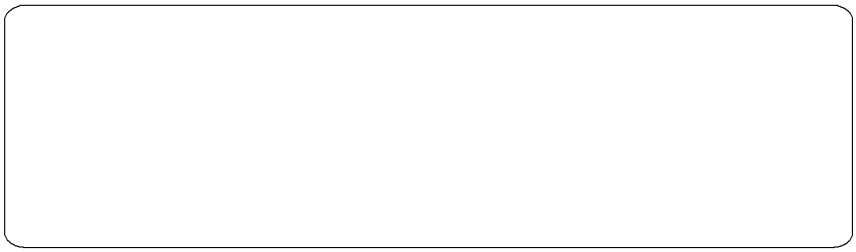

3

Artwork is representative
Actual labels may differ depending on model and specification number

# Decal Set
# Kohler CH740-3126

| Ref. | Part Number | Qty. | Description |
|---|---|---|---|
| 1 | 25 113 39-S | 1 | Decal-Laminate, Clear ● |
| 2 | 24 113 25-S | 1 | Decal-Cooler, Oil ● |
| 3 | 24 113 124-S | 1 | Decal-27 HP ● |

● Obtain parts from www.kohlerplus.com

# Attachments and Accessories

## For 22322 TX 427 Wide Track Compact Utility Loader

| Product Name | Model/Part |
|---|---|
| Light Kit | 100-8840 |
| Road Wheel Kit | 106-7620 |
| Reference Guide Kit | 107-9310 |
| Track-Aggressive Tread, Wide | 108-9749 |
| Alignment Tool | 110-0069 |
| 4 Cubic Foot Standard Bucket | 22409 |
| Loose Materials Bucket | 22410 |
| 48in Hydraulic Blade | 22414 |
| Rotary Broom | 22415 |
| Bore Drive Head | 22420 |
| Rod and Reamer | 22421 |
| Multi-Purpose Tool | 22423 |
| Power Box Rake | 22425 |
| Stump Grinder | 22429 |
| Tree Forks | 22438 |
| Cement Bowl | 22442 |
| 40in Tiller | 22445 |
| Snowthrower | 22456 |
| Crumber Kit | 22464 |
| Trencher Head | 22470 |
| High-Speed Trencher Head | 22471 |
| Trench Filler | 22472 |
| TX Platform | 22475 |
| Narrow Bucket | 22520 |
| Grapple Rake | 22521 |
| Auger Head | 22805 |
| Universal Swivel Auger Head | 22806 |
| Vibratory Plow | 22911 |
| Soil Cultivator | 23101 |
| Concrete Breaker | 23135 |
| Backhoe Fitup Kit | 23162 |
| Backhoe | 23163 |
| Adjustable Forks | 23164 |
| Leveler | 23165 |
| Spark Arrestor Screen | 75-6880 |

TORO®

Count on it.