Form No. 3382-773 Rev B

TORO®

Count on it.

Parts Catalog

TX 427 Wide Track Compact Utility Loader

Model No. 22322—Serial No. 314000001 and Up

Register at www.Toro.com.
Original Instructions (EN)

CE

3382-773 B

Ordering Replacement Parts

To order replacement parts, please supply the part number, the quantity, and the description of each part desired.

Understanding Reference Numbers

Each identified part in an illustration has a reference number. The reference number for a part also appears in the parts list, along with other information about the part.

This catalog uses two special reference number formats, one to indicate parts in a service assembly and another to indicate the quantity of a given part in an illustration.

Service Assembly Reference Numbers

Parts in service assemblies have reference numbers in the form a:b. The a represents the reference number of the entire service assembly and the b represents a sequential number unique to each part within the service assembly.

For example, a wheel assembly might be identified by reference number 6, the tire by 6:1, the valve by 6:2, and the wheel by 6:3. When you order the assembly identified by reference number 6, you receive all parts identified by reference numbers 6:1,6:2, and 6:3. However, you may also order any part individually. Reference numbers of this type appear in illustration and in parts lists.

Reference Numbers Indicating Quantity

In an illustration, if a reference number indicates more than one part, the reference number has the form nX y. The n represents the quantity of the part, the X is the multiplication symbol, and the y represents the reference number.

For example, in an illustration, the reference number 2X 37 means that two of the parts identified by reference number 37 are indicated.

Contents

Main Frame and Fuel Tank Assembly 4
Track and Traction Assembly 6
Parking Brake Assembly 7
Loader Tower and Pulley Assembly 8
Traction Hydraulic Assembly 9
Hydraulic Pump Assembly No. 106-5705 and 106-5706 11
Hydraulic Motor Assembly No. 114-1756 12
Engine Assembly 13
Air Cleaner Assembly No. 117-9989 15
Hydraulic Pump and Filter Assembly 16
Hydraulic Gear Pump Assembly No. 106-7650 17
Control Panel Assembly 18
Traction Control Assembly 20
Principal Hydraulic Assembly 21
Two Spool Valve Assembly No. 106-9307 23
One Spool Valve Assembly No. 104-2831 24
Loader Arm Assembly 25
Loader Arm Hydraulic Assembly 26
Left Hand Hydraulic Lift Cylinder Assembly No. 104-6267 27
Right Hand Hydraulic Lift Cylinder Assembly No. 104-6269 28
Hydraulic Cylinder Assembly No. 105-8370 29
Quick Attach Assembly 30
Electrical System Assembly 31
Grill Assembly 32
Hydraulic Oil Cooler Assembly 33
Hood Assembly 34
Rear Access Cover Assembly 35
Attachments and Accessories 36

© 2024—The Toro® Company
8111 Lyndale Avenue South
Bloomington, MN 55420

Contact us at www.Toro.com.
Printed in the USA.
All Rights Reserved

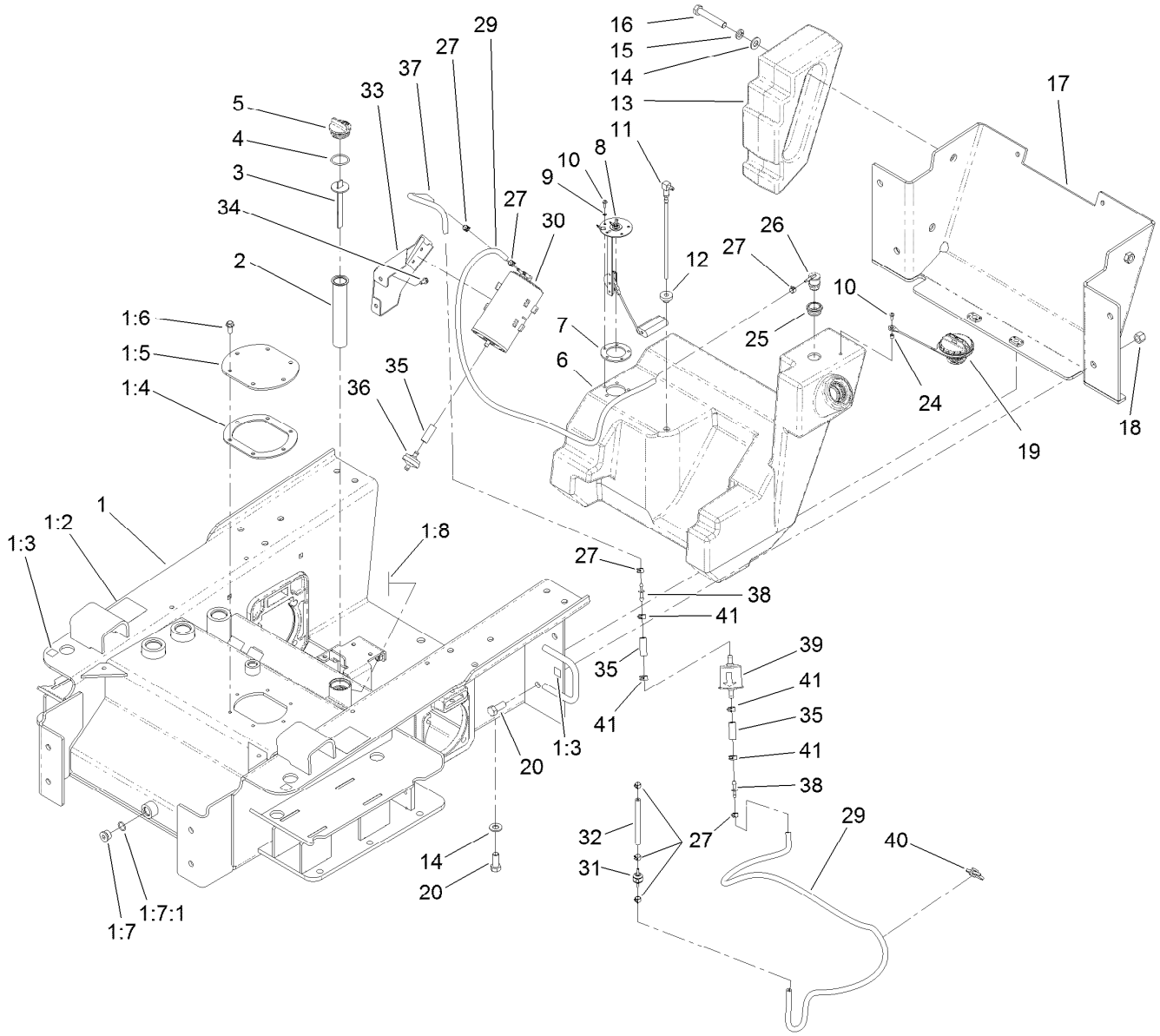

Main Frame and Fuel Tank Assembly

Ref.	Part Number	Qty.	Description
1	114-1352	1	Chassis ASM
1:2	100-4650	2	Decal-Warning
1:3	93-9084	4	Decal-Point, Lift
1:4	107-3557	1	Gasket-Cover, Access
1:5	108-6297-01	1	Cover-Tank
1:6	98-9940	6	Screw-HHF
1:7	353-988	2	Plug-Hex
1:7:1	237-79	1	O-Ring
1:8	93-6686	1	Decal-Oil, HYD
2	61-2790	1	Filter-Screen
3	100-2097	1	Dipstick-Oil
4	237-123	1	O-Ring
5	93-7498	1	Plug-Plastic
6	117-9956	1	Tank-Fuel
7	113372	1	Gasket-Sender, Fuel
8	100-1298	1	Sender-Fuel
9	3253-17	5	Washer-Lock
10	3250-31	6	Screw-PPH
11	98-0185	1	Pipe-Stand
12	46-6560	1	Bushing
13	99-6165-01	2	Counterweight-Rear

Ref.	Part Number	Qty.	Description
14	3256-26	6	Washer-Flat
15	3253-7	4	Washer-Lock
16	325-12	4	Screw-HH
17	115-4565-01	1	Cover-Rear
18	3296-23	4	Nut-Lock, NI
19	117-1722	1	Cap-Fuel
20	325-5	6	Screw-HH
24	117-9965	1	Spacer
25	114-0284	1	Grommet
26	114-0285	1	Valve-Rollover
27	2412-146	8	Clamp-Hose
29	119-3517	2	Hose-Fuel
30	115-2251	1	Canister-Carbon
31	115-7868	1	Valve-Check, Vacuum
32	115-4736	1	Hose-Fuel
33	117-4043	1	Holder-Canister
34	9266714	2	Screw-HWH
35	106-5317	3	Hose-Fuel
36	115-7854	1	Filter-Fuel, Inline
37	51-3217	1	Hose-Fuel
38	106-8150	2	Fitting-Straight

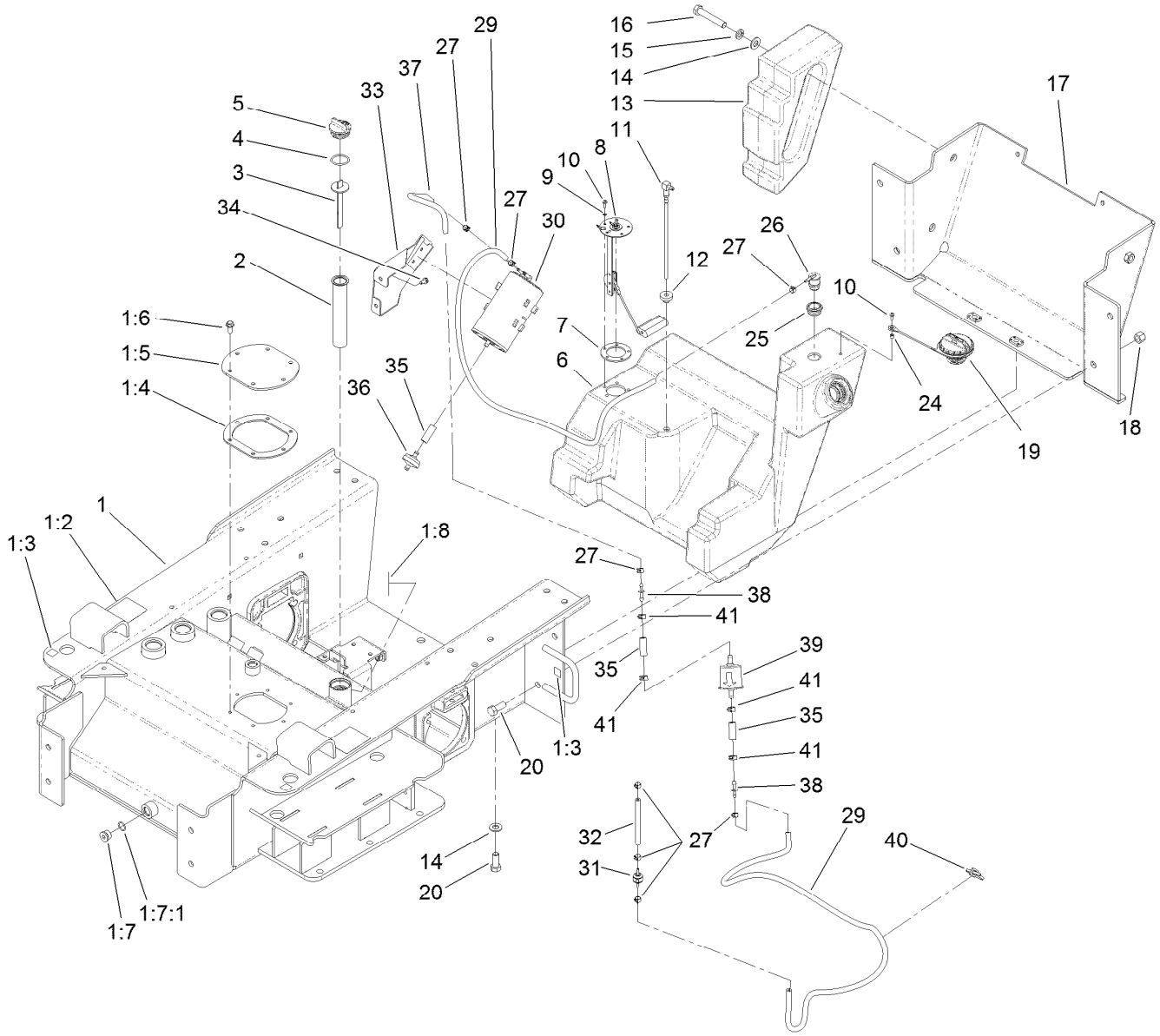

Main Frame and Fuel Tank Assembly (continued)

Ref.	Part Number	Qty.	Description
39	120-2235	1	Filter-Fuel
40	3290-378	1	Tie-Cable
41	92-2379	4	Clamp-Hose

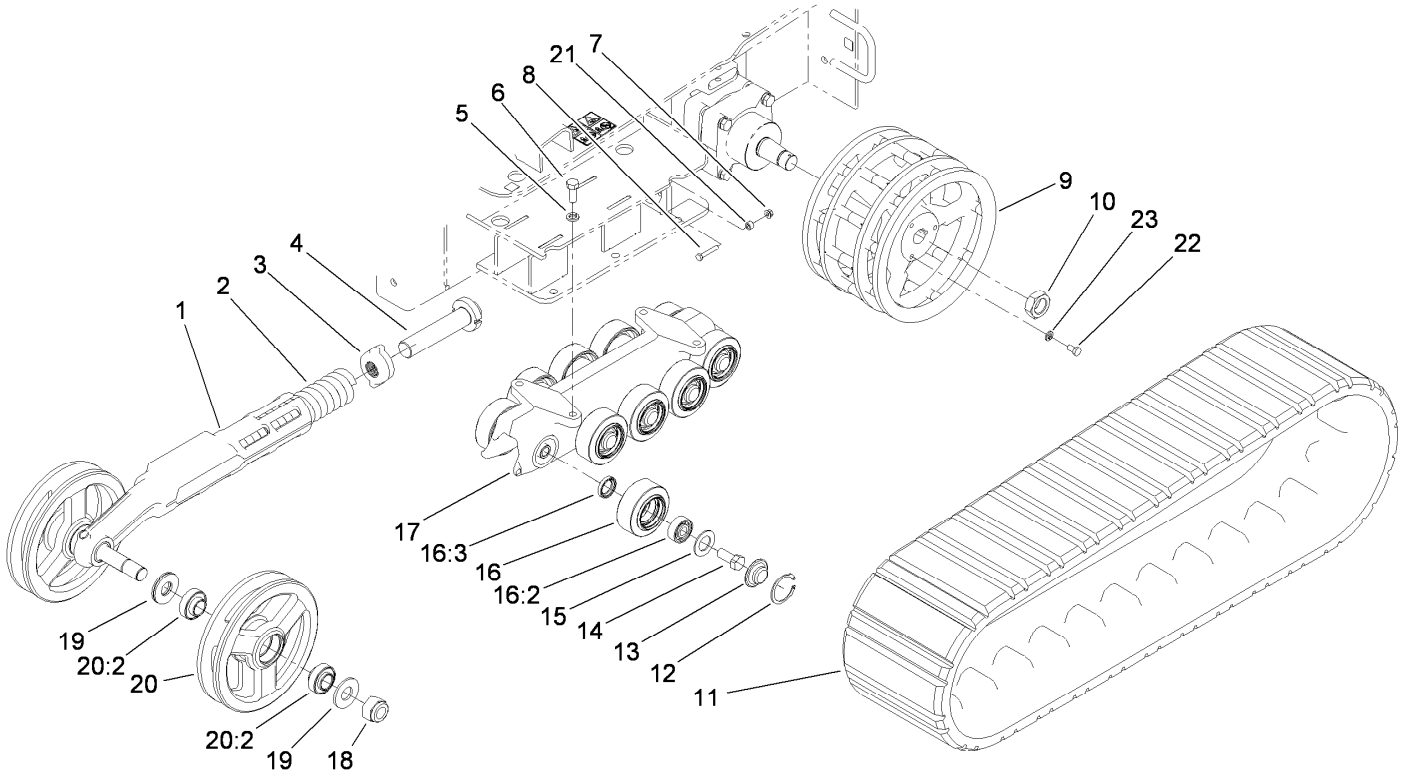

Track and Traction Assembly

Ref.	Part Number	Qty.	Description
1	115-0717-03	2	Arm-Tensioner
2	95-3624	2	Spring-Compression
3	108-4664	2	Block-Tensioner
4	98-9846	2	Bolt-Tensioner
5	3253-7	8	Washer-Lock
6	325-5	8	Screw-HH
7	32128-32	2	Nut-HHF
8	321-37	2	Screw-HH
9	115-0721-03	2	Wheel-Drive
10	107-9319	2	Nut-Hex
11	100-8931	2	Track
12	106-7595	20	Ring-Snap, Internal
13	106-7557	20	Cap-Wheel, Bearing

Ref.	Part Number	Qty.	Description
14	327-4	20	Screw-HH
15	106-7585	20	Gasket-Bogie
16	106-7621	20	Road Wheel ASM
16:2	120-5378	1	Bearing-Ball
16:3	253-118	1	Seal-Oil
17	117-1308-03	2	Guide-Track
18	104-2024	4	Nut-Hex, NI
19	115-0722	8	Washer-Plain
20	104-6123	4	Tensioner Wheel ASM
20:2	104-6129	2	Bearing-Ball
21	98-4799	2	Spacer
22	323-34	6	Screw-HH
23	3253-21	6	Washer-Lock

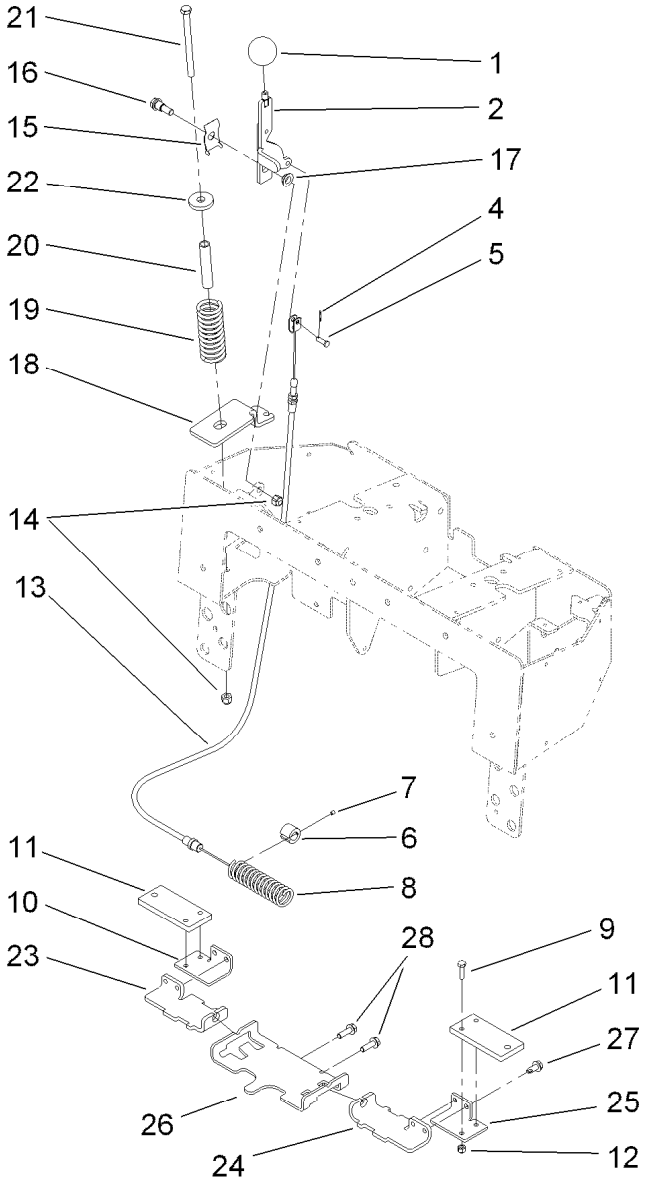

Parking Brake Assembly

Ref.	Part Number	Qty.	Description
1	233-21	1	Knob
2	112-2694-03	1	Handle-Brake
4	3272-1	1	Pin-Cotter
5	283-67	1	Pin-Clevis
6	100-6274	2	Tube-Guide
7	3245-20	2	Screw-Set
8	100-1678	1	Spring
9	321-6	4	Screw-HH
10	112-2789-03	1	Bar-Link, Brake RH
11	112-2735-03	2	Plate-Brake
12	3296-42	4	Nut-Lock, NI
13	112-2791	1	Cable-Brake
14	3296-39	2	Nut-Lock, NI
15	112-2695	1	Spring-Leaf

Ref.	Part Number	Qty.	Description
16	94-6177	1	Bolt-Shoulder
17	93-2368	1	Bushing-Flange
18	115-4854-03	1	Bracket-Cable, Spring
19	114-1254	1	Spring-Compression
20	114-1255	1	Spacer-Spring
21	323-39	1	Screw-HH
22	98-0691	1	Washer-Hardened
23	112-2788-03	1	Bracket-Mounting, Brake RH
24	112-2733-03	1	Bracket-Mounting, Brake LH
25	112-2734-03	1	Bar-Link, Brake LH
26	110-0224-03	1	Support-Bar, Brake
27	32104-32	4	Screw-HWH
28	3234-11	2	Screw-HHF

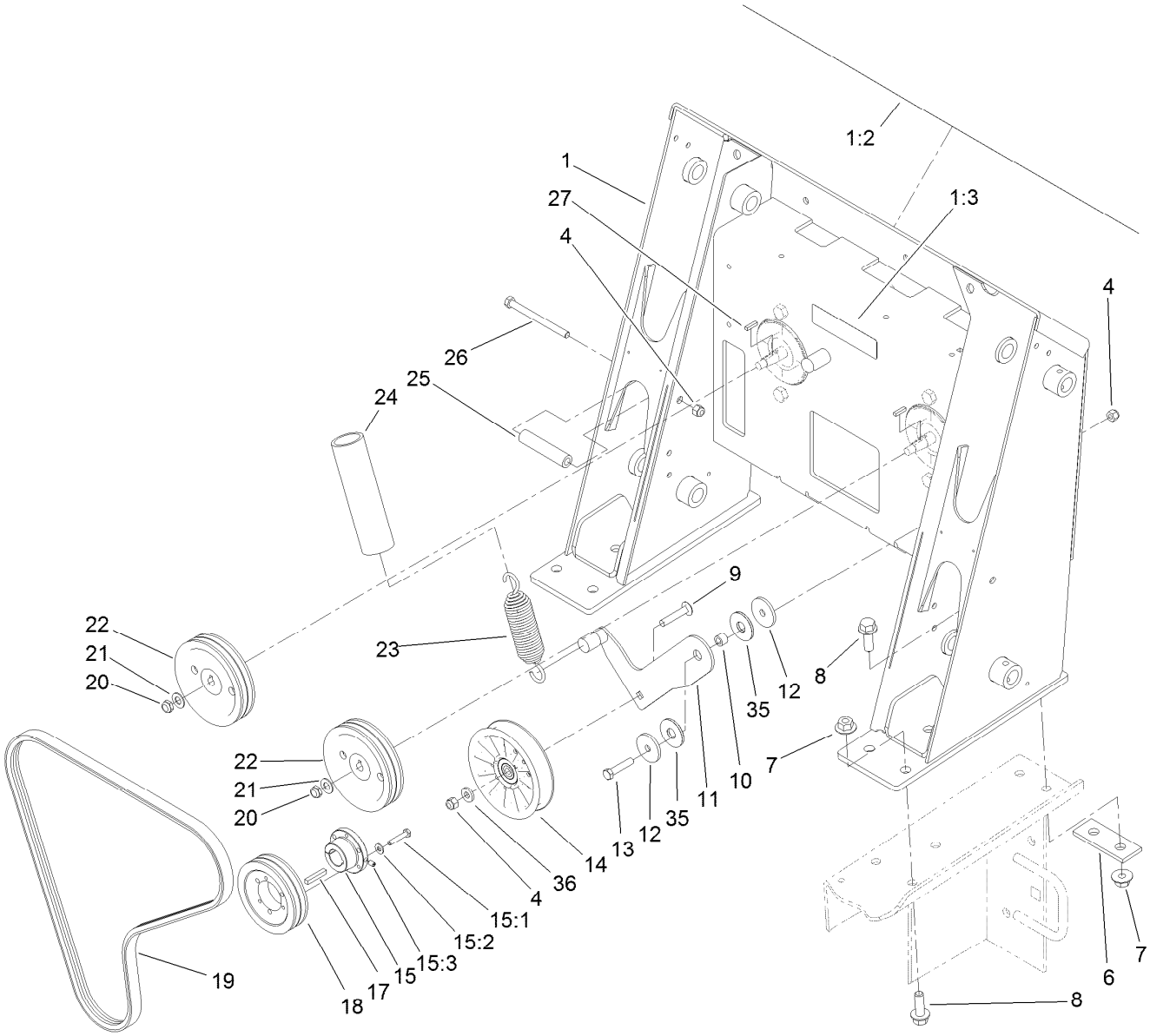

Loader Tower and Pulley Assembly

Ref.	Part Number	Qty.	Description
1	117-9982	1	Loader Tower ASM
1:2	117-4045	1	Decal-Panel, Control
1:3	93-7814	1	Decal-Danger
4	104-8301	4	Nut-HF, NI
6	100-6123-01	2	Plate-Stiffener
7	32128-52	10	Nut-Lock, Flange
8	100-6116	10	Screw-HHF
9	117-9971	1	Bolt-Carriage
10	115-4986	1	Spacer
11	115-1486	1	Arm-Idler
12	115-1485	2	Washer-Plain
13	323-9	1	Screw-HH
14	119-2358	1	Pulley-Idler
15	61-3340	1	Bushing
15:1	321-13	3	Screw-HH
15:2	3253-2	3	Washer-Lock
15:3	3245-2	1	Screw-Set, HSH
17	67-7490	1	Key-Square
18	61-3330	1	Pulley
19	95-3611	1	V-Belt
20	3296-38	2	Nut-Lock, NI
21	3256-25	2	Washer-Flat
22	106-5710	2	Pulley-3V
23	105-0383	1	Spring-Extension
24	112-2409	1	Retainer-Spring
25	100-1271	2	Tube-Spacer
26	323-23	2	Screw-HH
27	3-6168	2	Key
35	114-0463	2	Washer-Friction, Composite
36	43-0940	1	Spacer

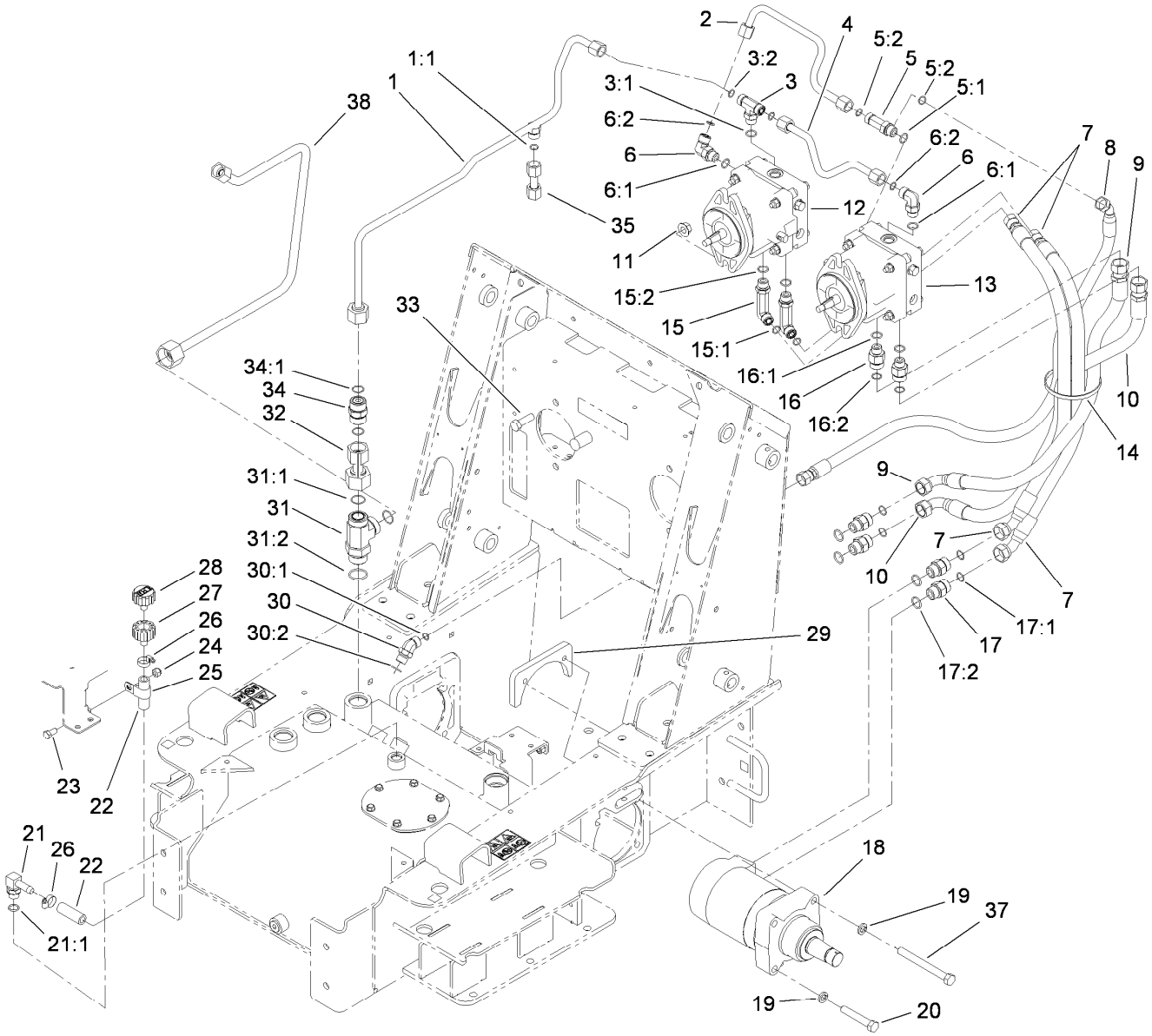

Traction Hydraulic Assembly

Ref.	Part Number	Qty.	Description
1	108-4665	1	HYD Tube ASM
1:1	237-30	1	O-Ring
2	98-0200	1	Tube-HYD
3	340-157	1	Fitting-HYD, Tee
3:1	237-79	1	O-Ring
3:2	237-30	2	O-Ring
4	106-9330	1	Tube-HYD
5	340-109	1	Fitting-Tee
5:1	237-79	1	O-Ring
5:2	237-30	2	O-Ring
6	340-98	2	Fitting-Elbow, 90 DEG
6:1	237-79	1	O-Ring
6:2	237-30	1	O-Ring
7	98-0233	2	Hose-HYD
8	98-0201	1	Hose-HYD
9	115-4826	1	Hose-HYD
10	115-4829	1	Hose-HYD
11	32128-52	4	Nut-Lock, Flange
12	106-5706	1	RH HYD Pump ASM
13	106-5705	1	LH HYD Pump ASM
14	3334-945	1	Tie-Cable

Ref.	Part Number	Qty.	Description
15	99-6160	2	Fitting-Elbow, 90 Long
15:1	237-30	1	O-Ring
15:2	237-79	1	O-Ring
16	340-155	2	Fitting-Straight
16:1	237-79	1	O-Ring
16:2	237-151	1	O-Ring
17	340-7	4	Fitting-Straight
17:1	237-65	1	O-Ring
17:2	237-80	1	O-Ring
18	114-1756	2	HYD Motor ASM
19	3253-7	8	Washer-Lock
20	115-4845	4	Screw-HH, TAP
21	354-120	1	Fitting-Elbow, 90
21:1	237-79	1	O-Ring
22	98-4667	1	Hose
23	3234-42	1	Screw-HHF
24	3296-39	1	Nut-Lock, NI
25	2412-4	1	Clamp-R
26	2412-36	2	Clamp-Hose
27	92-8020	1	Adapter-Breather
28	68-6150	1	Breather

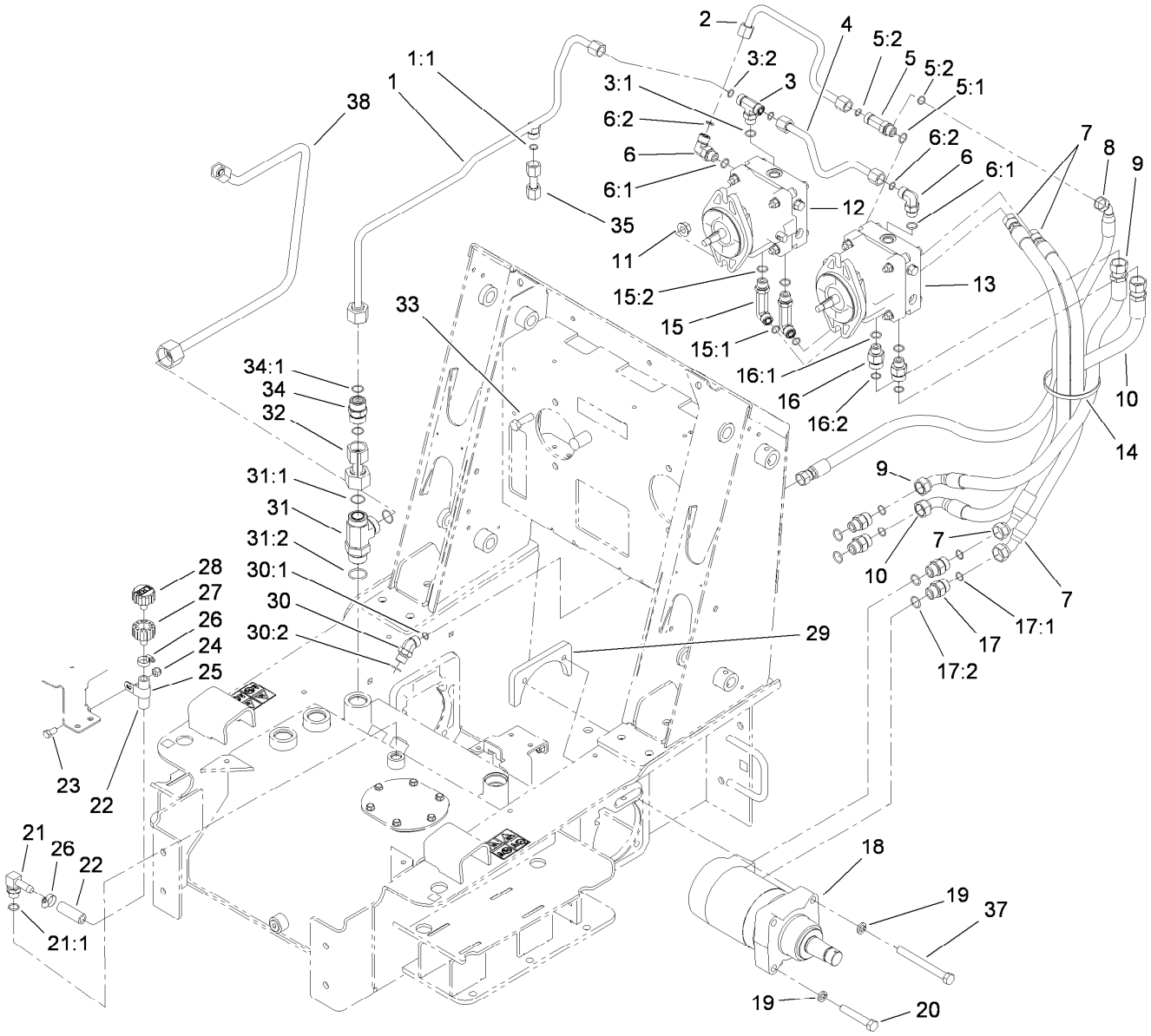

Traction Hydraulic Assembly (continued)

Ref.	Part Number	Qty.	Description
29	98-2763-03	2	Plate-Mounting
30	340-101	1	Fitting-HYD, 45 DEG
30:1	237-30	1	O-Ring
30:2	237-79	1	O-Ring
31	104-3795	1	Fitting-Tee
31:1	340-65	2	O-Ring
31:2	237-146	1	O-Ring

Ref.	Part Number	Qty.	Description
32	105-0226	1	Tube-HYD
33	325-6	4	Screw-HH
34	99-6161	1	HYD Check Valve ASM
34:1	237-58	2	O-Ring
35	108-4666	1	Tube-HYD
37	325-19	4	Screw-HH
38	117-3988	1	Tube-HYD

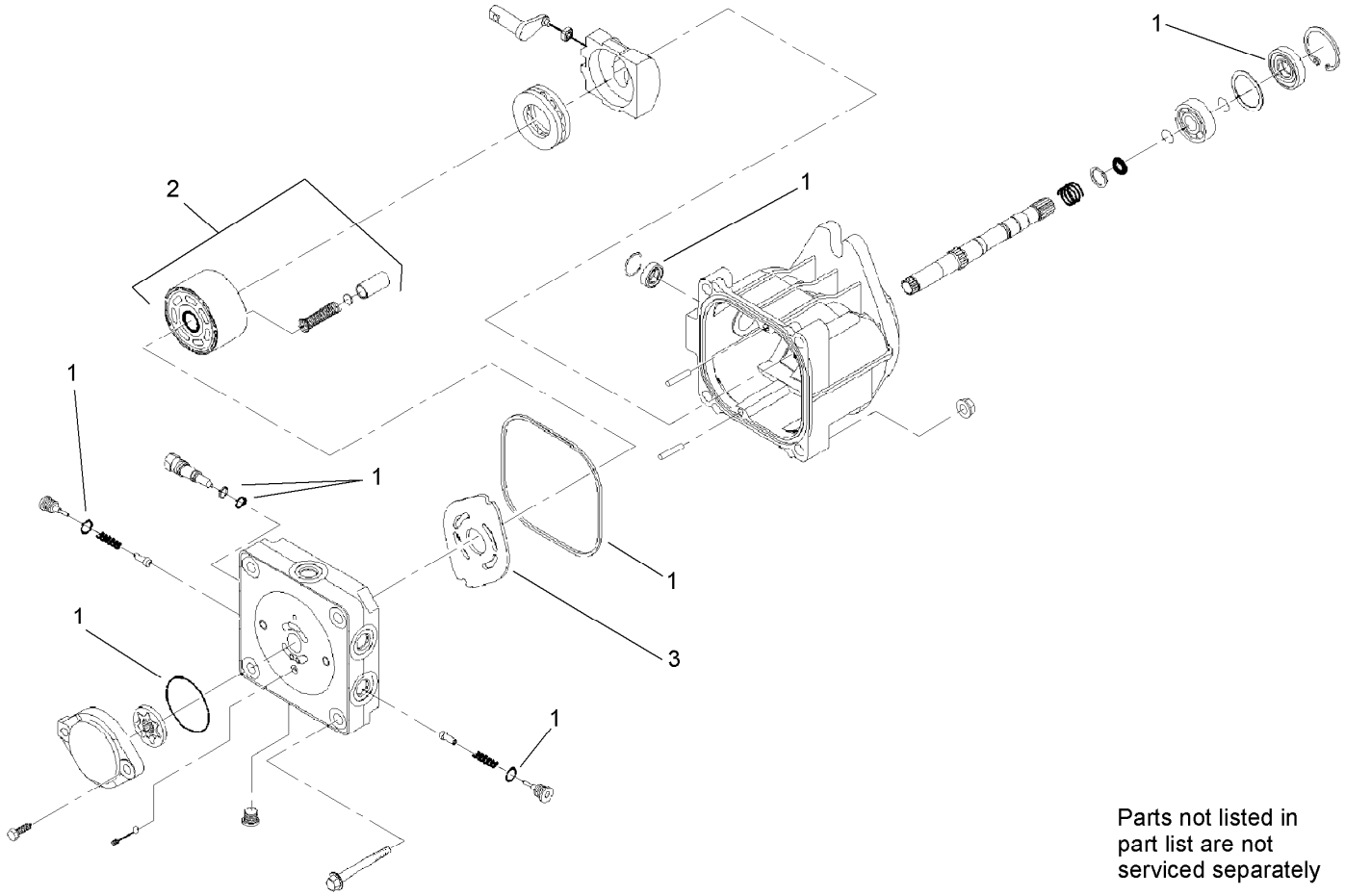

Parts not listed in part list are not serviced separately

Hydraulic Pump Assembly No. 106-5705 and 106-5706

Ref.	*Part Number*	*Qty.*	*Description*
1	100-6110	1	Overhaul Seal Kit
2	94-1913	1	Cylinder Block ASM
3	100-6112	1	Plate-Valve

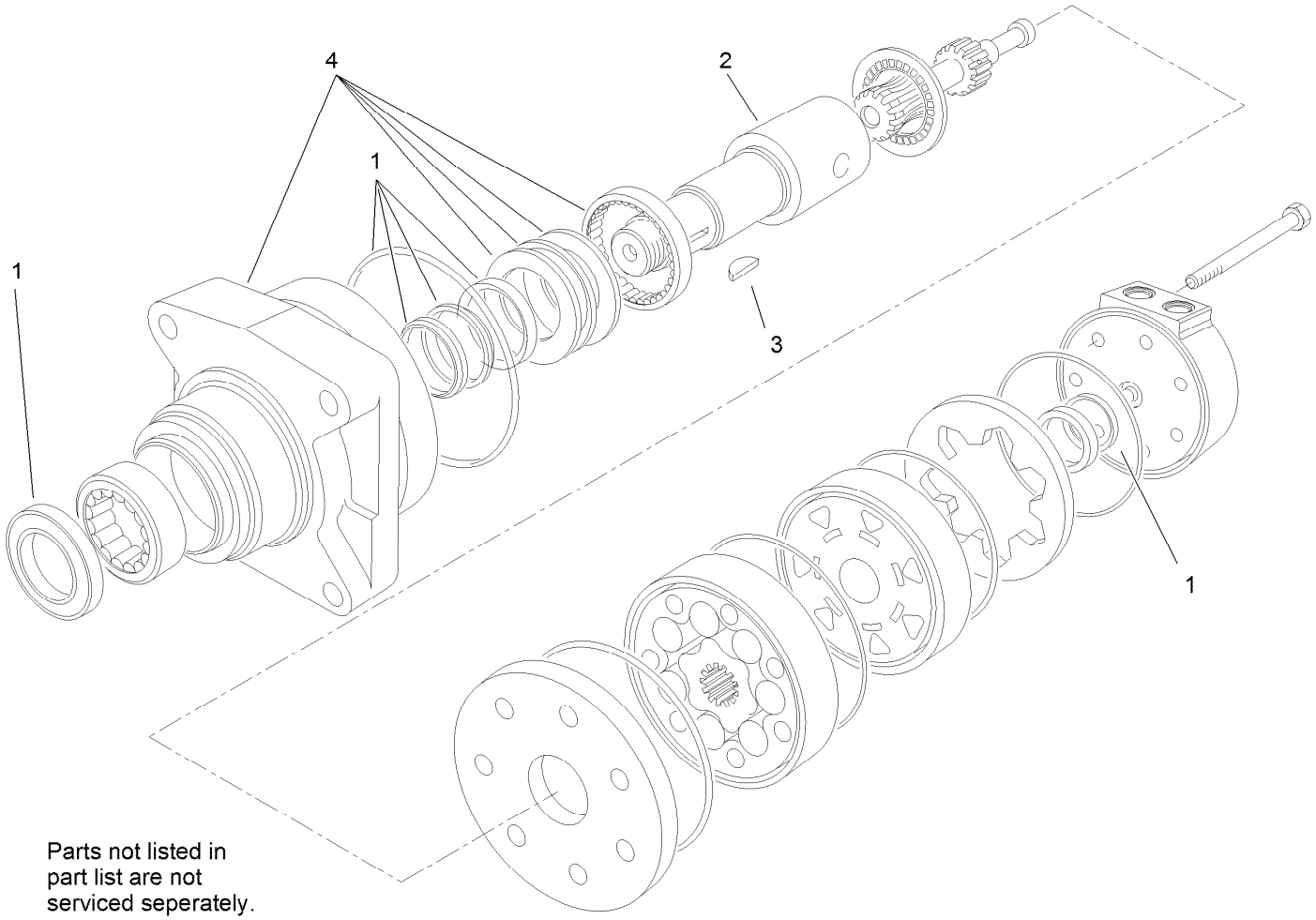

Hydraulic Motor Assembly No. 114-1756

Ref.	*Part Number*	*Qty.*	*Description*
1	100-6131	1	Seal Kit
2	106-7645	1	Coupling-Shaft
3	3257-42	1	Key-Woodruff
4	120-5393	1	Motor Housing ASM

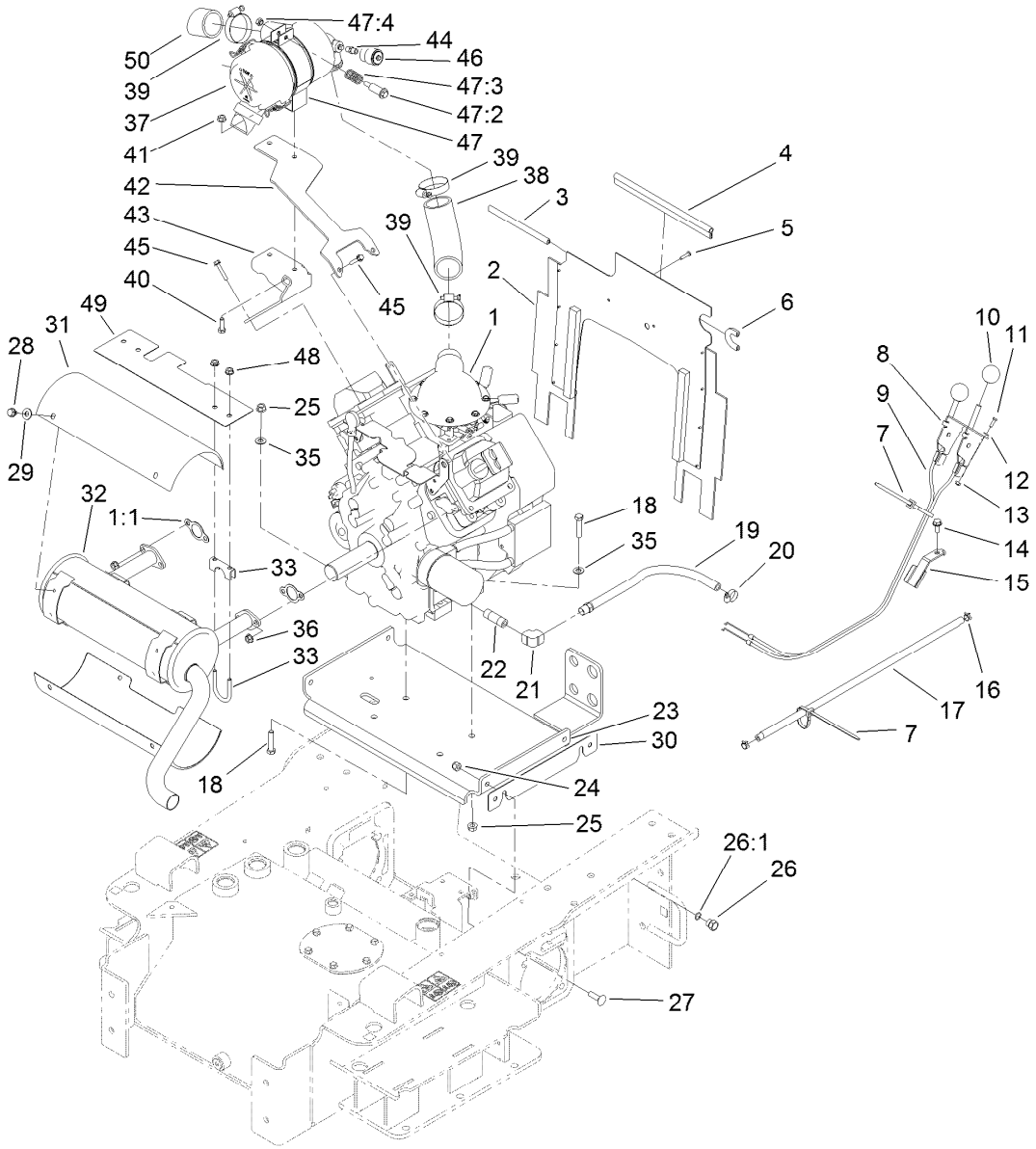

Engine Assembly

Ref.	Part Number	Qty.	Description
1		1	Engine-Kohler, Ch740-3136 ●■
1:1	93-0350	2	Gasket-Exhaust
2	114-8725	1	Baffle-Engine
3	105-0378	1	Seal-Strip, 6.5 Inch
4	115-4837	1	Strip-Seal, 10.5 Inch
5	32144-36	2	Screw-PPH
6	105-0377	1	Seal-Strip, 3 Inch
7	3290-378	2	Tie-Cable
8	108-9730	2	Lever-Control
9	108-4679	2	Cable-Throttle/Choke
10	233-42	2	Knob
11	3290-134	4	Screw
12	3256-51	4	Washer-Flat
13	32149-7	4	Nut-Keps
14	32144-11	1	Screw-HWH
15	100-1299-03	1	Guide-Cable
16	2412-98	2	Clamp-Hose

Ref.	Part Number	Qty.	Description
17	109-0301	1	Hose-Fuel
18	323-53	4	Screw-HH
19	100-1256	1	Oil Hose ASM
20	2412-36	1	Clamp-Hose
21	94-9650	1	Elbow-90 DEG
22	289-42	1	Nipple
23	114-1288-03	1	Plate-Mounting, Engine
24	3296-39	4	Nut-Lock, NI
25	32128-21	4	Nut-HF Lock
26	353-508	1	Plug-HH
26:1	237-42	1	O-Ring
27	3231-28	4	Screw-CARR
28	9266934	8	Screw
29	3256-3	8	Washer-Flat
30	117-1811-03	1	Shim-Strap
31	117-9973	2	Shield-Muffler
32	115-1509	1	Muffler
33	114-1365	2	Clamp-Muffler

● Not serviced separately

■ Obtain parts from www.kohlerplus.com

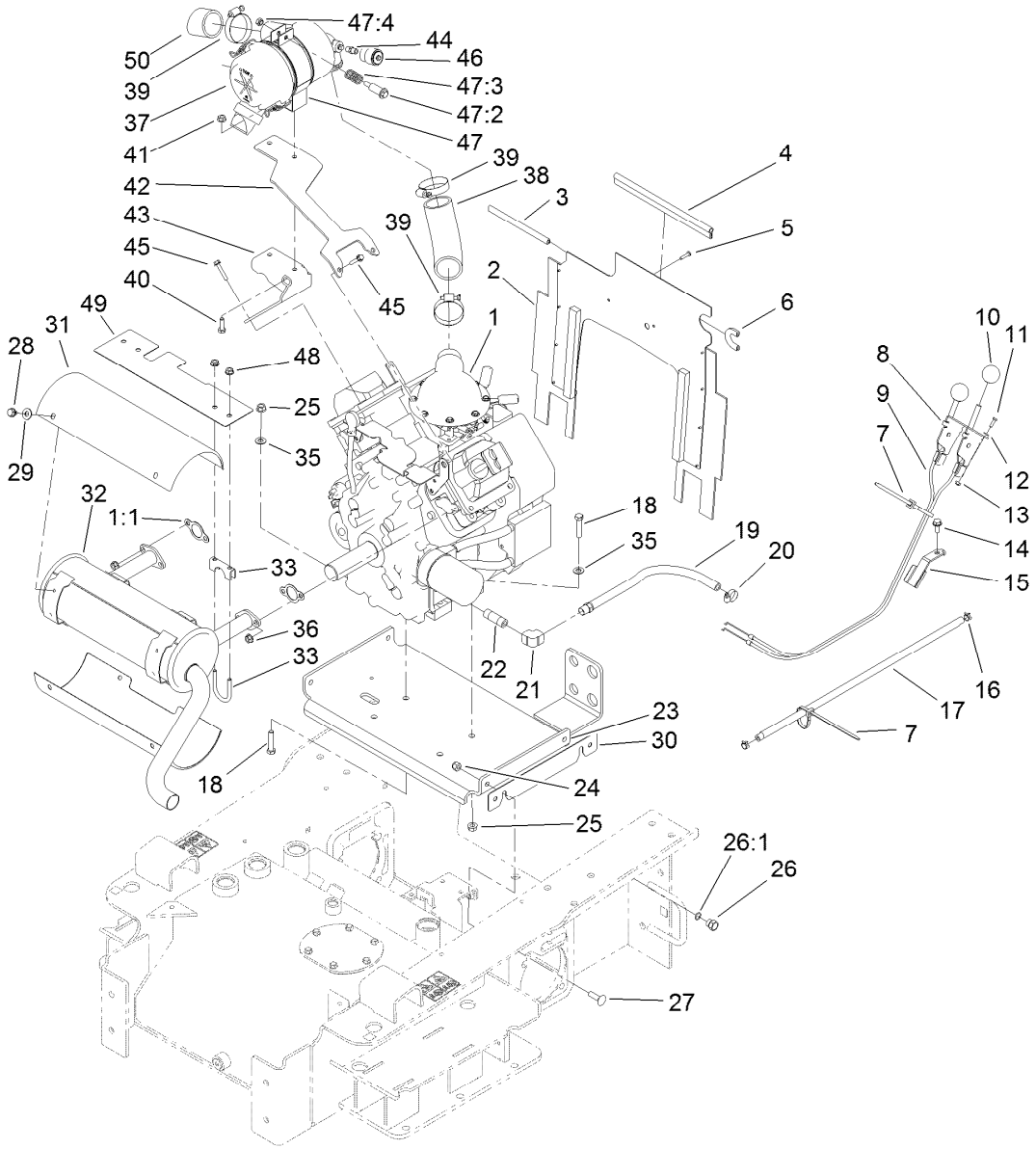

Engine Assembly (continued)

Ref.	Part Number	Qty.	Description
35	48-9220	4	Washer-Flat
36	112-2844	4	Nut-HF
37	117-9989	1	Air Cleaner ASM
38	114-8734	1	Hose-Air Cleaner
39	2412-92	3	Clamp-Hose
40	322-5	2	Screw-HH
41	32128-20	2	Nut-HF
42	117-1728-03	1	Bracket-Support, Left
43	117-1729-03	1	Bracket-Support, Right
44	105-4292	1	Nipple-Pipe

Ref.	Part Number	Qty.	Description
45	33103-035	4	Screw-HHF
46	93-9164	1	Indicator-Mini
47	93-2191	1	Air Cleaner Mounting Band ASM
47:2	94-3653	1	Bolt
47:3	94-3654	1	Spring
47:4	48-9510	1	*obs* Nut
48	32128-25	4	Nut-HF
49	114-1366	1	Shield-Manifold
50	114-1364	1	Tube-Inlet, Air

● Not serviced separately

■ Obtain parts from www.kohlerplus.com

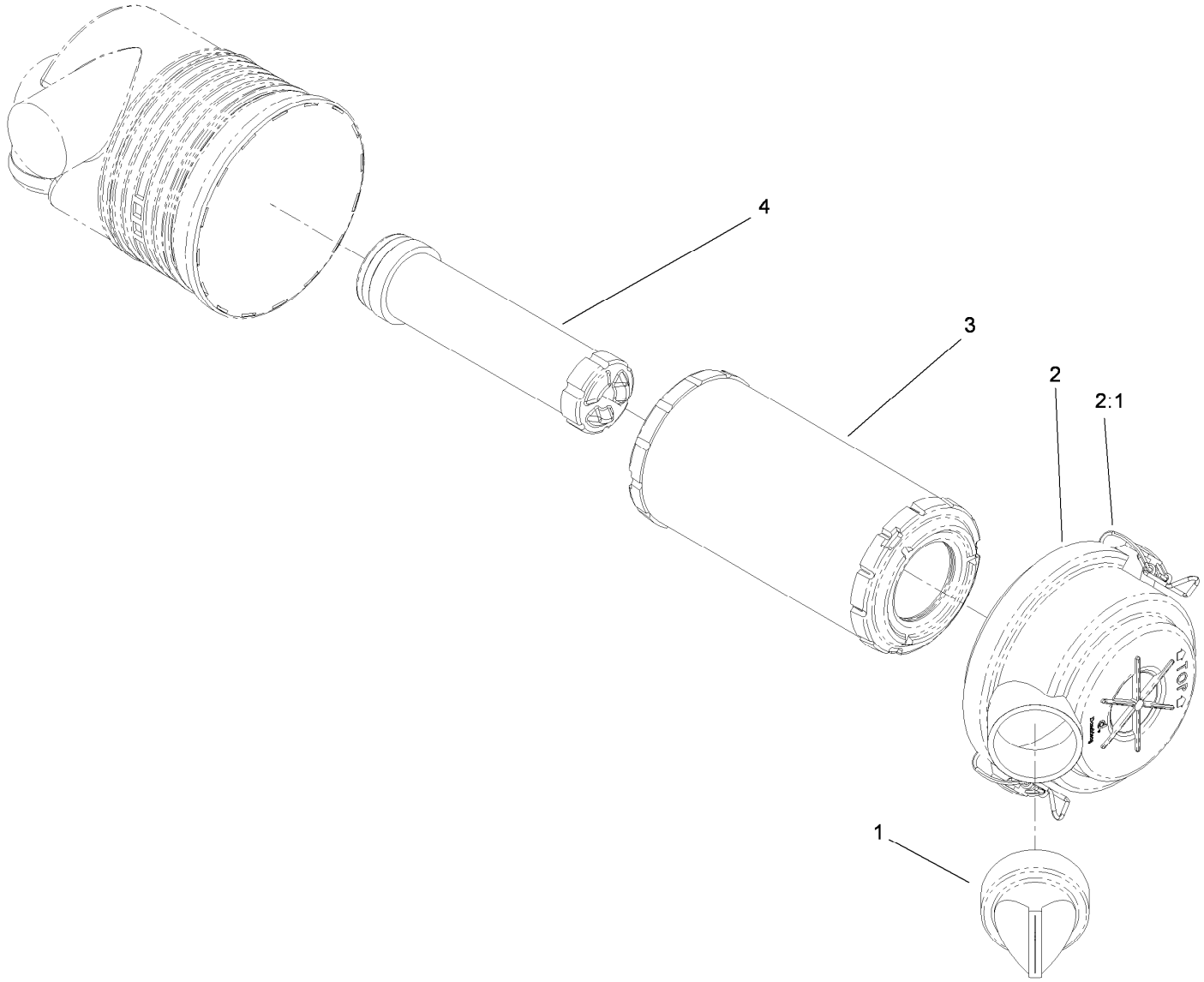

Air Cleaner Assembly No. 117-9989

Ref.	*Part Number*	*Qty.*	*Description*
1	87-9400	1	Valve-Vacuator
2	94-3652	1	Cover ASM
2:1	1-643283	2	Latch-Cleaner, Air
3	108-3811	1	Filter-Air V-Twin HD
4	98-2982	1	Filter-Element, Safety

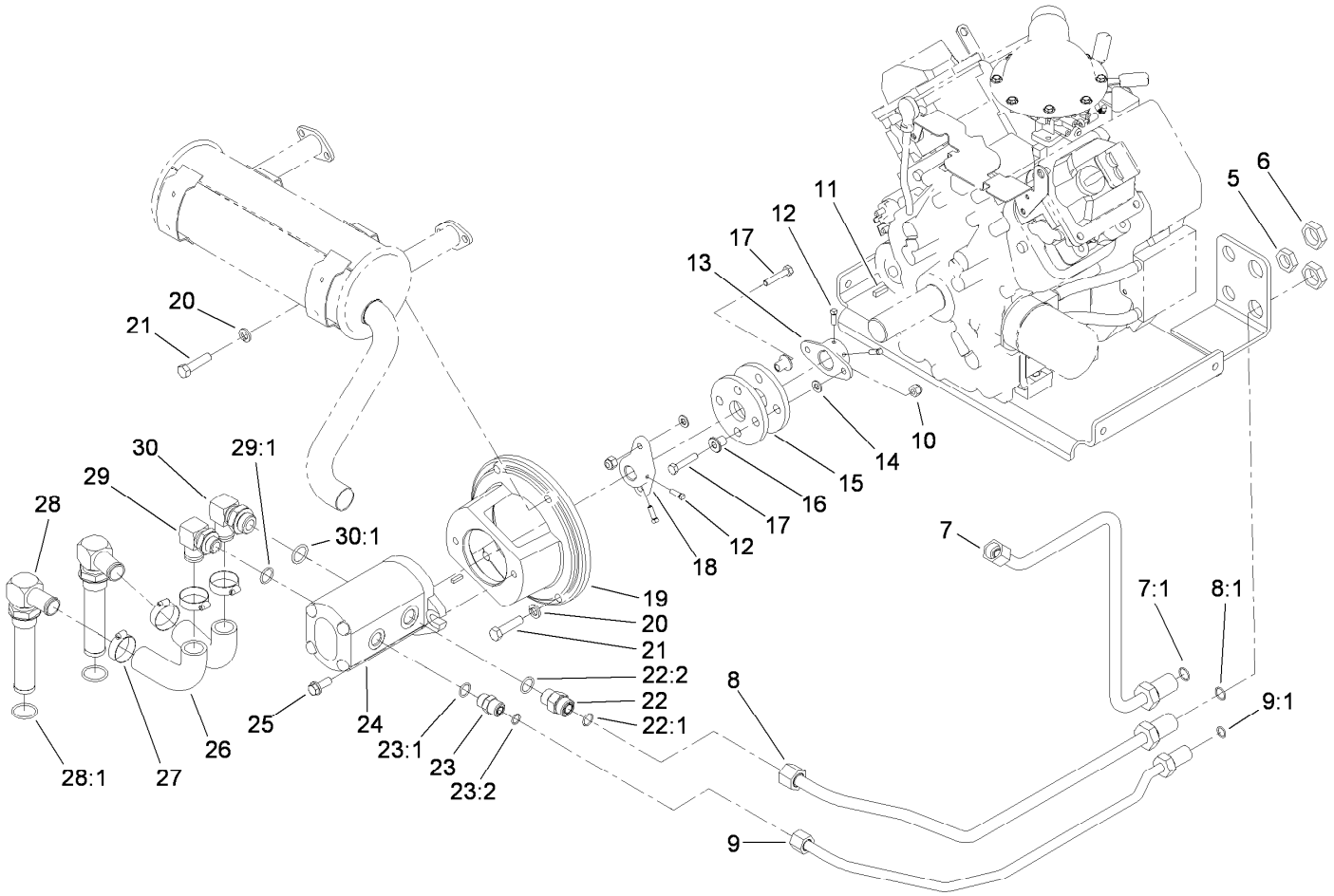

Hydraulic Pump and Filter Assembly

Ref.	Part Number	Qty.	Description
5	340-127	1	Nut-Bulkhead
6	340-74	2	Nut-Lock, Bulkhead
7	106-9333	1	HYD Tube ASM
7:1	237-65	1	O-Ring
8	114-1355	1	HYD Tube ASM
8:1	237-65	1	O-Ring
9	114-1356	1	HYD Tube ASM
9:1	237-30	1	O-Ring
10	3296-29	4	Nut-Lock, NI
11	10-7070	1	Key-Square
12	3241-6	4	Screw-SQH
13	110-5236	1	Hub-Engine
14	3256-23	4	Washer-Plain
15	115-4523	2	Coupling-Rubber
16	71-4411	4	Spacer
17	322-8	4	Screw-HH
18	110-9695	1	Hub-Pump
19	98-2751-03	1	Mount-Pump

Ref.	Part Number	Qty.	Description
20	3253-6	4	Washer-Lock
21	324-7	4	Screw-HH
22	340-7	1	Fitting-Straight
22:1	237-65	1	O-Ring
22:2	237-80	1	O-Ring
23	340-4	1	Fitting-Straight
23:1	237-30	1	O-Ring
23:2	237-79	1	O-Ring
24	106-7650	1	HYD Pump ASM
25	66-9300	2	Screw-HHF
26	105-0201	2	Hose-Suction, Formed
27	2412-34	4	Clamp-Hose
28	105-0204	2	Strainer Fitting ASM
28:1	237-146	1	O-Ring
29	61-2710	1	Stem-Hose, 90 DEG
29:1	237-117	1	O-Ring
30	100-4202	1	Fitting-90
30:1	237-81	1	O-Ring

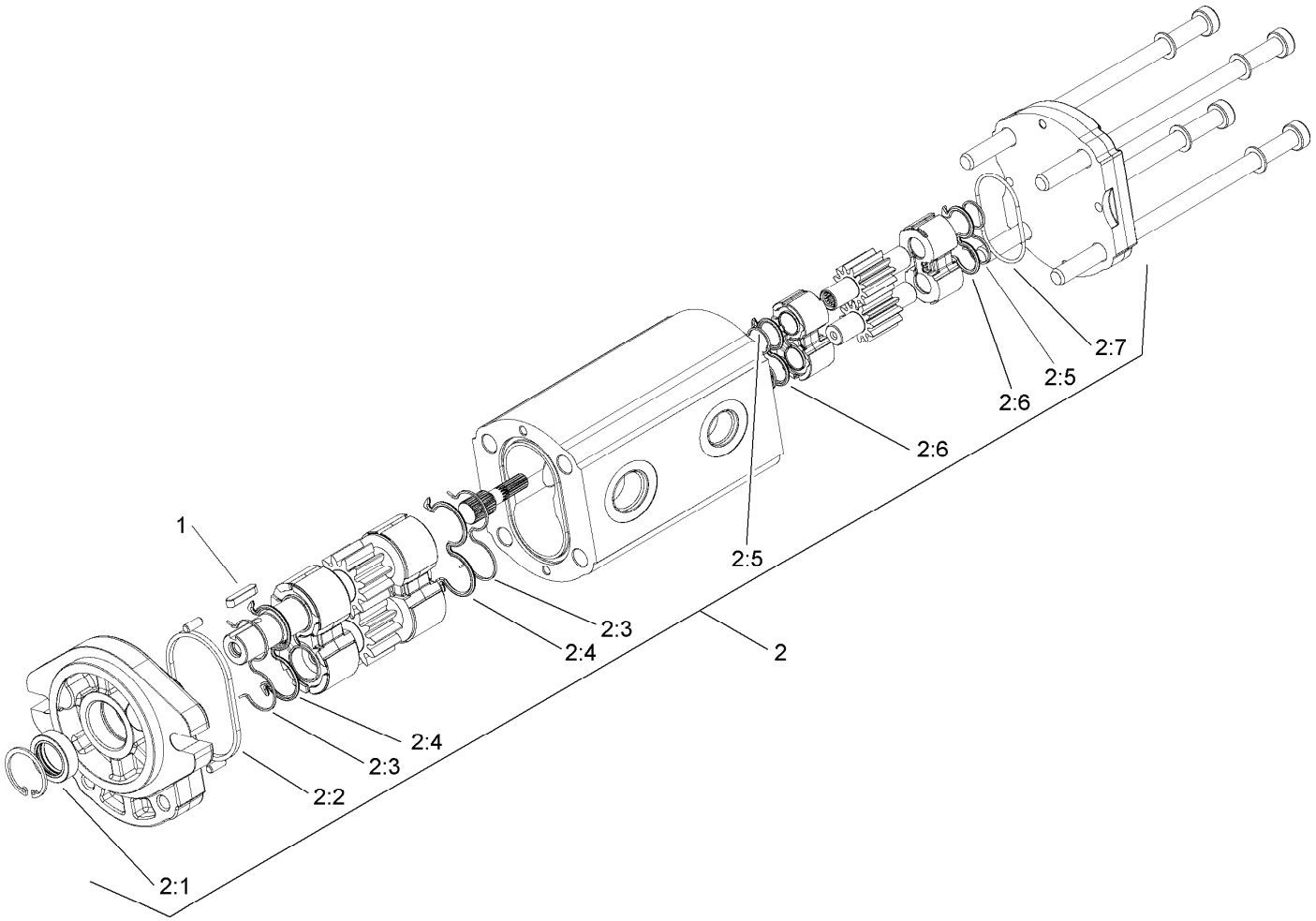

Hydraulic Gear Pump Assembly No. 106-7650

Ref.	*Part Number*	*Qty.*	*Description*
1	100-4238	1	Key-Square
2	107-9316	1	Seal Kit
2:1		1	Seal-Shaft ●
2:2		1	Seal-Square ●
2:3		2	Ring-Backup ●
2:4		2	Seal-Gear ●
2:5		2	Ring-Backup ●
2:6		2	Seal-Gear, Rear ●
2:7		1	O-Ring ●

● Not serviced separately

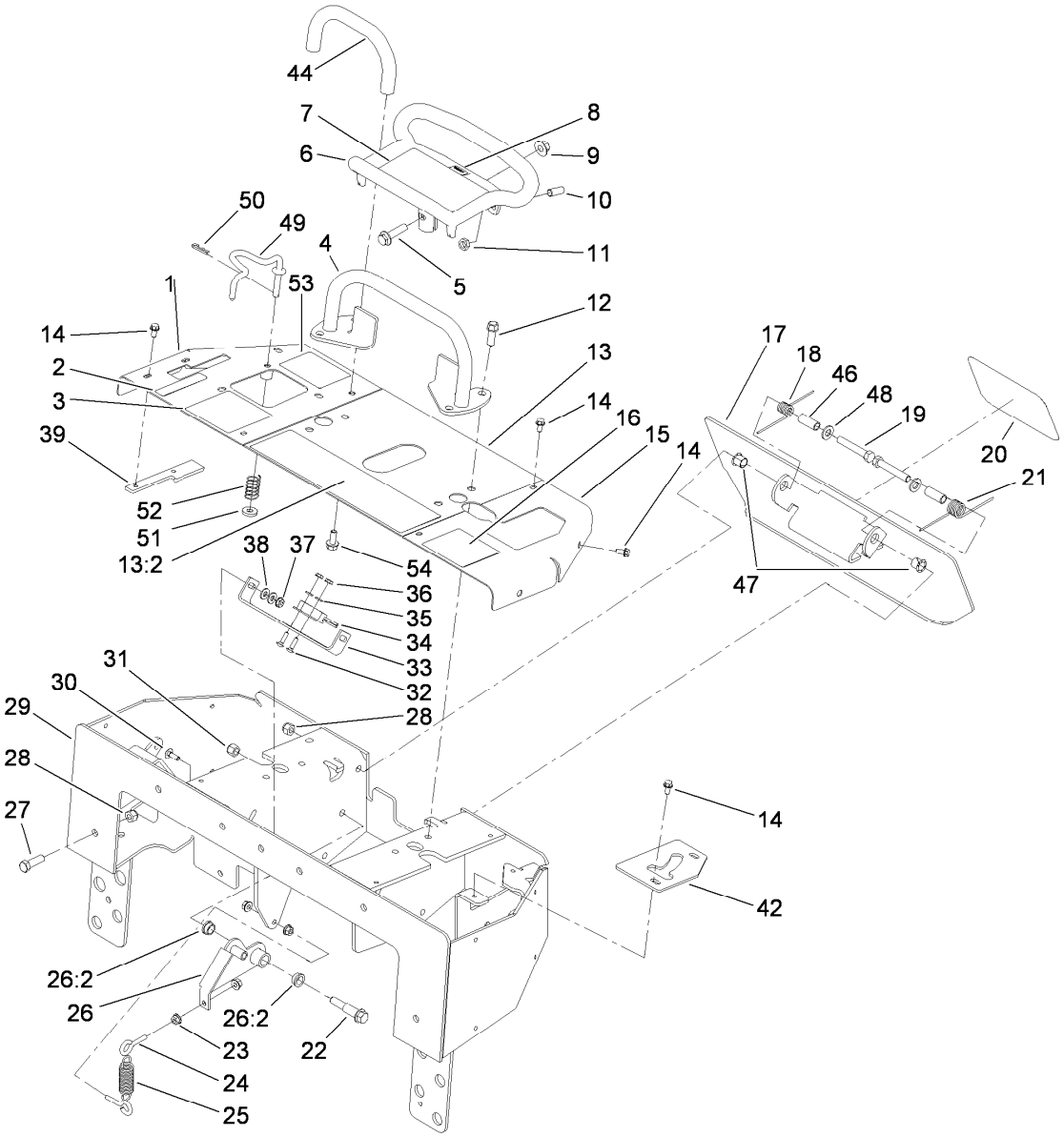

Control Panel Assembly

Ref.	Part Number	Qty.	Description
1	115-4836-01	1	Panel-RH
2	115-4859	1	Decal-Brake
3	115-4857	1	Decal-Control, Loader
4	106-7715	1	Bar-Reference
5	3234-18	1	Screw-HHF
6	120-5380-03	1	Handle-Control
7	115-4020	1	Decal-Traction
8	98-1459	1	Decal
9	32128-43	1	Nut-Flange
10	3247-6	2	Screw-Set
11	3218-3	2	Nut-Jam
12	95-1726	4	Screw-Taptite
13	108-4643	1	Center Panel ASM
13:2	115-4860	1	Decal-Danger
14	9266714	11	Screw-HWH
15	112-2737-01	1	Panel-LH
16	115-4861	1	Decal-Control, Auxiliary
17	112-2786-03	1	Plate-Reverse
18	98-8425	1	Spring-Torsion, LH
19	323-11	2	Screw-HH
20	105-1217	1	Decal

Ref.	Part Number	Qty.	Description
21	98-8424	1	Spring-Torsion, RH
22	66-0560	1	Bolt-Shoulder
23	32128-32	4	Nut-HHF
24	71-2870	2	Bolt-Eye
25	108-4724	1	Spring-Extension
26	100-4203	1	Neutral Centering Lever ASM
26:2	256-156	2	Bushing-Flange
27	323-7	5	Screw-HH
28	3296-39	7	Nut-Lock, NI
29	110-0228-01	1	Panel-Control
30	3229-1	2	Screw-CARR
31	3296-6	1	Nut-Lock
32	3229-20	2	Screw-CARR
33	100-1263	1	Plate-Switch
34	100-1270	1	Switch-Proximity
35	3256-51	2	Washer-Flat
36	32149-7	2	Nut-Keps
37	32149-2	2	Nut-Keps
38	3256-22	4	Washer-Flat
39	112-2691-01	1	Plate-Locking, Brake

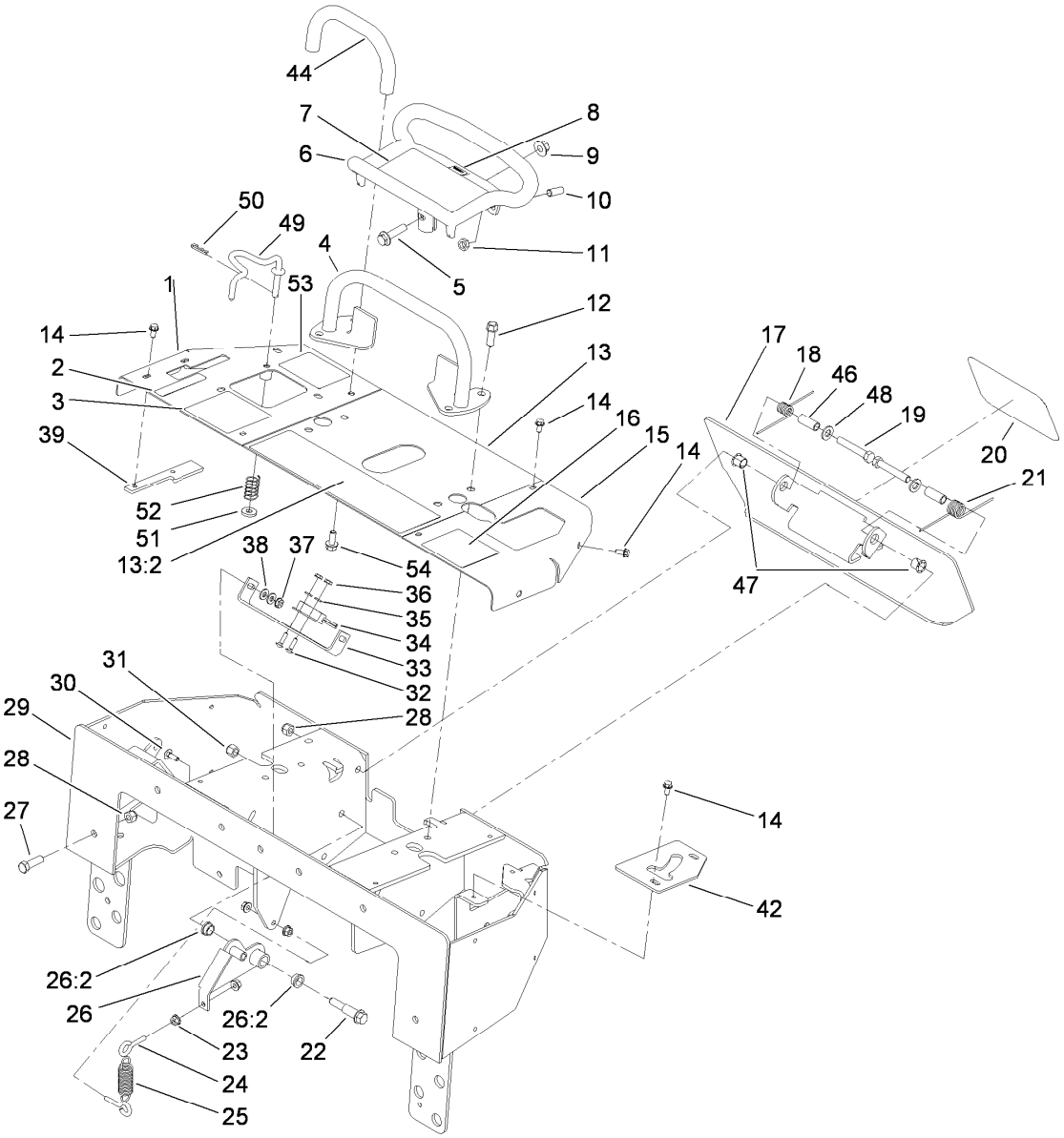

Control Panel Assembly (continued)

Ref.	Part Number	Qty.	Description
42	112-2749-01	1	Plate-Stop
44	112-2620	1	Bar-Reference
46	114-1337	2	Spacer-Spring
47	256-257	2	Bushing-Nyliner
48	3256-24	2	Washer-Plain
49	115-4580	1	Rod-Interlock

Ref.	Part Number	Qty.	Description
50	3290-307	1	Pin-Cotter
51	88-7200	1	Washer-Flat
52	85-6750	1	Spring-Control
53	115-4862	1	Decal-Loader Lock
54	3234-5	2	Screw-HHF

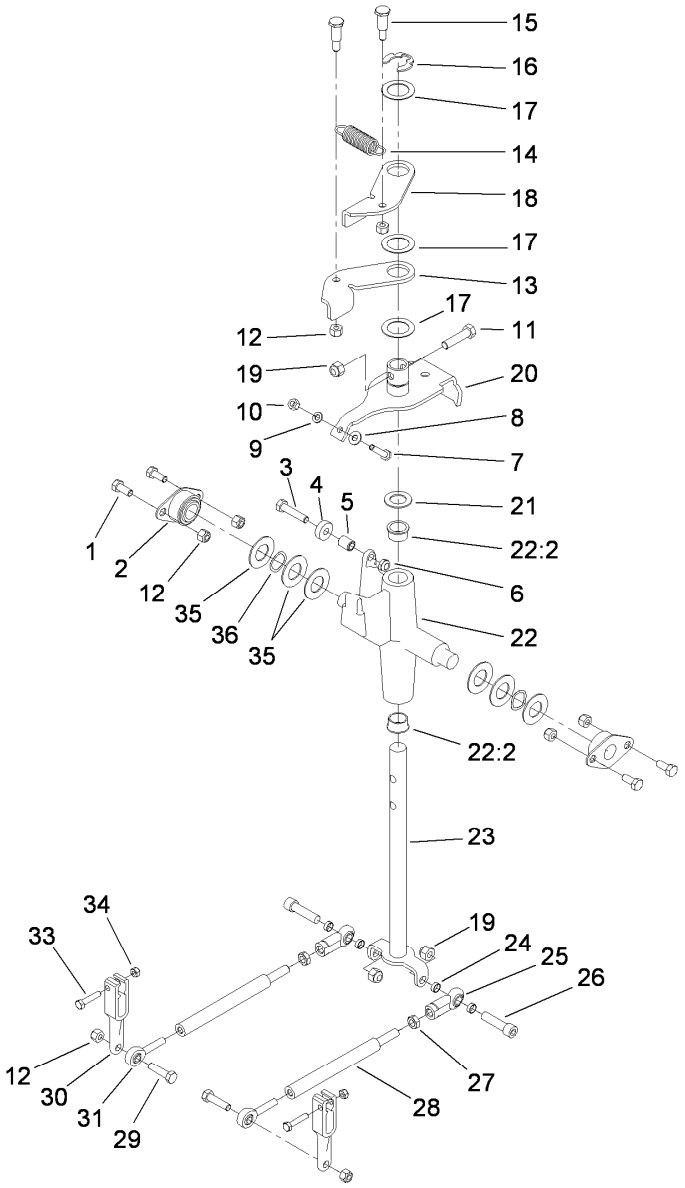

Traction Control Assembly

Ref.	Part Number	Qty.	Description
1	322-3	4	Screw-HH
2	68-2970	2	Bushing
3	322-7	1	Screw-HH
4	251-259	1	Bearing-Ball
5	88-7450	1	Spacer-Lever, Control
6	3296-47	1	Nut-Lock,NI
7	114-0282	1	Screw-HH
8	3256-22	1	Washer-Flat
9	3253-3	1	Washer-Lock
10	3217-5	1	Nut-Hex
11	323-8	1	Screw-HH
12	3296-29	8	Nut-Lock, NI
13	98-8407	1	Lever-Return, RH
14	108-4724	1	Spring-Extension
15	63-2650	2	Screw-Shoulder
16	32151-91	1	Ring-Retaining
17	108-9743	3	Washer-Plain
18	98-8408	1	Lever-Return, LH

Ref.	Part Number	Qty.	Description
19	3296-39	3	Nut-Lock, NI
20	112-2783	1	Lever-Pivot
21	257-8	1	Washer-Thrust
22	106-5737	1	Control Support ASM
22:2	256-252	2	Bearing-Flange
23	117-6335	1	Rod-Drive
24	117-9915	4	Spacer
25	103-1167	2	Joint-Ball End, LH
26	3274-2	2	Screw-HSH
27	3220-16	2	Nut-Hex Jam, LH
28	117-9900	2	Rod-Linkage
29	322-6	2	Screw-HH
30	117-3964-03	2	Arm-Control, Pump
31	117-9969	2	Bearing-Rod End, RH
33	33113-030	2	Screw-HH
34	33023-00	2	Nut-Lock
35	3256-39	2	Washer-Flat
36	95-3703	2	Washer-Spring, Wave

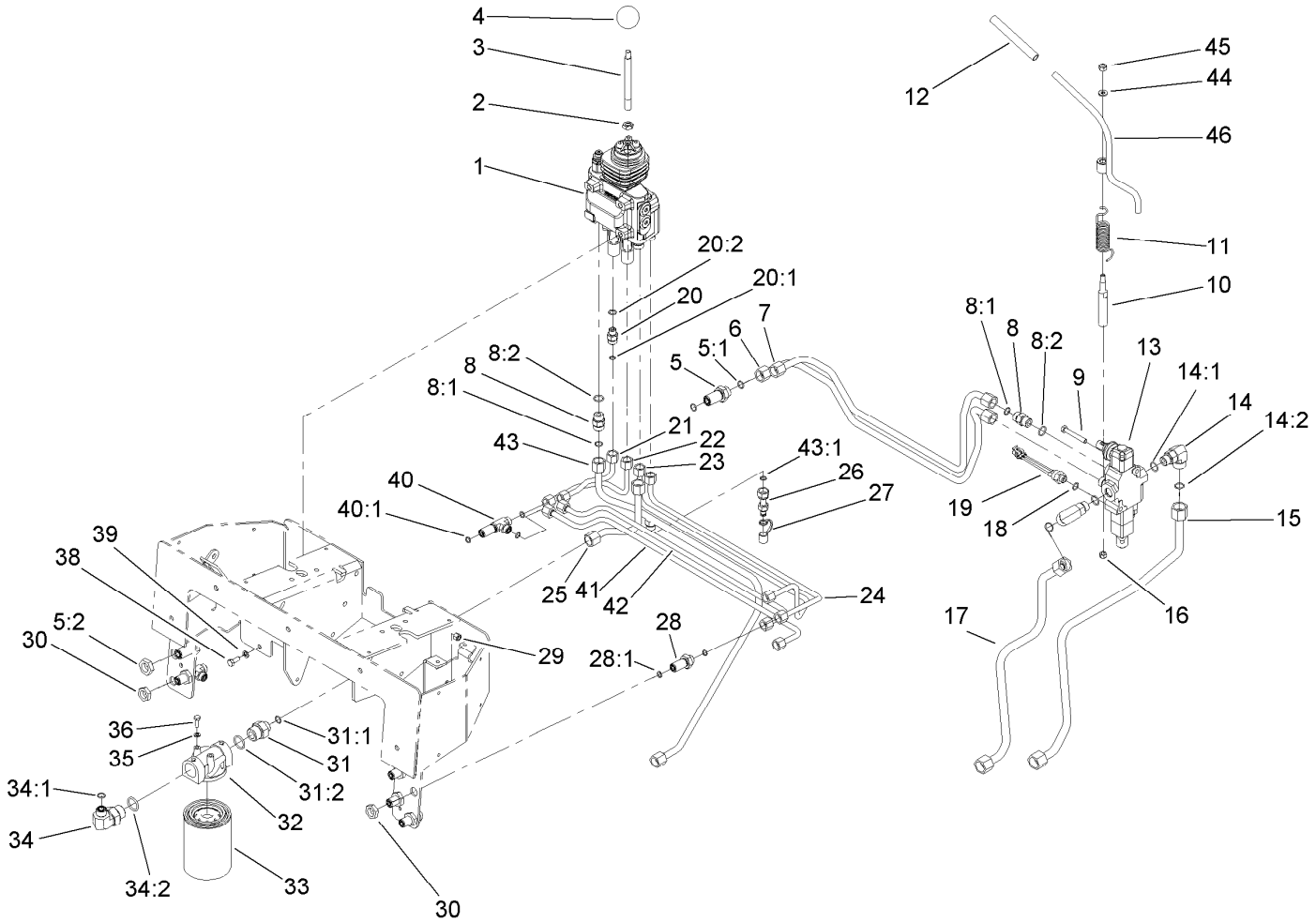

Principal Hydraulic Assembly

Ref.	Part Number	Qty.	Description
1	106-9307	1	2 Spool Valve ASM
2	51-2070	1	Nut
3	108-4675	1	Shaft-Handle, Loader
4	233-21	1	Knob
5	340-161	2	Fitting-Bulkhead
5:1	237-30	2	O-Ring
5:2	340-127	1	Nut-Bulkhead
6	106-9310	1	Tube-HYD
7	106-9311	1	Tube-HYD
8	340-4	4	Fitting-Straight
8:1	237-30	1	O-Ring
8:2	237-79	1	O-Ring
9	322-11	2	Screw-HH
10	104-2827	1	Spacer-Hiflo
11	112-2738	1	Spring-Torsion
12	112-2605	1	Grip-Rubber
13	104-2831	1	1 Spool Valve ASM
14	340-153	2	Fitting-Elbow, 90 DEG
14:1	237-79	1	O-Ring
14:2	237-151	1	O-Ring
15	106-9309	1	Tube-HYD
16	48-7740	1	Screw
17	104-5707	1	Tube-HYD
18	237-42	1	O-Ring
19	72-4310	1	Switch-Ball
20	340-2	4	Fitting-Straight
20:1	237-22	1	O-Ring

Ref.	Part Number	Qty.	Description
20:2	237-42	1	O-Ring
21	106-9315	1	Tube-HYD
22	106-9313	1	Tube-HYD
23	106-9312	1	Tube-HYD
24	106-9314	1	Tube-HYD
25	106-9385	1	Tube-HYD
26	86-5480	1	Nipple-Test
27	354-79	1	Cap-Dust
28	340-71	4	Fitting-Straight, Bulkhead
28:1	237-22	2	O-Ring
29	3296-29	2	Nut-Lock, NI
30	340-70	6	Nut-Lock
31	100-4240	1	Fitting-STR
31:1	237-30	1	O-Ring
31:2	237-81	1	O-Ring
32	92-5821	1	Head-Filter
33	86-3010	2	Filter-Oil
34	340-131	1	Fitting-HYD, 90 DEG
34:1	237-30	1	O-Ring
34:2	237-81	1	O-Ring
35	3253-3	2	Washer-Lock
36	321-4	2	Screw-HH
38	322-4	3	Screw-HH
39	3253-4	3	Washer-Lock
40	340-68	2	Fitting-Tee, Bulkhead
40:1	237-22	3	O-Ring
41	106-9316	1	Tube-HYD
42	106-9317	1	Tube-HYD

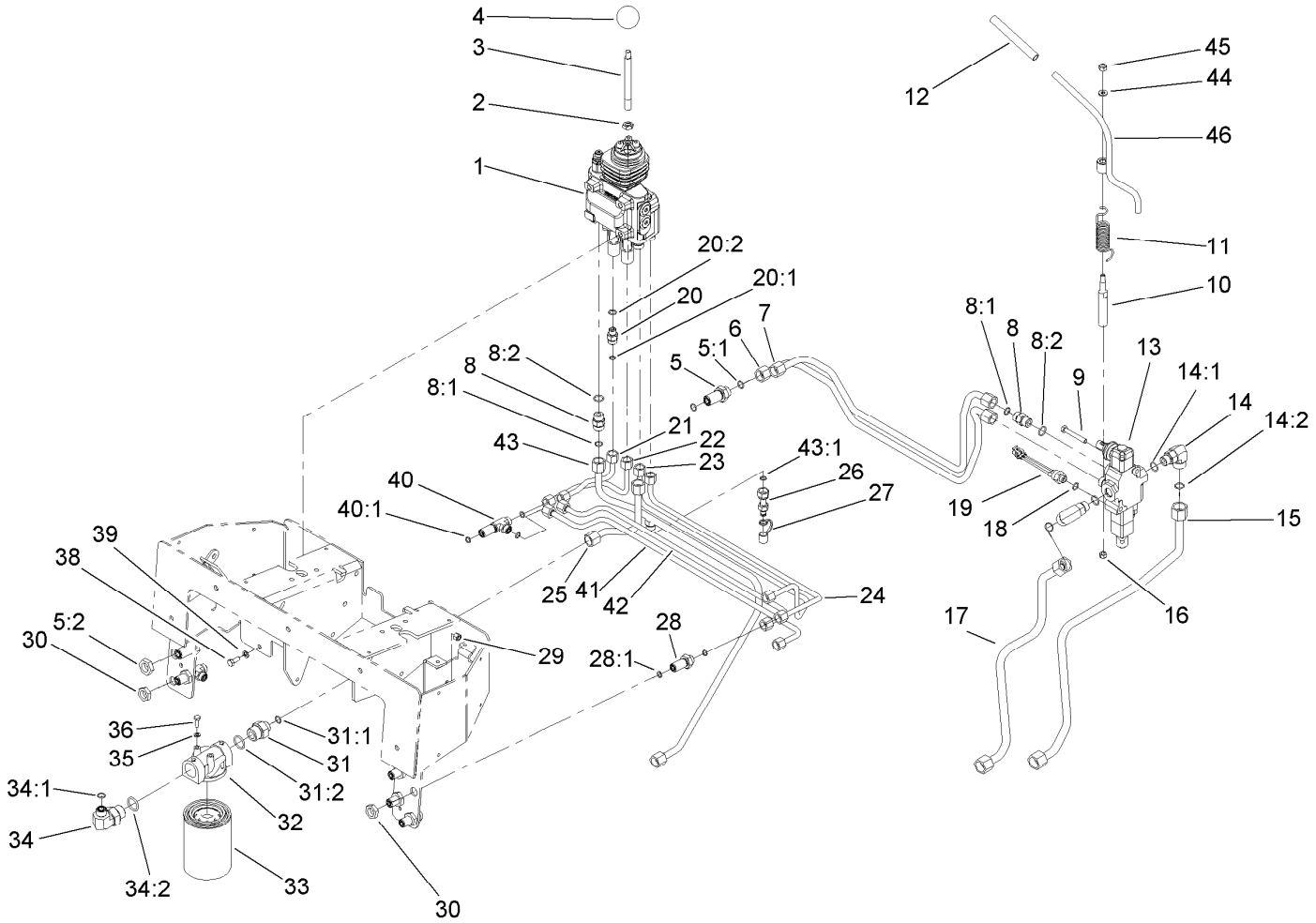

Principal Hydraulic Assembly (continued)

Ref.	Part Number	Qty.	Description
43	106-9387	1	HYD Tube ASM
43:1	237-22	1	O-Ring
44	3256-16	1	Washer-Flat
45	3296-42	1	Nut-Lock, NI
46	112-2739	1	Lever-Auxiliary

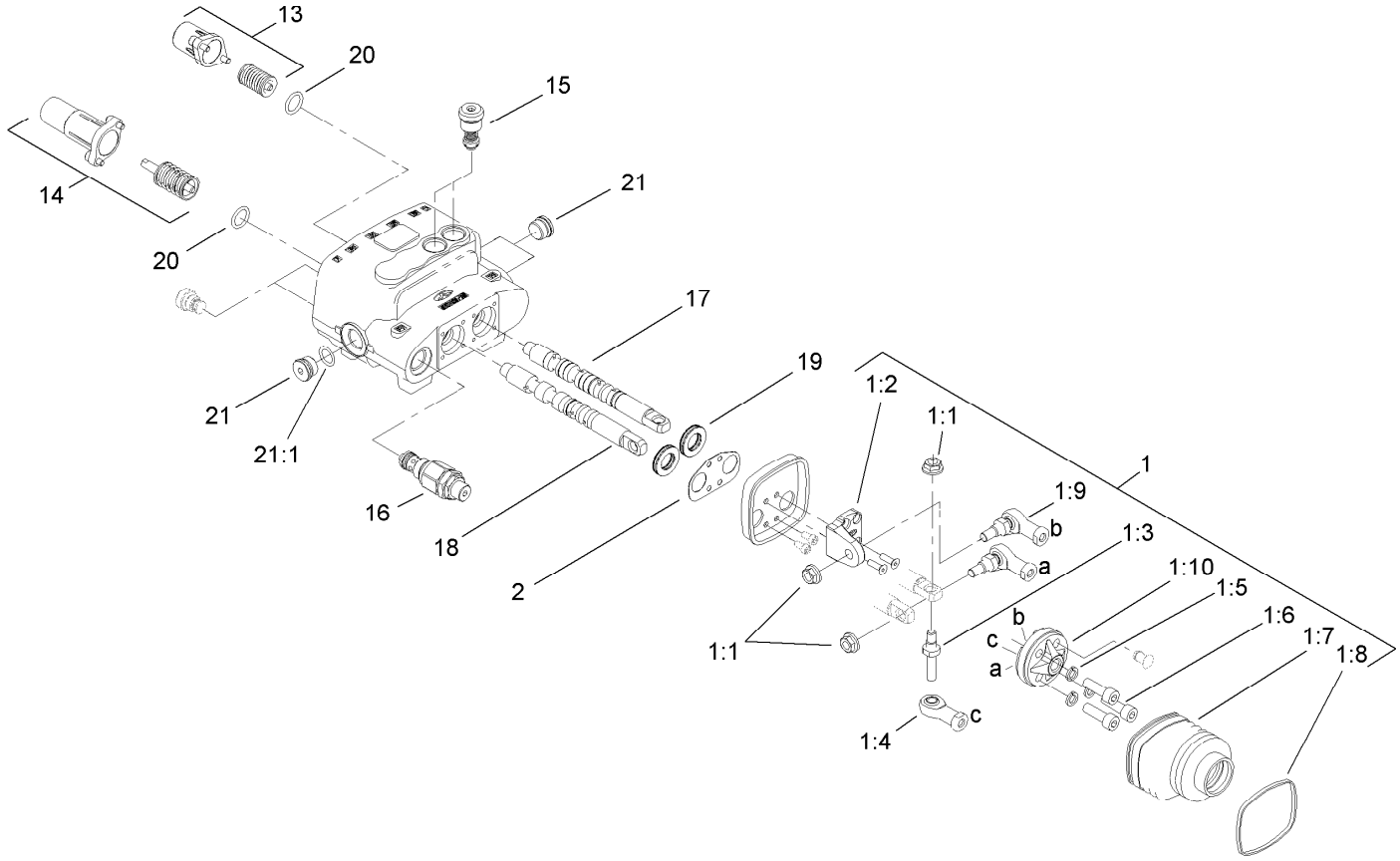

Two Spool Valve Assembly No. 106-9307

Ref.	*Part Number*	*Qty.*	*Description*
1	106-7724	1	Joystick Kit
1:1	98-0668	3	Nut
1:2	106-7726	1	Pivot-Joystick
1:3	106-7727	1	Pin-Joystick
1:4	106-7728	1	End-Rod
1:5	42-9850	3	Washer-Lock, Spring
1:6	98-5828	3	Screw-HSH
1:7	106-7729	1	Bellow-Rubber
1:8	3290-379	1	Tie-Cable
1:9	106-7730	2	Joint-Joystick
1:10	106-7731	1	Holder-Articulated
2	106-7725	1	Seal-Joystick
13	106-7732	1	Valve Spring Kit
14	106-7733	1	Detent Spring Kit
15	106-7734	2	Valve-Relief
16	106-7735	1	Valve-Relief, Main
17	106-7736	1	Spool-Valve
18	106-7737	1	Spool-Valve
19	106-7738	2	Seal-Valve, Spool
20	106-7719	2	Seal-Valve
21	353-988	3	Plug-Hex
21:1	237-79	1	O-Ring

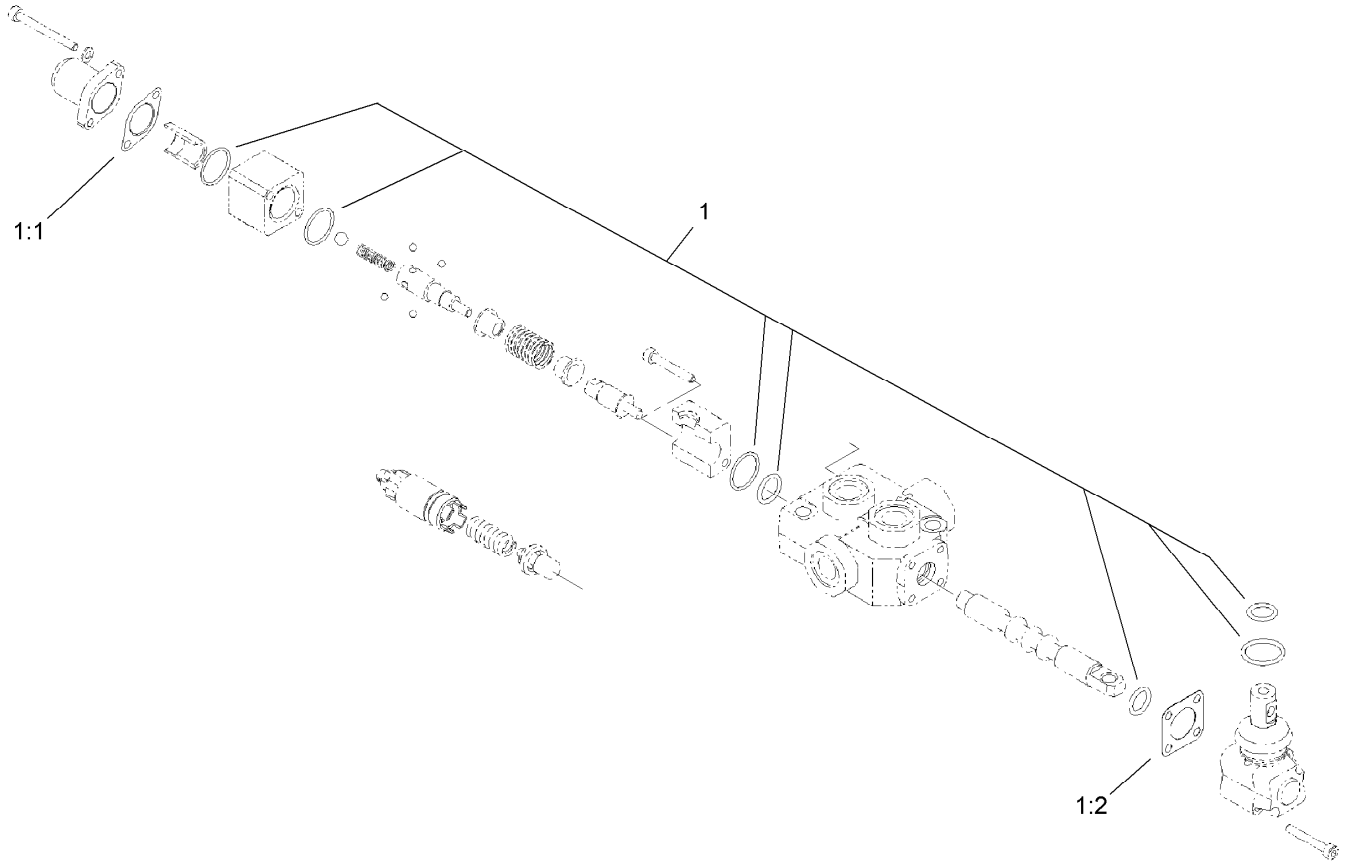

One Spool Valve Assembly No. 104-2831

Ref.	*Part Number*	*Qty.*	*Description*
1	99-4390	1	Seal Kit
1:1	99-3074	4	Gasket
1:2	99-3075	8	Gasket

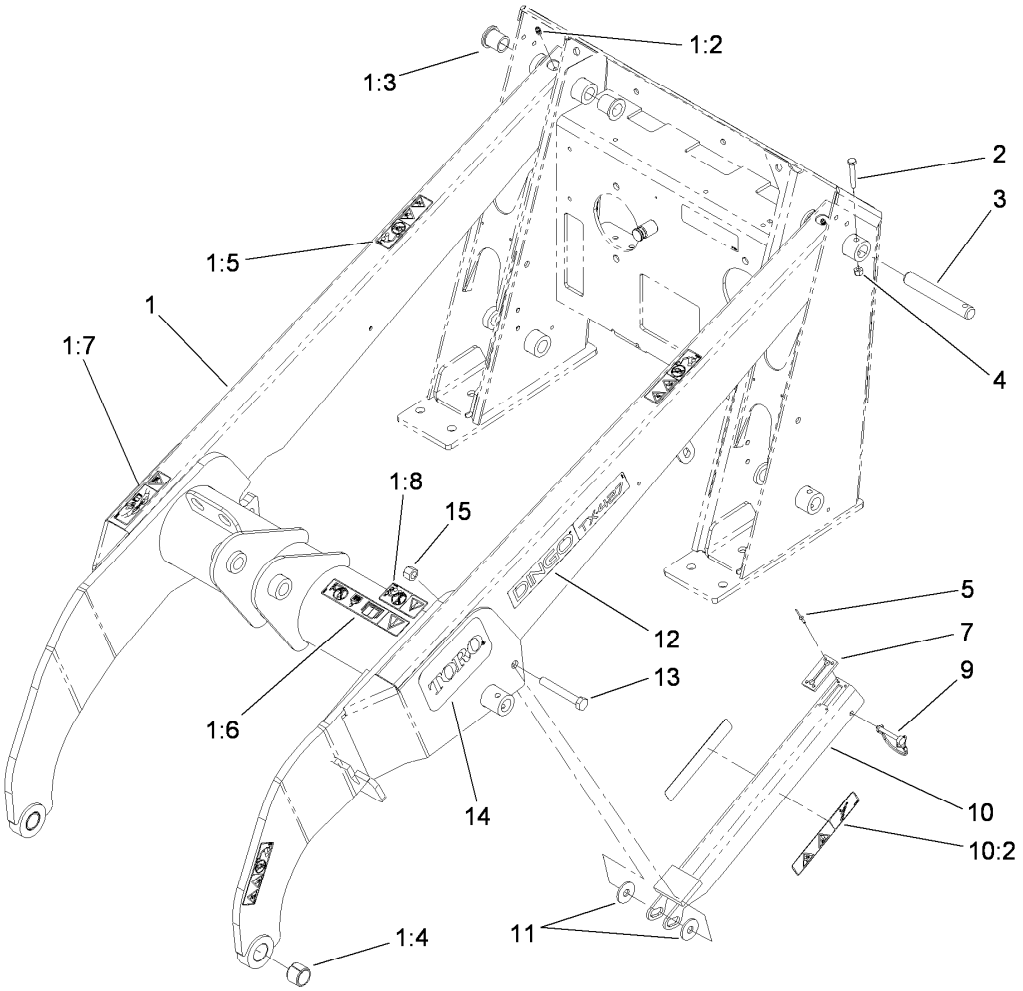

Loader Arm Assembly

Ref.	Part Number	Qty.	Description
1	108-4638	1	Loader Arm ASM
1:2	302-5	2	Fitting-Grease
1:3	95-3577	4	Bushing
1:4	98-4871	2	Bushing-Tension
1:5	100-8821	4	Decal-Warning, Pinch
1:6	115-4856	1	Decal-Caution
1:7	115-4855	1	Decal-Caution
1:8	100-8822	1	Decal-No Rider
2	322-10	7	Screw-HH
3	104-2849	7	Pin-Locking
4	3296-29	7	Nut-Lock, NI
5	95-1687	4	Rivet
7	98-0083	1	Stop-Rubber
9	112-2583	1	Pin-Locking
10	108-4639	1	Locking Arm ASM
10:2	115-4858	2	Decal-Danger
11	68-1440	2	Washer-Rubber
12	115-4867	2	Decal
13	325-14	1	Screw-HH
14	105-1217	2	Decal
15	3296-23	1	Nut-Lock, NI

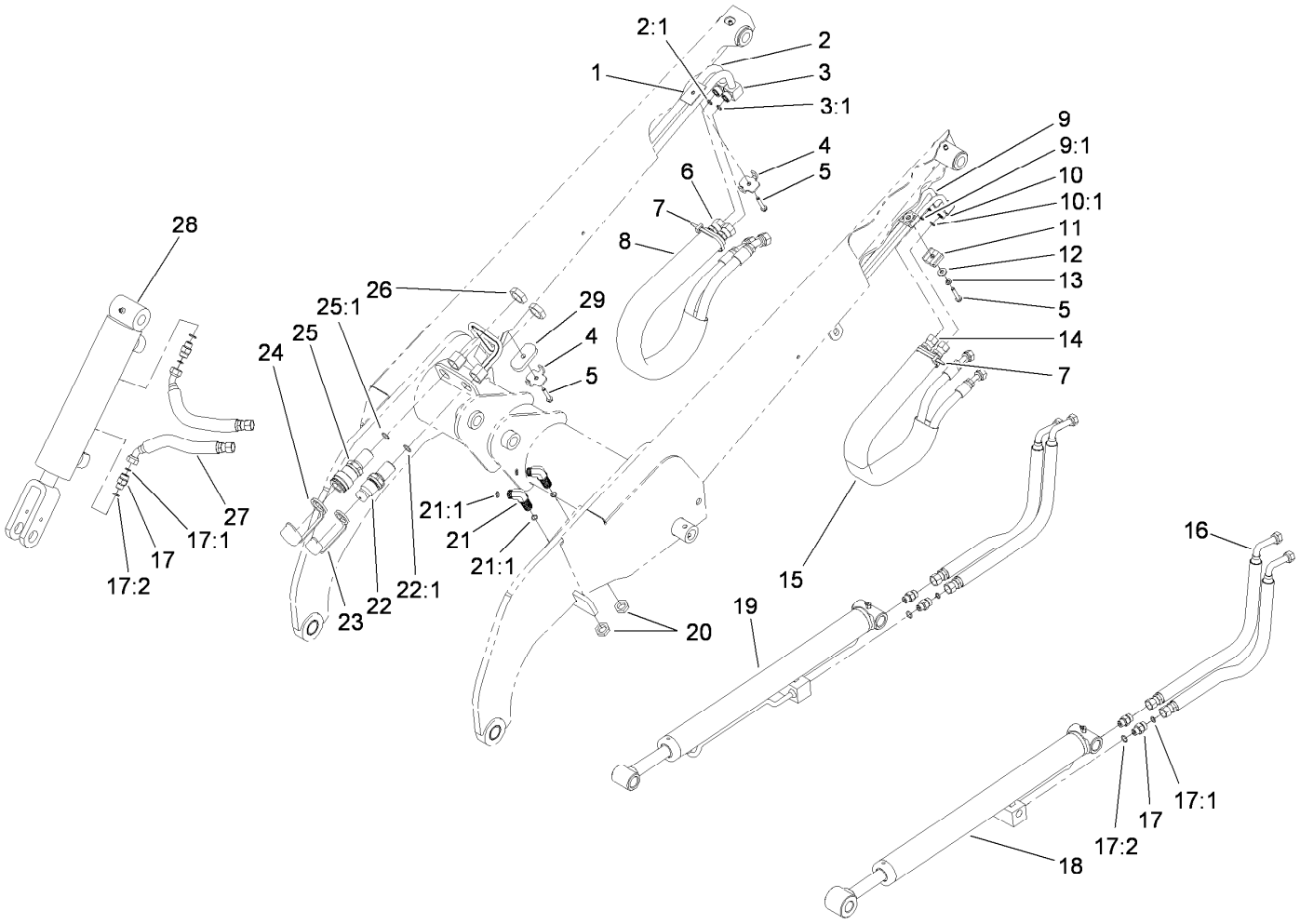

Loader Arm Hydraulic Assembly

Ref.	Part Number	Qty.	Description
1	106-9366	1	Spacer-Hardline
2	108-6319	1	HYD Tube ASM
2:1	237-22	1	O-Ring
3	112-2563	1	HYD Tube ASM
3:1	237-22	1	O-Ring
4	98-0237	2	Plate-Clamp, Tube
5	94-2691	3	Screw-HWH Taptite
6	98-0242	2	Hose-HYD
7	3290-378	2	Tie-Cable
8	100-6128	1	Sleeve-Protective
9	106-9364	1	HYD Tube ASM
9:1	237-22	1	O-Ring
10	106-9365	1	HYD Tube ASM
10:1	237-22	1	O-Ring
11	56-7973	2	Clamp-Tube
12	3256-2	1	Washer-Flat
13	3253-3	1	Washer-Lock
14	98-0213	2	Hose-HYD
15	100-6127	1	Sleeve-Protective
16	98-0216	4	Hose-HYD

Ref.	Part Number	Qty.	Description
17	340-2	6	Fitting-Straight
17:1	237-22	1	O-Ring
17:2	237-42	1	O-Ring
18	104-6267	1	LH Lift Cylinder ASM
19	104-6269	1	RH Lift Cylinder ASM
20	340-70	2	Nut-Lock
21	340-154	2	Union-Bulkhead
21:1	237-22	2	O-Ring
22	105-8395	1	Bulkhead Nipple ASM
22:1	237-65	1	O-Ring
22:2	100-6120	1	Seal Kit ●
23	100-8815	1	Cap-Dust, Nipple
24	100-8816	1	Cap-Dust, Coupler
25	105-8394	1	Bulkhead Coupler ASM
25:1	237-65	1	O-Ring
26	340-74	2	Nut-Lock, Bulkhead
27	98-0207	2	Hose-HYD
28	105-8370	1	Tilt Cylinder ASM
29	112-2565	1	Plate-Hardline

● Not illustrated

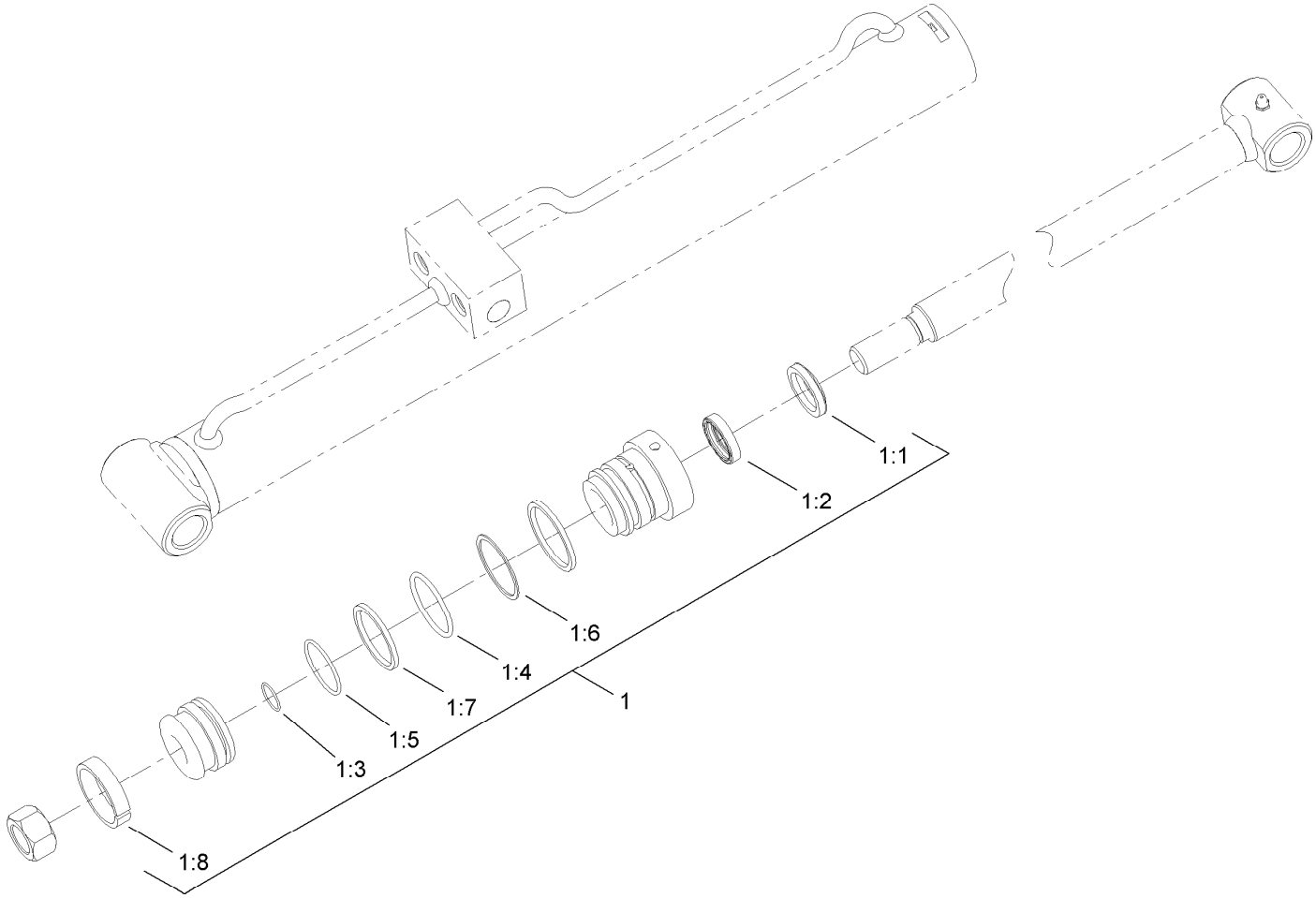

Left Hand Hydraulic Lift Cylinder Assembly No. 104-6267

Ref.	*Part Number*	*Qty.*	*Description*
1	104-6268	1	Seal Kit
1:1		1	Wiper ●
1:2		1	Seal ●
1:3		1	O-Ring ●
1:4		1	O-Ring ●
1:5		1	O-Ring ●
1:6		1	Back-Up ●
1:7		1	Seal ●
1:8		1	Wear Ring ●

● Not serviced separately

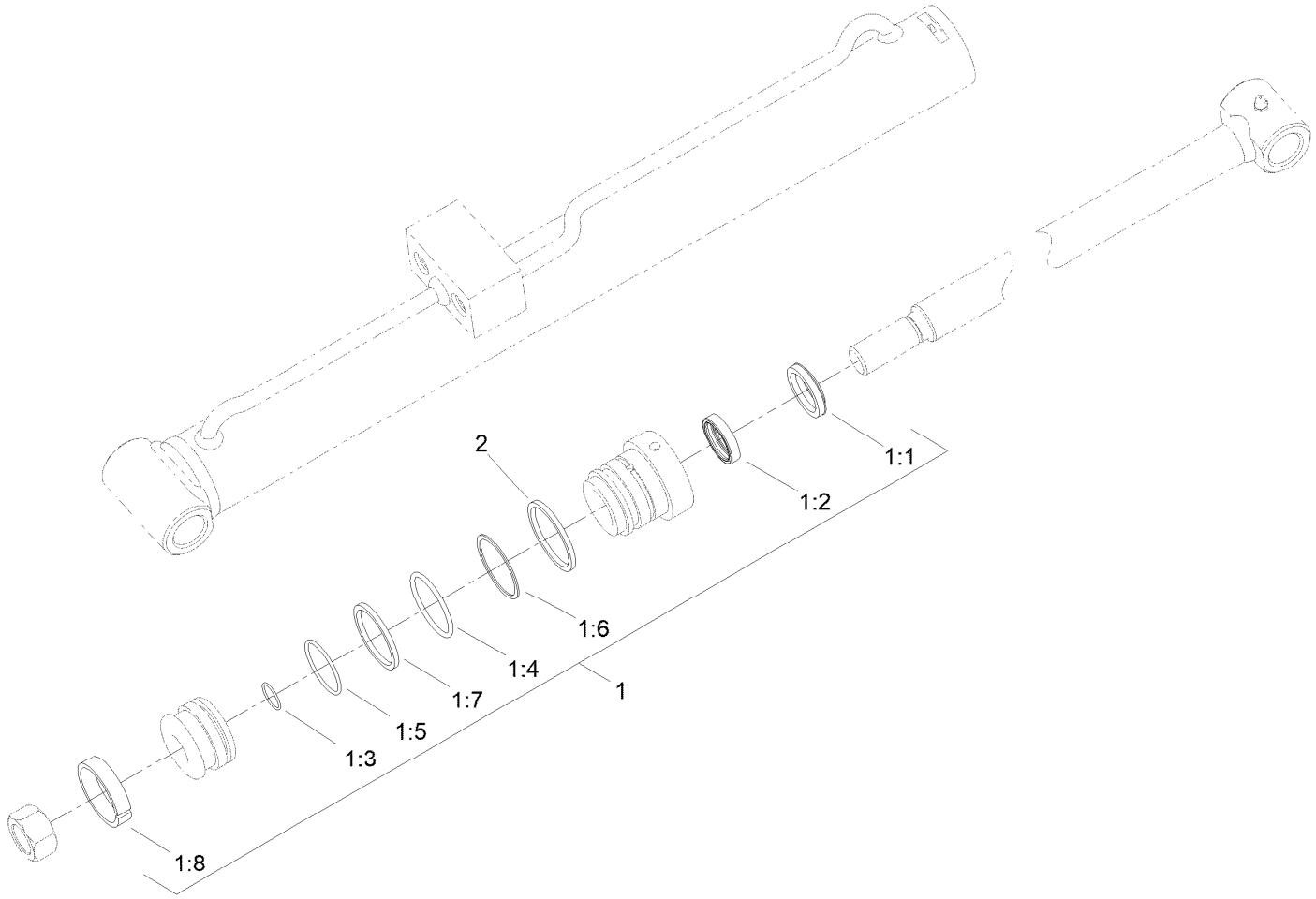

Right Hand Hydraulic Lift Cylinder Assembly No. 104-6269

Ref.	*Part Number*	*Qty.*	*Description*
1	104-6268	1	Seal Kit
1:1		1	Wiper ●
1:2		1	Seal ASM ●
1:3		1	Seal-Dust ●
1:4		1	Seal-Dust ●
1:5		1	Seal-Dust ●
1:6		1	Back-Up ●
1:7		1	Seal ASM ●
1:8		1	Ring-Wear ●
2	161-7281	1	Ring - Retaining

● Not serviced separately

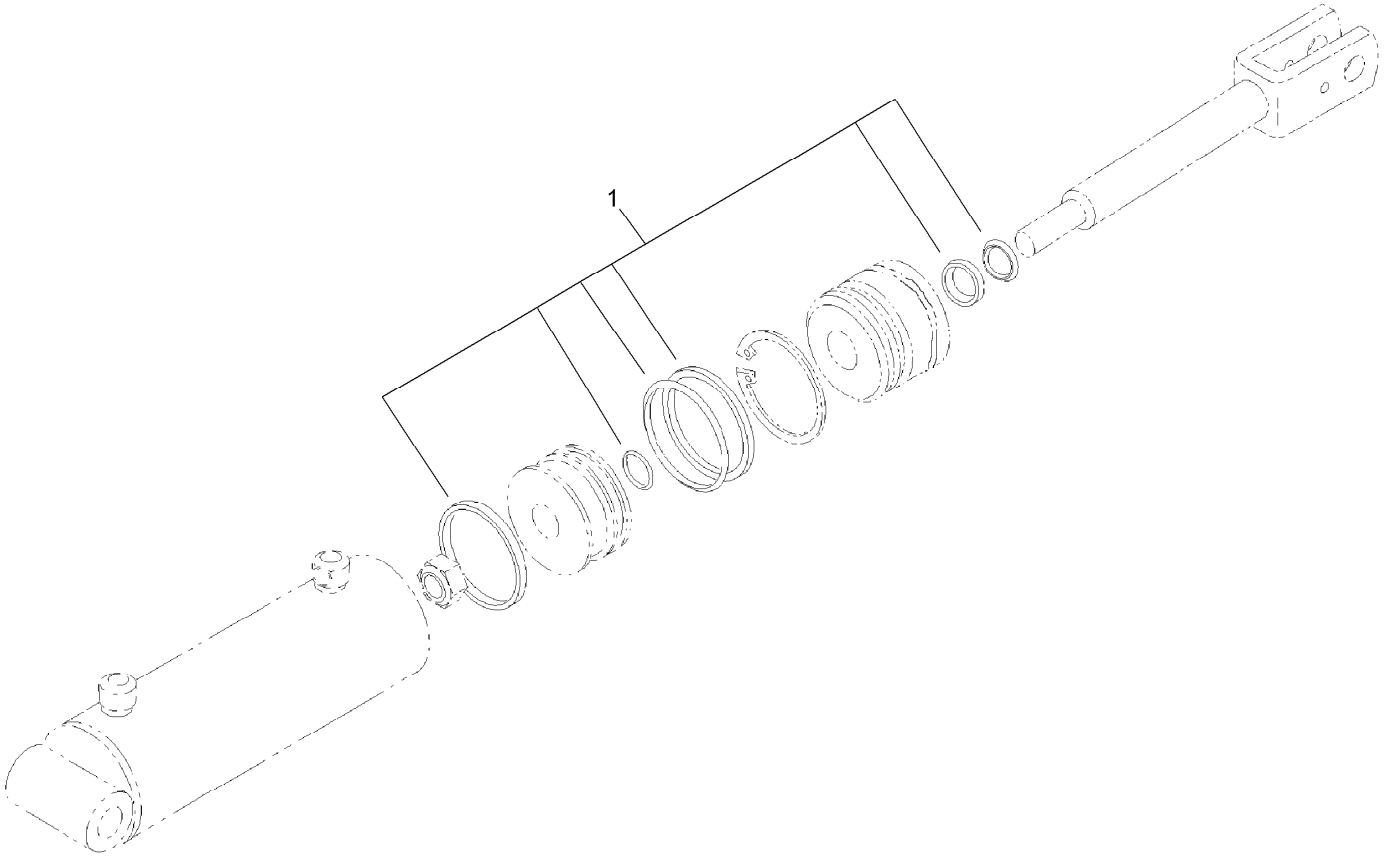

Hydraulic Cylinder Assembly No. 105-8370

Ref.	*Part Number*	*Qty.*	*Description*
1	106-7567	1	Seal Kit

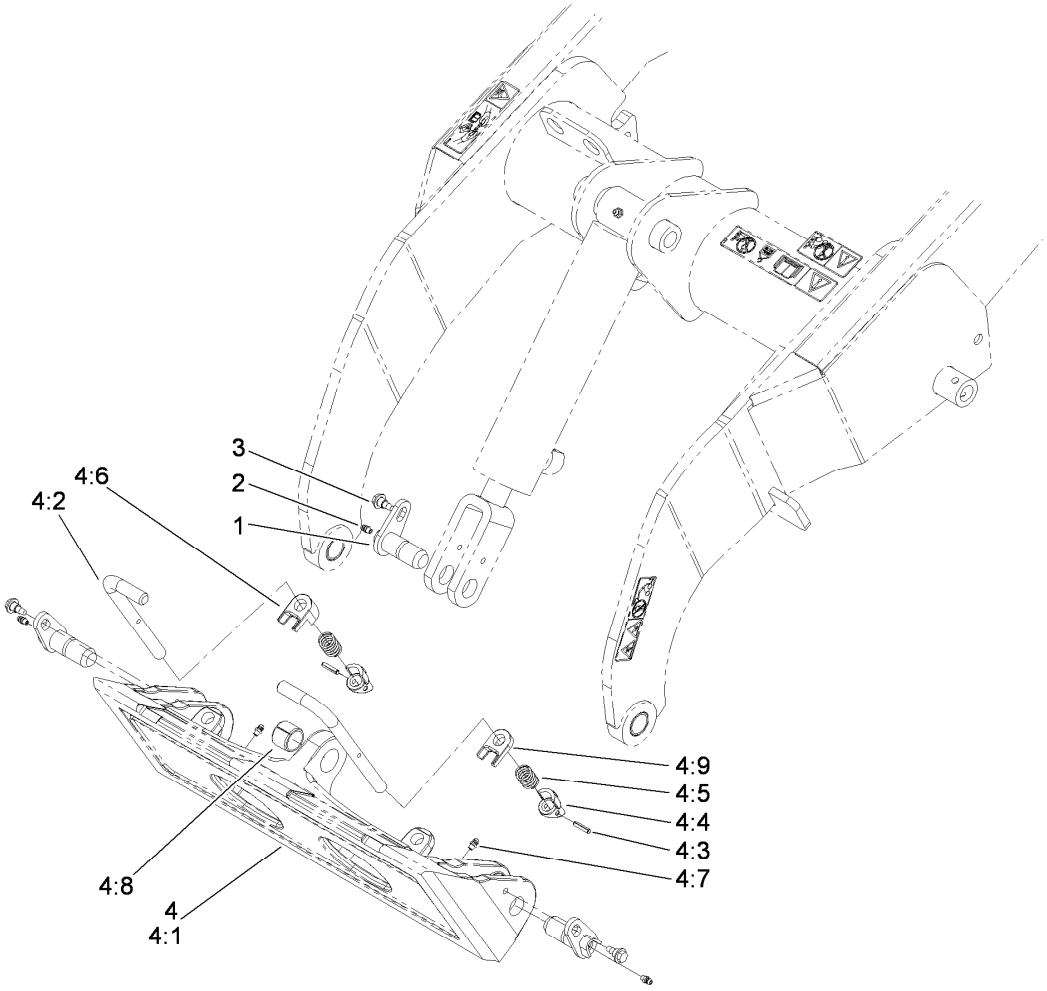

Quick Attach Assembly

Ref.	*Part Number*	*Qty.*	*Description*
1	112-2609	3	Pin-Pivot
2	302-5	3	Fitting-Grease
3	99-5105	3	Screw-Shoulder
4	115-0788	1	Quick Attach ASM
4:1	115-0774-03	1	Mount-Qtach
4:2	105-8367	2	Pin-Locking
4:3	3285-1	2	Pin-Grooved
4:4	105-0246	2	Cam
4:5	98-4694	2	Spring-Compression
4:6	104-5909	1	Stop-RH
4:7	302-5	2	Fitting-Grease
4:8	98-4871	1	Bushing-Tension
4:9	104-5903	1	Stop-LH

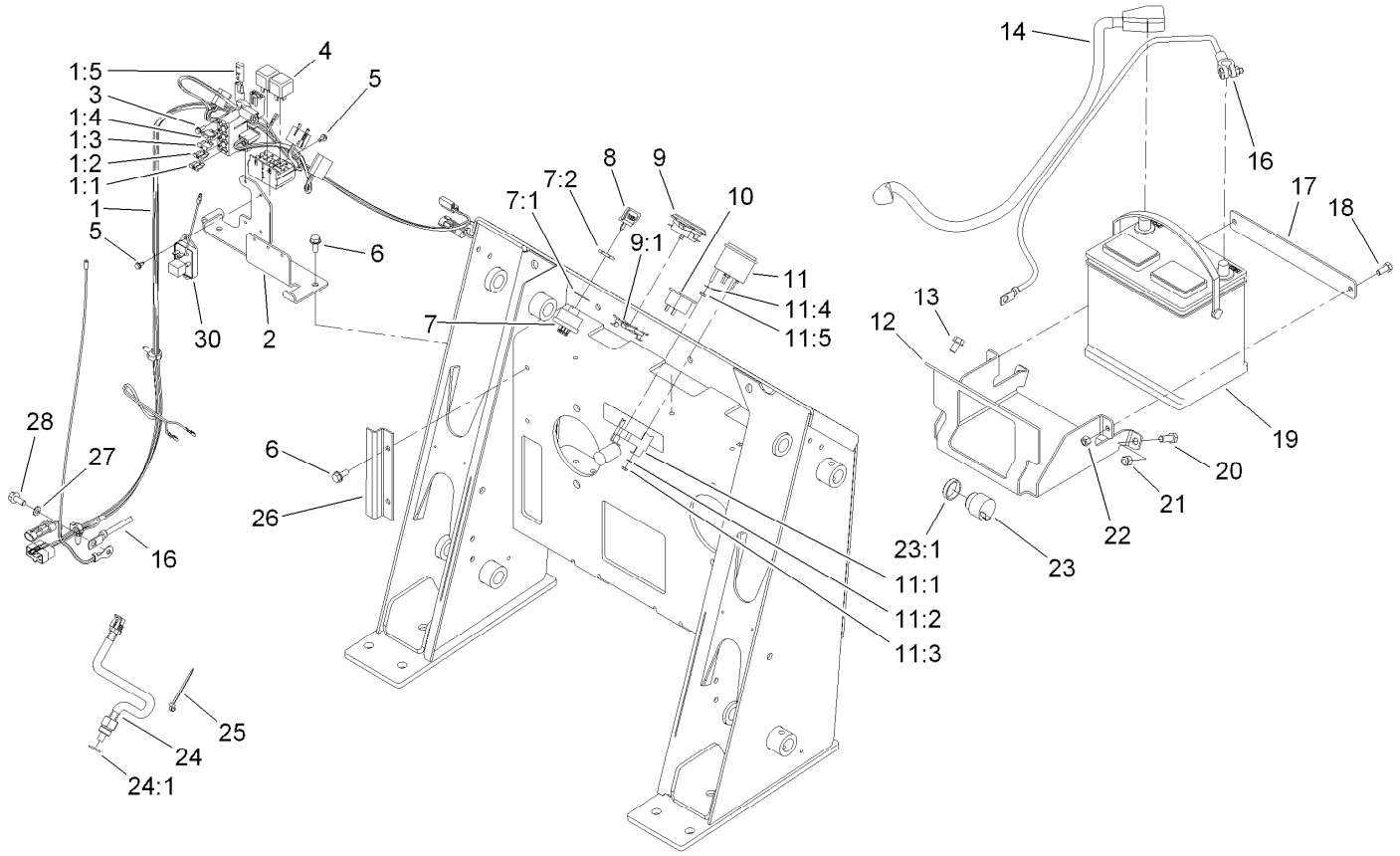

Electrical System Assembly

Ref.	Part Number	Qty.	Description
1	117-1732	1	Harness-Wire
1:1	109103	1	Fuse-Blade, 30 Amp
1:2	109102	1	Fuse-Blade, 25 Amp
1:3	218-578	1	Fuse-Blade, 10 Amp
1:4	109355	2	Fuse-Blade, 15 Amp
1:5	116-0053	1	Cap-Plug
2	117-1735-03	1	Bracket-Fuse/Relay
3	32104-4	2	Screw
4	98-7249	2	Relay
5	104-2065	4	Screw-HWH
6	32144-11	4	Screw-HWH
7	88-9830	1	Key Switch ASM
7:1	3254-5	1	Washer-Lock
7:2	218-461	1	Nut-HH
8	63-8360	3	Key-Ignition
9	104-7427	1	Inductive Hourmeter ASM
9:1	104-4234	1	Clip-Mounting
10	104-2839	1	Light-Temp, Oil
11	66-2940	1	Gauge-Fuel
11:1	100-6147	1	Bracket-Mounting, Gauge
11:2	3254-1	2	Washer-Lock, Int
11:3	3217-27	2	Nut-Hex
11:4	3255-24	3	Washer-Lock / EXT
11:5	3217-16	3	Nut-Hex
12	106-9390-01	1	Tray-Mounting, Battery
13	32144-69	2	Screw-HWHTF
14	106-5707	1	Cable-Battery, Positive
16	106-5708	1	Cable-Battery, Negative
17	105-0371-01	1	Clamp-Battery
18	322-3	2	Screw-HH
19	104-9979	1	Battery
20	323-6	2	Screw-HH
21	3296-39	2	Nut-Lock, NI
22	3296-29	2	Nut-Lock, NI
23	80-9330	1	Audio Alarm ASM
23:1	104-5107	1	Nut-Plastic, Knurled
24	98-2765	1	Switch-Temperature
24:1	237-79	1	O-Ring
25	3290-381	3	Tie-Cable
26	100-6117-01	1	Shield-Wiring
27	3255-8	1	Washer-Lock
28	33104-016	1	Screw-HHF
30	99-7422	1	Module-Delay, Ignition

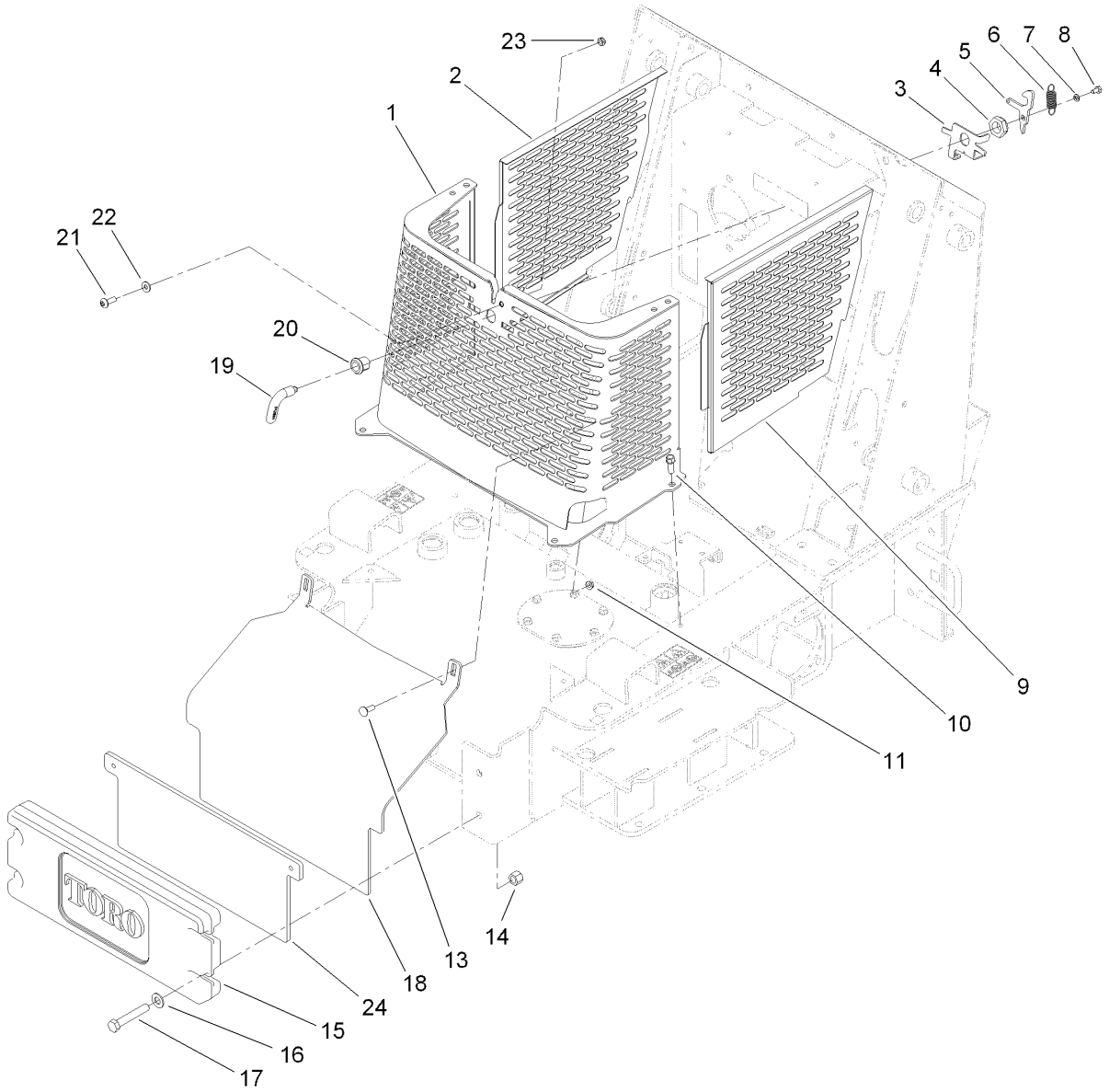

Grill Assembly

Ref.	Part Number	Qty.	Description
1	117-9998-03	1	Grill
2	106-5727-03	1	Panel-Side, RH
3	106-5729-03	1	Bracket-Latch
4	3296-60	1	Nut-Lock, NI
5	106-5728	1	Cam-Latch
6	104-0869	1	Spring
7	3253-3	1	Washer-Lock
8	321-2	1	Screw-HH
9	106-5726-03	1	Panel-Side, LH
10	95-1726	4	Screw-Taptite
11	32128-20	2	Nut-HF
13	3230-28	2	Screw-CARR

Ref.	Part Number	Qty.	Description
14	3296-23	4	Nut-Lock, NI
15	99-6166-01	1	Counterweight-Front
16	3256-26	4	Washer-Flat
17	325-12	4	Screw-HH
18	117-9994-03	1	Plate-Front
19	108-5639	1	Handle-Latch
20	106-9335	1	Housing-Latch
21	107-8021	1	Screw-PTH
22	3256-2	1	Washer-Flat
23	3296-47	1	Nut-Lock,NI
24	117-9995-03	1	Plate-Counterweight

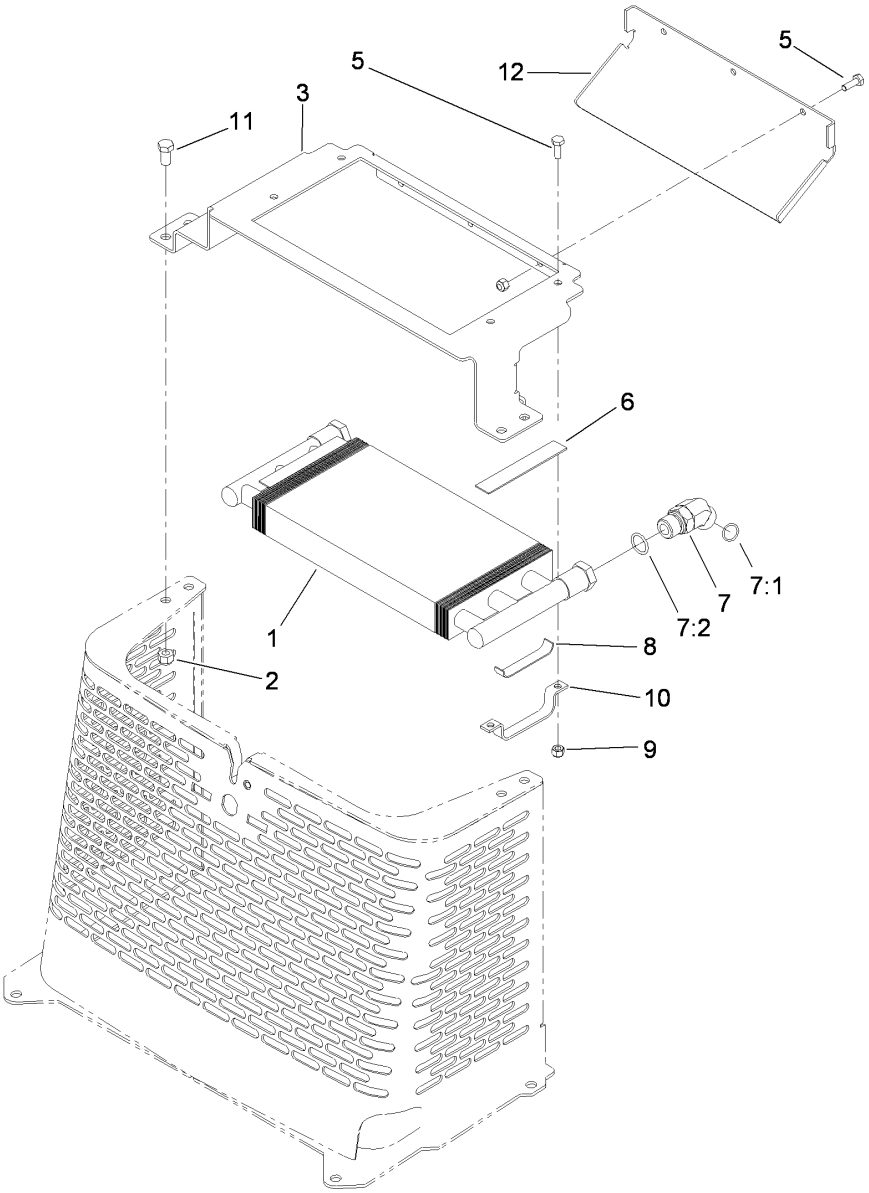

Hydraulic Oil Cooler Assembly

Ref.	Part Number	Qty.	Description
1	105-0352	1	Exchanger-Heat
2	3296-39	4	Nut-Lock, NI
3	120-5360-03	1	Bracket-Mounting, Cooler
5	321-4	7	Screw-HH
6	94-9566	2	Pad-Footrest
7	340-14	2	Fitting-HYD, 45 DEG
7:1	237-65	1	O-Ring
7:2	237-80	1	O-Ring
8	104-2816	2	Pad-Support
9	3296-42	7	Nut-Lock, NI
10	104-2803	2	Support-Cooler
11	3234-42	4	Screw-HHF
12	115-0798-03	1	Deflector-Cooler

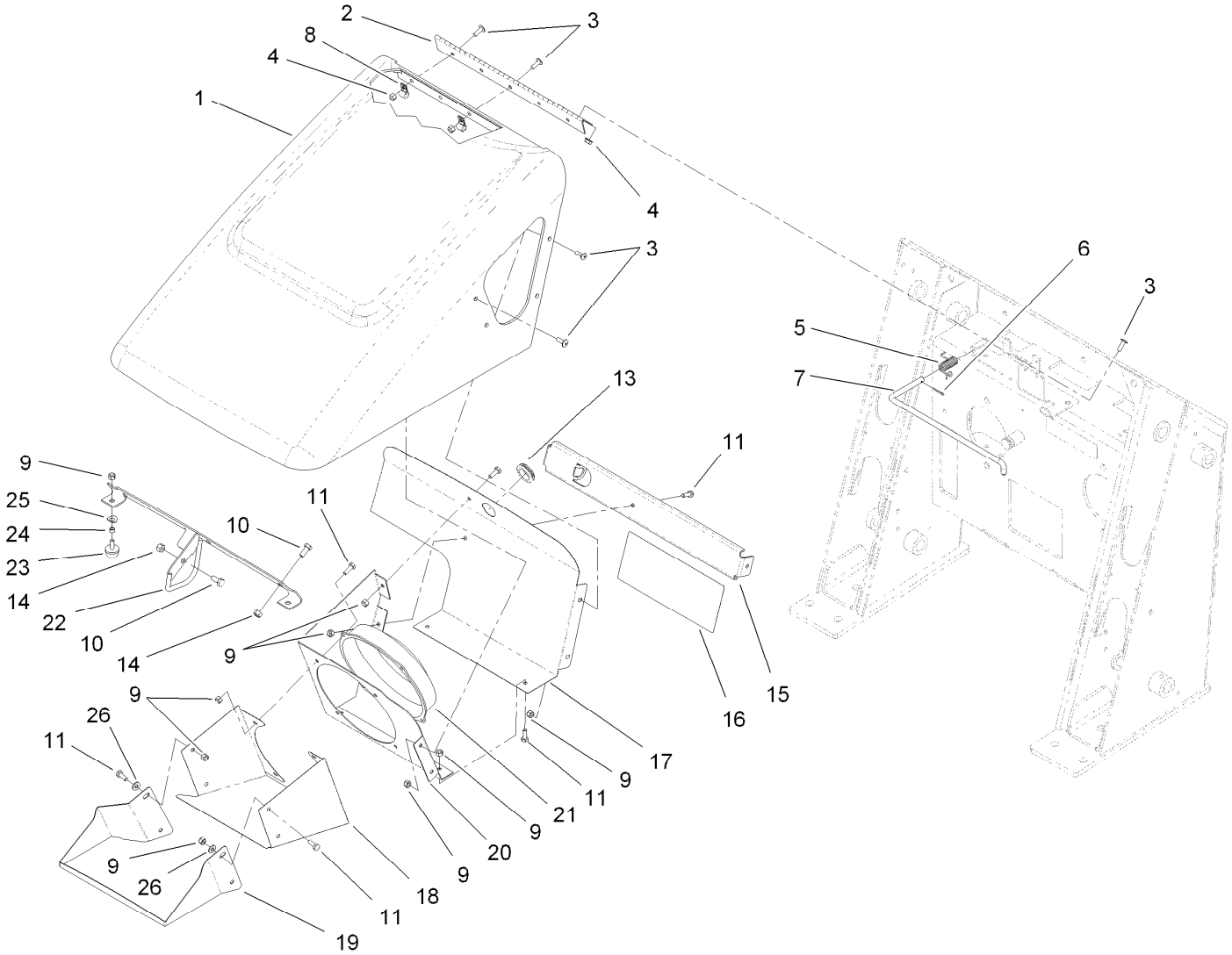

Hood Assembly

Ref.	Part Number	Qty.	Description
1	114-1363	1	Hood
2	100-1284	1	Hinge-Hood
3	9114604	14	Screw-Head, Truss
4	32128-33	6	Nut-HF
5	106-2584	1	Spring-Torsion
6	3272-6	1	Pin-Cotter
7	106-2554	1	Rod-Support, Hood
8	2412-91	2	Clamp
9	3296-42	22	Nut-Lock, NI
10	322-3	4	Screw-HH
11	321-4	12	Screw-HH
13	240-5	1	Grommet
14	3296-29	4	Nut-Lock, NI

Ref.	Part Number	Qty.	Description
15	115-4849-03	1	Bracket-Support, Hood
16	117-1806	1	Decal-Service
17	114-8715-03	1	Bracket-Fan, Back
18	114-8711-03	1	Shroud-Fan
19	114-8712-03	1	Shroud-Fan, Front
20	114-8714-03	1	Bracket-Fan, Back
21	104-2809	1	Fan
22	117-1725-03	1	Latch-Rod
23	1-523420	2	Bumper
24	106-9308	2	Spacer
25	3290-301	2	Washer-Spring
26	3256-22	2	Washer-Flat

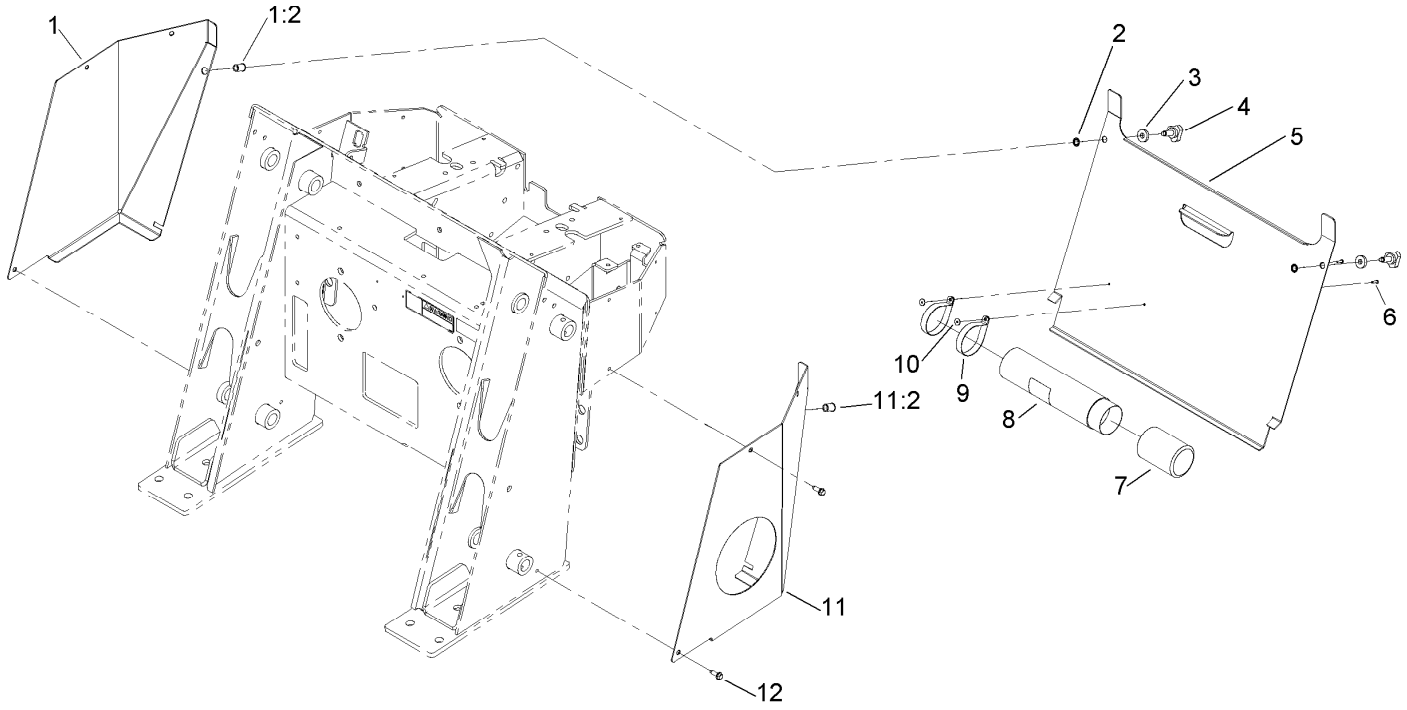

Rear Access Cover Assembly

Ref.	*Part Number*	*Qty.*	*Description*
1	106-9342	1	RH Rear Cover Support ASM
1:2	32148-9	1	Nut-Clinch
2	32151-72	2	Ring-Retaining
3	106-0565	2	Washer-Rubber
4	95-9648	2	Knob
5	106-9339-01	1	Cover-Access, Rear
6	3269-17	2	Rivet-Pop
7	104-7048	1	Cap-Housing
8	104-7050	1	Tube-Manual
9	2412-120	2	Clamp-R
10	3269-10	2	Washer-Back
11	106-9343	1	LH Rear Cover Support ASM
11:2	32148-9	1	Nut-Clinch
12	9266714	6	Screw-HWH

Attachments and Accessories

For 22322 TX 427 Wide Track Compact Utility Loader

Product Name	Model/Part
Light Kit	100-8840
Road Wheel Kit	106-7620
Reference Guide Kit	107-9310
Track-Aggressive Tread, Wide	108-9749
4 Cubic Foot Standard Bucket	22409
Loose Materials Bucket	22410
48in Hydraulic Blade	22414
Rotary Broom	22415
Bore Drive Head	22420
Rod and Reamer	22421
Multi-Purpose Tool	22423
Power Box Rake	22425
Stump Grinder	22429
Tree Forks	22438
Cement Bowl	22442
40in Tiller	22445
Snowthrower	22456
Crumber Kit	22464
Trencher Head	22470
High-Speed Trencher Head	22471
Trench Filler	22472
TX Platform	22475
Narrow Bucket	22520
Grapple Rake	22521
Auger Head	22805
Universal Swivel Auger Head	22806
Vibratory Plow	22911
Soil Cultivator	23101
Concrete Breaker	23135
Backhoe Fitup Kit	23162
Backhoe	23163
Adjustable Forks	23164
Leveler	23165
Spark Arrestor Screen	75-6880

Notes:

Notes:

Notes:

TORO®

Count on it.