Form No. 3328–881

TORO®

5, 8 and 11 Blade Cutting Unit

Reelmaster® 2000/3000 Series

Model No. 03210—230000001 and Up
Model No. 03212—230000001 and Up
Model No. 03237—230000001 and Up
Model No. 03238—230000001 and Up
Model No. 03239—230000001 and Up

PROTOTYPE

Operator's Manual

CE

English (EN, GB)

Contents

	Page
Introduction	2
Safety	3
Safety and Instruction Decals	3
Specifications	3
General Specifications	3
Optional Equipment	4
Set–Up	4
Loose Parts	4
Mounting the Front Roller	5
Adjusting Front Shield	5
Adjusting Bedknife Parallel to Reel	5
Setting Height of Cut and Leveling Rear Roller	6
Verifying the Height-of-Cut Setting and Leveling the Front Roller	7
Verifying Bedknife to Reel Adjustment	7
Changing Height-of-Cut	8
Reposition Front Roller	8
Reposition Rear Roller	8
Cutting Unit Attitude	8
Checking/Adjusting Cutting Unit Attitude	9
Operation	10
Cutting Unit Characteristics	10
Cutting Unit Daily Adjustments	10
Lubrication	10
Backlapping	11
SPA Spring Adjustment	11
The Toro General Commercial Products Warranty	12

Introduction

Read this manual carefully to learn how to operate and maintain your product properly. The information in this manual can help you and others avoid injury and product damage. Although Toro designs and produces safe products, you are responsible for operating the product properly and safely.

Whenever you need service, genuine Toro parts, or additional information, contact an Authorized Service Dealer or Toro Customer Service and have the model and serial numbers of your product ready. The model and serial numbers are stamped onto a plate on cutting unit.

Write the product model and serial numbers in the space below:

Model No. _____

Serial No. _____

This manual identifies potential hazards and has special safety messages that help you and others avoid personal injury and even death. ***Danger***, ***Warning***, and ***Caution*** are signal words used to identify the level of hazard. However, regardless of the hazard, be extremely careful.

Danger signals an extreme hazard that *will* cause serious injury or death if you do not follow the recommended precautions.

Warning signals a hazard that *may* cause serious injury or death if you do not follow the recommended precautions.

Caution signals a hazard that may cause minor or moderate injury if you do not follow the recommended precautions.

This manual uses two other words to highlight information. **Important** calls attention to special mechanical information and **Note:** emphasizes general information worthy of special attention.

PROTOTYPE

© 2002 by The Toro Company
8111 Lyndale Avenue South
Bloomington, MN 55420-1196

All Rights Reserved
Printed in the USA

Safety

Safety and Instruction Decals

Safety decals and instructions are easily visible to the operator and are located near any area of potential danger. Replace any decal that is damaged or lost.

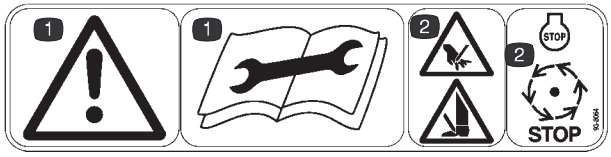

Part No. 93-6688 (for CE)

1. Danger—read and understand the operator's manual before performing any maintenance.
2. Cutting hazard of hands or feet—stop the engine before approaching reel area.



Part No. 67-7960

Specifications

General Specifications

Height-of-cut	3/8 to 1-3/4 in. (10mm to 44mm) 1/2 to 2-5/8 in. with fixed cutting unit (13mm to 67mm)
Frequency of clip (with variable speed set to maximum RPM)	5 blade at 1040 reel RPM at 5 MPH=1 in. clip (8 km/h = 25mm clip) 5 blade at 1040 reel RPM at 6 MPH=1.2 in. clip (9.7 km/h = 30.5mm clip) 8 blade at 1040 reel RPM at 5 MPH=.63 in. clip (8 km/h = 16mm clip) 8 blade at 1040 reel RPM at 6 MPH=.76 in. clip (9.7 km/h = 19mm clip) 11 blade at 1040 reel RPM at 5 MPH=.46 in. clip (8 km/h = 12mm clip) 11 blade at 1040 reel RPM at 6 MPH=.55 in. clip (9.7 km/h = 14mm clip)
Bedknife to reel adjustment	Single knob screw adjustment for bedknife to reel, located at center of bedbar. Each notch on the knob will move the bedknife .0005 inches (.013mm).
Suspension system	Fully floating with hydraulic counterbalance. L-I-N-K-S™ cutting unit suspension system provides fore and aft oscillation. Main center pivot allows side-to-side oscillation. With optional Fixed Kit, Part No. 93-6915, cutting units can be locked into fixed (fore/aft) position for use with skids or anti-scalp rollers.

PROTOTYPE

Specifications and design subject to change without notice.

Optional Equipment

Basket Kit* (27 in.)	Model No. 03227
High Height of Cut (Extension) Kit* (27 in. & 32 in.)	Part No. 104-1395
3” Wiehle Roller Kit* (27 in.)	Model No. 03233
3” Wiehle Roller Kit* (32 in.)	Model No. 03234
Full Roller Kit* (27 in.)	Model No. 03440
Full Roller Kit* (32 in.)	Model No. 03479
Sectional Roller (27 in.)	Part No. 62–4970
Sectional Roller (32 in.)	Part No. 94–5982
Anti-Scalp Roller (27 in.)	Part No. 63–5090
Anti-Scalp Roller (32 in.)	Part No. 94–5981
3” Wiehle Roller Scraper Kit* (27 in.)	Part No. 104–1398
3” Wiehle Roller Scraper Kit* (32 in.)	Part No. 104–1399
Full Roller Scraper Kit* (27 in.)	Part No. 60-9560
Full Roller Scraper Kit* (32 in.)	Model No. 03478
Comb Kit*	Part No. 67-9400
Fixed Kit*	Part No. 93-6915
Skid Kit*	Part No. 94-3664
Heavy Duty Bedknife** (27 in.)	Part No. 104–1380
Heavy Duty Bedknife** (32 in.)	Part No. 104–1381
Backlapping Brush Assembly	Part No. 29-9100
Gauge Bar Assembly	Part No. 98–1852
Angle Indicator	Part No. 99–3503
Bedknife Screw Tool	Part No. 51-0880

* 3 per kit

** For 1/2” height of cut or above

PROTOTYPE

Set–Up

Note: Determine the left and right sides of the machine from the normal operating position.

Loose Parts

Note: Use this chart as a checklist to ensure that all parts have been received. Without these parts, total setup cannot be completed.

Description	Qty.	Use
Gasket Screw Cover plate	1 2 1	For use with RM 2300 & RM 2600 cutting units only.
O–ring	1	For use with reel motor bearing housing
CE Decal	1	Affix to cutting unit for CE.
Operator's manual	1	Read before operating.
Parts catalog	1	
Registration card	1	Fill out and return to Toro.

After the cutting unit is unboxed, use the following procedures to ensure the cutting units are adjusted properly.

1. Check each end of the reel for grease. Grease should be visibly evident in the reel bearings.
2. Ensure that all nuts and bolts are securely fastened.
3. Mount front roller.
4. Adjust bedknife to reel.
5. Set height-of-cut and level rear roller.
6. Verify height-of-cut and level front roller.
7. Verify reel to bedknife clearance.

Important Thoroughly read both Cutting Unit and Traction Unit Operator Manuals. Failure to do so may result in damage to the cutting unit and/or poor performance.

PROTOTYPE

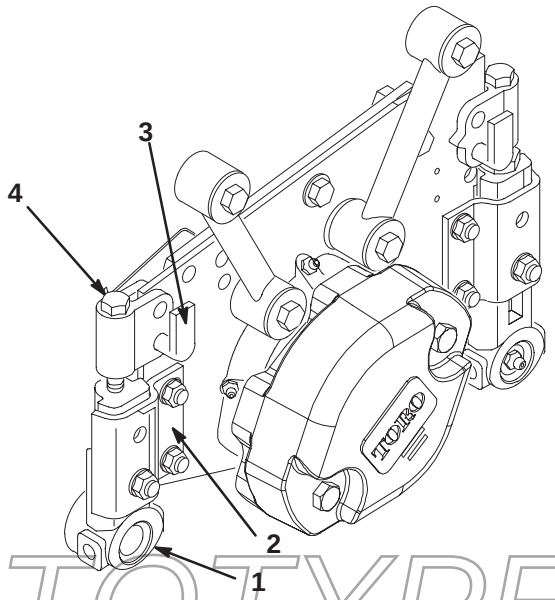

Figure 1

1. Roller bracket
2. Angle bracket
3. Height-of-cut pin
4. Support capscrew

Mounting the Front Roller

(Models 03210 & 03212 only)

1. Remove 2 locknuts securing each angle bracket to cutting unit (Fig. 1).
2. Remove height-of-cut pins (Fig. 1).
3. Insert smaller diameter shaft end of roller into white bushing in roller bracket (Fig. 1), making sure flanged end of nylon bushing faces inside toward roller. **Hex of roller bracket must mate with hex of adjustment nut.**
4. Install roller bracket onto other shaft end of roller. **Hex of roller bracket must mate with hex of adjustment nut.**

5. Hold one roller bracket stationary and use other bracket as a wrench to loosen or tighten bearing clearance to allow roller to rotate freely and to eliminate bearing end play.

Important If end play is excessive, seal failure may occur resulting in reduced bearing life.

6. Roller brackets must be aligned for installation onto cutting unit. lf necessary to align after bearing adjustment, remove roller bracket on side with flanged nylon bushing, align with opposite roller bracket within ± one hex flat and replace.

7. Install height-of-cut pins in the 1/4 in. setting. This will get the roller out of the way for later adjustments

8. Reinstall 2 locknuts securing each angle bracket to cutting unit.

Adjusting Front Shield

The front shield is shipped from the factory raised at approximately a 15 degree angle. The shield can be adjusted for desired grass clippings dispersion.

1. Position cutting unit on a flat level surface.

2. Loosen pivot screw securing shield to side plate. Move shield to desired angle and tighten screw (Fig. 2).

Note: To secure shield in down position, use mounting screws threaded into cross tube.

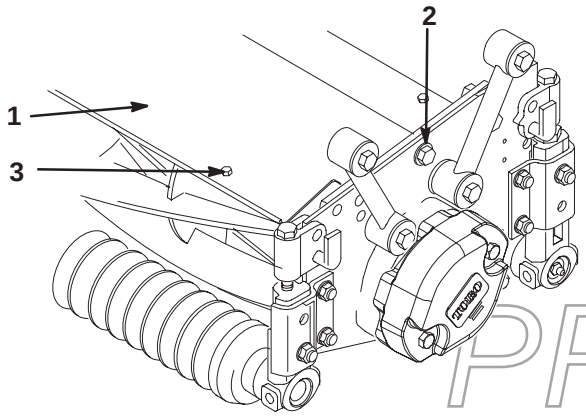

Figure 2

1. Shield
2. Pivot screw
3. Mounting screw

Adjusting Bedknife Parallel to Reel

1. A 3/4 in. (19 mm) wrench will be needed to rotate bedknife adjustment knob. Each notch on the knob will move the bedknife .0005 inches (.013mm) (Fig. 3). Make sure reel contact is removed by rotating bedknife adjustment knob counterclockwise.

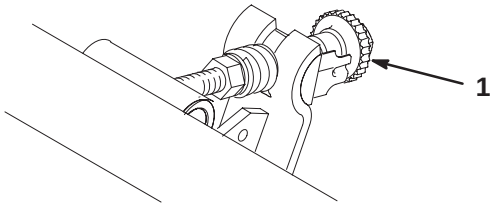

Figure 3

1. Bedknife adjusting knob

2. Set the cutting unit as shown in Figure 4. Do not rest the cutting unit on the bedknife adjusting knob as this will affect the reel to bedknife clearance. Place a block of wood under the round cross tube to hold the adjustment knob above the surface.

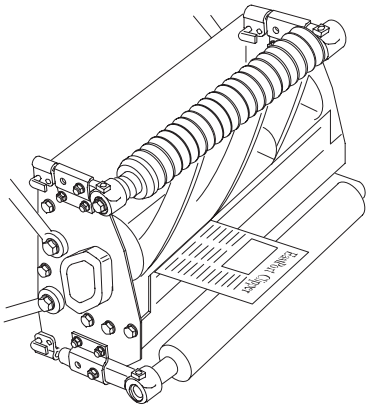

Figure 4

PROTOTYPE

3. Rotate the reel, by hand, while tightening the bedknife adjustment knob. Stop when light contact is felt.

4. Insert a long strip of dry newspaper between the reel and bedknife (Fig. 4) at either end of the bedknife, and rotate the reel by hand. The paper should be cleanly cut. Repeat this procedure at other end of the reel. If the paper does not cut cleanly, tighten the bedknife adjusting knob a maximum of two clicks and check to see if paper is cut cleanly. If it is not, proceed to the next step.

5. Remove counter weights from ends of cutting units.

6. Loosen the two locknuts securing the bedbar adjuster to the cutting unit side plate (Fig. 5).

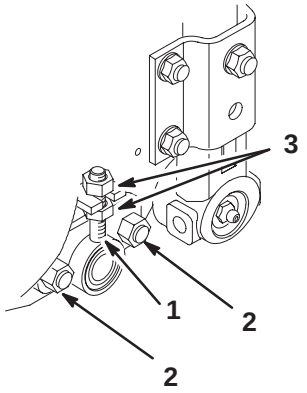

Figure 5

1. Bedbar adjuster
2. Locknuts
3. Adjustment nuts

7. Adjust nuts to move bedbar adjuster up or down until paper is cut along entire bedknife surface, when bedknife adjustment knob is adjusted to no more than two clicks beyond first contact of reel bedknife (Fig. 5).

8. Tighten locknuts to 200 in.-lb. and verify adjustment.

9. On Reelmaster 3100 D cutting units, install counter weights to appropriate ends of cutting units (left side of center and front left cutting units and right side of front right cutting unit).

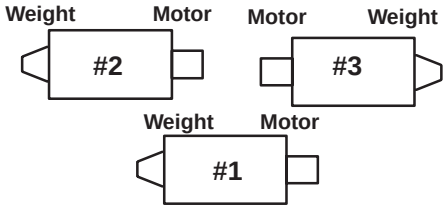

Figure 6

10. On Reelmaster 2300/2600 cutting units, install covers to appropriate ends of cutting units (covers mounted to left side of center and front left cutting units and right side of front right cutting unit).

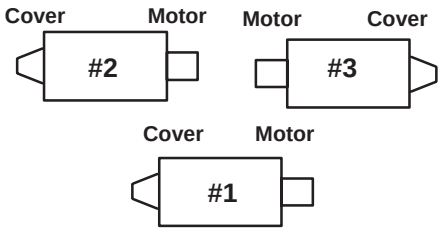

Figure 7

Setting Height of Cut and Leveling Rear Roller

1. Position cutting unit on a surface plate.

2. Adjust support capscrew to achieve 1 in. ± 1/16 (25mm ± 1.5mm) dimension between height-of-cut support and front roller bracket (2 places) (Fig. 8).

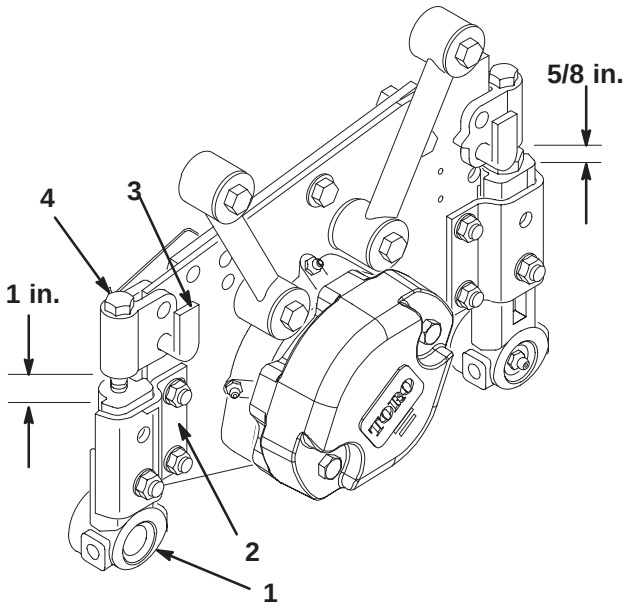

Figure 8

1. Roller bracket
2. Angle bracket
3. Height-of-cut pin
4. Support capscrew

3. Adjust support capscrew to achieve 5/8 in. ± 1/16 (16mm ± 1.5mm) dimension between height-of-cut support and rear roller bracket (2 places) (Fig. 8).

4. Remove hairpin cotters securing rear height-of-cut pins and reinstall in the desired setting, as indicated on height-of-cut plate. Front height-of-cut pins should remain at 1/4 in. (6mm) setting.

5. Position a straight, parallel sided bar under the reel blades and against the front face of the bedknife. For 1 in. (25mm) height-of-cut or below, a 3/4 in. (19mm) thick bar is recommended. For height-of-cuts above 1 in. (25mm), a 1-1/4 in. (32mm) thick bar is recommended.

Note: The bar thickness does not affect adjustment. The recommended bars keep the cutting unit more balanced during adjustment. Make sure the bar covers the full length of the reel blades and the outermost contact points between the reel and bar are equal distances from the center of the reel.

6. Verify if rear roller is level by trying to insert a piece of paper under each end of roller. The paper should not fit under the roller.

PROTOTYPE

7. Level roller by adjusting appropriate support capscrew on rear roller supports until roller is parallel and entire length of roller contacts table.

8. Tighten nuts securing rear roller brackets to angle brackets. Recheck to ensure that paper will not fit under each end of roller.

Verifying the Height-of-Cut Setting and Leveling the Front Roller

1. On gauge bar, set head of screw to desired height-of-cut. This measurement is from bar face to underside of screw head. Gauge Bar (Part No. 98–1852) may be obtained from your local Toro Distributor.

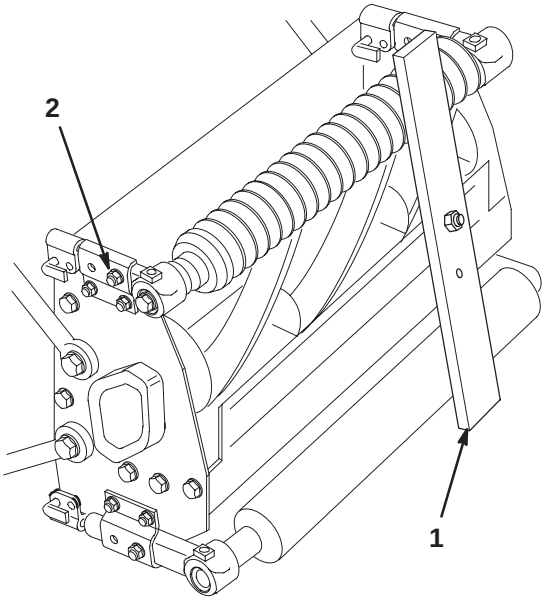

Figure 9

1. Gauge bar
2. Front roller bracket nut

2. Slightly loosen nut securing each front roller bracket to angle bracket (Fig. 9).

3. Remove hairpin cotters securing front height-of-cut pins and reinstall in the desired setting as indicated on the front height-of-cut plate.

4. Place the bar across the front and rear rollers and adjust the front roller support screws until the underside of screw head engages the bedknife cutting edge (Fig. 9). Do this on both ends of reel. Make sure the rollers are free of debris and/or distortions on the roller surfaces.

5. Tighten nuts securing roller brackets.

6. Place cutting unit on a flat surface and verify that front and rear rollers contact the surface. Alternately push downward on opposite corners of the cutting unit. The amount of clearance allowable under any roller end depends on the turf conditions (sensitivity to lack of parallelism). Generally, .010 to .020 in. (.25 to .50mm) will provide acceptable after cut appearance. If clearance under any roller end is excessive, repeat the leveling of front and rear rollers.

Verifying Bedknife to Reel Adjustment

With the reels mounted to the traction unit, verify that the cutting unit will cut one thickness of newspaper across its entire width (paper to be perpendicular to bedknife) (Fig. 10).

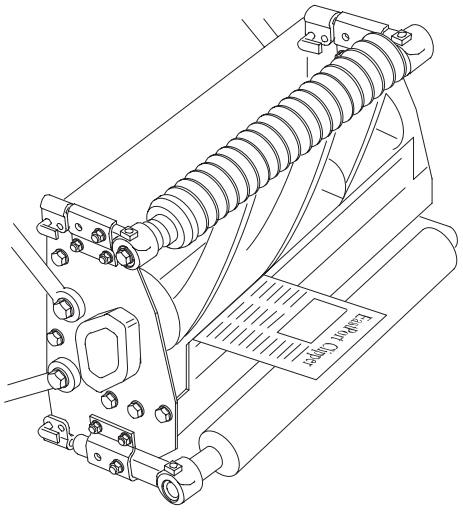

Figure 10

PROTOTYPE

Changing Height-of-Cut

This procedure describes how to change the height-of-cut after a cutting unit has been set up as described in Setup, page 4. The height-of-cut can be changed with the cutting units on or off the traction unit.

Reposition Front Roller

Note: If front roller position does not need to change, as indicated on height-of-cut plates, proceed to Reposition Rear Roller, page 9.

1. Loosen nut securing each front roller bracket to front angle brackets.
2. Remove hairpin cotters securing front height–of–cut pins and reinstall in the desired setting as indicated on the height-of-cut plate.
3. Tighten nut securing **one** front roller bracket to angle bracket. On this same end of the cutting unit, place the gauge bar across the front and rear rollers and adjust the screw on the gauge bar until the underside of the screw engages the bedknife cutting edge.
4. Move the gauge bar to the other end of the reel and adjust the roller support screw, on the reel, until the underside of the screw head, on the gauge bar, engages the bedknife cutting edge.
5. Tighten nut securing this front roller bracket to angle bracket.

Reposition Rear Roller

1. On gauge bar, set head of screw to desired height-of-cut. This measurement is from bar face to underside of screw head. Gauge Bar (Part No. 98–1852) may be obtained from your local Toro Distributor.
2. Slightly loosen nut securing each rear roller bracket to angle brackets.
3. Remove hairpin cotters securing rear height–of–cut pins and reinstall in the desired setting as indicated on the height-of-cut plate.
4. Place the bar across the front and rear rollers and adjust the rear roller support screws until the underside of screw head engages the bedknife cutting edge. Do this on both ends of reel.
5. Tighten nuts securing roller brackets.
6. Repeat this procedure on remaining cutting units.

PROTOTYPE

Cutting Unit Attitude

Cutting unit attitude refers to the position of the cutting edge of the bedknife behind the center line of the reel (bottom–dead–center) (Fig. 11). This can be varied by changing the position of the front and rear rollers at a given height-of-cut.

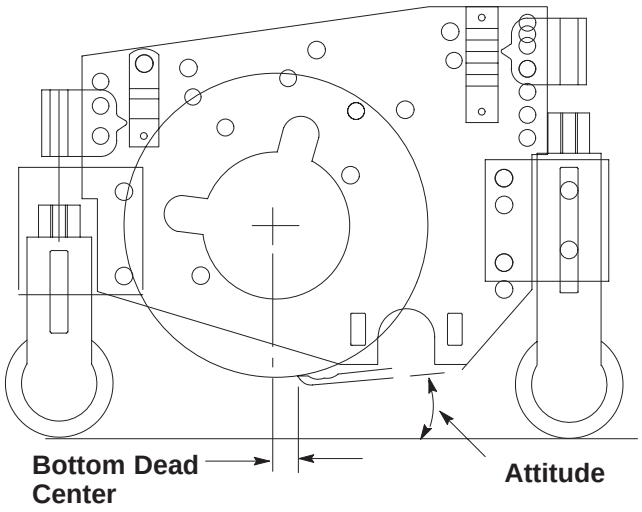

Figure 11

The farther the cutting edge is behind the reel center line, the more aggressive the cutting unit will cut. Conversely, moving the cutting edge forward makes the cutting unit cut less aggressively.

The previous procedures used nominal cutting unit attitudes which work well in most turf conditions. The table below shows the relationship between cutting unit attitude and turf conditions for improved after cut appearance. **It is important that all cutting units, on a machine, have the same attitude.**

Turf Condition	Cutting Unit Attitude	
	More Aggressive	Less Aggressive
Cool season grass	X	
Warm season grass		X
Deep leaf canopy	X	
Shallow leaf canopy		X
Higher height-of-cut	X	
Lower height-of-cut		X

Checking/Adjusting the Cutting Unit Attitude

For setting consistent cutting unit attitude, Toro strongly recommends using a two-screw gauge bar, Toro part no. 98-1852 (Fig. 12). The first screw is set for height-of-cut, and the second screw is set for cutting unit attitude. The second screw setting is an easy method of transferring cutting unit attitude to all cutting units on a machine.

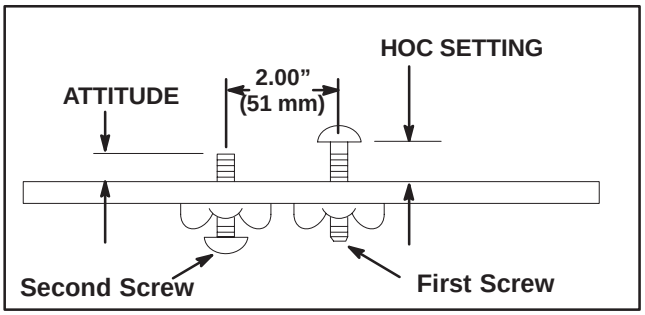

Figure 12

1. Place an angle indicator, Toro Part No. 99-3503, on the bedknife and record the bedknife angle (Fig. 13).

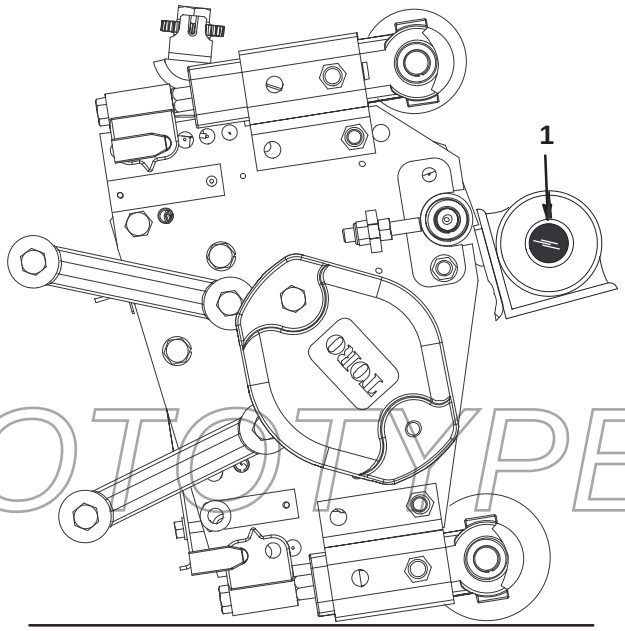

Figure 13

1. Bedknife angle

2. Using a two-screw gauge bar, Toro Part No. 98-1852, set the first screw to the desired height-of-cut.

PROTOTYPE

3. Place the gauge bar across the front and rear rollers. The first screw head needs to fit snugly over the edge of the bedknife while the gauge bar contacts the rollers (Fig. 14).

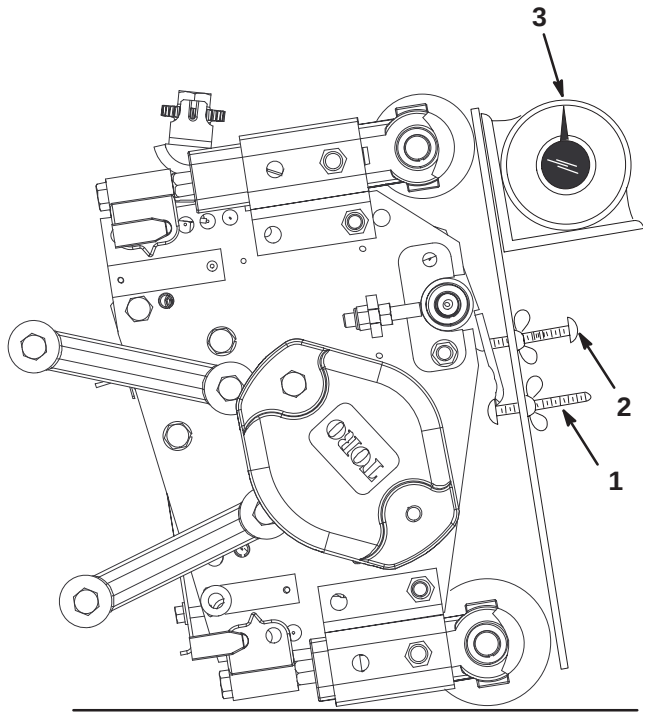

Figure 14

1. First screw
2. Second screw
3. Gauge bar angle

4. Adjust the second screw to contact the bedknife.

5. Place an angle indicator on the gauge bar and record the gauge bar angle (Fig. 14).

6. Bedknife Angle (step 1) – Gauge Bar Angle (step 5) = Cutting Unit Attitude (degrees)

7. For adjusting the cutting unit attitude, adjust the rollers to achieve desired cutting unit attitude.

Important Make sure rollers are parallel to reel, repeat leveling procedure, if necessary.

Note: If rollers are parallel to reel before changing bedknife attitude, you can change one roller at a time and still maintain parallelism.

PROTOTYPE

Operation

Note: Determine the left and right sides of the machine from the normal operating position.

Cutting Unit Characteristics

The single knob bedknife-to-reel adjustment system incorporated in this cutting unit simplifies the adjustment procedure needed to deliver optimum mowing performance. The precise adjustment possible with the single knob/bedbar design gives the necessary control to provide a continual self-sharpening action—thus maintaining sharp cutting edges, assuring good quality-of-cut, and greatly reducing the need for routine backlapping.

In addition, the rear roller positioning system permits optimum bedknife attitude and location for varying height-of-cuts and turf conditions.

Cutting Unit Daily Adjustments

Prior to mowing each day, or as required, each cutting unit must be checked to verify proper bedknife–to–reel contact. **This must be performed even though quality of cut is acceptable.**

1. Lower cutting units onto a hard surface, shut off engine and remove key from ignition.
2. Slowly rotate reel in reverse direction listening for reel-to-bedknife contact. If no contact is evident, turn bedknife adjusting knob clockwise, one click at a time, until light contact is felt and heard.
3. If excessive contact is felt, turn bedknife adjusting knob counterclockwise, one click at a time until no contact is evident. Then turn bedknife adjusting knob one click at a time clockwise, until light contact is felt and heard.

Important Light contact is preferred at all times. If light contact is not maintained, bedknife/reel edges will not sufficiently self-sharpen and dull cutting edges will result after a period of operation. If excessive contact is maintained, bedknife/reel wear will be accelerated, uneven wear can result, and quality of cut may be adversely affected.

Note: As the reel blades continue to run against the bedknife a slight burr will appear on the front cutting edge surface the full length of the bedknife. If a file is occasionally run across the front edge to remove this burr, improved cutting can be obtained.

After extended running, a ridge will eventually develop at both ends of the bedknife. These notches must be rounded off or filed flush with cutting edge of bedknife to ensure smooth operation.

PROTOTYPE

Lubrication

Each cutting unit has 6 grease fittings (with optional front roller installed) that must be lubricated regularly with No. 2 General Purpose Lithium Base Grease.

The grease fitting locations and quantities are: Bedknife adjuster (2), every 50 hours (Fig. 15); Reel bearings (2) and front and rear rollers (2 ea.) (Fig. 16).

Note: Lubricate only one reel bearing grease fitting on each end of cutting unit.

Important Lubricating cutting units immediately after washing helps purge water out of bearings and increases bearing life.

1. Wipe each grease fitting with a clean rag.

2. Apply grease until pressure is felt against handle.

Important Do not apply too much pressure or grease seals will be permanently damaged.

3. Wipe excess grease away.

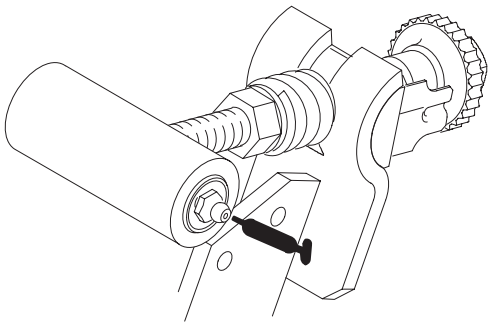

Figure 15

Grease every 50 hours

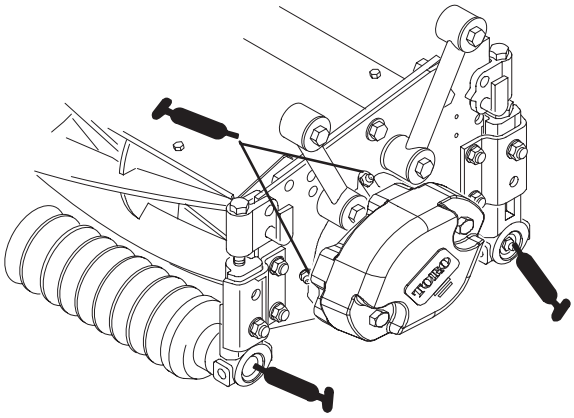

Figure 16

Grease every 8 hours

PROTOTYPE

Backlapping

Danger

While backlapping, reels may stall and then not restart.

Contact with the reel blades can cause personal injury or death.

- **Never place hands or feet in reel area while engine is running.**
- **Do not attempt to restart reels by hand or foot.**
- **Do not adjust reels while engine is running.**
- **If reel stalls, stop engine before attempting to clear reel.**

1. Position machine on a clean, level surface, lower the cutting units, stop the engine, engage parking brake and remove key from ignition switch.
2. Rotate backlap knob, to backlap position. Rotate reel speed knob to position 1.
3. Make initial reel to bedknife adjustments appropriate for backlapping on all cutting units. Start engine and set engine to low idle speed.
4. Engage reels.
5. Apply lapping compound with long handled brush.
6. To make an adjustment to the cutting units while backlapping, turn reels and engine OFF. After adjustments have been completed, repeat steps 4–6.
7. When backlap operation is completed, rotate backlap knob to MOW position, set reel speed control to desired mowing setting and wash all lapping compound off cutting units.

Note: Additional instructions and procedures on Backlapping are available in the Toro Sharpening Reel & Rotary Mowers Manual, Form No. 80-300SL.

Note: For a better cutting edge, run a file across the front face of the bedknife when the lapping operation is completed. This will remove any burrs or rough edges that may have built up on the cutting edge.

SPA (Single Point Adjustment) Spring Adjustment

If single point adjustment assembly (Fig. 17) is removed for servicing, make sure spring is compressed, between washers, to a length of .86” (22 mm). This adjustment is attained by tightening nut on SPA knob shaft.

Note: SPA assembly has left-handed threads.

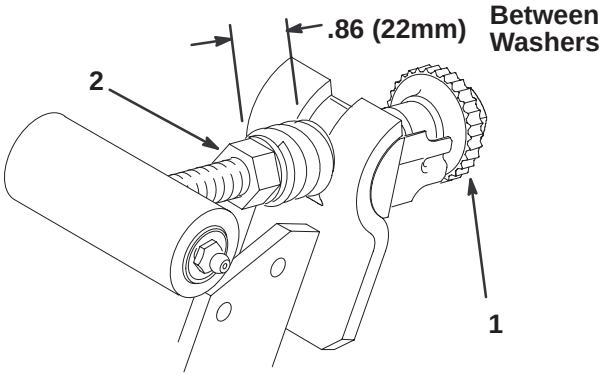

Figure 17

1. Single point adjust assembly
2. Adjusting nut

PROTOTYPE

PROTOTYPE

The Toro General Commercial Products Warranty

A Two-Year Limited Warranty

Conditions and Products Covered

The Toro Company and its affiliate, Toro Warranty Company, pursuant to an agreement between them, jointly warrant your 1996 or newer Toro Commercial Product ("Product") purchased after January 1, 1997, to be free from defects in materials or workmanship for two years or 1500 operational hours*, whichever occurs first. Where a warrantable condition exists, we will repair the Product at no cost to you including diagnosis, labor, parts, and transportation. This warranty begins on the date the Product is delivered to the original retail purchaser.

* Product equipped with hour meter

Instructions for Obtaining Warranty Service

You are responsible for notifying the Commercial Products Distributor or Authorized Commercial Products Dealer from whom you purchased the Product as soon as you believe a warrantable condition exists.

If you need help locating a Commercial Products Distributor or Authorized Dealer, or if you have questions regarding your warranty rights or responsibilities, you may contact us at:

Toro Commercial Products Service Department
Toro Warranty Company
8111 Lyndale Avenue South
Bloomington, MN 55420-1196
952-888-8801 or 800-982-2740
E-mail: commercial.service@toro.com

Owner Responsibilities

As the Product owner, you are responsible for required maintenance and adjustments stated in your operator's manual. Failure to perform required maintenance and adjustments can be grounds for disallowing a warranty claim.

Items and Conditions Not Covered

Not all product failures or malfunctions that occur during the warranty period are defects in materials or workmanship. This express warranty does not cover the following:

- Product failures which result from the use of non-Toro replacement parts, or from installation and use of add-on, modified, or unapproved accessories
- Product failures which result from failure to perform required maintenance and/or adjustments
- Product failures which result from operating the Product in an abusive, negligent or reckless manner
- Parts subject to consumption through use unless found to be defective. Examples of parts which are consumed, or used up, during normal Product operation include, but are not limited to, blades, reels, bedknives, tines, spark plugs, castor wheels, tires, filters, belts, etc.
- Failures caused by outside influence. Items considered to be outside influence include, but are not limited to, weather, storage practices, contamination, use of unapproved coolants, lubricants, additives, or chemicals, etc.
- Normal "wear and tear" items. Normal "wear and tear" includes, but is not limited to, damage to seats due to wear or abrasion, worn painted surfaces, scratched decals or windows, etc.

Parts

Parts scheduled for replacement as required maintenance are warranted for the period of time up to the scheduled replacement time for that part.

Parts replaced under this warranty become the property of Toro. Toro will make the final decision whether to repair any existing part or assembly or replace it. Toro may use factory remanufactured parts rather than new parts for some warranty repairs.

General Conditions

Repair by an Authorized Toro Distributor or Dealer is your sole remedy under this warranty.

Neither The Toro Company nor Toro Warranty Company is liable for indirect, incidental or consequential damages in connection with the use of the Toro Products covered by this warranty, including any cost or expense of providing substitute equipment or service during reasonable periods of malfunction or non-use pending completion of repairs under this warranty. Except for the Emissions warranty referenced below, if applicable, there is no other express warranty. All implied warranties of merchantability and fitness for use are limited to the duration of this express warranty.

Some states do not allow exclusions of incidental or consequential damages, or limitations on how long an implied warranty lasts, so the above exclusions and limitations may not apply to you.

This warranty gives you specific legal rights, and you may also have other rights which vary from state to state.

Note regarding engine warranty: The Emissions Control System on your Product may be covered by a separate warranty meeting requirements established by the U.S. Environmental Protection Agency (EPA) and/or the California Air Resources Board (CARB). The hour limitations set forth above do not apply to the Emissions Control System Warranty. Refer to the Engine Emission Control Warranty Statement printed in your operator's manual or contained in the engine manufacturer's documentation for details.

PROTOTYPE

Countries Other than the United States or Canada

Customers who have purchased Toro products exported from the United States or Canada should contact their Toro Distributor (Dealer) to obtain guarantee policies for your country, province, or state. If for any reason you are dissatisfied with your Distributor's service or have difficulty obtaining guarantee information, contact the Toro importer. If all other remedies fail, you may contact us at Toro Warranty Company.

Part No. 374-0031 Rev. –