Form No. 3467-253 Rev A

TORO®

Count on it.

Operator's Manual

Grandstand® 32in or 36in HDM

Model No. 74532—Serial No. 400000000 and Up
Model No. 74535—Serial No. 400000000 and Up

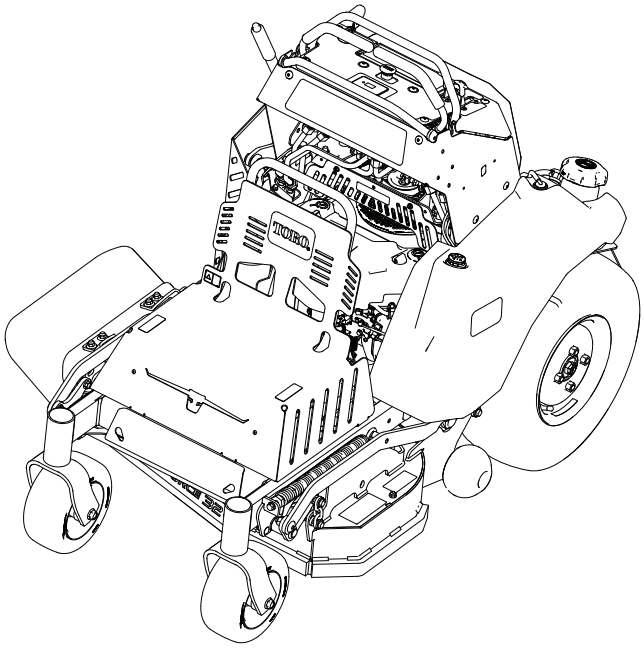

Register at www.Toro.com.
Original Instructions (EN)

3467-253

It is a violation of California Public Resource Code Section 4442 or 4443 to use or operate the engine on any forest-covered, brush-covered, or grass-covered land unless the engine is equipped with a spark arrester, as defined in Section 4442, maintained in effective working order or the engine is constructed, equipped, and maintained for the prevention of fire.

The enclosed engine owner's manual is supplied for information regarding the US Environmental Protection Agency (EPA) and the California Emission Control Regulation of emission systems, maintenance, and warranty. Replacements may be ordered through the engine manufacturer.

Please refer to the engine manufacturer's information included with the machine.

⚠ WARNING

CALIFORNIA
Proposition 65 Warning

The engine exhaust from this product contains chemicals known to the State of California to cause cancer, birth defects, or other reproductive harm.

Battery posts, terminals, and related accessories contain lead and lead compounds, chemicals known to the State of California to cause cancer and reproductive harm. Wash hands after handling.

Use of this product may cause exposure to chemicals known to the State of California to cause cancer, birth defects, or other reproductive harm.

Introduction

This rotary-blade, stand-on lawn mower is intended to be used by professional, hired operators. It is designed primarily for cutting grass on well-maintained lawns on residential or commercial properties. Using this product for purposes other than its intended use could prove dangerous to you and bystanders.

Read this information carefully to learn how to operate and maintain your product properly and to avoid injury and product damage. You are responsible for operating the product properly and safely.

Visit www.Toro.com for more information, including safety tips, training materials, accessory information, help finding a dealer, or to register your product.

Whenever you need service, genuine Toro parts, or additional information, contact an Authorized Service Dealer or Toro Customer Service and have the model and serial numbers of your product ready. identifies the location of the model and serial numbers on the product. Write the numbers in the space provided.

Important: **With your mobile device, you can scan the QR code on the serial number decal (if equipped) to access warranty, parts, and other product information.**

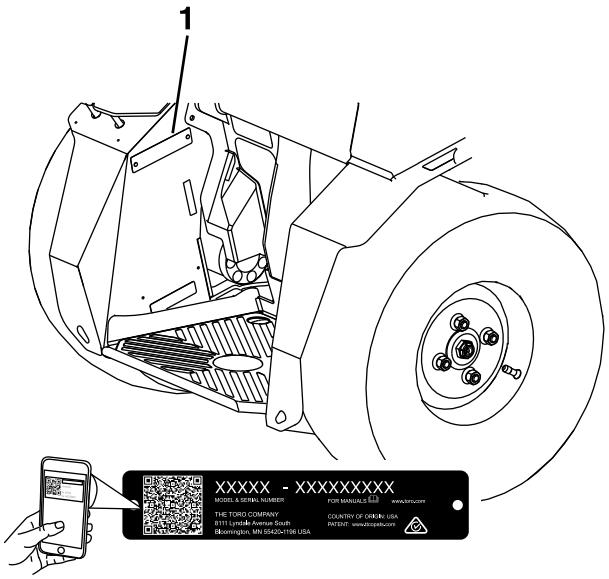

g464398

Figure 1

1. Location of the model and serial numbers

Model No. _____

Serial No. _____

This manual identifies potential hazards and has safety messages identified by the safety-alert symbol (Figure 2), which signals a hazard that may cause serious injury or death if you do not follow the recommended precautions.



g000502

Figure 2

1. Safety-alert symbol

This manual uses 2 words to highlight information. **Important** calls attention to special mechanical information and **Note** emphasizes general information worthy of special attention.

© 2024—The Toro® Company
8111 Lyndale Avenue South
Bloomington, MN 55420

Contact us at www.Toro.com.
Printed in the USA
All Rights Reserved

Contents

Safety 4
Safety-Alert Symbol 4
General Safety 4
Safety and Instructional Decals 5
Product Overview 10
Controls 10
Specifications 12
Attachments/Accessories 12
Before Operation 13
Before Operation Safety 13
Adding Fuel 13
Before Operations Checks 14
Breaking in a New Machine 16
During Operation 16
During Operation Safety 16
Opening the Fuel Shut-Off Valve 18
Operating the Engine 18
Operating the PTO Switch 18
Driving the Machine 19
Adjusting the Front Reference Bar 20
Adjusting the Cutting Height 20
Adjusting the Operator Platform 20
Adjusting the Anti-Scalp Rollers 21
After Operation 22
After Operation Safety 22
Transporting the Machine 22
Maintenance 24
Maintenance Safety 24
Recommended Maintenance Schedule(s) 24
Pre-Maintenance Procedures 25
Lift the Thigh Pad for Rear Access 25
Removing the Rear Guard 25
Installing the Rear Guard 25
Lubrication 26
Lubricating the Grease Fittings 26
Engine Maintenance 26
Engine Safety 26
Servicing the Air Cleaner 26
Changing the Engine Oil 27
Checking the Engine-Oil Level 27
Checking the Spark Plugs 27
Checking the Spark Arrester (if equipped) 28
Fuel System Maintenance 28
Changing the Fuel Filter 28
Electrical System Maintenance 29
Electrical System Safety 29
Checking the Battery Charge 29
Recommended Jump Starting Procedure 30
Drive System Maintenance 31
Checking the Tire Pressures 31
Wheel Hub Nut Torque Specification 31
Brake Maintenance 32
Adjusting the Parking Brake 32
Belt Maintenance 33
Checking the Belts 33
Pump Drive Belt Tension 33
Mower Deck Drive Belt Tension 33
Controls System Maintenance 33
Adjusting the Motion-Control Handle Position 33
Adjusting Motion-Control Tracking 34
Hydraulic System Maintenance 35
Hydraulic System Safety 35
Hydraulic System Specifications 35
Checking the Hydraulic Oil Level 35
Replacing the Hydraulic Fluid and Filters 35
Hydraulic System Air Purge 36
Mower Deck Maintenance 38
Blade Safety 38
Checking the Mower Blades 38
Leveling the Mower Deck 38
Maintaining the Chassis 41
Checking for Loose Hardware 41
Cleaning 41
Cleaning and Storing Safety 41
Clean Debris From Machine 41
Clean Engine and Exhaust System Area 41
Remove Engine Shroud Access Panels and Clean Cooling Fins 42
Clean Grass Build-Up Under Deck 42
Waste Disposal 42
Troubleshooting 43
Schematics 46

Safety

Safety-Alert Symbol

The safety-alert symbol (Figure 3) shown in this manual and on the machine identifies important safety messages that you must follow to prevent accidents.



g000502

Figure 3

Safety-alert symbol

The safety-alert symbol appears above information that alerts you to unsafe actions or situations and is followed by the word **DANGER**, **WARNING**, or **CAUTION**.

DANGER indicates an imminently hazardous situation which, if not avoided, **will** result in death or serious injury.

WARNING indicates a potentially hazardous situation which, if not avoided, **could** result in death or serious injury.

CAUTION indicates a potentially hazardous situation which, if not avoided, **may** result in minor or moderate injury.

This manual uses two other words to highlight information. **Important** calls attention to special mechanical information and **Note** emphasizes general information worthy of special attention.

General Safety

This product is capable of amputating hands and feet and of throwing objects. Always follow all safety instructions to avoid serious personal injury.

- Read and understand the contents of this *Operator's Manual* before starting the engine.
- Do not put your hands or feet near moving components of the machine.
- Do not operate the machine without all guards and other safety protective devices in place and functioning properly on the machine.
- Keep clear of the discharge opening.
- Keep bystanders and children out of the operating area. Do not allow children to operate the machine. Allow only people who are responsible, trained, familiar with the instructions, and physically capable to operate the machine.
- Stop the machine, shut off the engine, and remove the ignition key before servicing, fueling, or unclogging the machine.

Improperly using or maintaining this machine can result in injury. To reduce the potential for injury, comply with these safety instructions and always pay attention to the safety-alert symbol ⚠, which means Caution, Warning, or Danger—personal safety instruction. Failure to comply with these instructions may result in personal injury or death.

Safety and Instructional Decals

Safety decals and instructions are easily visible to the operator and are located near any area of potential danger. Replace any decal that is damaged or missing.



decalbatterysymbols

Battery Symbols

Some or all of these symbols are on your battery.

1. Explosion hazard
2. No fire, open flames, or smoking
3. Caustic liquid/chemical burn hazard
4. Wear eye protection.
5. Read the *Operator's Manual*.
6. Keep bystanders away.
7. Wear eye protection—explosive gases can cause blindness and other injuries.
8. Battery acid can cause severe burns.
9. Flush eyes immediately with water and get medical help fast.
10. Contains lead; do not discard.

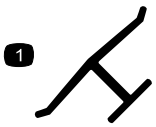

decaloemmarkt

Manufacturer's Mark

1. This mark indicates that the blade is identified as a part from the original machine manufacturer.

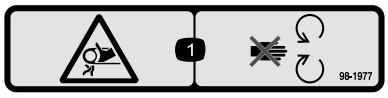

decal98-1977

98-1977

1. Entanglement hazard, belt—stay away from moving parts.

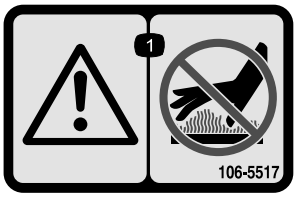

decal106-5517

106-5517

1. Warning—do not touch the hot surface.

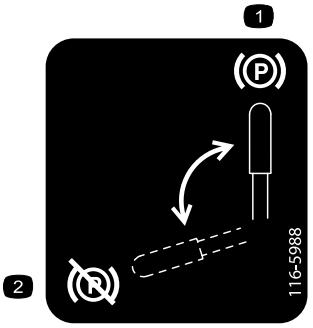

decal116-5988

116-5988

1. Parking brake—engaged
2. Parking brake—disengaged

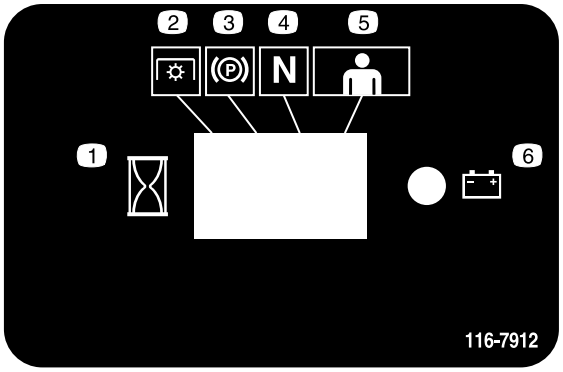

decal116-7912

116-7912

1. Interval
2. Power Take-off (PTO)
3. Parking brake
4. Neutral
5. Operator presence control
6. Battery

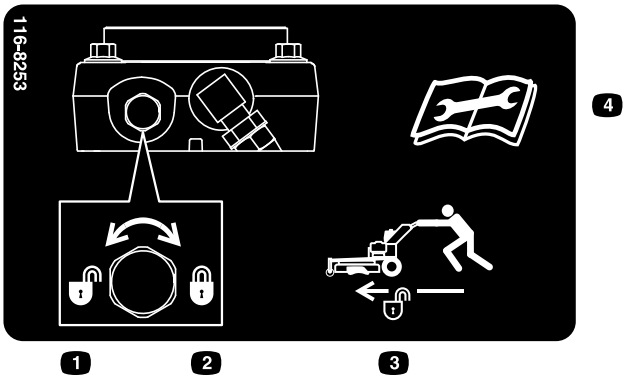

decal116-8253

116-8253

1. Rotate counterclockwise to release.
2. Rotate clockwise to lock.
3. Unlock to push machine.
4. Read the instructions before servicing or performing maintenance.

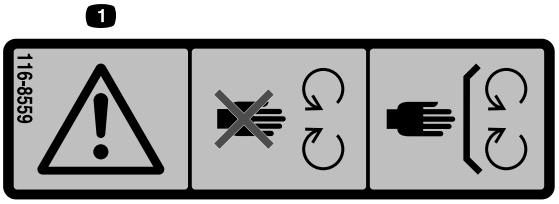

decal116-8559

116-8559

1. Warning–stay away from moving parts; keep all guards in place.

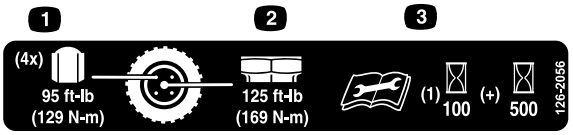

decal126-2056

126-2056

1. Wheel lug nut torque 95 ft-lb (129 N-m) (4x)
2. Wheel hub nut torque 125 ft-lb (169 N-m)
3. Read and understand the Operator's manual before performing any maintenance, check torque after first 100 hours then every 500 hours thereafter.

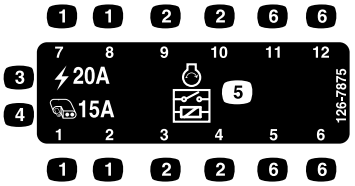

decal126-7875

126-7875

1. Fuse location
2. Relay location
3. Main, 20A
4. Auxiliary, 15A
5. Start relay
6. Not used



decal133-8062

133-8062



decal135-2412

135-2412

1. Warning-Read the Operator's Manual. Do Not operate this machine unless you are trained. Wear hearing protection.
2. Warning-Stay away from moving parts; keep all guards in place. Stop engine and remove key before adjusting, servicing, or cleaning.
3. Warning-Disengage PTO, move drive levers out to neutral lock position, engage parking brake, and stop engine before leaving the operator's position.
4. Thrown object hazard-Pick up objects that could be thrown by mower. Keep bystanders away. Keep deflector in place.
5. Cutting/dismemberment hazard-Mow across slopes not up and down. Do Not mow wet slopes–use extreme caution when operating on slopes.
6. Crushing/dismemberment hazard of bystanders - Do Not carry passengers, look forward and down when operating the machine, look behind and down when reversing.

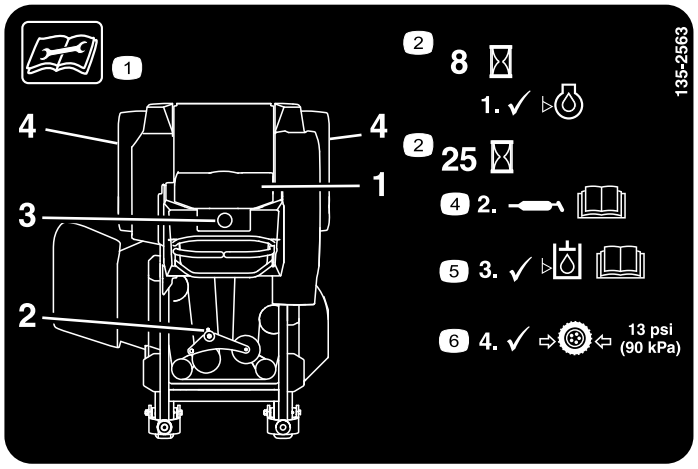

decal135-2563

135-2563

1. Read the instructions before servicing or performing maintenance
2. Time interval
3. Check oil level
4. Refer to the Operator's manual for grease instructions
5. Check hydraulic oil level and refer to the Operator's manual or further instructions
6. Check tire pressure

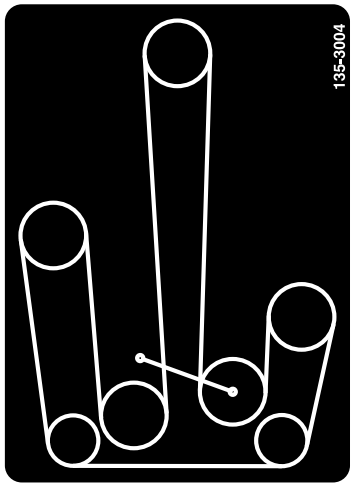

decal135-3004

135-3004

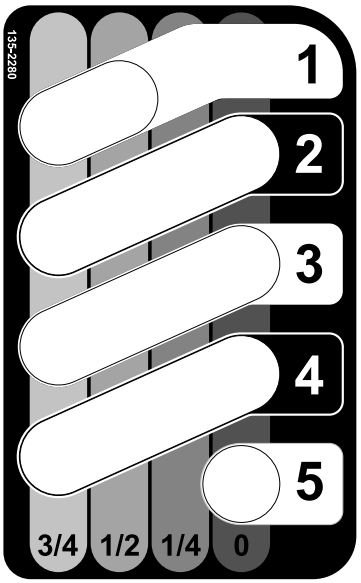

decal135-2280

142-3087

1. Height of cut

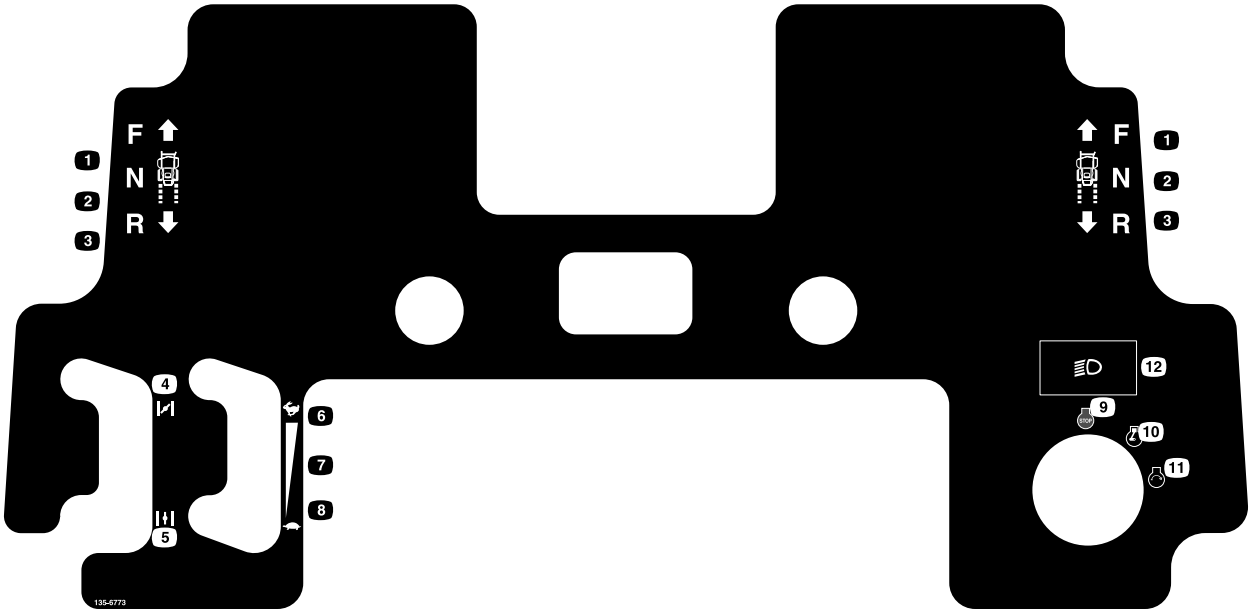

decal135-6773

135-6773

1. Forward
2. Neutral
3. Reverse
4. Choke-on
5. Choke-off
6. Throttle-fast
7. Continuous variable setting
8. Throttle-slow
9. Engine-off
10. Engine-on
11. Engine-start
12. Optional light accessory

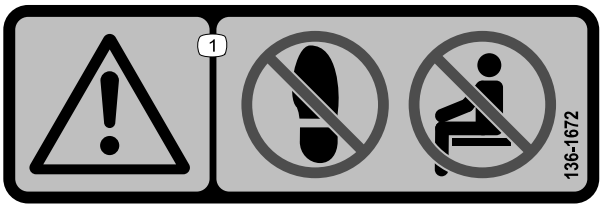

decal136-1672

136-1672

1. Warning—do not step; do not carry passenger.

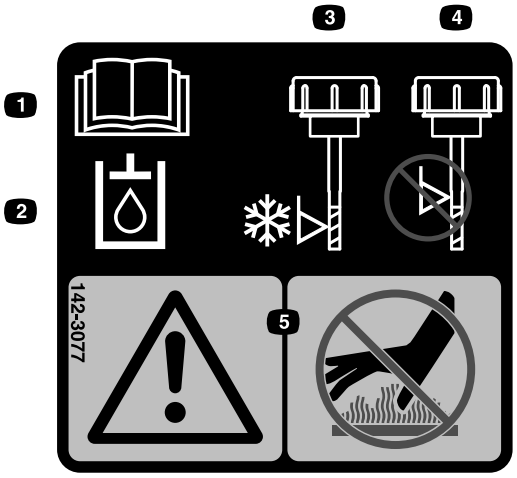

decal142-3077

142-3077

1. Read the Operator's manual.
2. Hydraulic fluid
3. Correct fill level when cold
4. Do Not overfill
5. Warning-Do Not touch the hot surface.

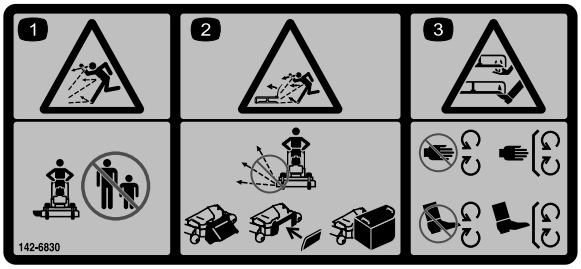

decal142-6830

142-6830

1. Thrown objects hazard - keep bystanders away.
2. Thrown objects hazard, mower - do not operate without the deflector, discharge cover or grass collection system in place.
3. Cutting/dismemberment of hand or foot - stay away from moving parts; keep all guards and shields in place.

1

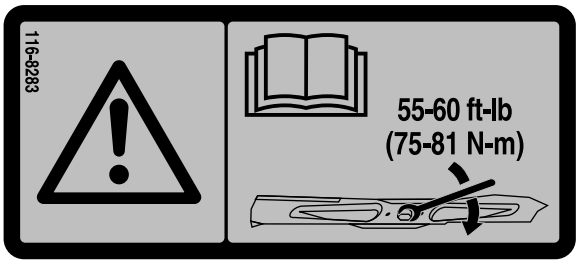

decal116-8283

116-8283

1. Warning—read the *Operator's Manual* for instructions on torquing the blade bolt/nut to 75 to 81 N·m (55 to 60 ft-lb).

Product Overview

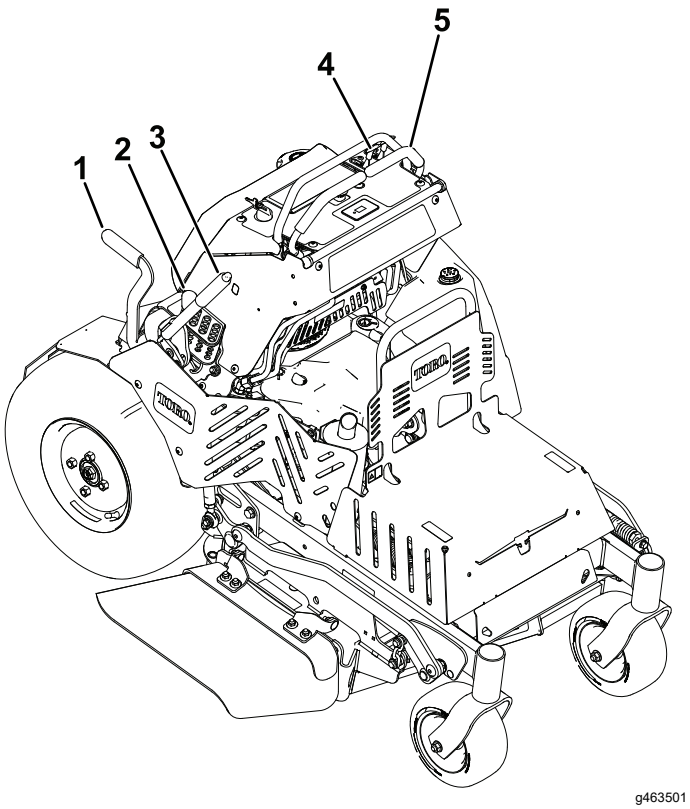

Figure 4

1. Parking-brake lever
2. Height of cut
3. Deck lift
4. Controls
5. Motion controls

Controls

Become familiar with all the controls before you start the engine and operate the machine.

Motion Control Levers

The motion control levers, located on each side of the top console, control the forward and reverse motion of the machine.

Moving the levers forward or backward turns the wheel on the same side forward or reverse respectively. The wheel speed is proportional to the amount the lever is moved.

Moving the levers outward, from the center position into the notch, locks them in the neutral position.

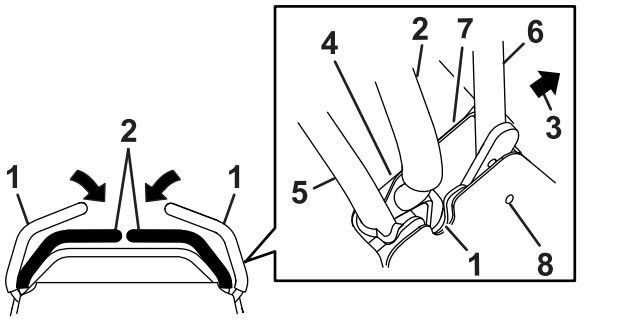

Figure 5

1. Neutral lock position (handles out)
2. Neutral operate position (handles in)
3. Front of machine
4. Reverse
5. Rear reference bar
6. Front reference/speed control bar
7. Forward
8. Adjustment hole

Note: When the levers are out in the neutral position, the neutral LCD indicator will appear, but the Operator Presence will not.

Note: When either lever is moved inward from the neutral position, the neutral LCD indicator will disappear and the Operator Presence indicator will appear.

Choke Control

Located on the left side of the control console (Figure 6).

The choke is used to aid in starting a cold engine. Moving the choke lever forward will put the choke in the ON position and moving the choke lever to the rear, to the detent, will put the choke in the OFF

position. Do not run a warm engine with choke in the ON position.

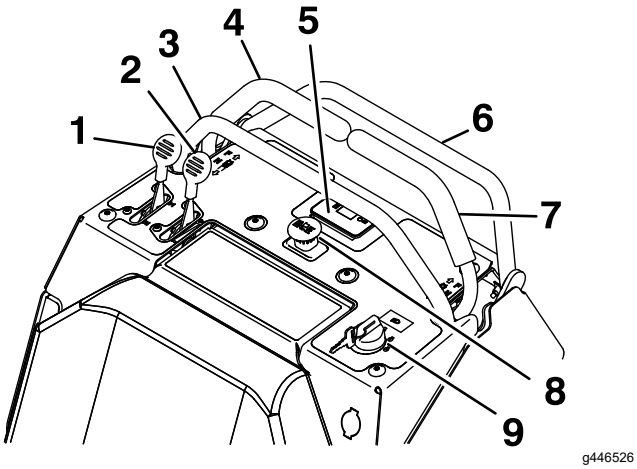

Figure 6

1. Choke
2. Throttle
3. Rear reference bar
4. Left motion-control lever
5. Message display
6. Front reference/speed control bar
7. Right motion-control lever
8. PTO switch
9. Ignition

Throttle Control

Located on the left side of the control console (Figure 6).

The throttle is used to control the engine speed. Moving the throttle lever forward will increase the engine speed and moving the throttle lever to the rear will decrease the engine speed. Moving the throttle forward into the detent is full throttle.

Parking-Brake Lever

Located on the right side of the machine.

The brake lever engages a parking brake on the drive wheels.

Note: The LCD indicator appears in the message display on the front console when the park brake is engaged (Figure 6 and Figure 8).

Pull the lever up and rearward to engage the brake.

Push the lever forward and down to disengage the brake.

When parking on a steep slope, the wheels must be chocked or blocked in addition to the brake being engaged. The machine must be tied down and brake engaged when transporting.

The parking-brake must be disengaged before moving motion control out of neutral or the engine must begin shutdown.

Ignition Switch

Located on the right side of the control console (Figure 6).

The ignition switch is used to start and stop the engine. The switch has three positions OFF, ON, and START. Insert the key into switch and rotate clockwise to the ON position. Rotate clockwise to the next position to engage the starter (the key must be held against the spring pressure in this position). Allow the key to return to the ON position immediately after the engine starts.

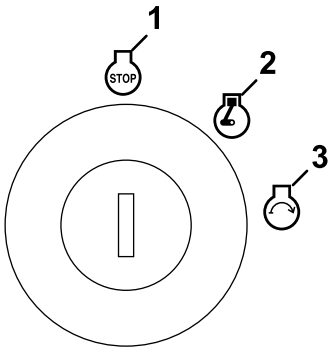

Figure 7

1. Off
2. On
3. Start

Note: To start the engine, place the motion control levers in neutral and disengage the PTO switch (it is not necessary for the operator to be on the platform).

Hour Meter

Located in the center of the front control console in the message display (Figure 8)

The hour meter records the number of hours that the engine has run.

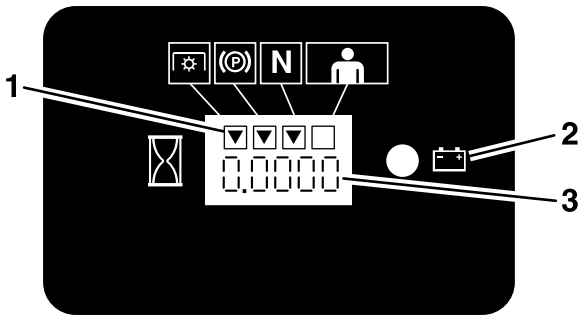

Figure 8

1. LCD indicators
2. Low voltage indicator light
3. Hour/voltage display

The hour meter is recording when the decimal point is flashing in the hour/voltage display.

The hours are displayed when the key is off or when the machine is running.

Note: If the ignition key is turned to the ON position for a few seconds before cranking the engine, the battery voltage will display in the area where the hours are normally displayed.

Note: The LCD indicators appear when each of the control meets the “safe to start” mode.

Fuel Shut-Off Valve

Located on the left side of the machine, towards the rear of the engine.

The fuel shut-off valve is used to shut off the fuel when the machine will not be used for a few days, during transport to and from the jobsite, and when parked inside a building.

Align valve handle with the fuel line to open. Rotate 90° to close.

Drive-Wheel Release Valves

Located on the right rear corner of the hydrostatic pumps.

The drive-wheel release valves are used to release the hydrostatic drive system to allow the machine to be moved by hand without the engine running.

With a wrench (5/8 inch), turn both of the valves one turn counterclockwise to release the drive system.

Turn clockwise to reset the drive system. Torque to 12 to 15 N·m (110 to 130 in-lb). **Do not overtighten. Do not tow the machine.**

PTO Switch

Located in the center of the console control below the hour meter (Figure 6).

The switch must be pulled out (up) to engage the blades. Switch is pushed in to disengage the blades.

The LCD indicator will disappear when the PTO switch is engaged (Figure 8).

Deck Lift Handle

Located on the right side of the front control panel.

Pull the handle rearward to raise the cutting deck. Allow the handle to move forward to lower the cutting deck to the cut height that has been set.

Pull the handle all the way rearward to latch the cutting deck into the raised transport position. Pull rearward and push the button down, on the top of the lever, to unlatch from transport.

Specifications

Note: Specifications and design are subject to change without notice.

	32in Mower Deck	36in Mower Deck
Cutting width	81.3 cm (32 inches)	91.4 cm (36 inches)
Width with deflector down	114 cm (44.9 inches)	121.9 cm (48 inches)
Width with deflector raised	85.6 cm (33.7 inches)	93.0 cm (36.6 inches)
Length	148.8 cm (75 inches)	
Height	120.1 cm (58.6 inches)	
Weight (weight will vary slightly depending on the deck size)	334 to 354 kg (737 to 781 lb)	

Attachments/Accessories

A selection of Toro approved attachments and accessories is available for use with the machine to enhance and expand its capabilities. Contact your Authorized Service Dealer or authorized Toro distributor or go to www.Toro.com for a list of all approved attachments and accessories.

To ensure optimum performance and continued safety certification of the machine, use only genuine Toro replacement parts and accessories. Replacement parts and accessories made by other manufacturers could be dangerous, and such use could void the product warranty.

Operation

Before Operation

Before Operation Safety

General Safety

- Never allow children or untrained people to operate the machine. Local regulations may restrict the age of the operator. The owner is responsible for training all operators and mechanics.
- Become familiar with the safe operation of the equipment, operator controls, and safety signs.
- Shut off the engine, remove the key, and wait for all moving parts to stop before leaving the operator's position. Allow the machine to cool before servicing, adjusting, fueling, cleaning, or storing it.
- Know how to stop the machine and shut off the engine quickly.
- Check that operator-presence controls, safety switches, and guards are attached and functioning properly. Do not operate the machine unless they are functioning properly.
- Before mowing, always inspect the machine to ensure that the blades, blade bolts, and cutting assemblies are in good working condition.
- Inspect the area where you will use the machine and remove all objects that the machine could throw.
- Evaluate the terrain to determine the appropriate equipment and any attachments or accessories required to operate the machine properly and safely.

Fuel Safety

- Fuel is extremely flammable and highly explosive. A fire or explosion from fuel can burn you and others and can damage property.
  - To prevent a static charge from igniting the fuel, place the container and/or machine directly on the ground before filling, not in a vehicle or on an object.
  - Fill the fuel tank outdoors, in an open area, when the engine is cold. Wipe up any fuel that spills.
  - Do not handle fuel when smoking or around an open flame or sparks.
  - Do not remove the fuel cap or add fuel to the tank while the engine is running or hot.
  - If you spill fuel, do not attempt to start the engine. Avoid creating a source of ignition until the fuel vapors have dissipated.
  - Store fuel in an approved container and keep it out of the reach of children.
- Fuel is harmful or fatal if swallowed. Long-term exposure to vapors can cause serious injury and illness.
  - Avoid prolonged breathing of vapors.
  - Keep your hands and face away from the nozzle and the fuel-tank opening.
  - Keep fuel away from your eyes and skin.
- Do not store the machine or fuel container where there is an open flame, spark, or pilot light, such as on a water heater or on other appliances.
- Do not fill containers inside a vehicle or on a truck or trailer bed with a plastic liner. Always place containers on the ground, away from your vehicle before filling.
- Remove the equipment from the truck or trailer and refuel it while it is on the ground. If this is not possible, then refuel from a portable container rather than a fuel-dispenser nozzle.
- Do not operate the machine without the entire exhaust system in place and in proper working condition.
- Keep the fuel-dispenser nozzle in contact with the rim of the fuel tank or container opening at all times until fueling is complete. Do not use a nozzle lock-open device.
- If you spill fuel on your clothing, change your clothing immediately. Wipe up any fuel that spills.
- Never overfill the fuel tank. Replace the fuel cap and tighten it securely.

Adding Fuel

Recommended Fuel

- For best results, use only clean, fresh (less than 30 days old), unleaded gasoline with an octane rating of 87 or higher ((R+M)/2 rating method).
- **Ethanol**: Gasoline with up to 10% ethanol (gasohol) or 15% MTBE (methyl tertiary butyl ether) by volume is acceptable. Ethanol and MTBE are not the same. Gasoline with 15% ethanol (E15) by volume is not approved for use. **Never use gasoline that contains more than 10% ethanol by volume**, such as E15 (contains 15% ethanol), E20 (contains 20% ethanol), or E85 (contains up to 85% ethanol). Using unapproved gasoline may cause performance problems and/or

engine damage which may not be covered under warranty.

- **Do not** use gasoline containing methanol.
- **Do not** store fuel either in the fuel tank or fuel containers over the winter unless you use a fuel stabilizer.
- **Do not** add oil to gasoline.

Using Stabilizer/Conditioner

Use fuel stabilizer/conditioner in the machine to keep the fuel fresh longer when used as directed by the fuel-stabilizer manufacturer.

Important: **Do not use fuel additives containing methanol or ethanol.**

Add the amount of fuel stabilizer/conditioner to fresh fuel as directed by the fuel-stabilizer manufacturer.

Filling the Fuel Tank

1. Park the machine on a level surface, disengage the PTO, move the motion-control levers to the NEUTRAL-LOCK position, and engage the parking brake.
2. Shut off the engine, remove the key, and wait for all moving parts to stop before leaving the operating position.
3. Clean around the fuel-tank cap and remove the cap.
4. Fill the fuel tank to the bottom of the filler neck.

   Note: Do not fill the fuel tank completely full. The empty space in the tank allows the fuel to expand.
5. Install the fuel-tank cap securely. Wipe up any spilled fuel.

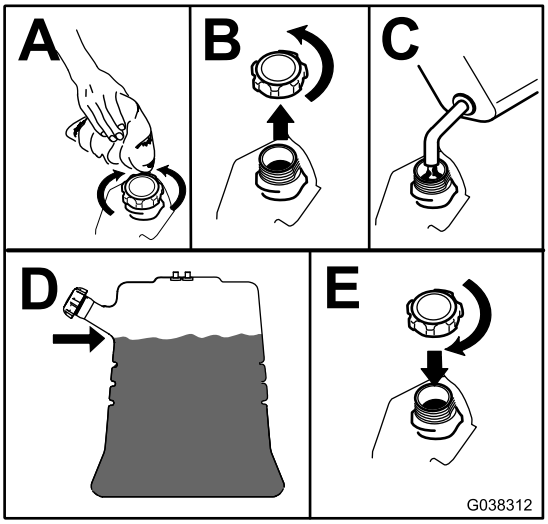

g038312

Figure 9

Before Operations Checks

Perform the following daily procedures before operating the machine:

- Checking the Engine-Oil Level (page 27)
- Checking the Mower Blades (page 38)
- Checking for Loose Hardware (page 41)

Checking the Safety Interlock System

Important: **It is essential that operator safety mechanisms be connected and in proper operating condition prior to use.**

Note: If the machine does not pass any of these tests, **do not** operate. Contact an Authorized Service Dealer.

Checking the Normal Engine Starting Chart

Note: It is not necessary for the operator to be on the platform to start the engine.

	System		
	PTO (Blades)	**Motion Control Levers**	**Outcome**
State of System	Disengaged 	Both levers out (neutral) 	Starter should crank 
	Up position, but blades disengaged* 	Both levers out (neutral) 	Starter should crank 

***Note:** The starter will crank with the PTO switch in the “ON” (pulled up) position; however, the system will disengage the PTO and a reset PTO error will occur. Engaging the PTO will require the operator to reset the PTO switch by turning it “OFF” (pushed down) and then turning it “ON”.

Checking the Engine Starting Circuit Chart

Note: The state of system item that is bold is being checked in each scenario.

	System		
	PTO (Blades)	**Motion Control Levers**	**Outcome**
State of System	Disengaged 	Both levers not in neutral 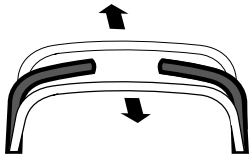	Starter must not crank 
	Engaged 	Both levers in neutral 	Starter must not crank 

Checking the Shutdown Circuit Chart

Note: The state of system item(s) that is bold is being checked in each scenario.

	System			
	Engine	**PTO (Blades)**	**Motion Control Levers**	**Outcome**
State of System	Running idle (1/3 throttle) 	Engaged 	**Both levers out (neutral lock)** 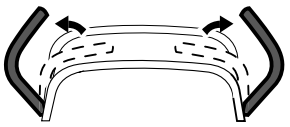	**PTO** must begin shutdown within 1 second; engine stays running. 

	System			
	Engine	**Parking Brake**	**Motion Control Levers**	**Outcome**
State of System	Running idle (1/3 throttle) 	Engaged 	**Both levers not in neutral** 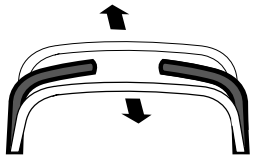	Engine must begin shutdown within 1 second 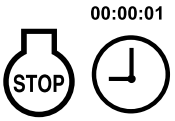

Breaking in a New Machine

New engines take time to develop full power. Mower decks and drive systems have higher friction when new, placing additional load on the engine. Allow 40 to 50 hours of break-in time for new machines to develop full power and best performance.

During Operation

During Operation Safety

General Safety

- The owner/operator can prevent and is responsible for accidents that may cause personal injury or property damage.
- Wear appropriate clothing, including eye protection; long pants; substantial, slip-resistant footwear; and hearing protection. Tie back long hair and do not wear loose clothing or loose jewelry.
- Use your full attention while operating the machine. Do not engage in any activity that causes distractions; otherwise, injury or property damage may occur.
- Do not operate the machine while ill, tired, or under the influence of alcohol or drugs.
- Never carry passengers on the machine and keep bystanders and pets away from the machine during operation.
- Operate the machine only in good visibility and appropriate weather conditions. Do not operate the machine when there is the risk of lightning.
- Wet grass or leaves can cause serious injury if you slip and contact the blade. Avoid mowing in wet conditions.
- Before you start the engine, ensure that all drives are in neutral, the parking brake is engaged, and you are in the operating position.
- Ensure that you have good footing while using this machine, especially when backing up.
- Keep your hands and feet away from the cutting units. Keep clear of the discharge opening at all times.
- Look behind and down before backing up to be sure of a clear path.
- Use extreme care when approaching blind corners, shrubs, trees, or other objects that may block your view.
- Stop the blades whenever you are not mowing.
- Stop the machine, remove the ignition key, and wait for all moving parts to stop before inspecting the mower deck or attachment after striking an object or if there is an abnormal vibration in the

machine. Make all necessary repairs before resuming operation.

- Slow down and use caution when making turns and crossing roads and sidewalks with the machine. Always yield the right-of-way.
- Disengage the cutting unit and shut off the engine before adjusting the height of cut (unless you can adjust it from the operating position).
- Operate the engine only in well-ventilated areas. Exhaust gases contain carbon monoxide, which is lethal if inhaled.
- Never leave a running machine unattended.
- Before leaving the operating position (including to empty the catchers or to unclog the chute), do the following:
  - Park the machine on a level surface.
  - Disengage the power take-off.
  - Engage the parking brake.
  - Shut off the engine and remove the ignition key.
  - Wait for all moving parts to stop.
- Shut off the machine and disengage the drive to the cutting unit in the following situations:
  - Before fueling
  - Before clearing blockages
  - Before checking, cleaning, or maintaining the cutting unit
  - After striking a foreign object or if an abnormal vibration occurs. Inspect the cutting unit for damage and make repairs before starting and operating the machine
  - Before leaving the operating position
- Do not use the machine as a towing vehicle.
- Use only accessories and attachments approved by The Toro® Company.

Slope Safety

- Slopes are a major factor related to loss of control and rollover accidents, which can result in severe injury or death. You are responsible for safe slope operation. Operating the machine on any slope requires extra caution. Before using the machine on a slope, do the following:
  - Review and understand the slope instructions in the manual and on the machine.
  - Evaluate the site conditions of the day to determine if the slope is safe for machine operation. Use common sense and good judgment when performing this evaluation. Changes in the terrain, such as moisture, can quickly affect the operation of the machine on a slope.
- Operate across slopes, never up and down. Avoid operation on excessively steep or wet slopes.
- Identify hazards at the base of the slope. Do not operate the machine near drop-offs, ditches, embankments, water, or other hazards. The machine could suddenly roll over if a wheel goes over the edge or the edge collapses. Keep a safe distance (twice the width of the machine) between the machine and any hazard. Use a walk-behind machine or a handheld tool to operate in these areas.
- Avoid starting, stopping, or turning the machine on slopes. Avoid making sudden changes in speed or direction; turn slowly and gradually.
- Do not operate a machine under any conditions where traction, steering or stability is in question. Be aware that operating the machine on wet grass, across slopes or downhill may cause the machine to lose traction. Loss of traction to the drive wheels may result in sliding and a loss of braking and steering. The machine can slide even if the drive wheels are stopped.
- Remove or mark obstacles such as ditches, holes, ruts, bumps, rocks, or other hidden hazards. Tall grass can hide obstacles. Uneven terrain could overturn the machine.
- Use extra care while operating with accessories or attachments. These can change the stability of the machine and cause a loss of control. Follow directions for counterweights.
- If you lose control of the machine, step off and away from the direction of travel of the machine.

Opening the Fuel Shut-Off Valve

Rotate the valve and align with the fuel line open.

Operating the Engine

Starting the Engine

1. Move the motion control levers out to the neutral lock position.
2. Pull the parking brake up and rearward to engage the parking brake.
3. Push down on the PTO switch to the disengage position.
4. Place the throttle midway between the SLOW and FAST positions.
5. On a cold engine, push the choke lever forward into the ON position.

   On a warm engine, leave the choke in the OFF position.
6. Turn ignition switch to the START position. Release the switch as soon as the engine starts.

   Important: **Do not crank the engine continuously for more than 10 seconds at a time. If the engine does not start, allow a 60 second cool-down period between starting attempts. Failure to follow these guidelines can burn out the starter motor.**
7. If the choke is in the ON position, gradually return choke to the OFF position as the engine warms up.

Stopping the Engine

1. Bring the machine to a full stop.
2. Move the motion control levers out to the neutral lock position.
3. Place the throttle midway between the SLOW and FAST positions.
4. Push down on the PTO switch to disengage the blades.
5. Engage the parking brake.
6. Allow the engine to run for a minimum of 15 seconds, then turn the ignition switch to the OFF position to stop the engine.
7. Remove the key to prevent children or other unauthorized persons from starting engine.
8. Close the fuel shut-off valve when the machine will not be in use for a few days, when transporting, or when the unit is parked inside a building.

Operating the PTO Switch

⚠ DANGER

The rotating blades under the mower deck are dangerous. Blade contact can cause serious injury or kill you.

Do not put hands or feet under the mower or mower deck when the blades are engaged.

⚠ DANGER

An uncovered discharge opening will allow objects to be thrown in an operator's or bystander's direction. Also, contact with the blade could occur. Thrown objects or blade contact can cause serious injury or death.

Never operate the mower with the discharge deflector raised, removed, or altered unless there is a grass collection system or mulch kit in place and working properly.

Engaging the PTO Switch

The PTO switch engages the cutting blades. Be sure all persons are clear of mower deck and discharge area before engaging the PTO.

1. Set throttle to MIDWAY position.
2. Release the parking brake.
3. Move the motion control levers to the center, operate position.
4. Pull the PTO switch outward to engage the blades.
5. Place the throttle in the FAST position to begin mowing.

Disengaging the PTO Switch

1. Set the throttle midway between the SLOW and FAST positions.
2. Push down on the PTO switch to disengage the blades.

Driving the Machine

⚠ CAUTION

The machine can spin very rapidly by positioning one lever too much ahead of the other. The operator may lose control of the machine, which may cause damage to the machine or injury.

- **Use caution when making turns.**
- **Slow the machine down before making sharp turns.**

Important: **To begin movement (forward or backward), the brake lever must be disengaged (pushed forward) before the motion control levers can be moved or the engine will stop.**

When the motion control levers are positioned fully outward (apart), the drive system is in the PTO disengage position (Figure 10).

Note: The “N” LCD indicator appears when both levers are in the neutral lock position.

When the motion control levers are moved directly inward (together) the drive system is in the neutral operate position.

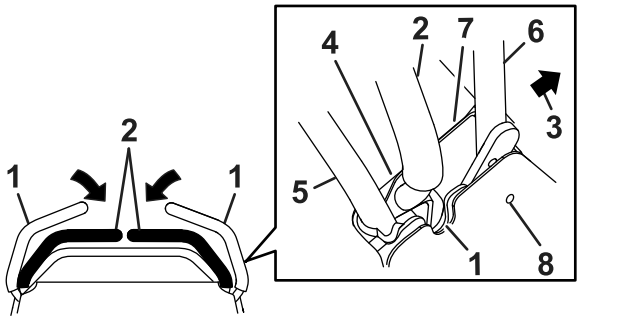

g224633

Figure 10

1. Neutral lock position (handles out)
2. Neutral operate position (handles in)
3. Front of machine
4. Reverse
5. Rear reference bar
6. Front reference/speed control bar
7. Forward
8. Adjustment hole

Driving Forward

1. Make sure the motion control levers are in the neutral position.
2. Release the parking brake.
3. To move forward in a straight line, move both levers forward with equal pressure.

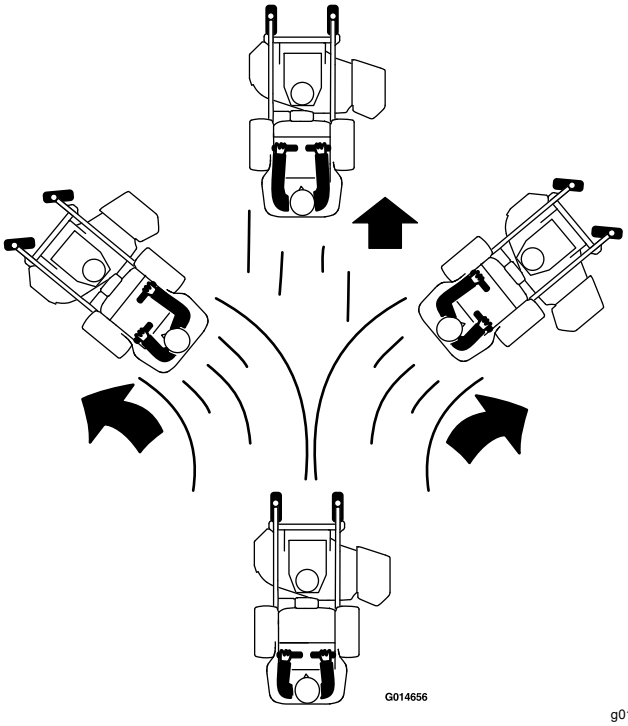

g014656

Figure 11

To turn left or right, pull the motion control lever back toward neutral in the desired turn direction.

The machine will move faster the farther the motion control levers are moved from the neutral position.

4. To stop, position both of the motion control levers in the neutral operate position.

Driving in Reverse

1. Move the motion control levers to the neutral operate position.
2. To move rearward in a straight line, slowly move both of the levers rearward with equal pressure.

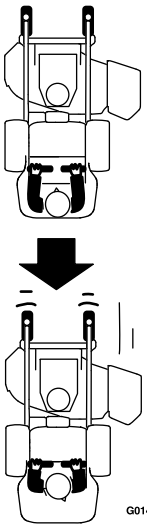

g014657

Figure 12

To turn left or right, release pressure on the motion control lever toward the desired turn direction.

3. To stop, position both motion control levers in the neutral operate position.

Adjusting the Front Reference Bar

1. Insert a allen wrench (7/32 inch) through the hole on one side of the control tower panel. Place a wrench (9/16 inch) on the corresponding nut located underneath the control tower. Loosen the bolt and repeat for the opposite side of the front reference bar (Figure 10).
2. Rotate the bar forward or rearward, limiting the forward travel of the control levers until the desired maximum forward speed is achieved.
3. Tighten the bolts to lock the reference bar in place.

Adjusting the Cutting Height

The cutting height of the mower deck is adjusted from 2.54 cm to 11.43 cm (1 to 4.5 inches) in 6.35 mm (1/4 inch) increments.

1. Stop the machine and move the motion control levers outward to the neutral locked position.
2. Disengage the PTO switch.
3. Raise and lock the deck to the 4.5 inch (11.43 cm) transport position (Figure 13).

The deck is raised by pulling the deck lift handle rearward and to the right to place it into the transport lock position.

Note: When changing the cutting height positions, always come to a complete stop and disengage the PTO.

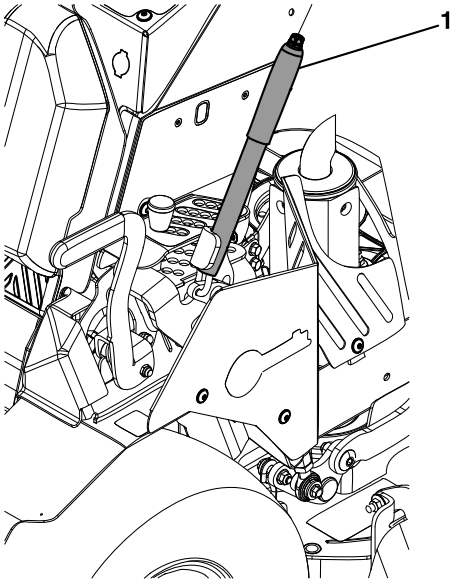

g446539

Figure 13

1. Deck lift handle

4. Insert the height adjustment pin into the hole corresponding to the desired cutting height.

   See the decal on the top of the deck lift plate for cut heights.
5. Pull the deck lift handle rearward, press the release button, and push slowly downward to allow the deck to lower to the cutting height.

Adjusting the Operator Platform

The operator's platform on the machine can be adjusted for ride comfort and has different 3 settings.

1. Stop the machine and move the motion control levers outward to the neutral locked position.
2. Engage the park brake.
3. Stop the engine, remove the key, and wait for all moving parts to stop.
4. Remove and retain the pad from the operator's platform.
5. Under the platform, loosen both nuts (5/16 inch) located inside the isolators. Do not remove the nuts completely.

6. On each side, move the isolators to the desired comfort level based on one of the 3 slots (Figure 14).
   - For a softer ride, move both of the isolators forward or closer to the platform pivot point.
   - For a firmer ride, move the isolators rearward or away from the platform pivot point.

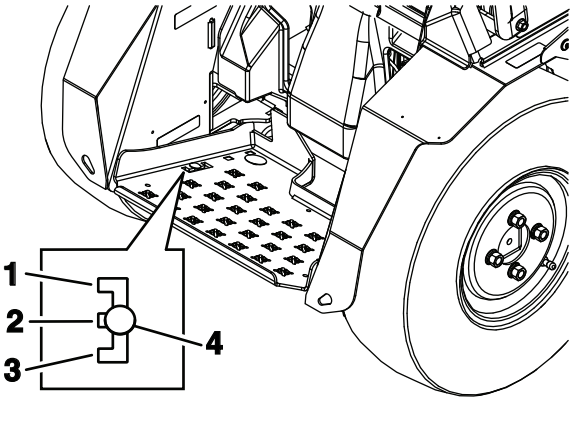

g350032

Figure 14

1. Soft
2. Moderate (center)
3. Firm
4. Bolt

7. Once both sides are adjusted to the same slot location, tighten the nuts. Reinstall the platform pad.

Adjusting the Anti-Scalp Rollers

It is recommended to change the anti-scalp roller position when the height of cut has changed

1. Stop the machine and move the drive levers to the neutral lock position.
2. Disengage the PTO.
3. Engage the parking brake.
4. Stop the engine, remove the key, and wait for all moving parts to stop.
5. After adjusting the height of cut, adjust the anti-scalp rollers by removing the nyloc nut, spring disc washer, axle roller, and bolt.
6. Adjust anti-scalp rollers for normal operating conditions. Place rollers in one of the positions shown in Figure 15. Rollers will maintain 19 mm (3/4 inches) clearance to the ground to minimize gouging and roller wear or damage.

   Note: For maximum deck flotation, place rollers one hole position lower. The rollers should maintain 6.35 mm (1/4 inch) clearance to ground. Do not adjust the rollers to support the deck.

   Note: The roller may need to be removed when mowing at 25 mm (1 inch).

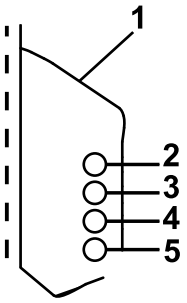

g463656

Figure 15

For cutting heights above 90 mm (3.5 inches) use the bottom hole. The rollers will still be effective against scalping.

1. Anti-scalp roller mounting bracket
2. 51 mm (2.0 inches) cutting height
3. 64 mm (2.5 inches) cutting height
4. 76 mm (3.0 inches) cutting height
5. 90 mm (3.5 inches) cutting height

7. Ensure the roller bolts are installed with the spring disc washer between head of the bolt and mounting bracket.
8. Torque the nyloc nut (3/8 inch) to 68 to 75 N·m (50 to 55 ft-lb) (Figure 16).

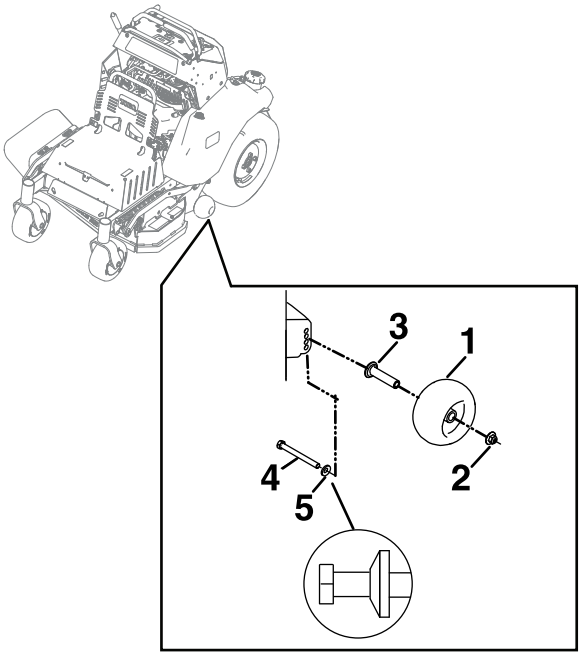

g463655

Figure 16

1. Anti-scalp roller
2. Nyloc nut (3/8 inch)
3. Axle roller
4. Grade B bolt (3/8 x 3-3/4 inches)
5. Spring disc washer (cone towards bolt)

After Operation

After Operation Safety

General Safety

- Always shut off the machine, remove the ignition key, wait for all moving parts to stop, and allow the machine to cool before adjusting, servicing, cleaning, or storing it.
- Clean grass and debris from the cutting units, mufflers, and engine compartment to help prevent fires. Clean up oil or fuel spills.
- Shut off the fuel before storing or transporting the machine.
- Disengage the PTO whenever you are transporting or not using the machine.
- Never store the machine or fuel container where there is an open flame, spark, or pilot light, such as on a water heater or on other appliances.
- Use full-width ramps for loading the machine into a trailer or truck.
- Tie the machine down securely using straps, chains, cable, or ropes. Both front and rear straps should be directed down and outward from the machine.

Transporting the Machine

⚠ WARNING

Driving on the street or roadway without turn signals, lights, reflective markings, or a slow-moving-vehicle emblem is dangerous and can lead to accidents, causing personal injury.

Do not drive the machine on a public street or roadway.

Transporting the Machine

Use a heavy-duty trailer or truck to transport the machine. Ensure that the trailer or truck has all necessary lighting and marking as required by law. Thoroughly read all of the safety instructions. Knowing this information could help you, your family, pets, or bystanders avoid injury.

To transport the machine:

- Use full width ramps when loading the machine.
- Be sure the fuel shut-off valve is closed.
- Engage the park brake, then block the wheels. Do not rely solely on the parking brake to hold the machine on the trailer.
- Securely fasten the machine to the trailer or truck with straps, chains, cable, or ropes. If possible, both front and rear straps should be directed down and outward from the machine.
- Secure a trailer to the towing vehicle with safety chains.

Loading the Machine

⚠ WARNING

Loading a machine on a trailer or truck increases the possibility of backward tip-over. Backward tip-over could cause serious injury or death.

- **Use extreme caution when operating a machine on a ramp.**
- **Use only a single, full width ramp; Do not use individual ramps for each side of the machine.**
- **If individual ramps must be used, use enough ramps to create an unbroken ramp surface wider than the machine.**
- **Avoid sudden acceleration while driving machine up a ramp to avoid tipping backward.**
- **Avoid sudden deceleration while backing machine down a ramp to avoid tipping backward.**

Use extreme caution when loading machines on trailers or trucks. One full width ramp that is wide enough to extend beyond the rear tires is recommended instead of individual ramps for each side of the machine. A full width ramp provides a surface to walk on behind the machine. If it is not possible to use one full width ramp, use enough individual ramps to simulate a full width continuous ramp.

A steep ramp angle may cause components to get caught as the machine moves from ramp to trailer or truck. Steeper angles may also cause the machine to tip backward. If loading on or near a slope, position the trailer or truck so it is on the down side of the slope and the ramps extends up the slope. This will minimize the ramp angle. The trailer or truck should be as level as possible.

Important: **Do not attempt to turn the machine while on the ramp, you may lose control and drive off the side.**

Avoid sudden acceleration when driving up a ramp and sudden deceleration when backing down a ramp. Both maneuvers can cause the machine to tip backward.

Maintenance

Note: Determine the left and right sides of the machine from the normal operating position.

⚠ CAUTION

If you leave the ignition key in the switch, someone could accidently start the engine and serious injure you or other bystanders.

Remove the ignition key from the switch before you perform any maintenance.

Maintenance Safety

- Before adjusting, cleaning, servicing, or leaving the machine, do the following:
  - Park the machine on a level surface.
  - Disengage the drives.
  - Engage the parking brake.
  - Shut off the engine and remove the ignition key.
  - Wait for all moving parts to stop.
  - Allow machine components to cool before performing maintenance.
- Do not allow untrained personnel to service the machine.
- Keep your hands and feet away from moving parts. If possible, do not make adjustments with the engine running.
- Carefully release pressure from components with stored energy.
- Check the parking brake operation frequently. Adjust and service the brake as needed.
- Never tamper with safety devices. Check their proper operation regularly.
- Clean grass and debris from the cutting unit, drives, muffler, and engine to help prevent fires. Clean up oil or fuel spills.
- Check the grass catcher components frequently and replace them when they are worn or damaged.
- Do not rely on a hydraulic system to support the machine; support the machine with jack stands whenever you raise the machine.
- Keep all parts in good working condition and all hydraulic fittings tight. Replace all worn, damaged, or missing parts and decals. Keep all fasteners tight to ensure that the machine is in safe working condition.
- To ensure optimum performance and continued safety certification of the machine, use only genuine Toro replacement parts and accessories. Replacement parts and accessories made by other manufacturers could be dangerous, and such use could void the product warranty.

Recommended Maintenance Schedule(s)

Maintenance Service Interval	Maintenance Procedure
After the first 5 hours	• Change the engine oil.
After the first 100 hours	• Check the wheel hub torque specification. • Check the wheel lug nuts.
After the first 250 hours	• Change the hydraulic filter and fluid.
Before each use or daily	• Check the engine-oil level. • Check for loose hardware. • Clean the grass and debris build-up from the machine and cutting deck. • Clean the engine and exhaust system area. • Clean the grass build-up from under the deck.
Every 25 hours	• Service the foam element. (May need more often under severe conditions. See the Engine Owner's manual for additional information.)
Every 50 hours	• Check spark arrester (if equipped). • Check the tire pressures. • Check the condition of the belts. • Check the hydraulic oil level.
Every 80 hours	• Remove engine shrouds and clean cooling fins.

Maintenance Service Interval	Maintenance Procedure
Every 100 hours	• Service the paper element. (May need more often under severe conditions. See the Engine Owner's manual for additional information.) • Change the engine oil. (May need more often under severe conditions.)
Every 160 hours	• Check the spark plugs.
Every 200 hours	• Replace the paper element.
Every 500 hours	• Check the wheel hub torque specification. • Check the wheel lug nuts. • Change the hydraulic filter and fluid (Every 250 hours/Yearly if using Mobil 1 15W50)
Yearly	• Grease the deck belt idler pivot.

Important: **Refer to your engine owner's manual for additional maintenance procedures.**

Pre-Maintenance Procedures

Lift the Thigh Pad for Rear Access

The pad can be locked open to allow access to the hydro oil, pumps, ground drive belt, rotating screen, oil dipstick, and the fuel shut-off valves.

1. Lower the platform.
2. Lift the thigh pad all the way up. The pad will lock in an upwards position.

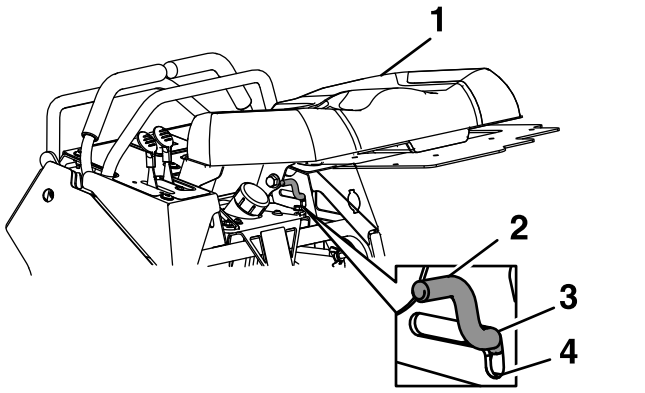

Figure 17

1. Thigh pad
2. Wireform
3. Released position
4. Locked position

3. Perform any maintenance or adjustment on the machine.
4. Lift up on the wireform on the right side under the pad and lower the pad.

Removing the Rear Guard

1. Raise and lock the thigh pad.
2. Grab the top of the rear guard and pull rearward.
3. The top of the rear guard will pop loose from the brake shaft. Lift the guard from the slots in the frame and remove.

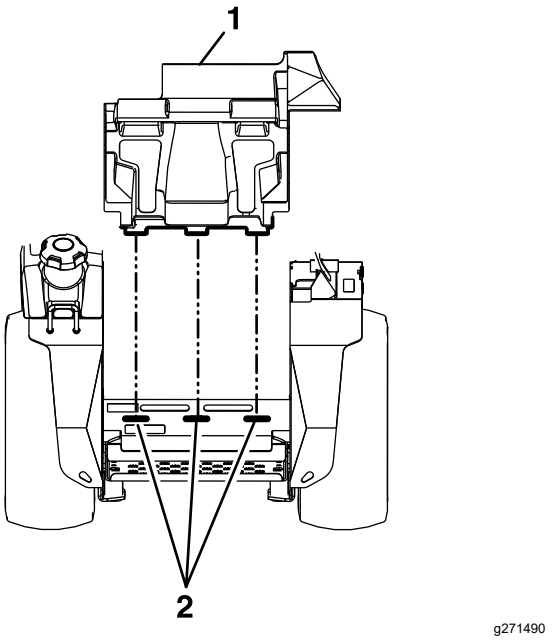

Figure 18

1. Rear guard
2. Slot

Installing the Rear Guard

To reinstall the rear guard, insert the three tabs into the slots in the bottom of the frame (Figure 18). Push the guard forward and snap over the brake shaft.

Lubrication

Lubricating the Grease Fittings

Service Interval: Yearly

Note: See the chart for the service intervals.

1. Park the machine on a level surface, disengage the PTO, and engage the parking brake.
2. Shut off the engine, remove the key, and wait for all moving parts to stop before leaving the operating position.
3. Lubricate fittings with NLGI grade #2 multi-purpose gun grease.

   Refer to the following chart for fitting locations and lubrication schedule.

Lubrication Chart

Fitting Locations	Initial Pumps	Number of Places	Service Interval
1. Deck Belt Idler Pivot	1	1	Yearly

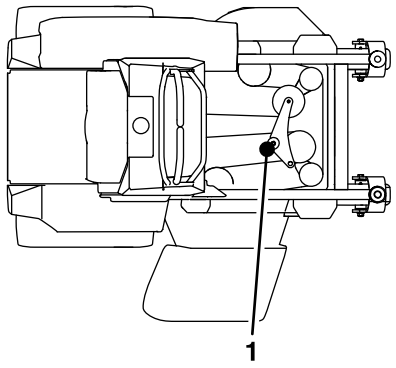

Engine Maintenance

Important: **Refer to the engine owner's manual for additional maintenance procedures.**

⚠ WARNING

The engine can become very hot, especially the muffler and exhaust components. Touching a hot engine can cause severe burns.

Allow the engine to cool completely before service or making repairs around the engine area.

Engine Safety

- Shut off the engine before checking the oil or adding oil to the crankcase.
- Keep your hands, feet, face, clothing, and other body parts away from the muffler and other hot surfaces.
- Do not change the engine governor setting or overspeed the engine.

Servicing the Air Cleaner

Service Interval: Every 25 hours—Service the foam element. (May need more often under severe conditions. See the Engine Owner's manual for additional information.)

Every 100 hours—Service the paper element. (May need more often under severe conditions. See the Engine Owner's manual for additional information.)

Every 200 hours/Yearly (whichever comes first)—Replace the paper element.

1. Park the machine on a level surface, disengage the PTO, and engage the parking brake.
2. Shut off the engine, remove the key, and wait for all moving parts to stop before leaving the operating position.
3. See the engine owner's manual for maintenance instructions.

Changing the Engine Oil

Service Interval: After the first 5 hours

Every 100 hours (May need more often under severe conditions.)

1. Park the machine on a level surface, disengage the PTO, and engage the parking brake.
2. Shut off the engine, remove the key, and wait for all moving parts to stop before leaving the operating position.
3. Drain oil while engine is warm from operation.
4. Lift and lock the thigh pad.
5. Remove and retain the rear guard.
6. Remove and retain the knob, washer, and air deflector located under the machine.

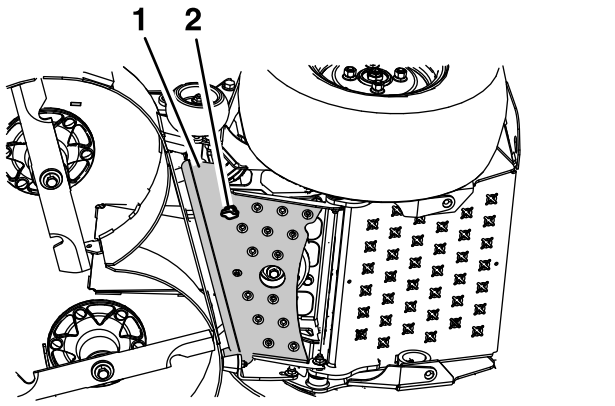

g271831

Figure 19

1. Air deflector
2. Knob and washer

7. The oil drain valve is located on the left side of the engine.

   Place the pan under the machine to catch the oil. Loosen the oil drain valve and allow the oil to drain. Tighten the oil drain valve.
8. Replace the oil filter per the Engine Owner's Manual. Clean around the oil filter and carefully remove the filter by unscrewing it. Make sure no oil drains onto the belt drive or clutch through the holes in the engine deck. Before the new filter is installed, apply a thin coating of oil on the surface of the rubber seal. Turn filter clockwise until rubber seal contacts the filter adapter, then tighten filter an additional 2/3 to 3/4 turn.
9. Clean around oil fill cap and remove cap. Fill to specified capacity and replace cap.
10. Use oil recommended in the Checking the Engine-Oil Level (page 27) section. **Do not** overfill. Start the engine and check for leaks. Stop engine and recheck oil level.
11. Wipe up any spilled oil from engine deck mounting surfaces.
12. Reinstall the air deflector and rear guard.
13. Lower the thigh pad.

Checking the Engine-Oil Level

Service Interval: Before each use or daily

1. Park the machine on a level surface, disengage the PTO, and engage the parking brake.
2. Shut off the engine, remove the key, and wait for all moving parts to stop before leaving the operating position.
3. Complete the check with the engine cold.
4. Clean the area around dipstick. Remove the dipstick and wipe oil off. Reinsert the dipstick according to the engine manufacturer's recommendations. Remove the dipstick and read the oil level.
5. If the oil level is low, wipe off the area around the oil fill cap, remove the cap and fill to the FULL mark on the dipstick. Refer to the Engine Owner's Manual for an appropriate API rating and viscosity. **Do not** overfill.

Important: **Do not operate the engine with the oil level below the LOW (or ADD) mark on the dipstick, or over the FULL mark.**

Checking the Spark Plugs

Service Interval: Every 160 hours

Remove spark plugs, check condition and reset gaps, or replace with new plugs. See Engine Owner's Manual.

Checking the Spark Arrester (if equipped)

Service Interval: Every 50 hours

⚠ WARNING

Hot exhaust system components may ignite gasoline vapors even after the engine is stopped. Hot particles exhausted during engine operation may ignite flammable materials. Fire may result in personal injury or property damage.

Do not refuel or run engine unless spark arrester is installed.

1. Park the machine on a level surface, disengage the PTO, and engage the parking brake.
2. Shut off the engine, remove the key, and wait for all moving parts to stop before leaving the operating position.
3. Wait for muffler to cool.
4. If any breaks in the screen or welds are observed, replace arrester.
5. If plugging of the screen is observed, remove the arrester and shake loose particles out of the arrester and clean screen with a wire brush (soak in solvent if necessary). Reinstall the arrester on exhaust outlet.

Fuel System Maintenance

Changing the Fuel Filter

A fuel filter is installed in the fuel line between the fuel tank and the engine. Replace when necessary.

Electrical System Maintenance

Electrical System Safety

- Disconnect the battery or remove the spark-plug wire before making any repairs. Disconnect the negative terminal first and the positive terminal last. Connect the positive terminal first and negative last.
- Charge the battery in an open, well-ventilated area, away from sparks and flames. Unplug the charger before connecting or disconnecting the battery. Wear protective clothing and use insulated tools.

Checking the Battery Charge

Allowing batteries to stand for an extended period of time without recharging them will result in reduced performance and service life. To preserve optimum battery performance and life, recharge batteries in storage when the open circuit voltage drops to 12.4 volts.

Note: To prevent damage due to freezing, battery should be fully charged before putting away for winter storage.

Charge batteries in an open well ventilated area, away from spark and flames. Unplug charger before connecting or disconnecting from battery. Wear protective clothing and use insulated tools.

⚠ DANGER

Charging or jump starting the battery may produce explosive gases. Battery gases can explode causing serious injury.

- **Keep sparks, flames, or cigarettes away from battery.**
- **Ventilate when charging or using battery in an enclosed space.**
- **Make sure venting path of battery is always open once battery is filled with acid.**
- **Always shield eyes and face from battery.**

⚠ DANGER

Battery electrolyte contains sulfuric acid, which is poisonous and can cause severe burns. Swallowing electrolyte can be fatal or if it touches skin can cause severe burns.

- **Wear safety glasses to shield eyes, and rubber gloves to protect skin and clothing when handling electrolyte.**
- **Do not swallow electrolyte.**
- **In the event of an accident, flush with water and call a doctor immediately.**

⚠ CAUTION

If the ignition is in the ON position there is potential for sparks and engagement of components. Sparks could cause an explosion or moving parts could accidentally engage causing personal injury.

Be sure ignition switch is in the OFF position before charging the battery.

Check the voltage of the battery with a digital voltmeter or with the message display When the ignition is set to the accessory mode, the module will display the battery voltage. If the voltage is less than 12.4 volts, the battery may need to be charged.

Important: **Make sure the negative battery cable is disconnected and the battery charger used for charging the battery should have an output of 16 volts and 7 amps or less to avoid damaging the battery (see chart for recommended charger settings).**

Voltage Reading	Percent Charge	Maximum Charger Settings	Charging Interval
12.6 or greater	100%	16 volts/7 amps	No Charging Required
12.4 – 12.6	75–100%	16 volts/7 amps	30 Minutes
12.2 – 12.4	50–75%	16 volts/7 amps	1 Hour
12.0–12.2	25–50%	14.4 volts/4 amps	2 Hours
11.7–12.0	0–25%	14.4 volts/4 amps	3 Hours
11.7 or less	0%	14.4 volts/2 amps	6 Hours or More

Recommended Jump Starting Procedure

1. Check the weak battery for terminal corrosion (white, green, or blue “snow”), it must be cleaned off prior to jump starting. Clean and tighten the connections as necessary.

   ⚠ CAUTION

   Corrosion or loose connections can cause unwanted electrical voltage spikes at anytime during the jump starting procedure.

   Do not attempt to jump start with loose or corroded battery terminals or damage to the engine may occur.

   ⚠ DANGER

   Jump starting a weak battery that is cracked, frozen, has low electrolyte level, or an open/shorted battery cell, can cause an explosion resulting in serious personal injury.

   Do not jump start a weak battery if these conditions exist.

2. Make sure the booster is a good and fully charged lead acid battery at 12.6 volts or greater. Use properly sized jumper cables (4 to 6 AWG) with short lengths to reduce voltage drop between systems. Make sure the cables are color coded or labeled for the correct polarity.

   ⚠ CAUTION

   Connecting the jumper cables incorrectly (wrong polarity) can immediately damage the electrical system.

   Be certain of battery terminal polarity and jumper cable polarity when hooking up batteries.

   Note: The following instructions are adapted from the SAE J1494 Rev. Dec. 2001 – Battery Booster Cables – Surface Vehicle Recommended Practice (SAE – Society of Automotive Engineers).

   ⚠ WARNING

   Batteries contain acid and produce explosive gases.

   - **Shield the eyes and face from the batteries at all times.**
   - **Do not lean over the batteries.**

   Note: Be sure the vent caps are tight and level. Place a damp cloth, if available, over any vent caps on both batteries. Be sure the vehicles do not touch and that both electrical systems are off and at the same rated system voltage. These instructions are for negative ground systems only.

3. Connect the positive (+) cable to the positive (+) terminal of the discharged battery that is wired to the starter or solenoid.

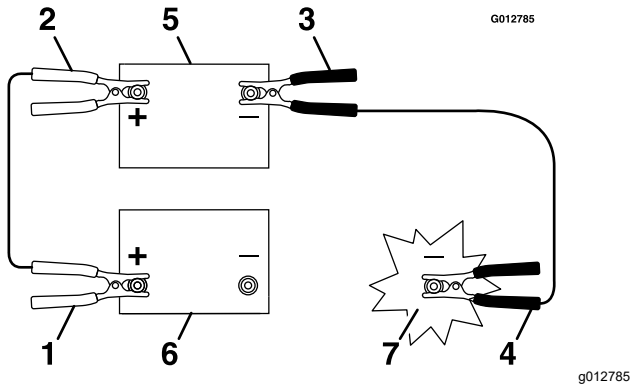

Figure 20

1. Positive (+) cable on discharged battery
2. Positive (+) cable on booster battery
3. Negative (–) cable on the booster battery
4. Negative (–) cable on the engine block
5. Booster battery
6. Discharged battery
7. Engine block

4. Connect the other end of the positive cable to the positive terminal of the booster battery.
5. Connect the black negative (–) cable to the other terminal (negative) of the booster battery.
6. Make the final connection on the engine block of the stalled vehicle (no to the negative post) away from the battery. Stand back.
7. Start the vehicle and remove the cables in the reverse order of connection (the engine block (black) connection is the first to disconnect).

Drive System Maintenance

Checking the Tire Pressures

Service Interval: Every 50 hours

1. Park the machine on a level surface, disengage the PTO, and engage the parking brake.
2. Shut off the engine, remove the key, and wait for all moving parts to stop before leaving the operating position.
3. Check the tire pressure in drive tires.
4. Inflate the drive tires to 83 to 97 kPa (12 to 14 psi).
5. Semi-pneumatic caster tires do not need to be inflated.

Wheel Hub Nut Torque Specification

Service Interval: After the first 100 hours

Every 500 hours thereafter

Check and torque the nut on the wheel motor tapered shaft to 156 to 183 N·m (115 to 135 ft-lb).

Note: Do **not** use anti-seize compound on the wheel hub.

Brake Maintenance

Adjusting the Parking Brake

If the parking brake does not hold securely, an adjustment is required.

1. Park the machine on a level surface, disengage the PTO, and engage the parking brake.
2. Shut off the engine, remove the key, and wait for all moving parts to stop before leaving the operating position.
3. When the park brake is released, the brake bars should lift off the tires and the hand lever should travel forward. When the brake is disengaged, the gap between the brake snubber teeth and drive tire should measure 16 to 19 mm (5/8 to 3/4 inch) (Figure 21).

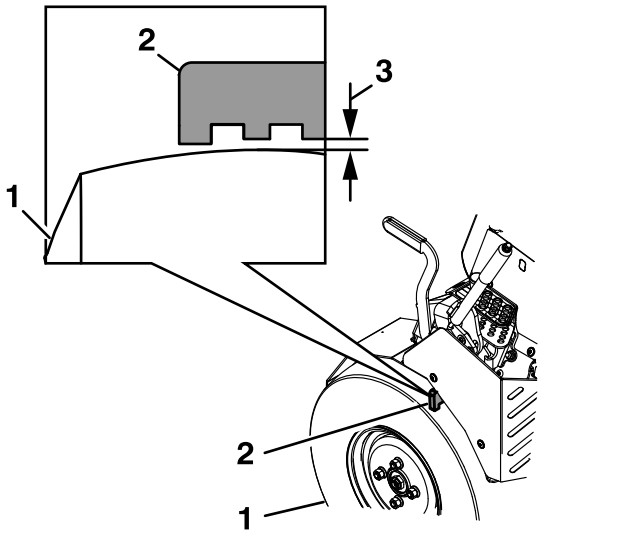

g464208

Figure 21

1. Tire
2. Brake shaft arm
3. 16 to 19 mm (5/8 to 3/4 inch)

4. If the parking brake does not hold securely, an adjustment is required.
5. Remove and retain the rear guard.
6. To adjust the brake, loosen the jam nut at the lower end of the ball joint. and retain the hairpin and washer on the brake linkage rod. Turn the 2 jam nuts on the brake linkage rod until the distance between the 2 ball joints is reached as shown in Figure 22. Turn the brake linkage rod clockwise to decrease the distance and counterclockwise to increase the distance.

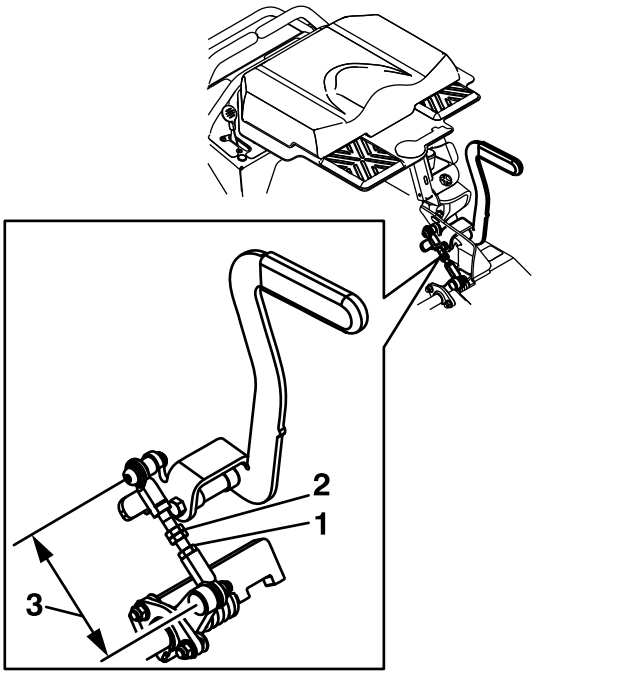

g446598

Figure 22

1. Lower jam nut
2. 2 jam nuts
3. 12.5–12.8 cm (4.94–5.06 inches)

7. Tighten the jam nut at the lower end of the ball joint.
8. Install the rear guard.

Belt Maintenance

Checking the Belts

Service Interval: Every 50 hours

1. Park the machine on a level surface, disengage the PTO, and engage the parking brake.
2. Shut off the engine, remove the key, and wait for all moving parts to stop before leaving the operating position.
3. Look on the top side of the cutting deck to check the mower blade drive belt condition.
4. Look under the engine deck to check the pump drive belt condition.
5. Check all idler arms to ensure they pivot freely.

Pump Drive Belt Tension

Self-tensioning - No adjustment necessary.

Mower Deck Drive Belt Tension

Self-tensioning - No adjustment necessary.

Controls System Maintenance

Adjusting the Motion-Control Handle Position

If the motion control levers do not align horizontally, adjust one or both levers.

Note: Adjust the horizontal alignment before the front to back alignment.

1. Park the machine on a level surface, disengage the PTO, and engage the parking brake.
2. Shut off the engine, remove the key, and wait for all moving parts to stop before leaving the operating position.
3. Push the right motion control lever down out of the PTO disengage position.
4. Check if the right motion control lever aligns horizontally with the left motion control lever.

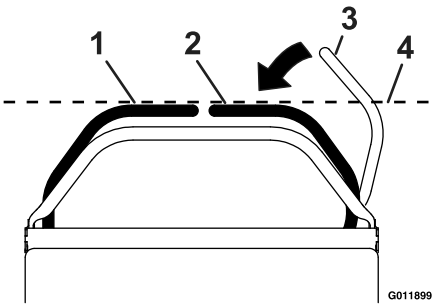

g012878

Figure 23

1. Left motion control lever
2. Right motion control lever
3. Right motion control lever in PTO disengage position
4. Check the horizontal alignment here

5. To adjust the right motion control lever horizontally, the cam needs to be adjusted.
6. Release the cushion from the rear of the machine.
7. Loosen the nut holding the cam.

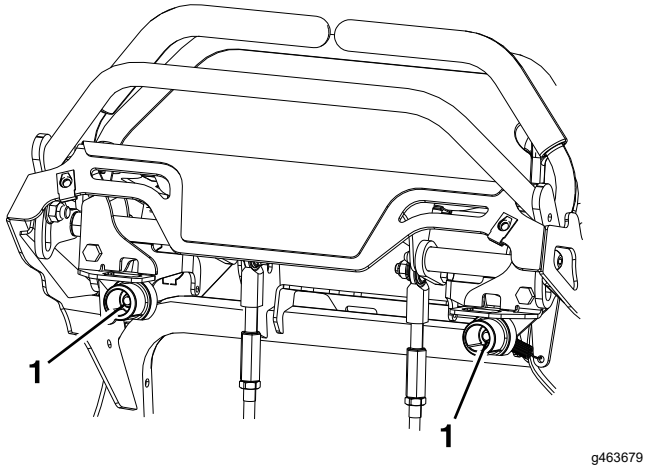

Figure 24

1. Cam nut

8. Adjust the cam until it aligns with the left motion control lever and tighten the nut for the cam.

   Note: Moving the flat portion of the cam clockwise lowers the handle, while moving it counterclockwise raises the handle

   Important: **Make sure the flat portion of the cam does not go above a vertical position (right or left), or damage may occur to the switch.**

9. Tighten the switch screws.

Adjusting Motion-Control Tracking

Located in the front inside the tower. Rotating the pump linkage with a wrench (9/16 inch) allows fine tuning adjustments so that the machine does not move in neutral. Any adjustments should be made for neutral positioning only.

1. Raise the rear of machine up and support with jack stands (or equivalent support) just high enough to allow drive wheels to turn freely.
2. Start the engine. The brake must be engaged and motion control levers out to start engine. Run the engine at full throttle and release the brake.
3. Run the unit at least 5 minutes with the drive levers at full forward speed to bring hydraulic oil up to operating temperature.

   Note: The motion control lever needs to be in neutral while making any necessary adjustments.

4. Bring the motion control levers into the neutral position. Access the links from the front of the tower. Adjust the pump control rod lengths by loosening the lower and middle nuts on each and rotating the turn buckle until the wheels slightly creep in reverse. The pumps have a return to neutral arms and will return to neutral when the control levers are released. If the levers do not fold out, adjust the links until the lever folds out in the middle of the neutral lock notch. Move the levers to the full forward and reverse. If the levers fold out, tighten the lower and middle jam nuts on the links, followed by the upper jam nut last.

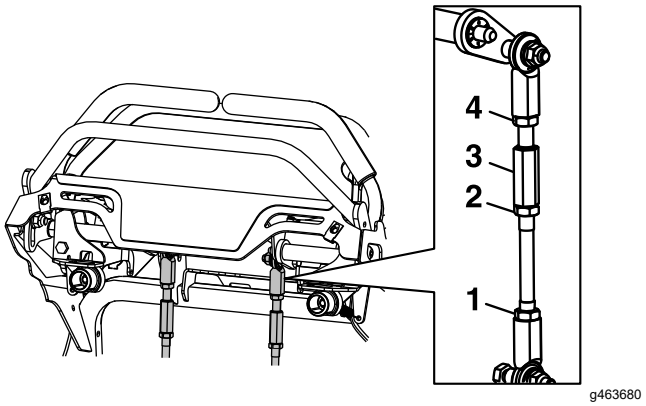

Figure 25

1. Lower jam nut
2. Middle jam nut
3. Links
4. Upper jam nut

5. Shut off the machine.
6. Remove the jack stands.
7. Check that the machine does not creep in neutral with the park brakes disengaged.

Hydraulic System Maintenance

Hydraulic System Safety

- Seek immediate medical attention if fluid is injected into skin. Injected fluid must be surgically removed within a few hours by a doctor.
- Ensure that all hydraulic-fluid hoses and lines are in good condition and all hydraulic connections and fittings are tight before applying pressure to the hydraulic system.
- Keep your body and hands away from pinhole leaks or nozzles that eject high-pressure hydraulic fluid.
- Use cardboard or paper to find hydraulic leaks.
- Safely relieve all pressure in the hydraulic system before performing any work on the hydraulic system.

Hydraulic System Specifications

Hydraulic Fluid Type: Toro® HYPR-OIL™ 500 hydraulic fluid

Hydraulic System Fluid Capacity: 2.2 L (74.39 fl oz)

Important: **Use the fluid specified. Other fluids could damage the system.**

Checking the Hydraulic Oil Level

Service Interval: Every 50 hours

1. Park the machine on a level surface, disengage the PTO, and engage the parking brake.
2. Shut off the engine, remove the key, and wait for all moving parts to stop before leaving the operating position.
3. Lift and lock the thigh pad.
4. Clean area around hydraulic reservoir cap and remove cap. Oil level should be to in the cross hatch on the dipstick when cold. If not, add oil. Replace hydraulic reservoir cap and tighten until snug. Do not overtighten.
5. Wipe the dipstick clean and re-insert the cap into the hydraulic tank. Lightly tighten the cap.
6. Remove the cap again and check the level of the oil on the dipstick. See Figure 26 for oil levels.

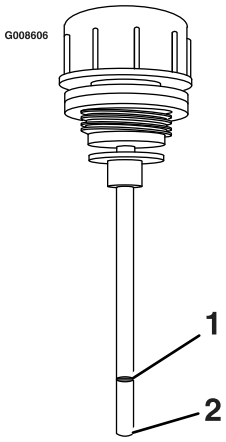

Figure 26

1. Full
2. Add

Note: The oil level on the dipstick will be incorrect if the oil is checked when the unit is hot.

7. If the dipstick oil level does not register on the dipstick, add hydraulic oil. **Do not overfill.**
8. Install hydraulic reservoir cap and tighten until snug. **Do not overtighten.**
9. Lower the thigh pad.

Replacing the Hydraulic Fluid and Filters

Service Interval: After the first 250 hours

Every 500 hours/Yearly (whichever comes first) thereafter.
(Every 250 hours/Yearly if using Mobil 1 15W50 thereafter)

Change the hydraulic fluid more frequently in severe conditions or in a hot operating climate. Contact your Authorized Service Dealer for a hydraulic kit to replace the hydraulic filters.

⚠ WARNING

Hot hydraulic fluid can cause severe burns.

Allow the hydraulic fluid to cool before performing any maintenance on the hydraulic system.

1. Park the machine on a level surface, disengage the PTO, and engage the parking brake.
2. Shut off the engine, remove the key, and wait for all moving parts to stop before leaving the operating position.
3. Remove the right side guard.

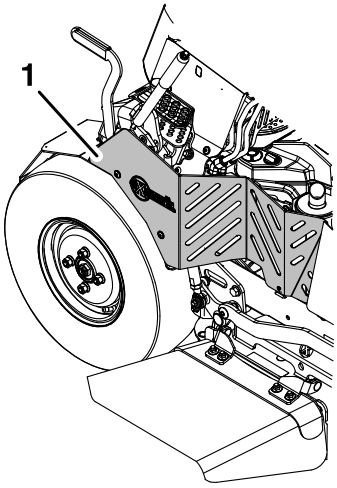

g446593

Figure 27

1. Right side guard

4. Place a catch pan under the hydraulic filter.
5. Carefully clean the area around filter. It is important that no dirt or contamination enters hydraulic system.
6. Unscrew the filter to remove and allow the oil to drain from the reservoir.

   Important: **Before reinstalling new filter, fill it with Toro Hypr-Oil 500 and apply a thin coat of oil on the surface of the rubber seal.**

   Turn the filter clockwise until the rubber seal contacts the filter adapter, then tighten the filter an additional 2/3 to 3/4 turn.
7. Fill the reservoir as stated in Checking the Hydraulic Oil Level (page 35)

   Toro Hypr-Oil 500 is recommended. Refer to the chart for an acceptable alternative:

Hydro Oil	Service Interval
Toro Hypr-Oil 500 (Preferred)	After first 250 hours *Every 500 hours/Yearly thereafter
Mobil 1 15W50	After first 250 hours *Every 250 hours/Yearly thereafter

   *May need more often under severe conditions.
8. Loosen the filter 1/2 turn and allow a small amount of oil to leak from the oil filter (this allows air to be purged from the oil filter and supply hose from the hydraulic reservoir). Turn the filter clockwise until the rubber seal contacts the filter adapter. Then tighten the filter an additional 2/3 to 3/4 turn.
9. Raise the rear of machine up and support with jack stands (or equivalent support) just high enough to allow drive wheels to turn freely.

⚠ CAUTION

Raising the mower for service or maintenance relying solely on mechanical or hydraulic jacks could be dangerous. The mechanical or hydraulic jacks may not be enough support or may malfunction allowing the unit to fall, which could cause injury.

Do not rely solely on mechanical or hydraulic jacks for support. Use adequate jack stands or equivalent support.

10. Start the engine and move the throttle control ahead to the full throttle position. Move the motion control levers inward (together) and move both levers forward with equal pressure, and run for one minute. Shut down the machine, allow the hydraulic components to cool and recheck the oil level.

    If either drive wheel does not rotate, one or both of the charge pumps (located on the top of the main pump as shown in Figure 28) may have lost their “prime”. Refer to Hydraulic System Air Purge (page 36)
11. Install the right side guard.
12. Remove the jack stands.

Note: Do not change the hydraulic system oil (except for what can be drained when changing filter), unless it is felt the oil has been contaminated or been extremely hot.

Changing oil unnecessarily could damage hydraulic system by introducing contaminates into the system.

Hydraulic System Air Purge

Air must be purged from the hydraulic system when any hydraulic components, including oil filter, are removed or any of the hydraulic lines are disconnected.

The critical area for purging air from the hydraulic system is between the oil reservoir and each charge pump located on the top of each variable displacement pump (Figure 28). Air in other parts of the hydraulic system will be purged through normal operation once the charge pump is “primed”.

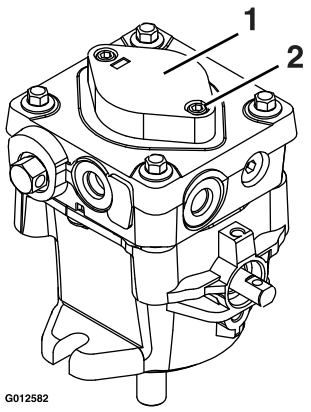

g012852

Figure 28

1. Charge pump cap
2. Loosen 1-1/2 turns only

1. Stop the engine and wait for all moving parts to stop. Raise the rear of the machine up onto jack stands high enough to raise the drive wheels off the ground.
2. Check oil level. Refer to Checking the Hydraulic Oil Level (page 35).
3. Start the engine and move throttle control ahead to full throttle position. Move the motion control levers inward (together) and move both levers forward with equal pressure.

   If either drive wheel does not rotate, it is possible to assist the purging of the charge pump by carefully rotating the tire in the forward position.

   Note: It is necessary to lightly touch the charge pump cap with your hand to check the pump temperature. If the cap is too hot to touch, turn off the engine. The pumps may be damaged if the pump becomes too hot.

   If either drive wheel still does not rotate continue with step .
4. Thoroughly clean the area around each of the charge pump housings.
5. To “prime” charge pump, loosen two hex socket head capscrews (shown in) **1-1/2 turns only. Make sure the engine is not running.** Lift the charge pump housing upward and wait for a steady flow of oil to flow out from under the housing. Retighten the capscrews. Do this for both pumps.

   Note: The hydraulic reservoir can be pressurized up to 5 psi to speed this process.
6. If either drive wheel still does not rotate, stop and repeat steps and above for the respective pump. If wheels rotate slowly, the system may prime after additional running. Check oil level as stated in Checking the Hydraulic Oil Level (page 35) section.
7. Allow unit to run several minutes after the charge pumps are “primed” with drive system in the full speed position. Check oil level as stated in Checking the Hydraulic Oil Level (page 35) section.

Mower Deck Maintenance

Blade Safety

A worn or damaged blade can break, and a piece of the blade could be thrown toward you or bystanders, resulting in serious personal injury or death.

- Inspect the blades periodically for wear or damage.
- Use care when checking the blades. Wrap the blades or wear gloves, and use caution when servicing the blades. Only replace or sharpen the blades; never straighten or weld them.
- Always inspect the machine to ensure that the blades and blade bolts are not worn or damaged. Replace worn or damaged blades and bolts in sets to preserve balance.
- On multi-bladed machines, take care as rotating 1 blade can cause other blades to rotate.

Checking the Mower Blades

1. Park the machine on a level surface, disengage the PTO, and engage the parking brake.
2. Shut off the engine, remove the key, and disconnect the spark-plug wires from the spark plugs.
3. Lift the deck and secure it in raised position as stated in the Clean Grass Build-Up Under Deck (page 42) section.
4. Inspect the blades and sharpen or replace as required.
5. Reinstall the blades (if they were removed) in the following order:
   A. Install the bushing through blade with the bushing flange on bottom (grass) side of blade.

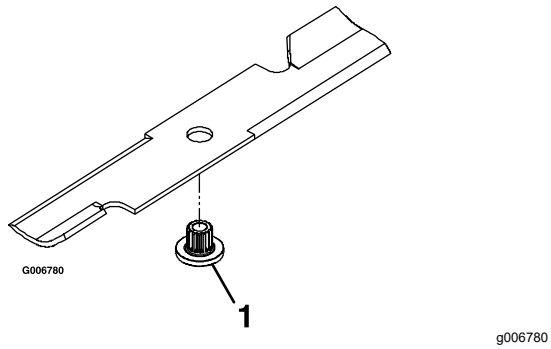

Figure 29

1. Install bushing in blade prior to installing bushing in spindle.

   B. Install the bushing/blade assembly into the spindle.

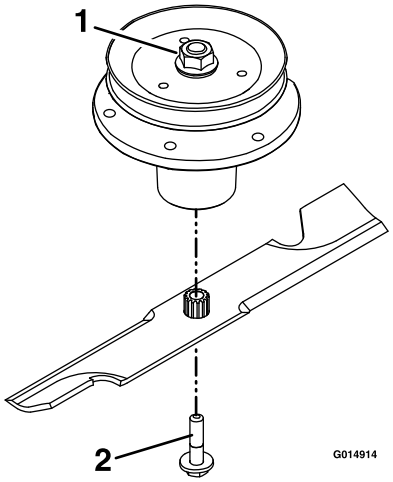

Figure 30

1. Use wrench here for blade installation. This nut has been torqued to 176 to 217 N·m (130 to 160 ft-lb)
2. Torque to 68 to 81 N·m (50 to 60 ft-lb) Apply lubricant to threads as needed to prevent seizing. Copper-based anti-seize preferable. Grease acceptable substitute.

   C. Apply lubricant to the threads of the blade bolt as needed to prevent seizing. Copper-based anti-seize is preferable. Grease is an acceptable substitute. Install the blade bolt finger tight. Place wrench on the top spindle nut then torque the blade bolts to 68 to 81 N·m (50 to 60 ft-lb).

⚠ WARNING

Incorrect installation of the blade or components used to retain the blade can be dangerous. Failure to use all original components and assembled as shown could allow a blade or blade component to be thrown out from under the deck resulting in serious personal injury or death.

Always install the original Toro blades, blade bushings, and blade bolts as shown.

Leveling the Mower Deck

Note: Small adjustments can be accomplished by increasing the tire pressure in the tire on the low side.

1. Park the machine on a level surface, disengage the PTO, and engage the parking brake.
2. Shut off the engine, remove the key, and disconnect the spark-plug wires from the spark plugs.
3. Check the tire pressure in drive tires and pneumatic front caster tires (if equipped). Proper

inflation pressure for tires is 90 kPa (13 psi). Adjust if necessary.

4. Pull the deck lift handle all the way rearward to latch the cutting deck into the raised transport position.
5. Insert the height adjustment pin into the 7.6 cm (3 inches) cutting height location.
6. Release the transport lock and allow the deck to lower to the cutting height.
7. Raise the discharge deflector.
8. Carefully rotate the blades front to rear. Measure from the level surface to the front tip of the center blade. The measurement should read 7.6 cm (3 inches).

   Note: In most conditions, the back tips on the side blades should be adjusted 3.2 to 6.4 mm (1/8 to 1/4 inch) higher than the front.

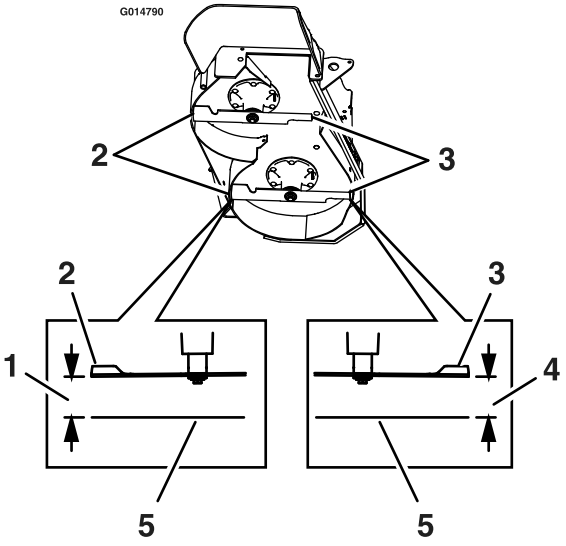

Figure 31

1. 7.9 to 8.3 cm (3-1/8 to 3-1/4 inches)
2. Back blade tip
3. Front blade tip
4. 7.6 cm (3 inches)
5. Level surface

9. Raise the deck to transport position.
10. Slowly loosen the adjusting screw on the lift assist spring until the screw can be removed (Figure 32). Save the screw for reinstallation.

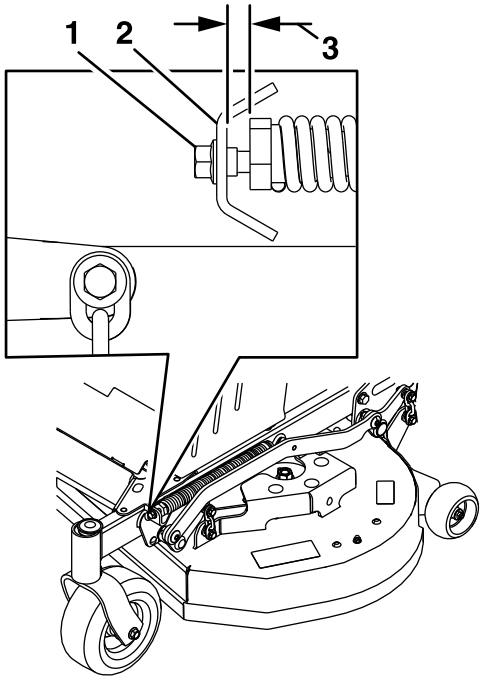

Figure 32

1. Adjusting screw
2. Bracket
3. Gap

11. Set the height of the cut lever to the 7.6 cm (3 inches) position. Place a 6.7 cm (2-5/8 inches) tall block under the front deck skirt and a 7.0 to 7.3 cm (2-3/4 to 2-7/8 inches) block under the rear skirt.
12. Loosen the hardware at the bottom of all four lift chains so the deck is sitting securely on the blocks (Figure 33). Make sure the slack is removed from the lift chains and retighten the hardware.

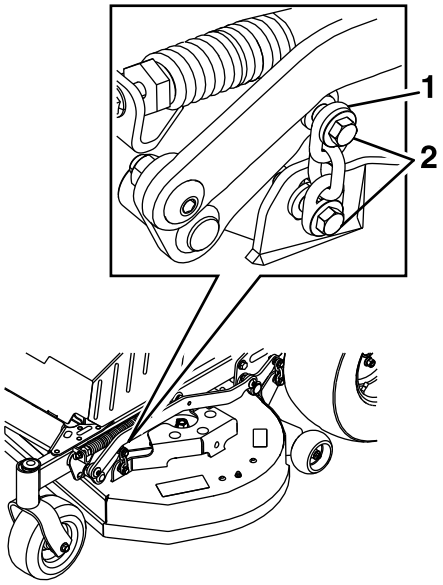

g313831

Figure 33

1. Chain
2. Leveling adjust locking nuts

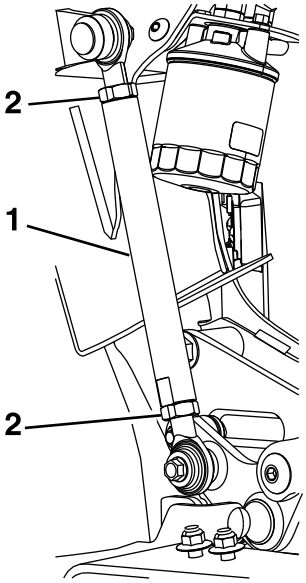

g313832

Figure 34

1. Deck lift rod
2. Jam nut

13. Raise the deck and remove the blocks. Lower the deck back to 7.6 cm (3 inches) and recheck the cutting height.
14. Raise the deck into the transport position and reinstall the deck lift assist spring. Tighten the adjuster screw until a 6.0 to 6.4 cm (2-3/8 to 2-1/2 inches) gap is present (Figure 33).

    Note: If the front to rear blade tip height difference is good, but the height is off, additional adjustments can be made using the lift rod.
15. Loosen both of the jam nuts on the lift rod and rotate the rod to raise or lower the deck. Tighten the jam nuts when desired position is achieved (Figure 34).

Maintaining the Chassis

Checking for Loose Hardware

Service Interval: Before each use or daily

1. Park the machine on a level surface, disengage the PTO, and engage the parking brake.
2. Shut off the engine, remove the key, and wait for all moving parts to stop before leaving the operating position.
3. Visually inspect the machine for any loose hardware or any other possible problem. Tighten the hardware or correct the problem before operating.

Cleaning

Cleaning and Storing Safety

- Park machine on level ground, disengage drives, set parking brake, stop engine, remove key, and disconnect spark plug wire. Wait for all moving parts to stop before leaving the operator's position. Allow the machine to cool before servicing, adjusting, fueling, cleaning, or storing.
- Clean grass and debris from the cutting unit, muffler, drives, grass catcher, and engine compartment to prevent fires.
- Allow the machine to cool before storing the machine in any enclosure. Do not store the machine or fuel container, or refuel, where there is an open flame, spark, or pilot light such as on a water heater or other appliance.

Clean Debris From Machine

Service Interval: Before each use or daily

1. Stop engine, wait for all moving parts to stop, and remove key. Engage parking brake.
2. Clean off any oil, debris, or grass build-up on the machine and cutting deck, especially under deck belt shields, around the fuel tank, around engine and exhaust area.

   Important: **You can wash the machine with mild detergent and water. Do not pressure wash the machine. Avoid excessive use of water, especially near the control panel, around the engine, hydraulic pumps, and motors.**

Clean Engine and Exhaust System Area

Service Interval: Before each use or daily (May be required more often in dry or dirty conditions.)

⚠ CAUTION

Excessive debris around engine cooling air intake and exhaust system area can cause engine, exhaust area, and hydraulic system to overheat which can create a fire hazard.

Clean all debris from engine and exhaust system area.

1. Stop engine, wait for all moving parts to stop, and remove key. Engage parking brake.

2. Clean all debris from rotating engine air intake screen, around engine shrouding, and exhaust system area.
3. Wipe up any excessive grease or oil around the engine and exhaust system area.
4. Clean oil coolers (if equipped) of all debris, dirt, and oil.

Remove Engine Shroud Access Panels and Clean Cooling Fins

Service Interval: Every 80 hours

1. Stop engine, wait for all moving parts to stop, and remove key. Engage parking brake.
2. Remove cooling shroud access panels from engine and clean cooling fins. Also clean dust, dirt, and oil from external surfaces of engine which can cause improper cooling.
3. Make sure cooling shroud access panels are properly reinstalled. Operating the engine without cooling shroud access panels will cause engine damage due to overheating.

Clean Grass Build-Up Under Deck

Service Interval: Before each use or daily

1. Stop engine, wait for all moving parts to stop, and remove key. Engage parking brake.
2. Raise deck to the transport (maximum cutting height) position. Lift the front of unit and support machine using jack stands or equivalent support.
3. Clean out any grass build-up from underside of deck and in discharge deflector.

Waste Disposal

Motor Oil Disposal

Engine oil and hydraulic oil are both pollutants to the environment. Dispose of used oil at a certified recycling center or according to your state and local regulations.

Battery Disposal

⚠ DANGER

Battery electrolyte contains sulfuric acid, which is poisonous and can cause severe burns. Swallowing electrolyte can be fatal or if it touches skin can cause severe burns.

- **Wear safety glasses to shield eyes, and rubber gloves to protect skin and clothing when handling electrolyte.**
- **Do Not swallow electrolyte.**
- **In the event of an accident, flush with water and call a doctor immediately.**

Federal law states that batteries should not be placed in the garbage. Management and disposal practices must be within relevant federal, state, or local laws.

If a battery is being replaced or if the unit containing the battery is no longer operating and is being scrapped, take the battery to a local certified recycling center. If no local recycling is available return the battery to any certified battery reseller.

Troubleshooting

Important: **It is essential that all operator safety mechanisms be connected and in proper operating condition prior to mower use.**

When a problem occurs, do not overlook the simple causes. For example: starting problems could be caused by an empty fuel tank.

The following table lists some of the common causes of trouble. Do not attempt to service or replace major items or any items that call for special timing of adjustments procedures (such as valves, governor, etc.). Have this work done by your **Engine Service Dealer**.

Note: When disconnecting electrical connectors do not pull on the wires to separate the connectors.

Problem	Possible Cause	Corrective Action
Starter does not crank.	1. PTO is engaged.	1. Disengage the PTO.
	2. One of the speed control levers are not in neutral position.	2. Ensure the speed control lever is in the neutral position.
	3. Battery does not have a full charge.	3. Charge the battery. See and sections in Maintenance.
	4. Electrical connections are corroded, loose or faulty.	4. Check the electrical connections for good contact. Clean connector terminals thoroughly with electrical contact cleaner, apply dielectric grease and reconnect.
	5. Fuse is blown.	5. Replace the blown fuse.
	6. Neutral LCD indicator does not illuminate.	6. Check reed switch.
	7. Relay or switch is defective.	7. Contact an Authorized Service Dealer.
Engine will not start, starts hard, or fails to keep running	1. Fuel tank is empty.	1. Fill the fuel tank.
	2. Fuel shutoff valve is closed.	2. Open the fuel shutoff valve.
	3. The throttle and choke are not in the correct position.	3. Be sure the throttle control is midway between the SLOW and FAST positions, and the choke is in the ON position for a cold engine or the OFF position for a warm engine.
	4. Dirt in fuel filter.	4. Replace the fuel filter.
	5. Dirt, water, or stale fuel is in the fuel system.	5. Contact an Authorized Service Dealer.
	6. Air cleaner is dirty.	6. Clean or replace the air cleaner element.
	7. Electrical connections are corroded, loose or faulty.	7. Check the electrical connections for good contact. Clean connector terminals thoroughly with electrical contact cleaner, apply dielectric grease and reconnect.
	8. Relay or switch is defective.	8. Contact an Authorized Service Dealer.
	9. Faulty spark plug.	9. Clean, adjust or replace spark plug.
	10. Spark plug wire is not connected.	10. Check the spark plug wire connection.
Engine loses power	1. Engine load is excessive	1. Reduce the ground speed.
	2. Air cleaner is dirty.	2. Clean or replace the air cleaner element.
	3. Oil level in the crankcase is low.	3. Add oil to the crankcase.
	4. Cooling fins and air passages for the engine are plugged.	4. Remove the obstructions from the cooling fins and air passages.
	5. Vent system filter plugged.	5. Inspect vent filter; replace if dirty.
	6. Dirt in fuel filter.	6. Replace the fuel filter.
	7. Dirt, water, or stale fuel is in the fuel system.	7. Contact an Authorized Service Dealer.

Problem	Possible Cause	Corrective Action
Engine overheats	1. Engine load is excessive 2. Oil level in the crankcase is low. 3. Cooling fins and air passages for the engine are plugged.	1. Reduce the ground speed. 2. Add oil to the crankcase. 3. Remove the obstructions from the cooling fins and air passages.
Mower pulls left or right (with levers fully forward).	1. Tire pressure in drive tires not correct. 2. Tracking needs adjustment.	1. Adjust tire pressure in the drive tires. 2. Adjust the tracking by turning turnbuckle on the left turnbuckle in the direction that the mower needs to be adjusted to. Rotate the turnbuckle in 1/4 turn increments until the mower tracks correctly.
Machine does not drive.	1. Bypass valve is not closed tight. 2. Drive or pump belt is worn, loose or broken. 3. Drive or pump belt is off a pulley.	1. Tighten the bypass valve. 2. Change the belt. 3. Change the belt.
Uneven cutting height.	1. Blade(s) not sharp. 2. Cutting blade(s) is/are bent. 3. Mower deck is not level. 4. Underside of mower is dirty. 5. Tire pressure in drive tires not correct. 6. Blade spindle bent. 7. Tips of adjacent blades are at an uneven cutting height. Blades tips should be even within 3/16 inch which is approximately one blade thickness.	1. Sharpen the blade(s). 2. Install new cutting blade(s). 3. Level mower deck from side-to-side and front-to-rear. 4. Clean the underside of the mower. 5. Adjust tire pressure in the drive tires. 6. Contact an Authorized Service Dealer. 7. Replace blades, spindles and (or) check for damage to mower deck.
Abnormal vibration	1. Cutting blade(s) is/are bent or unbalanced. 2. Blade mounting bolt is loose. 3. Engine mounting bolts are loose. 4. Loose engine pulley, idler pulley, or blade pulley. 5. Engine pulley is damaged. 6. Blade spindle is bent. 7. Belt is damaged.	1. Install new cutting blade(s). 2. Tighten the blade mounting bolt. 3. Tighten the engine mounting bolts. 4. Tighten the appropriate pulley. 5. Contact an Authorized Service Dealer. 6. Contact an Authorized Service Dealer. 7. Install new belt.
Blades do not rotate.	1. Drive belt is off pulley. 2. Deck belt is worn, loose or broken. 3. Deck belt is off pulley. 4. Broken or missing idler spring. 5. Damaged electric clutch.	1. Check belt for damage; replace if necessary. Install drive belt and check adjusting shafts and belt guides for correct position. 2. Install new deck belt. 3. Install deck pulley and check the idler pulley, idler arm and spring for correct position and function. 4. Replace the spring. 5. Contact an Authorized Service Dealer.

Problem	Possible Cause	Corrective Action
Clutch will not engage.	1. Fuse is blown.	1. Replace fuse. Check coil resistance, battery charge, charging system, and wiring connections and replace if necessary.
	2. Low voltage supply at the clutch.	2. Check coil resistance, battery charge, charging system, and wiring connections and replace if necessary.
	3. Damaged coil.	3. Replace clutch.
	4. Inadequate current supply.	4. Repair or replace clutch lead wire or electrical system. Clean connector contacts.
	5. Rotor/armature airgap is too large.	5. Remove shim or replace clutch.

Schematics

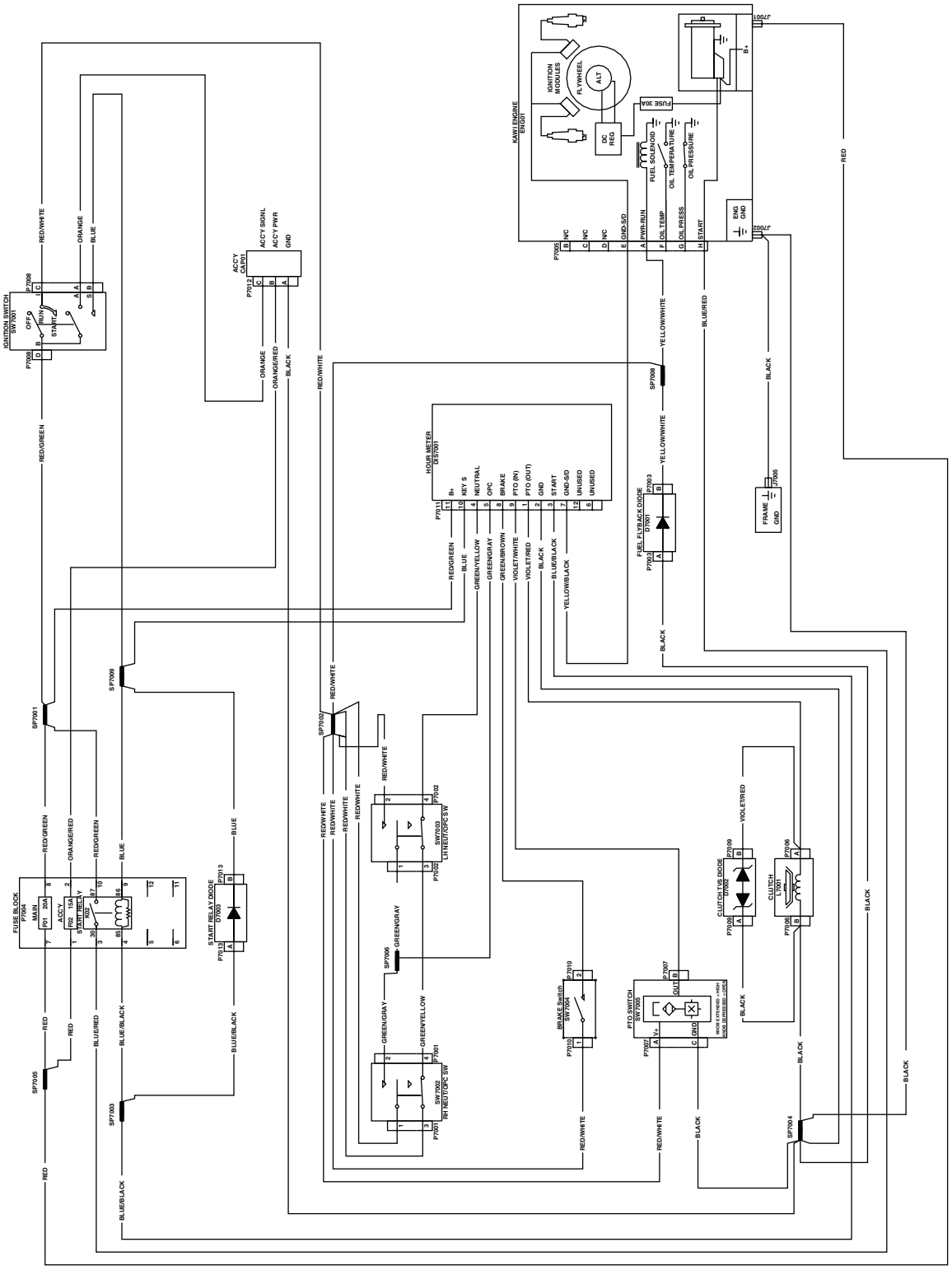

g271561

Electrical Diagram (Rev. A)

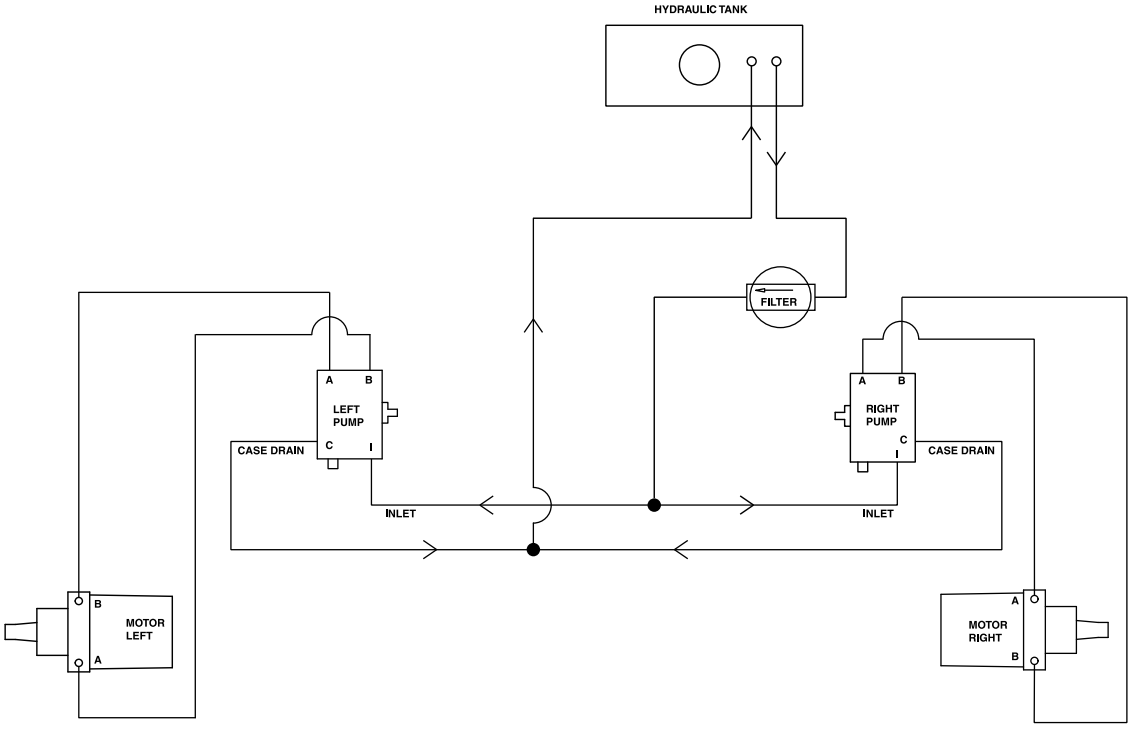

g270319

Hydraulic Diagram (Rev. A)

California Proposition 65 Warning Information

What is this warning?

You may see a product for sale that has a warning label like the following:



WARNING: Cancer and Reproductive Harm—www.p65Warnings.ca.gov.

What is Prop 65?

Prop 65 applies to any company operating in California, selling products in California, or manufacturing products that may be sold in or brought into California. It mandates that the Governor of California maintain and publish a list of chemicals known to cause cancer, birth defects, and/or other reproductive harm. The list, which is updated annually, includes hundreds of chemicals found in many everyday items. The purpose of Prop 65 is to inform the public about exposure to these chemicals.

Prop 65 does not ban the sale of products containing these chemicals but instead requires warnings on any product, product packaging, or literature with the product. Moreover, a Prop 65 warning does not mean that a product is in violation of any product safety standards or requirements. In fact, the California government has clarified that a Prop 65 warning "is not the same as a regulatory decision that a product is 'safe' or 'unsafe.'" Many of these chemicals have been used in everyday products for years without documented harm. For more information, go to https://oag.ca.gov/prop65/faqs-view-all.

A Prop 65 warning means that a company has either (1) evaluated the exposure and has concluded that it exceeds the "no significant risk level"; or (2) has chosen to provide a warning based on its understanding about the presence of a listed chemical without attempting to evaluate the exposure.

Does this law apply everywhere?

Prop 65 warnings are required under California law only. These warnings are seen throughout California in a wide range of settings, including but not limited to restaurants, grocery stores, hotels, schools, and hospitals, and on a wide variety of products. Additionally, some online and mail order retailers provide Prop 65 warnings on their websites or in catalogs.

How do the California warnings compare to federal limits?

Prop 65 standards are often more stringent than federal and international standards. There are various substances that require a Prop 65 warning at levels that are far lower than federal action limits. For example, the Prop 65 standard for warnings for lead is 0.5 µg/day, which is well below the federal and international standards.

Why don't all similar products carry the warning?

- Products sold in California require Prop 65 labelling while similar products sold elsewhere do not.
- A company involved in a Prop 65 lawsuit reaching a settlement may be required to use Prop 65 warnings for its products, but other companies making similar products may have no such requirement.
- The enforcement of Prop 65 is inconsistent.
- Companies may elect not to provide warnings because they conclude that they are not required to do so under Prop 65; a lack of warnings for a product does not mean that the product is free of listed chemicals at similar levels.

Why does Toro include this warning?

Toro has chosen to provide consumers with as much information as possible so that they can make informed decisions about the products they buy and use. Toro provides warnings in certain cases based on its knowledge of the presence of one or more listed chemicals without evaluating the level of exposure, as not all the listed chemicals provide exposure limit requirements. While the exposure from Toro products may be negligible or well within the "no significant risk" range, out of an abundance of caution, Toro has elected to provide the Prop 65 warnings. Moreover, if Toro does not provide these warnings, it could be sued by the State of California or by private parties seeking to enforce Prop 65 and subject to substantial penalties.