Form No. 3376-752 Rev B

TORO®

Count on it.

Parts Catalog

TX 525 Wide Track

Compact Utility Loader

Model No. 22324—Serial No. 313000001 and Up

Register at www.Toro.com.
Original Instructions (EN)

CE

3376-752 B

Ordering Replacement Parts

To order replacement parts, please supply the part number, the quantity, and the description of each part desired.

Understanding Reference Numbers

Each identified part in an illustration has a reference number. The reference number for a part also appears in the parts list, along with other information about the part.

This catalog uses two special reference number formats, one to indicate parts in a service assembly and another to indicate the quantity of a given part in an illustration.

Service Assembly Reference Numbers

Parts in service assemblies have reference numbers in the form a:b. The a represents the reference number of the entire service assembly and the b represents a sequential number unique to each part within the service assembly.

For example, a wheel assembly might be identified by reference number 6, the tire by 6:1, the valve by 6:2, and the wheel by 6:3. When you order the assembly identified by reference number 6, you receive all parts identified by reference numbers 6:1,6:2, and 6:3. However, you may also order any part individually. Reference numbers of this type appear in illustration and in parts lists.

Reference Numbers Indicating Quantity

In an illustration, if a reference number indicates more than one part, the reference number has the form nX y. The n represents the quantity of the part, the X is the multiplication symbol, and the y represents the reference number.

For example, in an illustration, the reference number 2X 37 means that two of the parts identified by reference number 37 are indicated.

Contents

Main Frame and Fuel Tank Assembly 4
Track and Traction Assembly 5
Parking Brake Assembly 6
Loader Tower, Fuel Pump and Drive Assembly 7
Traction Hydraulic Assembly 9
Hydraulic Pump Assembly No. 106-9590 and 106-9591 11
Hydraulic Motor Assembly No. 114-1756 12
Radiator and Air Cleaner Assembly 13
Air Cleaner Assembly No. 117-9989 15
Hydraulic Pump and Filter Assembly 16
Hydraulic Pump Assembly No. 106-9589 18
Control Panel Assembly 19
Traction Control Assembly 21
Principal Hydraulic Assembly 22
Two Spool Valve Assembly No. 106-9307 24
One Spool Valve Assembly No. 104-2831 25
Loader Arm Assembly 26
Loader Arm Hydraulic Assembly 27
Left Hand Hydraulic Lift Cylinder Assembly No. 104-6267 29
Right Hand Hydraulic Lift Cylinder Assembly No. 104-6269 30
Hydraulic Cylinder Assembly No. 105-8370 31
Quick Attach Assembly 32
Electrical System Assembly 33
Grill Assembly 35
Hood Assembly 36
Rear Access Cover Assembly 37
Crankcase Assembly 38
Oil Pan Assembly 39
Cylinder Head Assembly 40
Gear Case and Oil Filter Cartridge Assembly 41
Cylinder Head Cover Assembly 42
Dipstick, Guide and Oil Pump Assembly 43
Main Bearing Case Assembly 44
Cam Shaft and Idle Gear Shaft Assembly 45
Piston and Crankshaft Assembly 46
Flywheel and Fuel Camshaft Assembly 47
Idle Apparatus and Stop Solenoid Assembly 48
Injection Pump and Governor Assembly 49
Speed Control Plate Assembly 50
Nozzle Holder and Glow Plug Assembly 51
Nozzle Holder Assembly 52
Alternator, Pulley and Fuel Pump Cover Assembly 54
Alternator Components Assembly 55
Starter Installation Assembly 56
Starter Components Assembly 57
Oil Switch and Thermometer Assembly 58
Water Flange, Thermostat and Water Pump Assembly 59
Water Pipe Assembly 60
Fan Assembly 61
Valve and Rocker Arm Assembly 62
Inlet Manifold Assembly 63
Exhaust Manifold Assembly 64
Engine Gasket Kits 65
Attachments and Accessories 66

© 2024—The Toro® Company
8111 Lyndale Avenue South
Bloomington, MN 55420

Contact us at www.Toro.com.
Printed in the USA.
All Rights Reserved

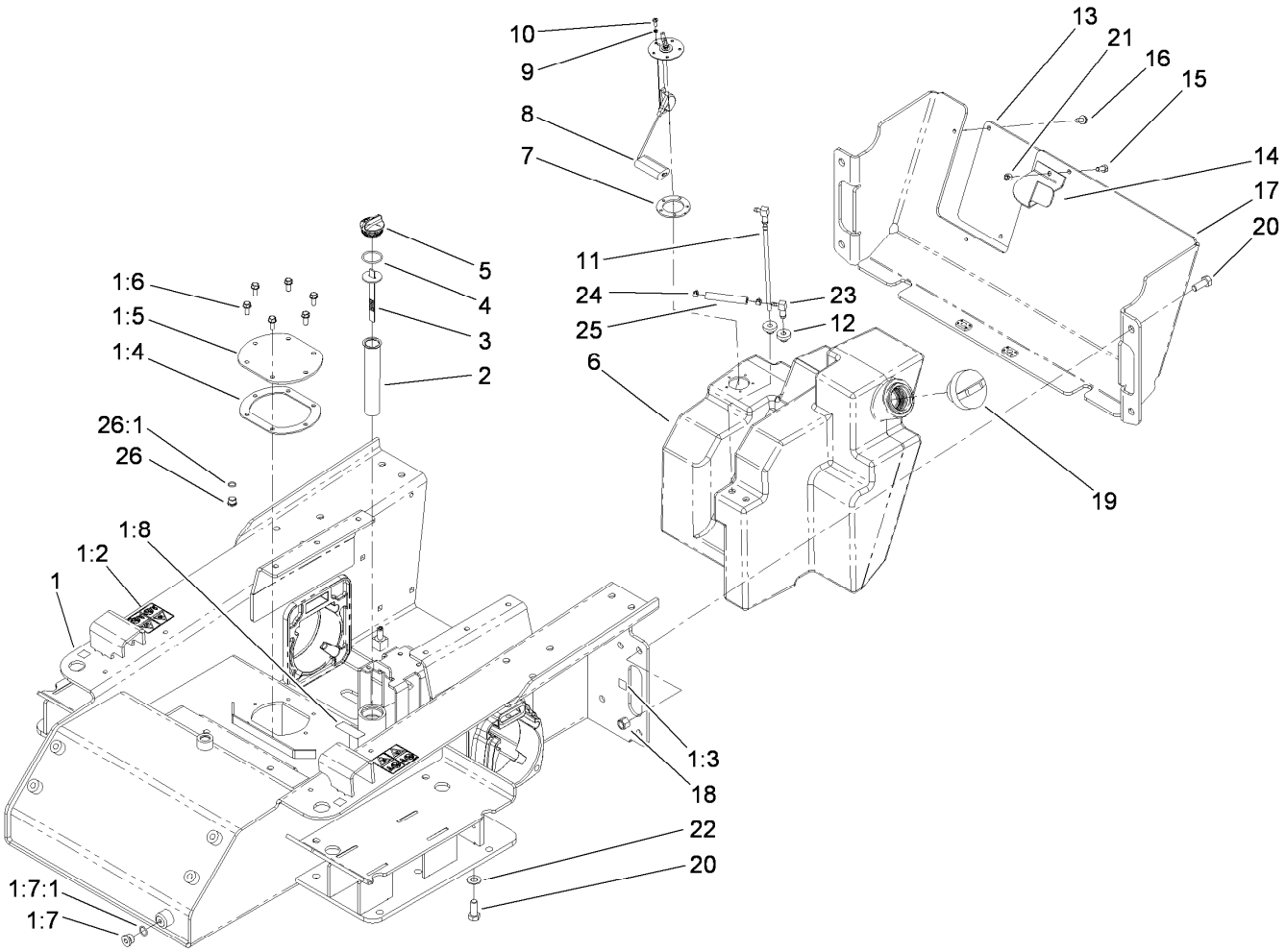

Main Frame and Fuel Tank Assembly

Ref.	Part Number	Qty.	Description
1	115-4832	1	Chassis ASM
1:2	100-4650	2	Decal-Warning
1:3	93-9084	4	Decal-Point, Lift
1:4	107-3557	1	Gasket-Cover, Access
1:5	108-6297-01	1	Cover-Tank
1:6	98-9940	6	Screw-HHF
1:7	353-988	2	Plug-Hex
1:7:1	237-79	1	O-Ring
1:8	93-6686	1	Decal-Oil, HYD
2	61-2790	1	Filter-Screen
3	100-2097	1	Dipstick-Oil
4	237-123	1	O-Ring
5	93-7498	1	Plug-Plastic
6	115-4800	1	Tank-Fuel
7	113372	1	Gasket-Sender, Fuel
8	100-1298	1	Sender-Fuel
9	3253-17	5	Washer-Lock
10	3250-31	5	Screw-PPH

Ref.	Part Number	Qty.	Description
11	98-0185	1	Pipe-Stand
12	46-6560	2	Bushing
13	108-6267-01	1	Panel-Rear
14	108-6273-01	1	Clamp-Tank, Fuel
15	322-3	1	Screw-HH
16	32144-11	3	Screw-HWH
17	114-8911-01	1	Cover-Rear
18	3296-23	4	Nut-Lock, NI
19	107-2172	1	Cap-Diesel
20	325-5	6	Screw-HH
21	3296-29	1	Nut-Lock, NI
22	3256-26	2	Washer-Flat
23	104-5228	1	Fitting-Elbow, 90 DEG
24	2412-80	2	Clamp-Hose
25	108-6344	1	Hose-Fuel
26	353-989	1	Plug-Hex, Hollow
26:1	237-42	1	O-Ring

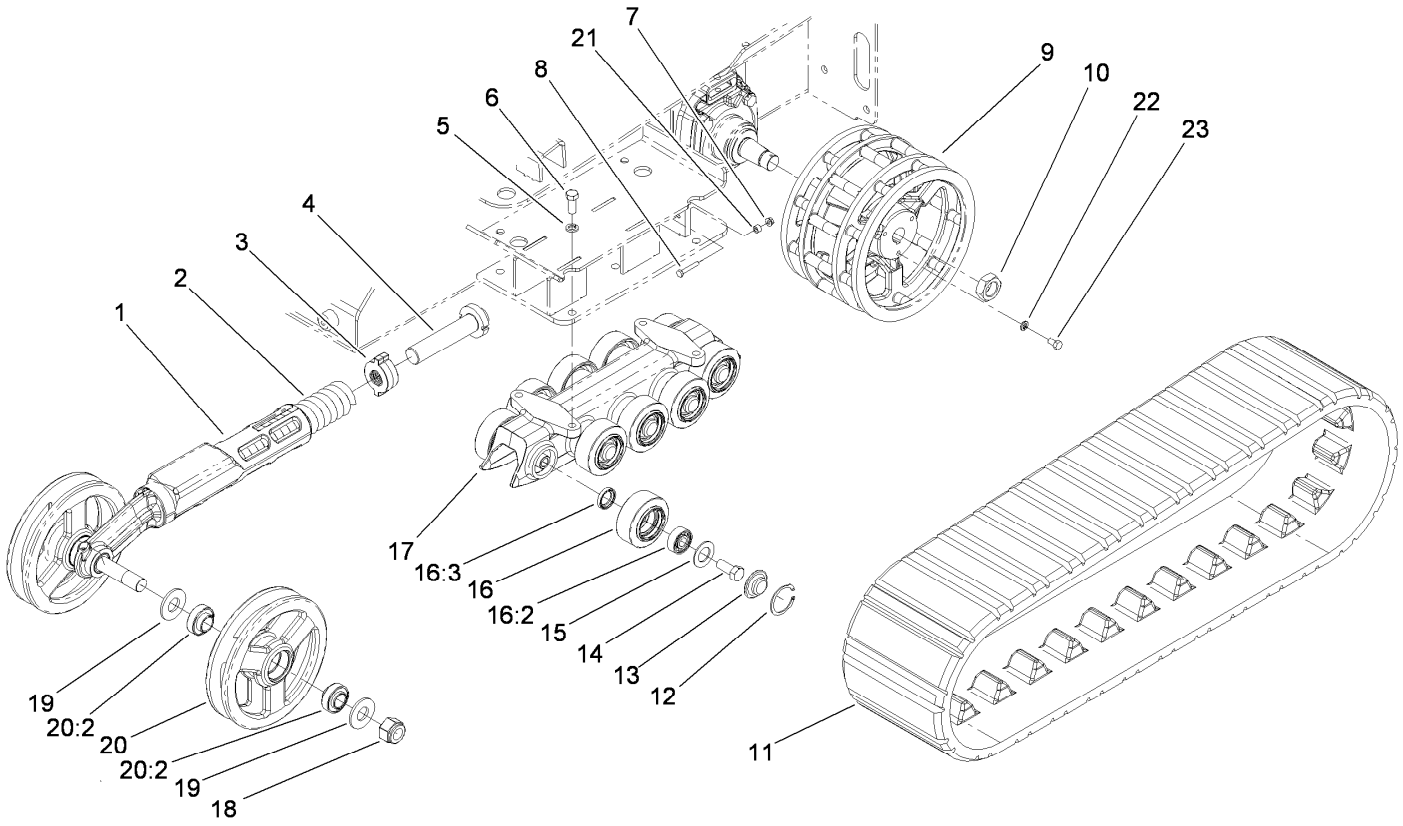

Track and Traction Assembly

Ref.	*Part Number*	*Qty.*	*Description*
1	115-0717-03	2	Arm-Tensioner
2	95-3624	2	Spring-Compression
3	108-4664	2	Block-Tensioner
4	98-9846	2	Bolt-Tensioner
5	3253-7	8	Washer-Lock
6	325-5	8	Screw-HH
7	32128-32	2	Nut-HHF
8	321-37	2	Screw-HH
9	115-0721-03	2	Wheel-Drive
10	107-9319	2	Nut-Hex
11	100-8931	2	Track
12	106-7595	20	Ring-Snap, Internal
13	106-7557	20	Cap-Wheel, Bearing

Ref.	*Part Number*	*Qty.*	*Description*
14	327-4	20	Screw-HH
15	106-7585	20	Gasket-Bogie
16	106-7621	20	Road Wheel ASM
16:2	120-5378	1	Bearing-Ball
16:3	253-118	1	Seal-Oil
17	117-1308-03	2	Guide-Track
18	104-2024	4	Nut-Hex, NI
19	115-0722	8	Washer-Plain
20	104-6123	4	Tensioner Wheel ASM
20:2	104-6129	2	Bearing-Ball
21	98-4799	2	Spacer
22	3253-21	6	Washer-Lock
23	323-34	6	Screw-HH

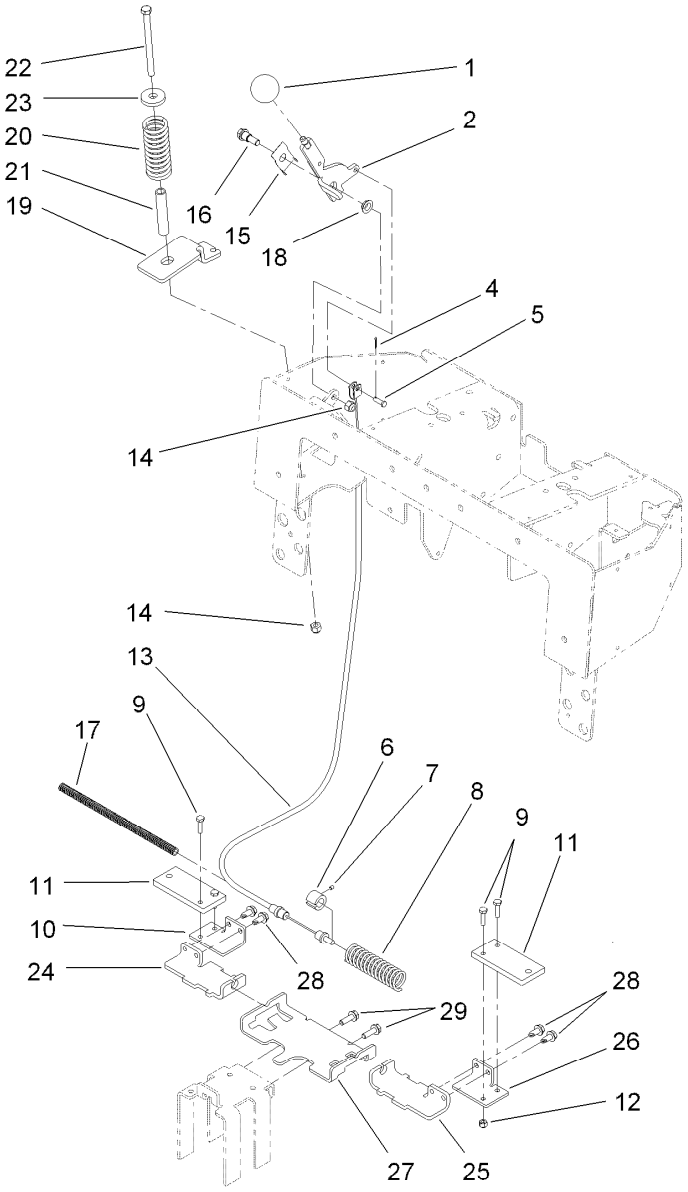

Parking Brake Assembly

Ref.	Part Number	Qty.	Description
1	233-21	1	Knob
2	112-2694-03	1	Handle-Brake
4	3272-1	1	Pin-Cotter
5	283-67	1	Pin-Clevis
6	100-6274	2	Tube-Guide
7	3245-20	2	Screw-Set
8	100-1678	1	Spring
9	321-6	4	Screw-HH
10	112-2789-03	1	Bar-Link, Brake RH
11	112-2735-03	2	Plate-Brake
12	3296-42	4	Nut-Lock, NI
13	112-2791	1	Cable-Brake
14	3296-39	2	Nut-Lock, NI
15	112-2695	1	Spring-Leaf
16	94-6177	1	Bolt-Shoulder

Ref.	Part Number	Qty.	Description
17	100-4697	1	Tube-Convoluted
18	93-2368	1	Bushing-Flange
19	115-4854-03	1	Bracket-Cable, Spring
20	114-1254	1	Spring-Compression
21	114-1255	1	Spacer-Spring
22	323-39	1	Screw-HH
23	98-0691	1	Washer-Hardened
24	112-2788-03	1	Bracket-Mounting, Brake RH
25	112-2733-03	1	Bracket-Mounting, Brake LH
26	112-2734-03	1	Bar-Link, Brake LH
27	110-0224-03	1	Support-Bar, Brake
28	32104-32	4	Screw-HWH
29	3234-11	2	Screw-HHF

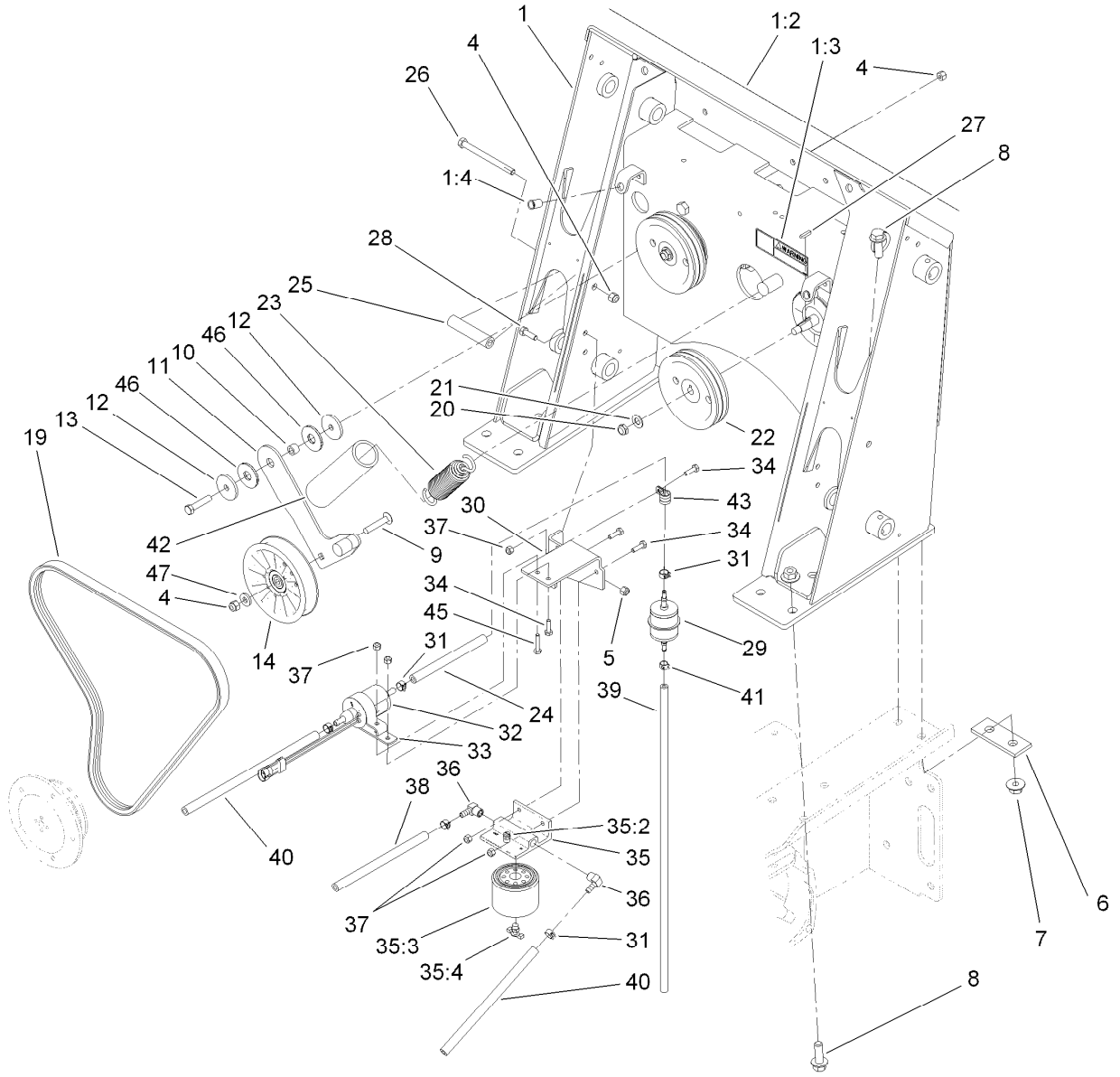

Loader Tower, Fuel Pump and Drive Assembly

Ref.	Part Number	Qty.	Description
1	117-9987	1	Loader Tower ASM
1:2	117-9905	1	Decal-Panel, Control
1:3	93-7814	1	Decal-Danger
1:4	32148-8	2	Nut-Clinch
4	104-8301	4	Nut-HF, NI
5	3296-29	2	Nut-Lock, NI
6	100-6123-01	2	Plate-Stiffener
7	32128-52	10	Nut-Lock, Flange
8	100-6116	10	Screw-HHF
9	117-9971	1	Bolt-Carriage
10	115-4986	1	Spacer
11	117-9968	1	Idler Arm ASM
12	115-1485	2	Washer-Plain
13	323-9	1	Screw-HH
14	119-2358	1	Pulley-Idler
19	108-6262	1	V-Belt
20	3296-38	2	Nut-Lock, NI
21	3256-25	2	Washer-Flat
22	106-5710	2	Pulley-3V
23	105-0383	1	Spring-Extension
24	108-3280	1	Hose-Fuel

Ref.	Part Number	Qty.	Description
25	100-1271	2	Tube-Spacer
26	323-23	2	Screw-HH
27	3-6168	2	Key
28	322-5	2	Screw-HH
29	112-7836	1	Filter-Inline
30	117-1346-03	1	Bracket-Pump, Fuel
31	92-2379	6	Clamp-Hose
32	110-8806	1	Pump-Fuel
33	110-8817	1	Bracket-Pump, Fuel
34	321-5	4	Screw-HH
35	109-2678	1	Filter ASM
35:2	63-8290	1	Vent-Air
35:3	109-3117	1	Filter-Separator, Water
35:4	63-8310	1	Valve-Drain
36	353-781	2	Fitting-HYD, 90
37	3296-42	5	Nut-Lock, NI
38	110-4124	1	Hose-Fuel
39	109-0302	1	Hose-Fuel
40	106-1126	1	Hose-Fuel
41	2412-98	2	Clamp-Hose
42	112-2409	1	Retainer-Spring

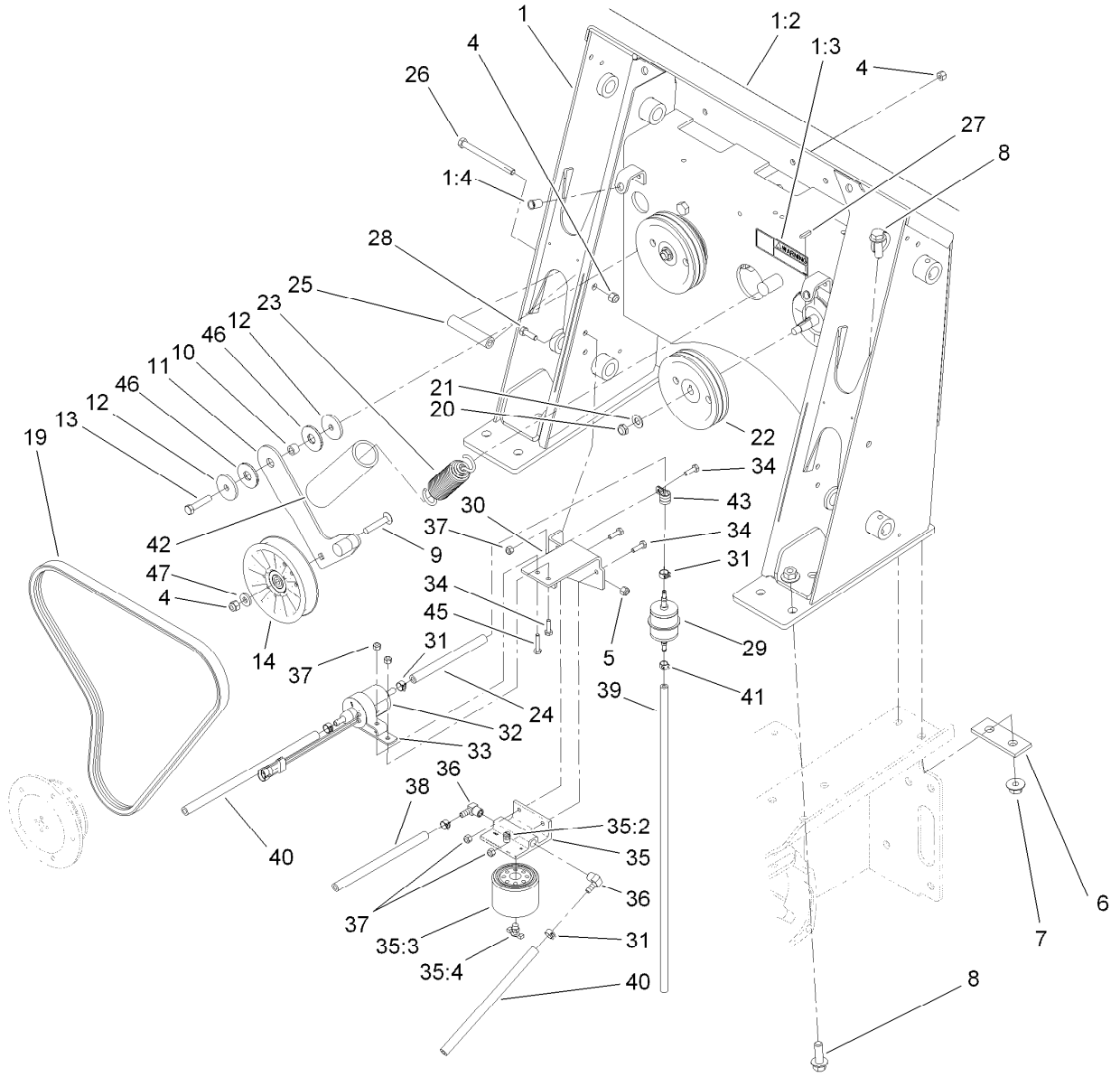

Loader Tower, Fuel Pump and Drive Assembly (continued)

Ref.	Part Number	Qty.	Description
43	2412-134	1	Clamp-R
45	321-8	1	Screw-HH
46	114-0463	2	Washer-Friction, Composite
47	43-0940	1	Spacer

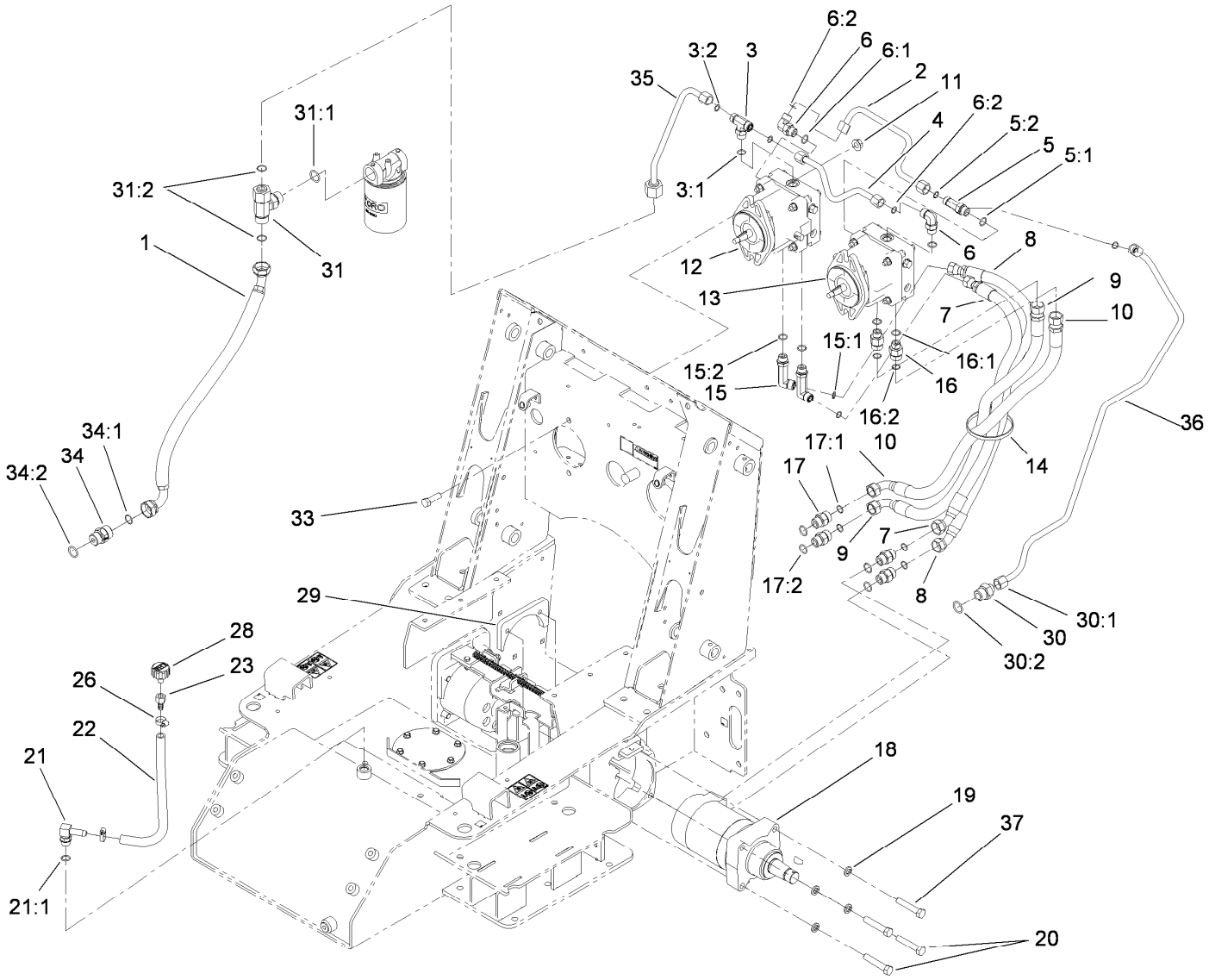

Traction Hydraulic Assembly

Ref.	Part Number	Qty.	Description
1	112-2562	1	Hose-HYD
2	98-0200	1	Tube-HYD
3	340-157	1	Fitting-HYD, Tee
3:1	237-79	1	O-Ring
3:2	237-30	2	O-Ring
4	106-9330	1	Tube-HYD
5	340-109	1	Fitting-Tee
5:1	237-79	1	O-Ring
5:2	237-30	2	O-Ring
6	340-98	2	Fitting-Elbow, 90 DEG
6:1	237-79	1	O-Ring
6:2	237-30	1	O-Ring
7	107-3631	1	Hose-HYD
8	107-3632	1	Hose-HYD
9	115-4827	1	Hose-HYD
10	115-4826	1	Hose-HYD
11	32128-52	4	Nut-Lock, Flange
12	106-9590	1	Pump-HYD, RH
13	106-9591	1	Pump-HYD, LH
14	3334-945	1	Tie-Cable
15	99-6160	2	Fitting-Elbow, 90 Long

Ref.	Part Number	Qty.	Description
15:1	237-30	1	O-Ring
15:2	237-79	1	O-Ring
16	340-155	2	Fitting-Straight
16:1	237-79	1	O-Ring
16:2	237-151	1	O-Ring
17	340-7	4	Fitting-Straight
17:1	237-65	1	O-Ring
17:2	237-80	1	O-Ring
18	114-1756	2	HYD Motor ASM
19	3253-7	8	Washer-Lock
20	115-4845	4	Screw-HH, TAP
21	354-134	1	Fitting-90
21:1	237-79	1	O-Ring
22	114-8599	1	Hose-Drain, Engine Oil
23	354-94	1	Fitting-Female, Barbed
26	2412-36	2	Clamp-Hose
28	68-6150	1	Breather
29	98-2763-03	2	Plate-Mounting
30	100-4240	1	Fitting-STR
30:1	237-30	1	O-Ring
30:2	237-81	1	O-Ring

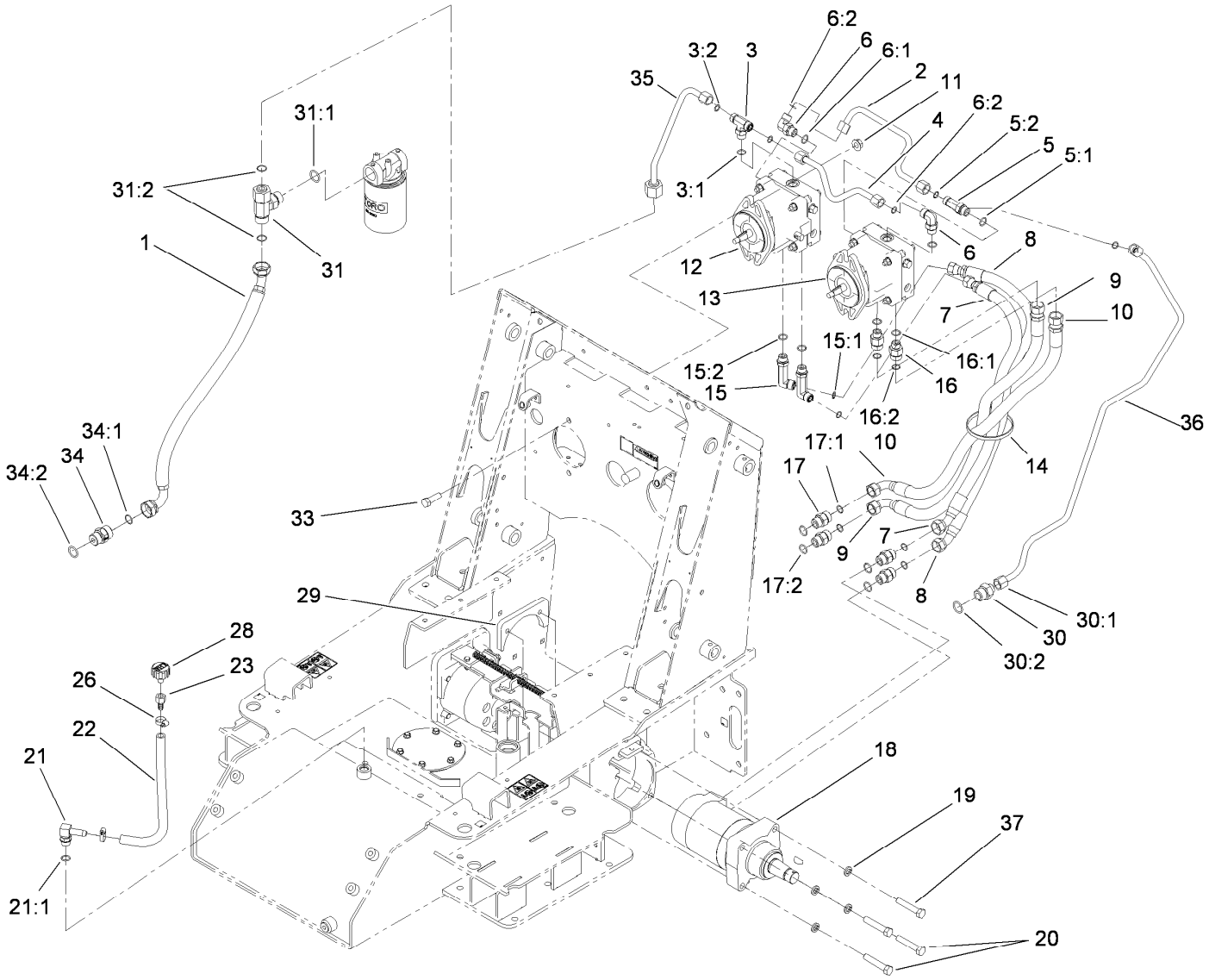

Traction Hydraulic Assembly (continued)

Ref.	Part Number	Qty.	Description
31	100-4836	1	Fitting-Tee
31:1	237-81	1	O-Ring
31:2	237-58	2	O-Ring
33	325-6	4	Screw-HH
34	108-6306	1	Valve-Check, HYD
34:1	237-30	1	O-Ring
34:2	237-81	1	O-Ring
35	107-3634	1	Tube-HYD
36	107-3633	1	Tube-HYD
37	325-19	4	Screw-HH

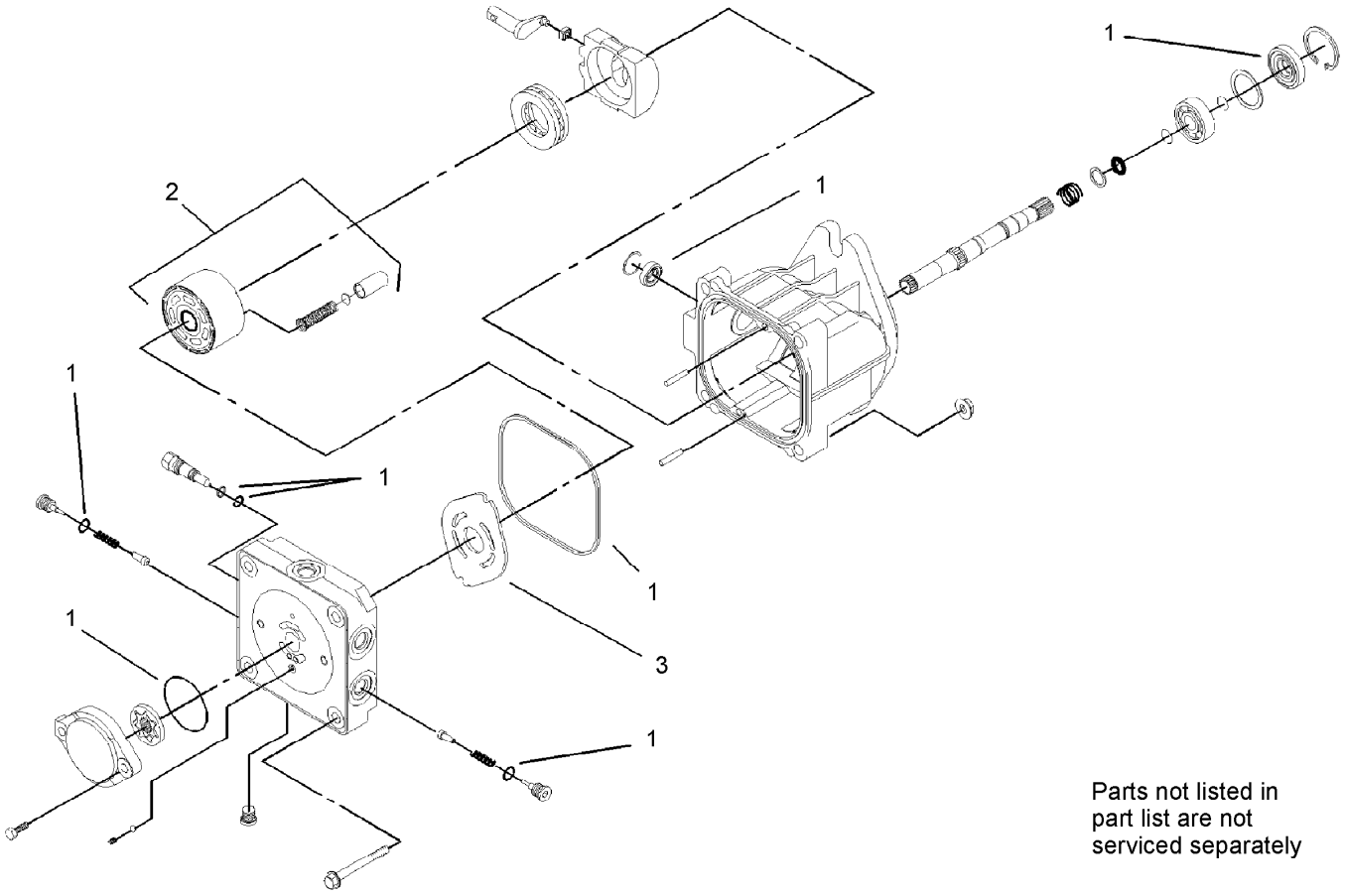

Parts not listed in part list are not serviced separately

Hydraulic Pump Assembly No. 106-9590 and 106-9591

Ref.	*Part Number*	*Qty.*	*Description*
1	100-6110	1	Overhaul Seal Kit
2	94-1913	1	Cylinder Block ASM
3	100-6112	1	Plate-Valve

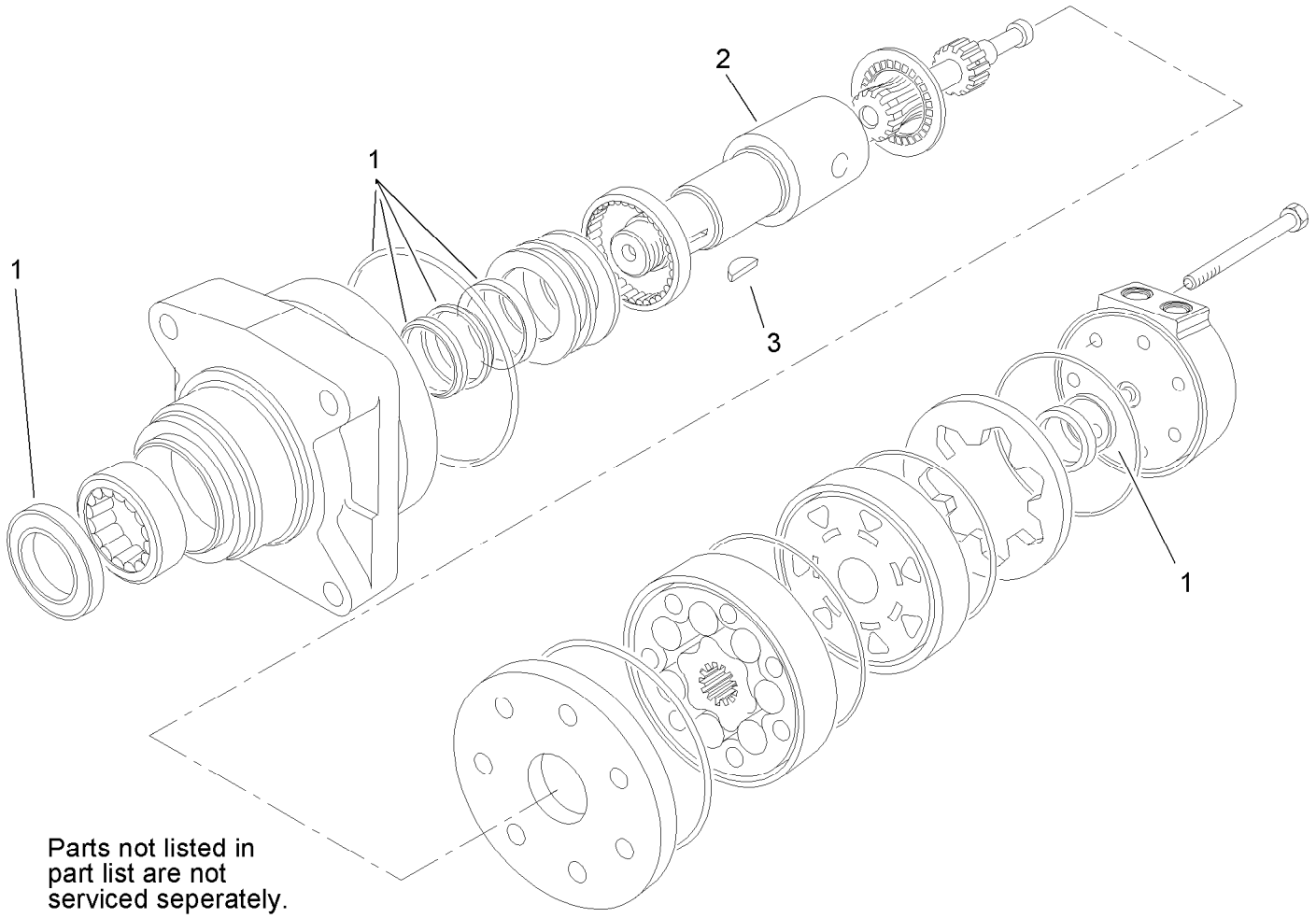

Parts not listed in part list are not serviced seperately.

Hydraulic Motor Assembly No. 114-1756

Ref.	*Part Number*	*Qty.*	*Description*
1	100-6131	1	Seal Kit
2	106-7645	1	Coupling-Shaft
3	3257-42	1	Key-Woodruff

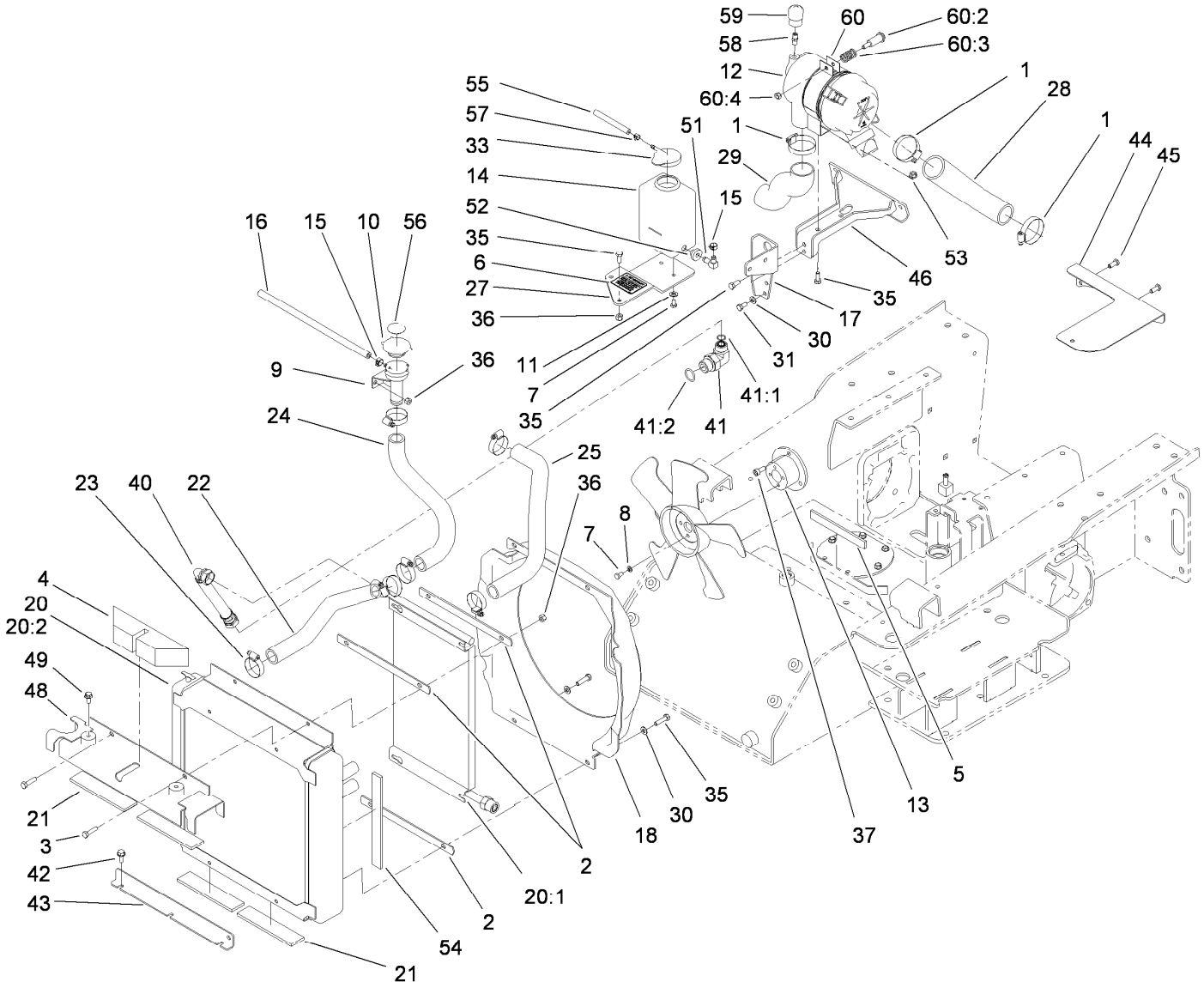

Radiator and Air Cleaner Assembly

Ref.	Part Number	Qty.	Description
1	2412-92	3	Clamp-Hose
2	108-6395-03	3	Plate-Backing
3	322-6	4	Screw-HH
4	108-6372	1	Seal-Foam
5	112-2466	1	Pad-Rubber
6	115-4865	1	Decal-Fill, Radiator
7	321-2	6	Screw-HH
8	3253-3	4	Washer-Lock
9	108-6312	1	Tube-Filler, Radiator
10	93-5957	1	Cap-Radiator
11	3256-22	2	Washer-Flat
12	117-9989	1	Air Cleaner ASM
13	112-2576-03	1	Spacer-Machined
14	1-643163	1	Tank-Overflow
15	92-2379	2	Clamp-Hose
16	110-4110	1	Hose-Fuel
17	107-3645-03	1	Mount-Filter, Air
18	108-6347	1	Shroud-Fan

Ref.	Part Number	Qty.	Description
20		1	Radiator And Oil Cooler ASM ●
20:1	106-9597	1	Cooler-Oil, HYD
20:2	106-9595	1	Radiator
21	112-2401	4	Pad-Rubber
22	108-6309	1	Hose-Radiator
23	2412-34	6	Clamp-Hose
24	108-6310	1	Hose-Radiator
25	112-2459	1	Hose-Radiator, Lower
27	112-2458-03	1	Bracket-Tank, Overflow
28	108-6336	1	Hose-Air, Inlet
29	112-2431	1	Hose-Air
30	3256-23	4	Washer-Plain
31	99-5132	2	Bolt
33	1-643164	1	Cap-Tank, Overflow
35	322-3	8	Screw-HH
36	3296-29	8	Nut-Lock, NI
37	108-6343	3	Screw-HSH,Lock

● Not serviced separately

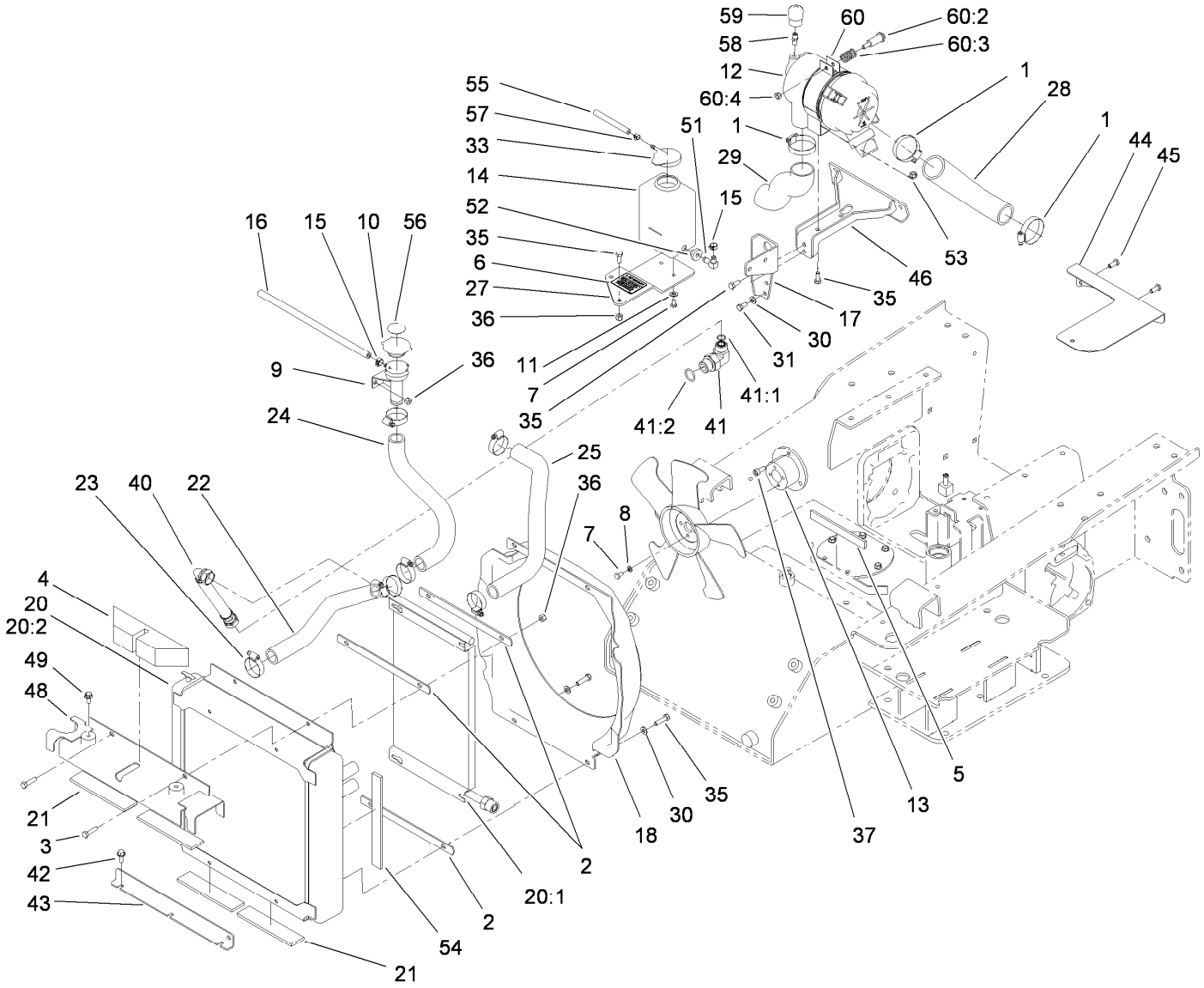

Radiator and Air Cleaner Assembly (continued)

Ref.	Part Number	Qty.	Description
40	112-2442	1	Hose-HYD
41	340-139	1	Fitting-Elbow 90
41:1	237-81	1	O-Ring
41:2	237-65	1	O-Ring
42	32144-11	3	Screw-HWH
43	108-6397-03	1	Mount-Radiator
44	108-6362	1	Plate-Baffle, Starter
45	33114-020	2	Screw-HH
46	108-6390-03	1	Bracket ASM
48	112-2440-03	1	Bracket-Radiator
49	3234-12	2	Screw-HHF
51	46-6550	1	Fitting-Elbow, 90 DEG
52	46-6560	1	Bushing

Ref.	Part Number	Qty.	Description
53	32128-20	2	Nut-HF
54	112-2529	2	Foam-Seal
55	108-6344	1	Hose-Fuel
56	106-6755	1	Decal-Cap, Radiator
57	2412-80	1	Clamp-Hose
58	105-4292	1	Nipple-Pipe
59	93-9164	1	Indicator-Mini
60	93-2191	1	Air Cleaner Mounting Band ASM
60:2	94-3653	1	Bolt
60:3	94-3654	1	Spring
60:4	48-9510	1	*obs* Nut

● Not serviced separately

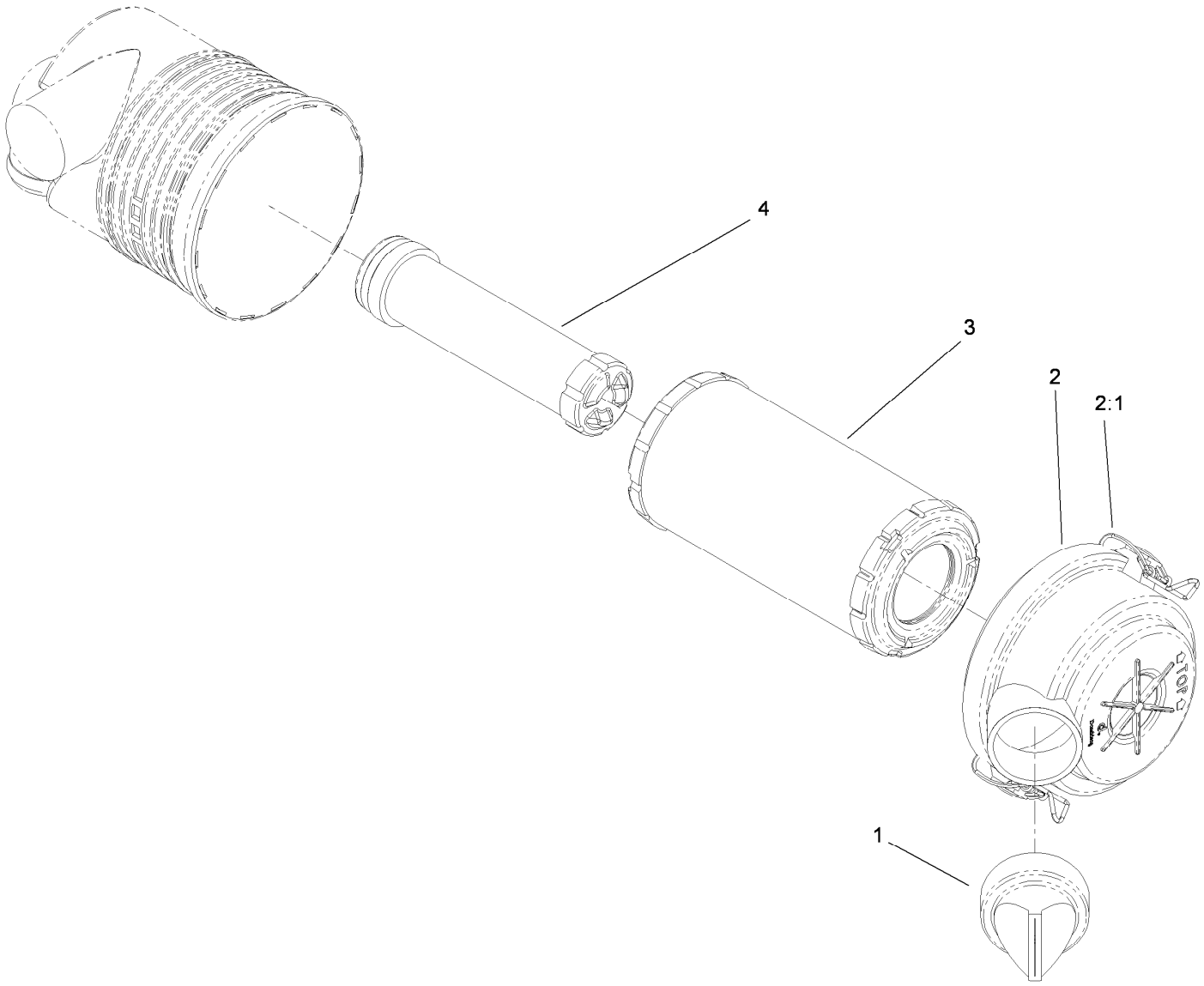

Air Cleaner Assembly No. 117-9989

Ref.	*Part Number*	*Qty.*	*Description*
1	87-9400	1	Valve-Vacuator
2	94-3652	1	Cover ASM
2:1	1-643283	2	Latch-Cleaner, Air
3	108-3811	1	Filter-Air V-Twin HD
4	98-2982	1	Filter-Element, Safety

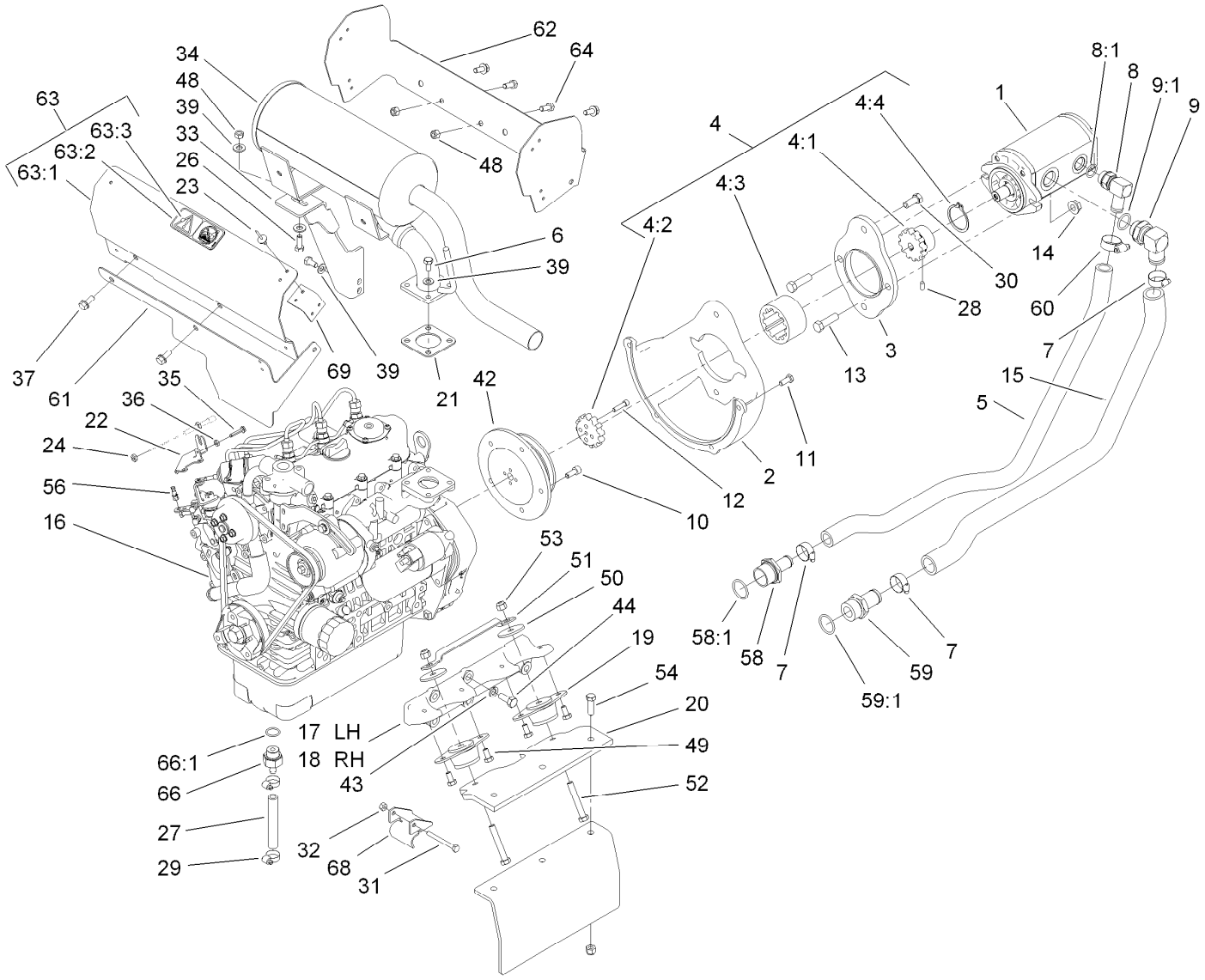

Hydraulic Pump and Filter Assembly

Ref.	Part Number	Qty.	Description
1	106-9589	1	Pump-HYD
2	108-6235-03	1	Pump-Mount
3	108-6211-03	1	Plate-Mount, Pump
4	108-6314	1	Coupling ASM
4:1	106-9562	1	Hub-Coupling
4:2	106-9587	1	Sleeve-Hub
4:3	106-9561	1	Sleeve-Coupling
4:4	108-6383	1	Ring-Snap, Coupling
5	108-6315	1	Hose-Formed, Suction
6	99-5132	6	Bolt
7	2412-34	3	Clamp-Hose
8	87-8170	1	Fitting-90
8:1	237-80	1	O-Ring
9	100-4202	1	Fitting-90
9:1	237-81	1	O-Ring
10	108-6343	5	Screw-HSH,Lock
11	33114-020	4	Screw-HH
12	3274-26	4	Screw-HSH
13	324-6	2	Screw-HH
14	32128-42	2	Nut-HF
15	108-6316	1	Hose-Formed, Suction

Ref.	Part Number	Qty.	Description
16	112-2599	1	Engine-Kubota, D902
17	108-6269-03	1	Mount-Engine, LH
18	108-6271-03	1	Mount-Engine, RH
19	120-6274	4	Mount-Engine
20	107-3617-03	2	Plate-Mount, Engine
21	99-8343	1	Gasket-Muffler
22	108-5922	1	Bracket-Support, Throttle
23	146489	16	Rivet
24	3220-1	2	Nut-Jam
26	322-4	1	Screw-HH
27	114-8599	1	Hose-Drain, Engine Oil
28	3245-9	1	Screw-Set, HSH
29	2412-36	2	Clamp-Hose
30	324-4	2	Screw-HH
31	321-18	2	Screw-HH
32	32152-4	2	Nut-Lock, Cone
33	112-2403-03	1	Support-Muffler
34	106-9584	1	Muffler ASM
35	117-1701	1	Screw-HWHTF
36	3217-26	1	Nut-Hex
37	3234-5	4	Screw-HHF

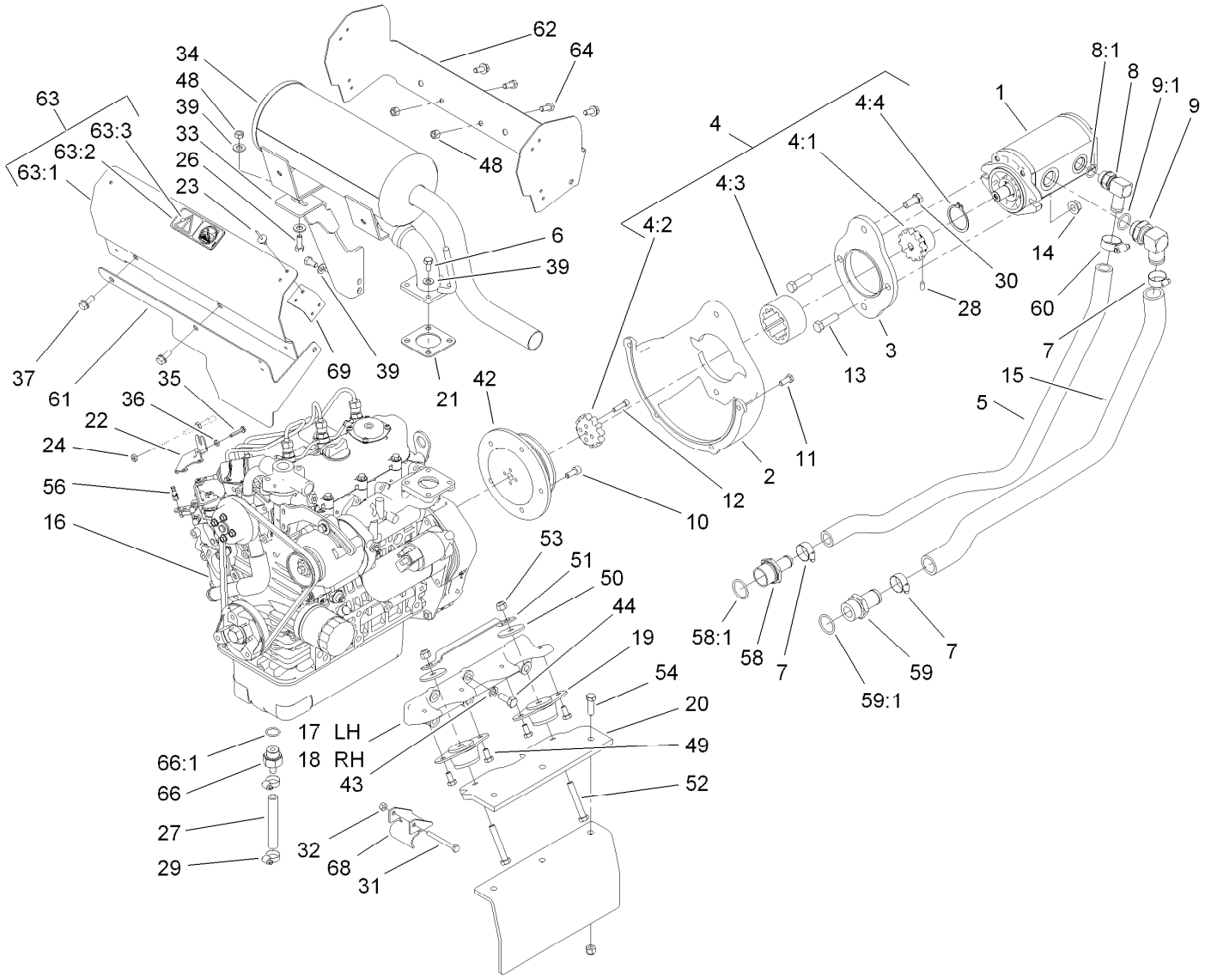

Hydraulic Pump and Filter Assembly (continued)

Ref.	Part Number	Qty.	Description
39	3256-23	8	Washer-Plain
42	112-2568-03	1	Pulley
43	42-9600	10	Washer-Lock
44	43-0090	10	Screw-HH
48	32152-1	6	Nut-Lock, Cone
49	322-2	8	Screw-HH
50	63-7400	4	Washer-Rebound
51	108-6340-03	2	Strap-Rebound
52	323-12	4	Screw-HH
53	3296-39	10	Nut-Lock, NI
54	323-7	6	Screw-HH
56	108-5928	1	Swivel-Stop, Cable
58	99-6932	1	Fitting-STR
58:1	237-117	1	O-Ring

Ref.	Part Number	Qty.	Description
59	354-78	1	Fitting-STR
59:1	237-146	1	O-Ring
60	2412-129	1	Clamp-Hose
61	108-6356	1	Plate-Baffle, Lower
62	108-6354	1	Plate-Baffle
63	112-2564	1	Heat Shield Baffle ASM
63:1	108-6355	1	Plate-Baffle, Muffler
63:2	115-4882	1	Plate-Hot Surface
63:3	3269-31	2	Rivet-Pop
64	322-3	3	Screw-HH
66	114-8587	1	Fitting-Hose
66:1	98-9399	1	Gasket
68	112-2533-03	2	Guide-Cable
69	112-2449	4	Bracket-Shield

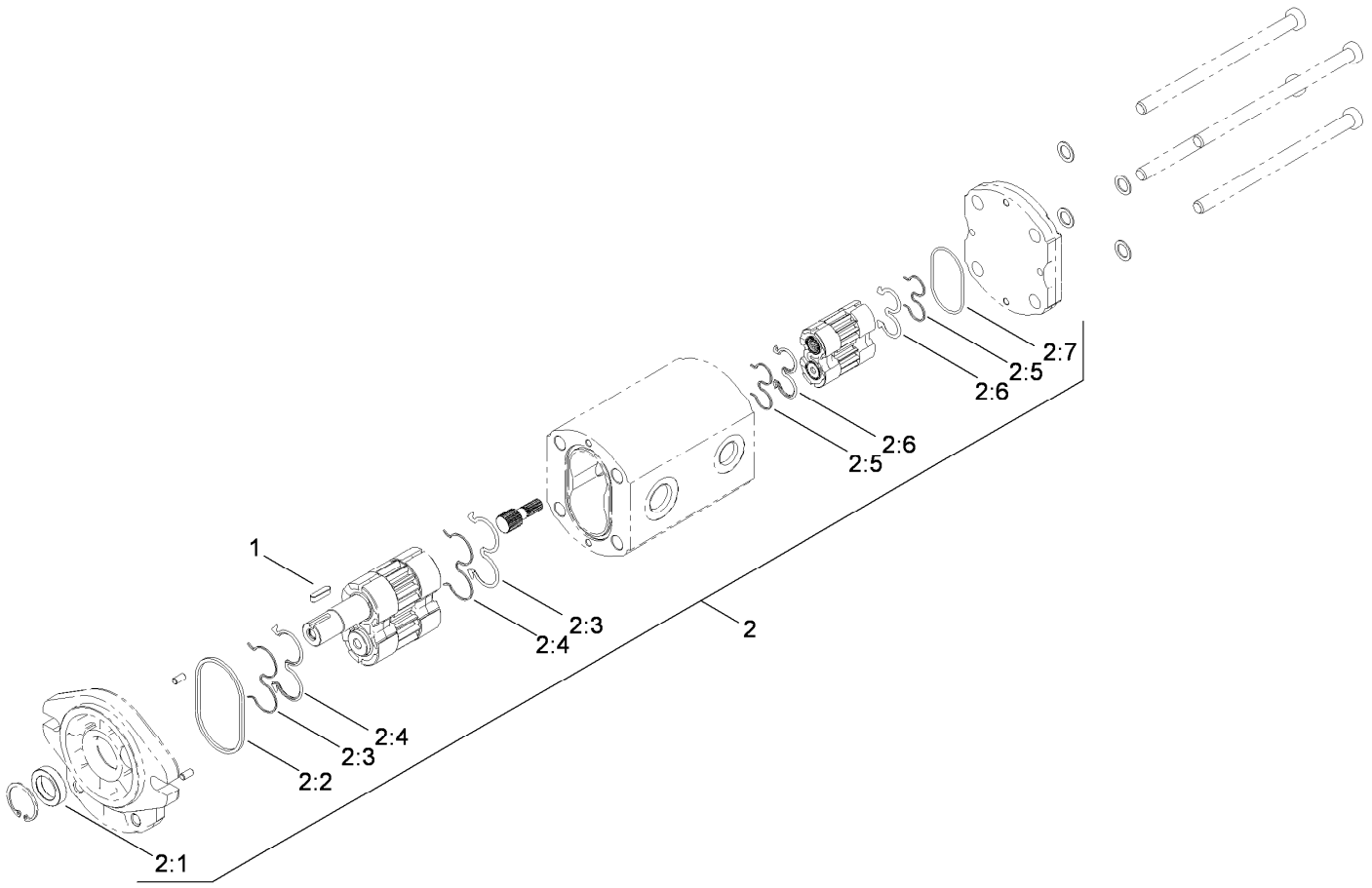

Hydraulic Pump Assembly No. 106-9589

Ref.	*Part Number*	*Qty.*	*Description*
1	100-4238	1	Key-Square
2	107-9316	1	Seal Kit
2:1		1	Seal-Shaft ●
2:2		1	Seal-Square ●
2:3		2	Ring-Backup ●
2:4		2	Seal-Gear ●
2:5		2	Ring-Backup ●
2:6		2	Seal-Gear, Rear ●
2:7		1	O-Ring ●

● Not serviced separately

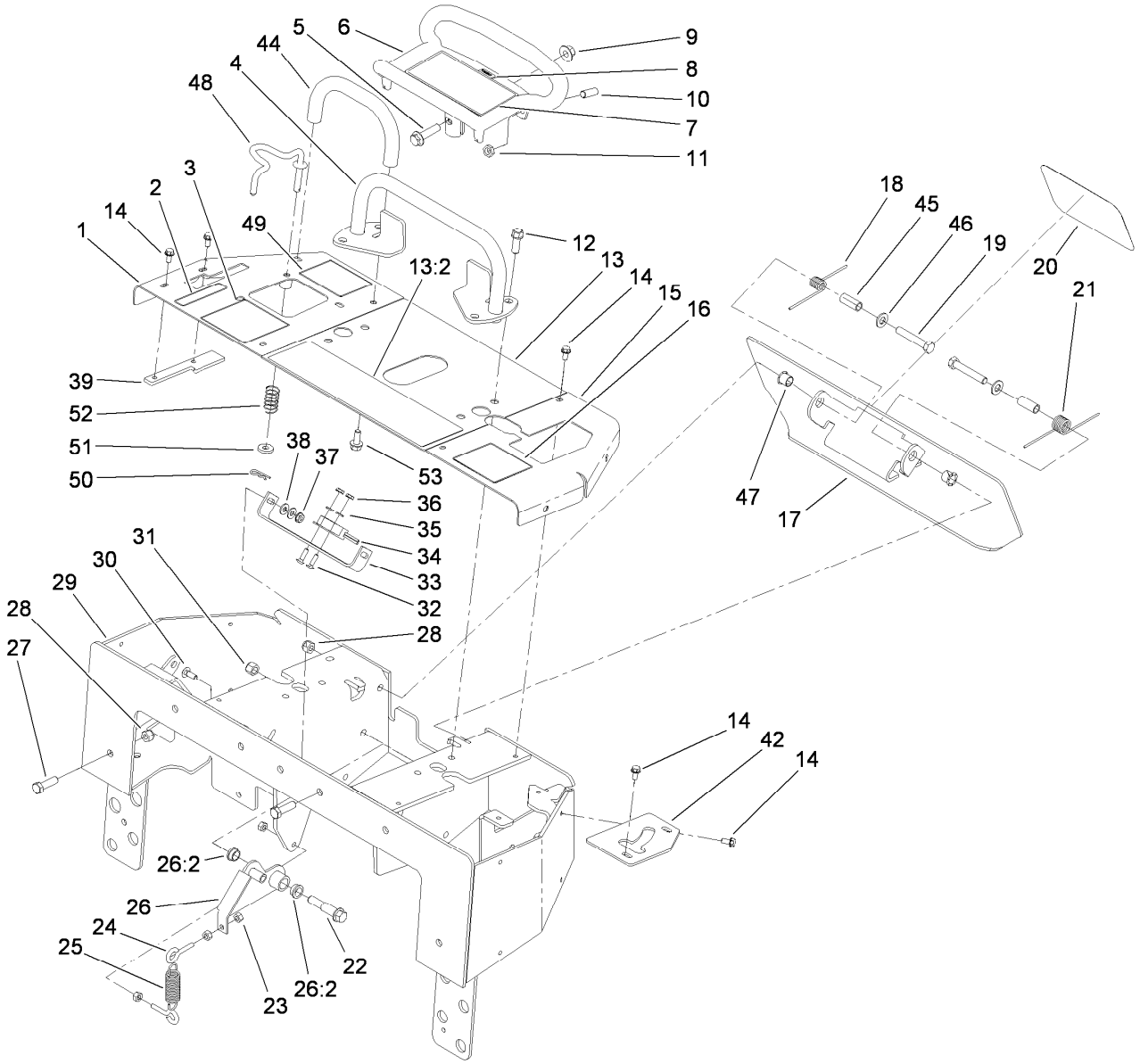

Control Panel Assembly

Ref.	Part Number	Qty.	Description
1	115-4836-01	1	Panel-RH
2	115-4859	1	Decal-Brake
3	115-4857	1	Decal-Control, Loader
4	106-7715	1	Bar-Reference
5	3234-18	1	Screw-HHF
6	106-7614-03	1	Handle-Control
7	115-4020	1	Decal-Traction
8	98-1459	1	Decal
9	32128-43	1	Nut-Flange
10	3247-6	2	Screw-Set
11	3218-3	2	Nut-Jam
12	95-1726	4	Screw-Taptite
13	108-4643	1	Center Panel ASM
13:2	115-4860	1	Decal-Danger
14	9266714	11	Screw-HWH
15	112-2737-01	1	Panel-LH
16	115-4861	1	Decal-Control, Auxiliary
17	112-2786-03	1	Plate-Reverse
18	98-8425	1	Spring-Torsion, LH
19	323-11	2	Screw-HH
20	105-1217	1	Decal

Ref.	Part Number	Qty.	Description
21	98-8424	1	Spring-Torsion, RH
22	66-0560	1	Bolt-Shoulder
23	32128-32	4	Nut-HHF
24	71-2870	2	Bolt-Eye
25	108-4724	1	Spring-Extension
26	100-4203	1	Neutral Centering Lever ASM
26:2	256-156	2	Bushing-Flange
27	323-7	5	Screw-HH
28	3296-39	7	Nut-Lock, NI
29	110-0228-01	1	Panel-Control
30	3229-1	2	Screw-CARR
31	3296-6	1	Nut-Lock
32	3229-20	2	Screw-CARR
33	100-1263	1	Plate-Switch
34	100-1270	1	Switch-Proximity
35	3256-51	2	Washer-Flat
36	32149-7	2	Nut-Keps
37	32149-2	2	Nut-Keps
38	3256-22	4	Washer-Flat
39	112-2691-01	1	Plate-Locking, Brake

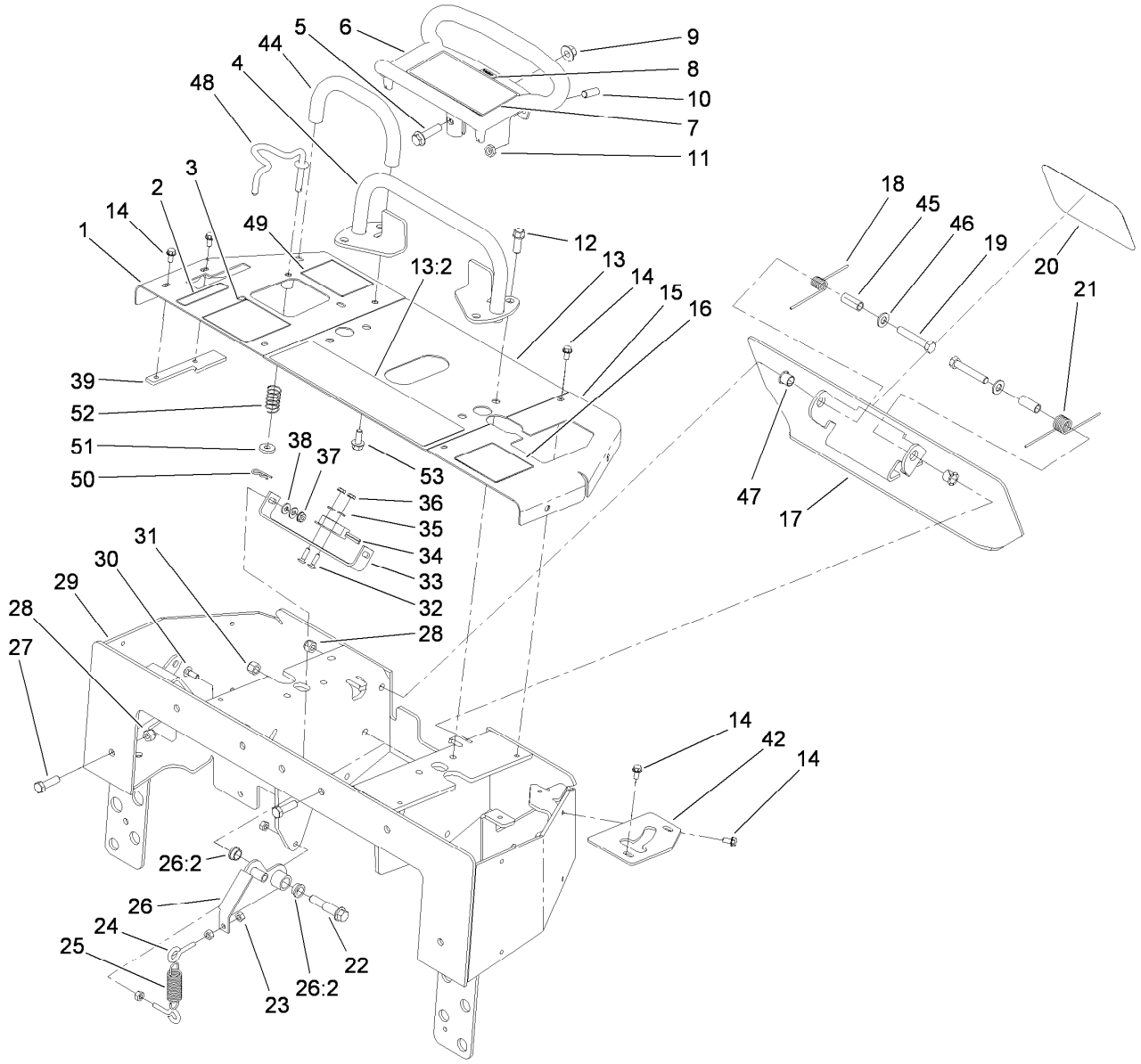

Control Panel Assembly (continued)

Ref.	Part Number	Qty.	Description
42	112-2749-01	1	Plate-Stop
44	112-2620	1	Bar-Reference
45	114-1337	2	Spacer-Spring
46	3256-24	2	Washer-Plain
47	256-257	2	Bushing-Nyliner
48	115-4580	1	Rod-Interlock

Ref.	Part Number	Qty.	Description
49	115-4862	1	Decal-Loader Lock
50	3290-307	1	Pin-Cotter
51	88-7200	1	Washer-Flat
52	85-6750	1	Spring-Control
53	3234-5	2	Screw-HHF

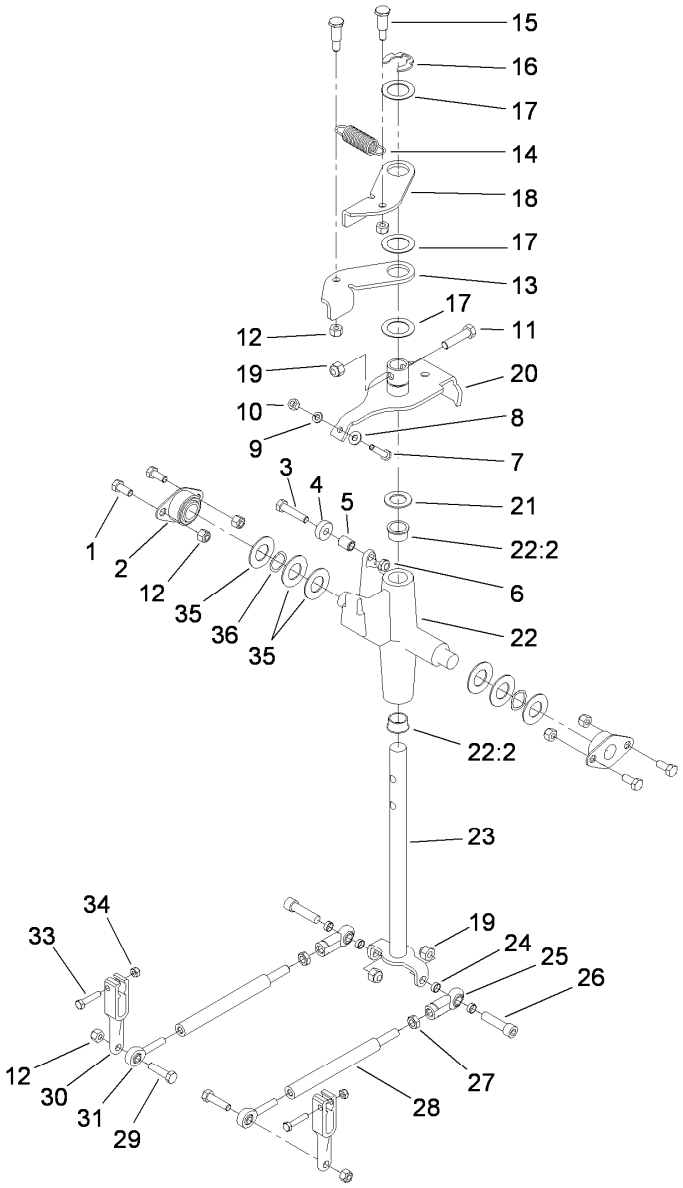

Traction Control Assembly

Ref.	Part Number	Qty.	Description
1	322-3	4	Screw-HH
2	68-2970	2	Bushing
3	322-7	1	Screw-HH
4	251-259	1	Bearing-Ball
5	88-7450	1	Spacer-Lever, Control
6	3296-47	1	Nut-Lock,NI
7	114-0282	1	Screw-HH
8	3256-22	1	Washer-Flat
9	3253-3	1	Washer-Lock
10	3217-5	1	Nut-Hex
11	323-8	1	Screw-HH
12	3296-29	8	Nut-Lock, NI
13	98-8407	1	Lever-Return, RH
14	108-4724	1	Spring-Extension
15	63-2650	2	Screw-Shoulder
16	32151-91	1	Ring-Retaining
17	108-9743	3	Washer-Plain
18	98-8408	1	Lever-Return, LH

Ref.	Part Number	Qty.	Description
19	3296-39	3	Nut-Lock, NI
20	112-2783	1	Lever-Pivot
21	257-8	1	Washer-Thrust
22	106-5737	1	Control Support ASM
22:2	256-252	2	Bearing-Flange
23	117-6335	1	Rod-Drive
24	117-9915	4	Spacer
25	103-1167	2	Joint-Ball End, LH
26	3274-2	2	Screw-HSH
27	3220-16	2	Nut-Hex Jam, LH
28	117-9900	2	Rod-Linkage
29	322-6	2	Screw-HH
30	117-3964-03	2	Arm-Control, Pump
31	117-9969	2	Bearing-Rod End, RH
33	33113-030	2	Screw-HH
34	33023-00	2	Nut-Lock
35	3256-39	2	Washer-Flat
36	95-3703	2	Washer-Spring, Wave

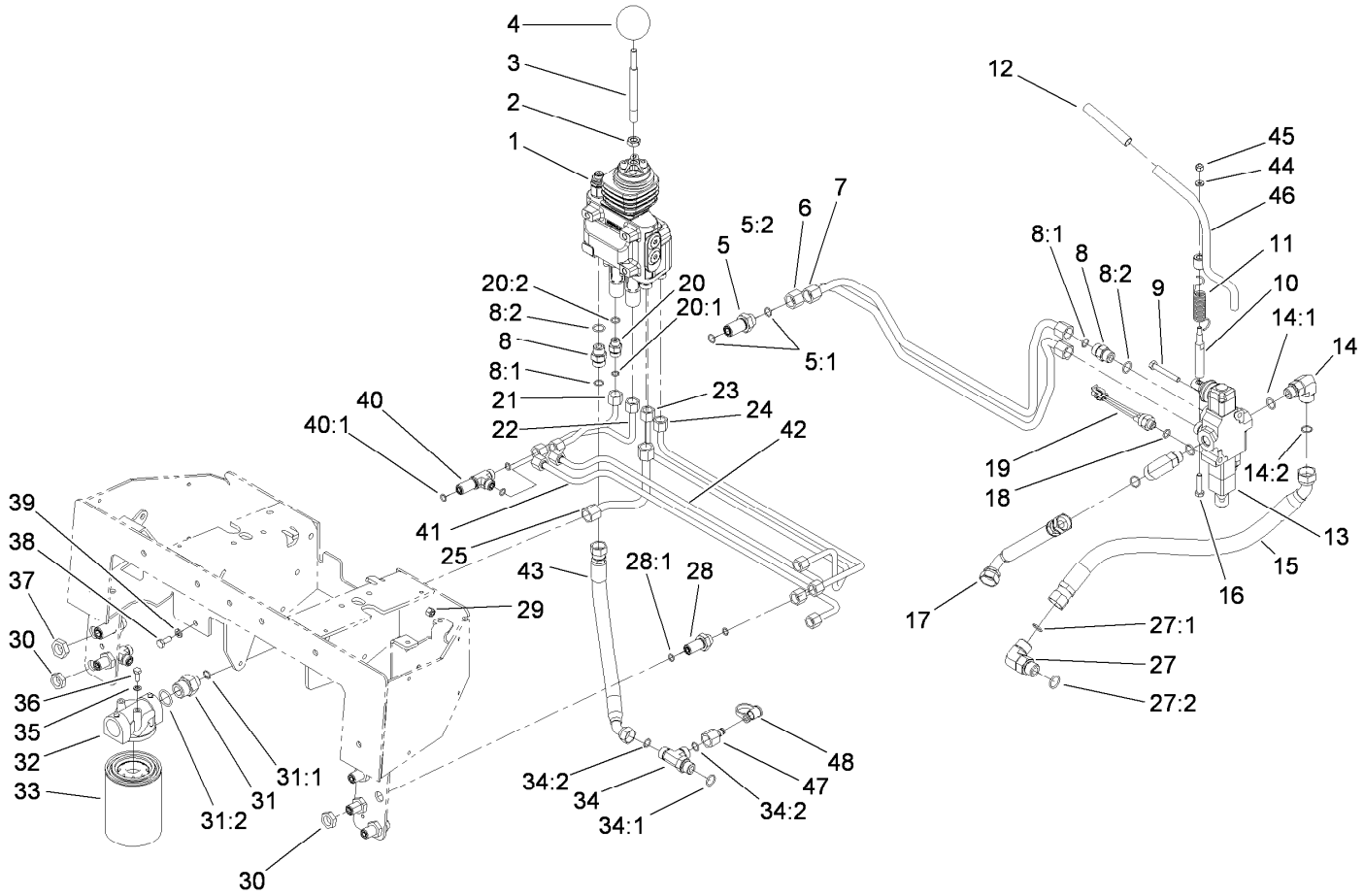

Principal Hydraulic Assembly

Ref.	Part Number	Qty.	Description
1	106-9307	1	2 Spool Valve ASM
2	51-2070	1	Nut
3	108-4675	1	Shaft-Handle, Loader
4	233-21	1	Knob
5	340-161	2	Fitting-Bulkhead
5:1	237-30	2	O-Ring
5:2	340-127	1	Nut-Bulkhead
6	106-9310	1	Tube-HYD
7	106-9311	1	Tube-HYD
8	340-4	4	Fitting-Straight
8:1	237-30	1	O-Ring
8:2	237-79	1	O-Ring
9	322-11	2	Screw-HH
10	104-2827	1	Spacer-Hiflo
11	112-2738	1	Spring-Torsion
12	112-2605	1	Grip-Rubber
13	104-2831	1	1 Spool Valve ASM
14	340-153	2	Fitting-Elbow, 90 DEG
14:1	237-79	1	O-Ring
14:2	237-151	1	O-Ring
15	112-2561	1	Hose-HYD
16	48-7740	1	Screw
17	112-2443	1	Hose-HYD
18	237-42	1	O-Ring
19	72-4310	1	Switch-Ball
20	340-2	4	Fitting-Straight
20:1	237-22	1	O-Ring

Ref.	Part Number	Qty.	Description
20:2	237-42	1	O-Ring
21	106-9315	1	Tube-HYD
22	106-9313	1	Tube-HYD
23	106-9312	1	Tube-HYD
24	106-9314	1	Tube-HYD
25	106-9385	1	Tube-HYD
27	340-17	1	Fitting-Elbow, 90 DEG
27:1	237-65	1	O-Ring
27:2	237-80	1	O-Ring
28	340-71	4	Fitting-Straight, Bulkhead
28:1	237-22	2	O-Ring
29	3296-29	2	Nut-Lock, NI
30	340-70	6	Nut-Lock
31	100-4240	1	Fitting-STR
31:1	237-30	1	O-Ring
31:2	237-81	1	O-Ring
32	92-5821	1	Head-Filter
33	86-3010	2	Filter-Oil
34	340-109	1	Fitting-Tee
34:1	237-79	1	O-Ring
34:2	237-30	2	O-Ring
35	3253-3	2	Washer-Lock
36	321-4	2	Screw-HH
37	340-127	2	Nut-Bulkhead
38	322-4	3	Screw-HH
39	3253-4	3	Washer-Lock
40	340-68	2	Fitting-Tee, Bulkhead
40:1	237-22	3	O-Ring

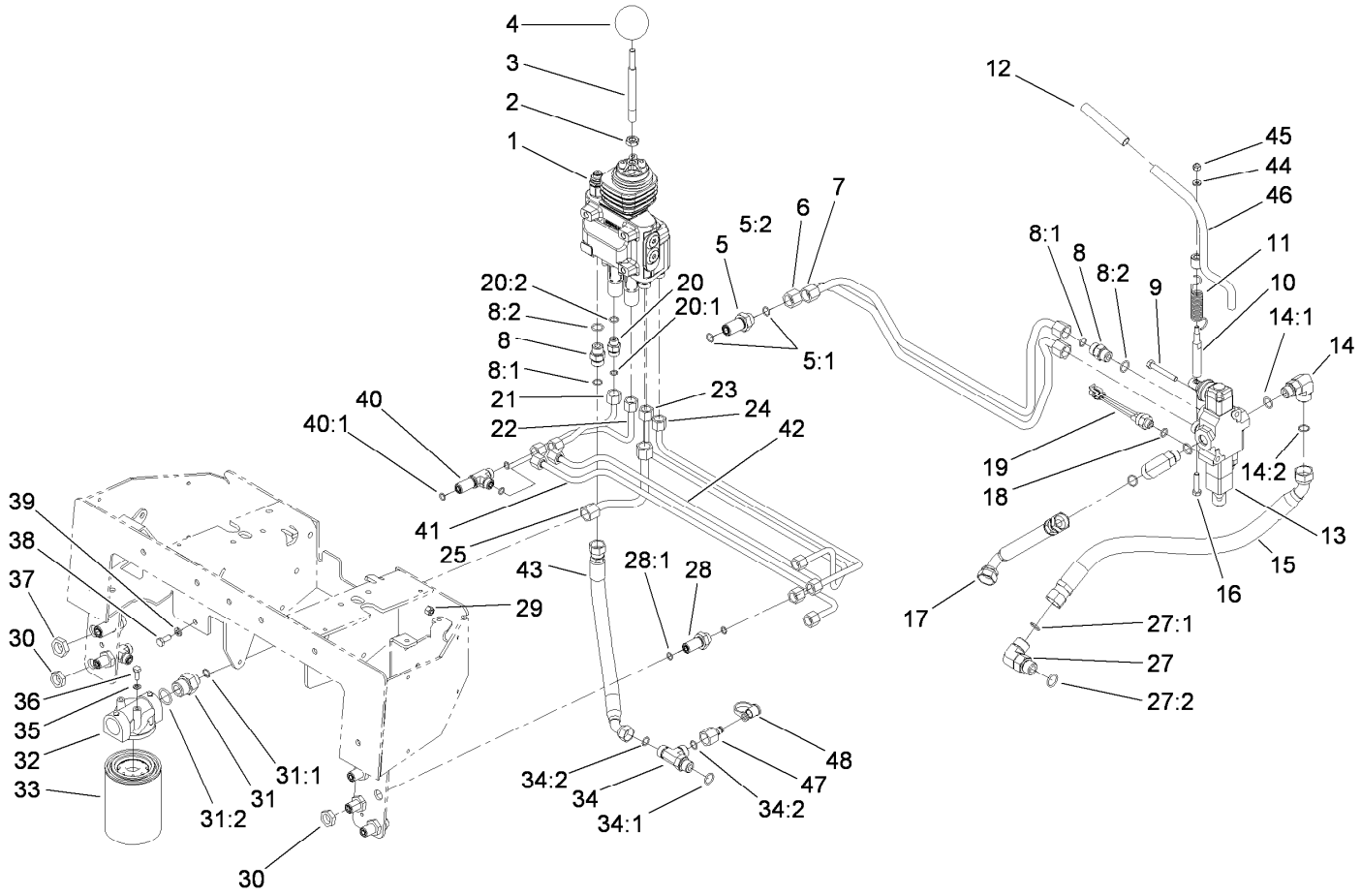

Principal Hydraulic Assembly (continued)

Ref.	Part Number	Qty.	Description
41	106-9316	1	Tube-HYD
42	106-9317	1	Tube-HYD
43	112-2560	1	Hose-HYD
44	3256-16	1	Washer-Flat
45	3296-42	1	Nut-Lock, NI
46	112-2739	1	Lever-Auxiliary
47	100-5616	1	Fitting
48	354-79	1	Cap-Dust

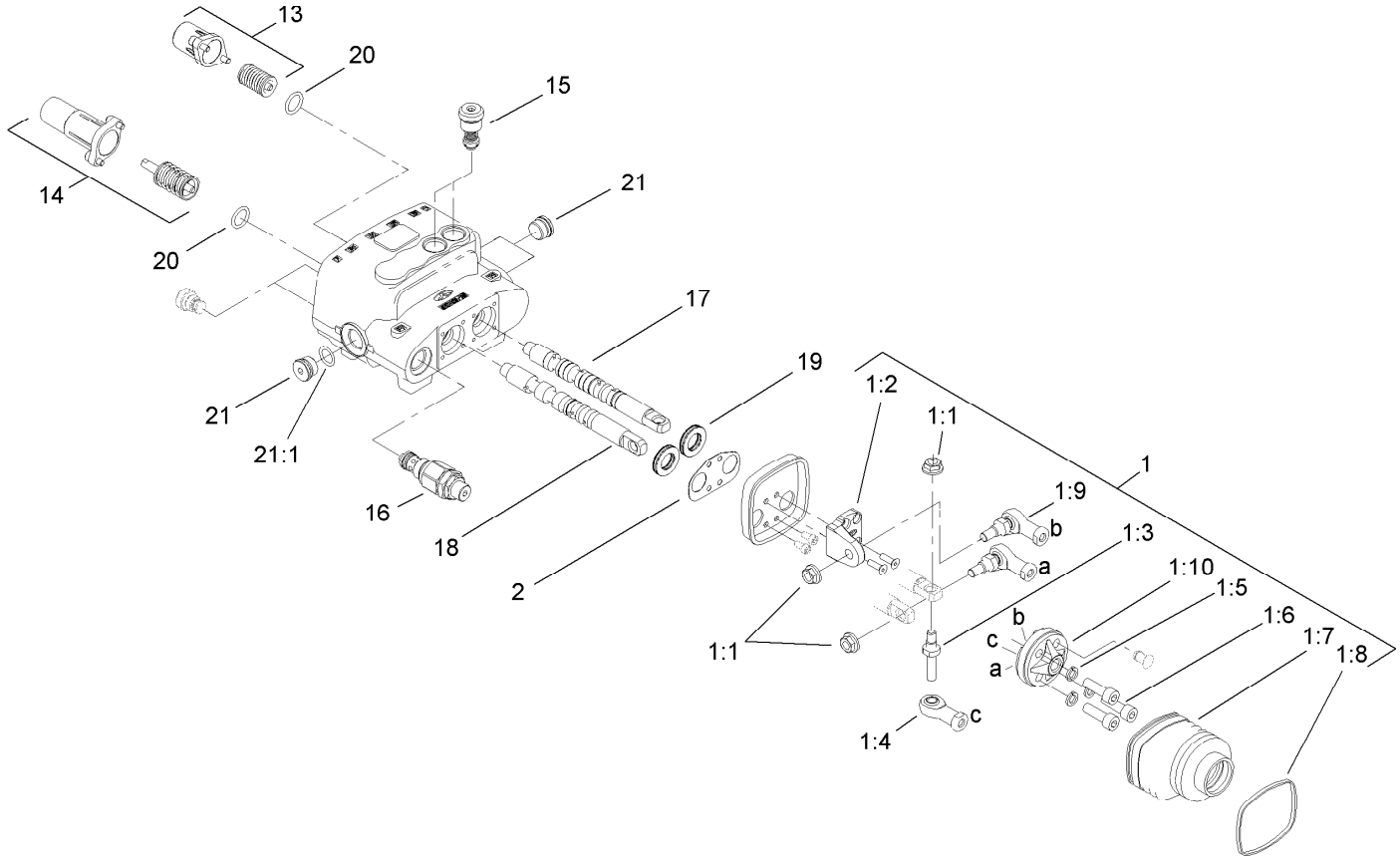

Two Spool Valve Assembly No. 106-9307

Ref.	*Part Number*	*Qty.*	*Description*
1	106-7724	1	Joystick Kit
1:1	98-0668	3	Nut
1:2	106-7726	1	Pivot-Joystick
1:3	106-7727	1	Pin-Joystick
1:4	106-7728	1	End-Rod
1:5	42-9850	3	Washer-Lock, Spring
1:6	98-5828	3	Screw-HSH
1:7	106-7729	1	Bellow-Rubber
1:8	3290-379	1	Tie-Cable
1:9	106-7730	2	Joint-Joystick
1:10	106-7731	1	Holder-Articulated
2	106-7725	1	Seal-Joystick
13	106-7732	1	Valve Spring Kit
14	106-7733	1	Detent Spring Kit
15	106-7734	2	Valve-Relief
16	106-7735	1	Valve-Relief, Main
17	106-7736	1	Spool-Valve
18	106-7737	1	Spool-Valve
19	106-7738	2	Seal-Valve, Spool
20	106-7719	2	Seal-Valve
21	353-988	3	Plug-Hex
21:1	237-79	1	O-Ring

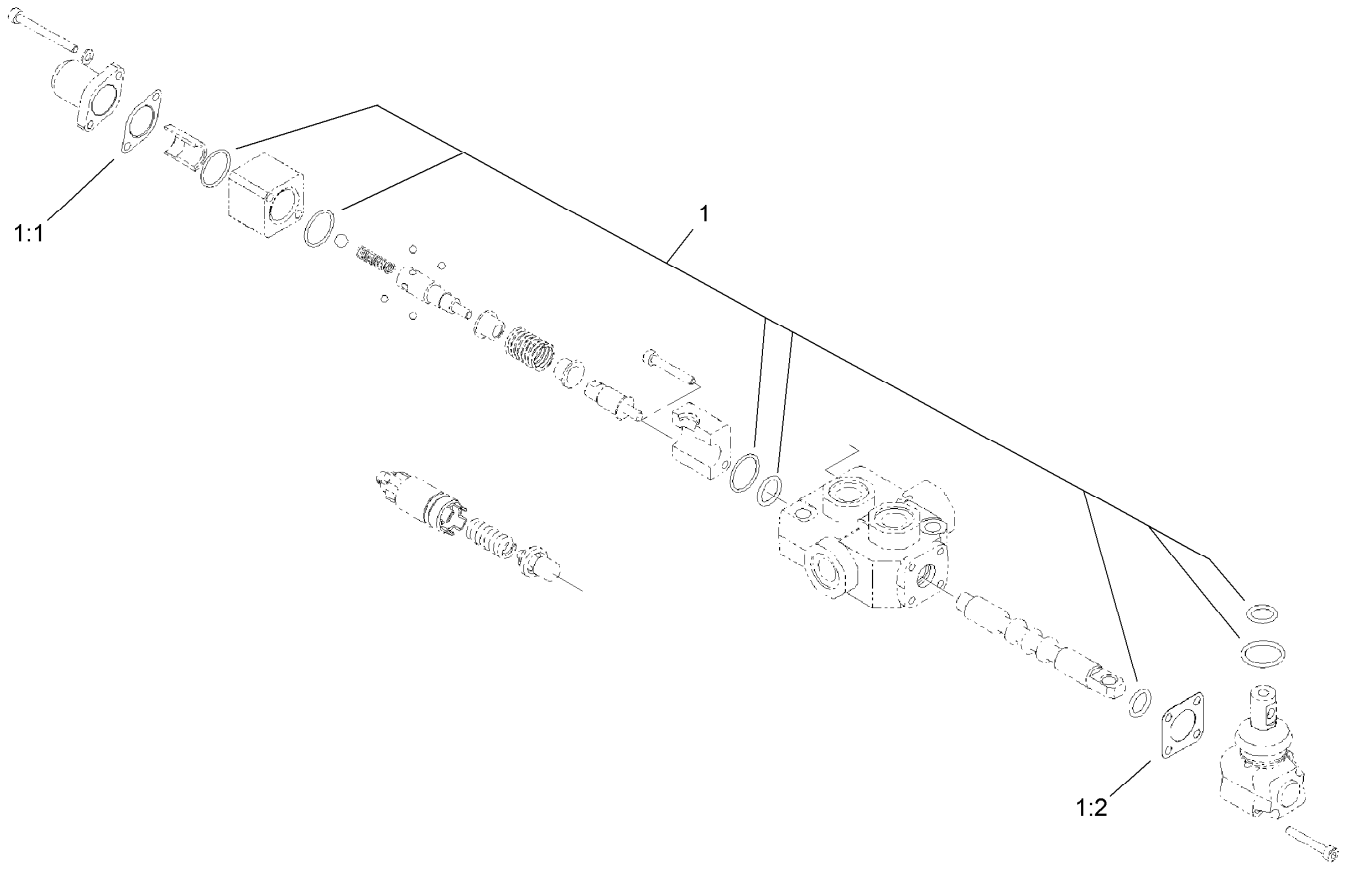

One Spool Valve Assembly No. 104-2831

Ref.	*Part Number*	*Qty.*	*Description*
1	99-4390	1	Seal Kit
1:1	99-3074	4	Gasket
1:2	99-3075	8	Gasket

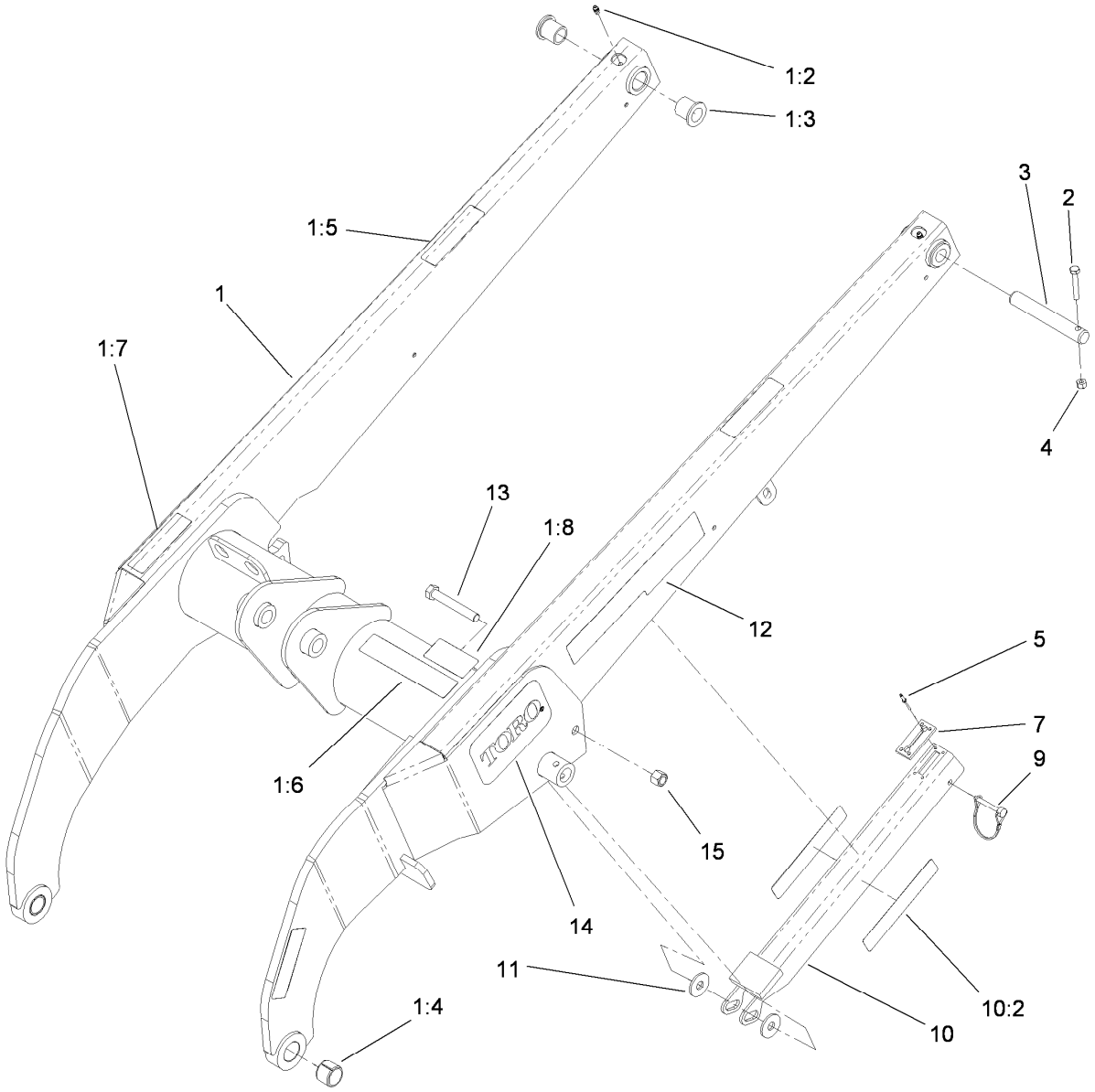

Loader Arm Assembly

Ref.	Part Number	Qty.	Description
1	108-4638	1	Loader Arm ASM
1:2	302-5	2	Fitting-Grease
1:3	95-3577	4	Bushing
1:4	98-4871	2	Bushing-Tension
1:5	100-8821	4	Decal-Warning, Pinch
1:6	115-4856	1	Decal-Caution
1:7	115-4855	1	Decal-Caution
1:8	100-8822	1	Decal-No Rider
2	322-10	7	Screw-HH
3	104-2849	7	Pin-Locking
4	3296-29	7	Nut-Lock, NI

Ref.	Part Number	Qty.	Description
5	95-1687	4	Rivet
7	98-0083	1	Stop-Rubber
9	112-2583	1	Pin-Locking
10	108-4639	1	Locking Arm ASM
10:2	115-4858	2	Decal-Danger
11	68-1440	2	Washer-Rubber
12	115-4869	2	Decal
13	325-14	1	Screw-HH
14	105-1217	2	Decal
15	3296-23	1	Nut-Lock, NI

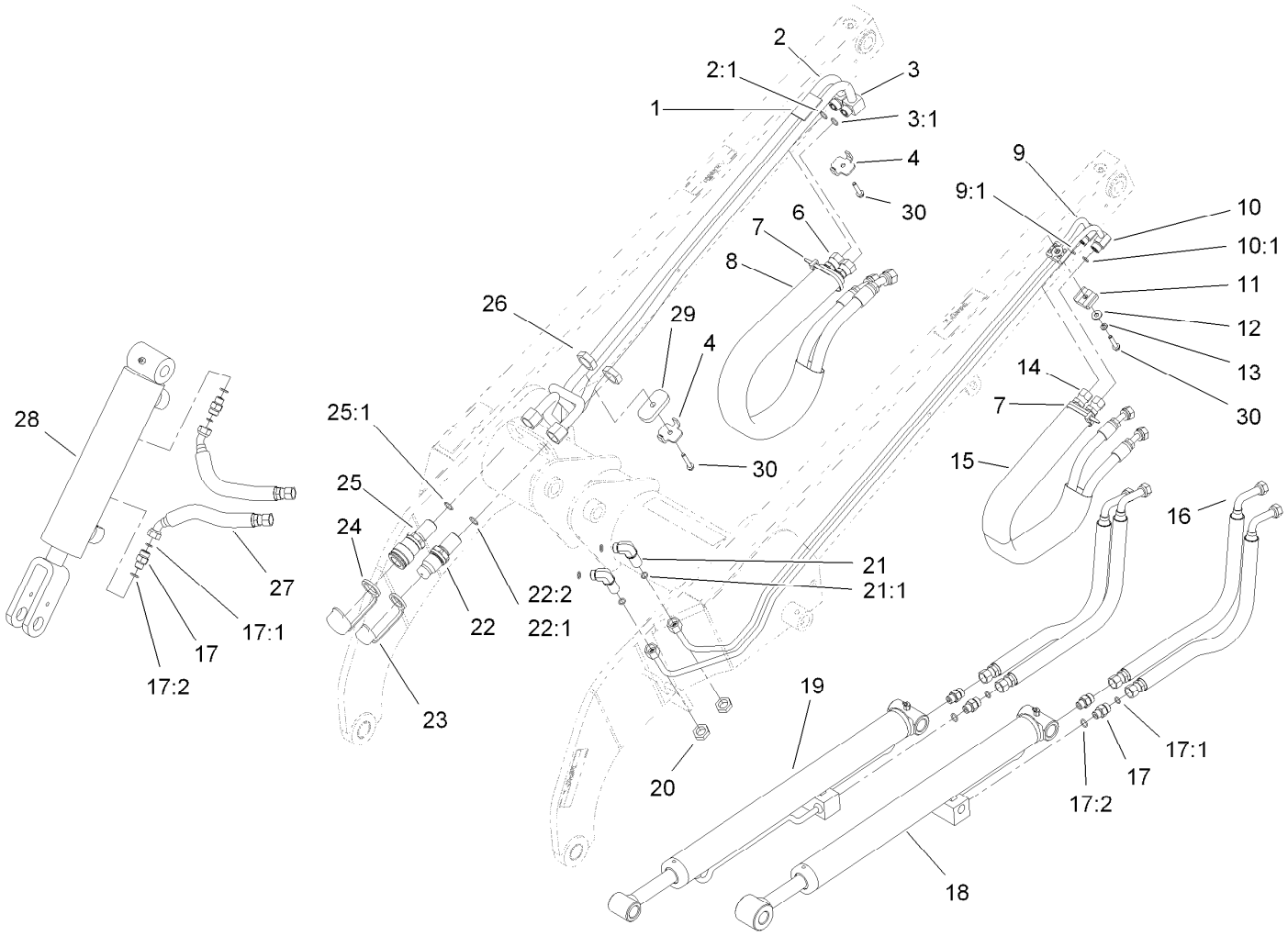

Loader Arm Hydraulic Assembly

Ref.	Part Number	Qty.	Description
1	106-9366	1	Spacer-Hardline
2	108-6319	1	HYD Tube ASM
2:1	237-22	1	O-Ring
3	112-2563	1	HYD Tube ASM
3:1	237-22	1	O-Ring
4	98-0237	2	Plate-Clamp, Tube
6	98-0242	2	Hose-HYD
7	3290-378	2	Tie-Cable
8	100-6128	1	Sleeve-Protective
9	106-9364	1	HYD Tube ASM
9:1	237-22	1	O-Ring
10	106-9365	1	HYD Tube ASM
10:1	237-22	1	O-Ring
11	56-7973	2	Clamp-Tube
12	3256-2	1	Washer-Flat
13	3253-3	1	Washer-Lock
14	98-0213	2	Hose-HYD
15	100-6127	1	Sleeve-Protective

Ref.	Part Number	Qty.	Description
16	98-0216	4	Hose-HYD
17	340-2	6	Fitting-Straight
17:1	237-22	1	O-Ring
17:2	237-42	1	O-Ring
18	104-6267	1	LH Lift Cylinder ASM
19	104-6269	1	RH Lift Cylinder ASM
20	340-70	2	Nut-Lock
21	340-154	2	Union-Bulkhead
21:1	237-22	2	O-Ring
22	105-8395	1	Bulkhead Nipple ASM
22:1	237-65	1	O-Ring
22:2	100-6120	1	Seal Kit ●
23	100-8815	1	Cap-Dust, Nipple
24	100-8816	1	Cap-Dust, Coupler
25	105-8394	1	Bulkhead Coupler ASM
25:1	237-65	1	O-Ring
26	340-74	2	Nut-Lock, Bulkhead
27	98-0207	2	Hose-HYD

● Not illustrated

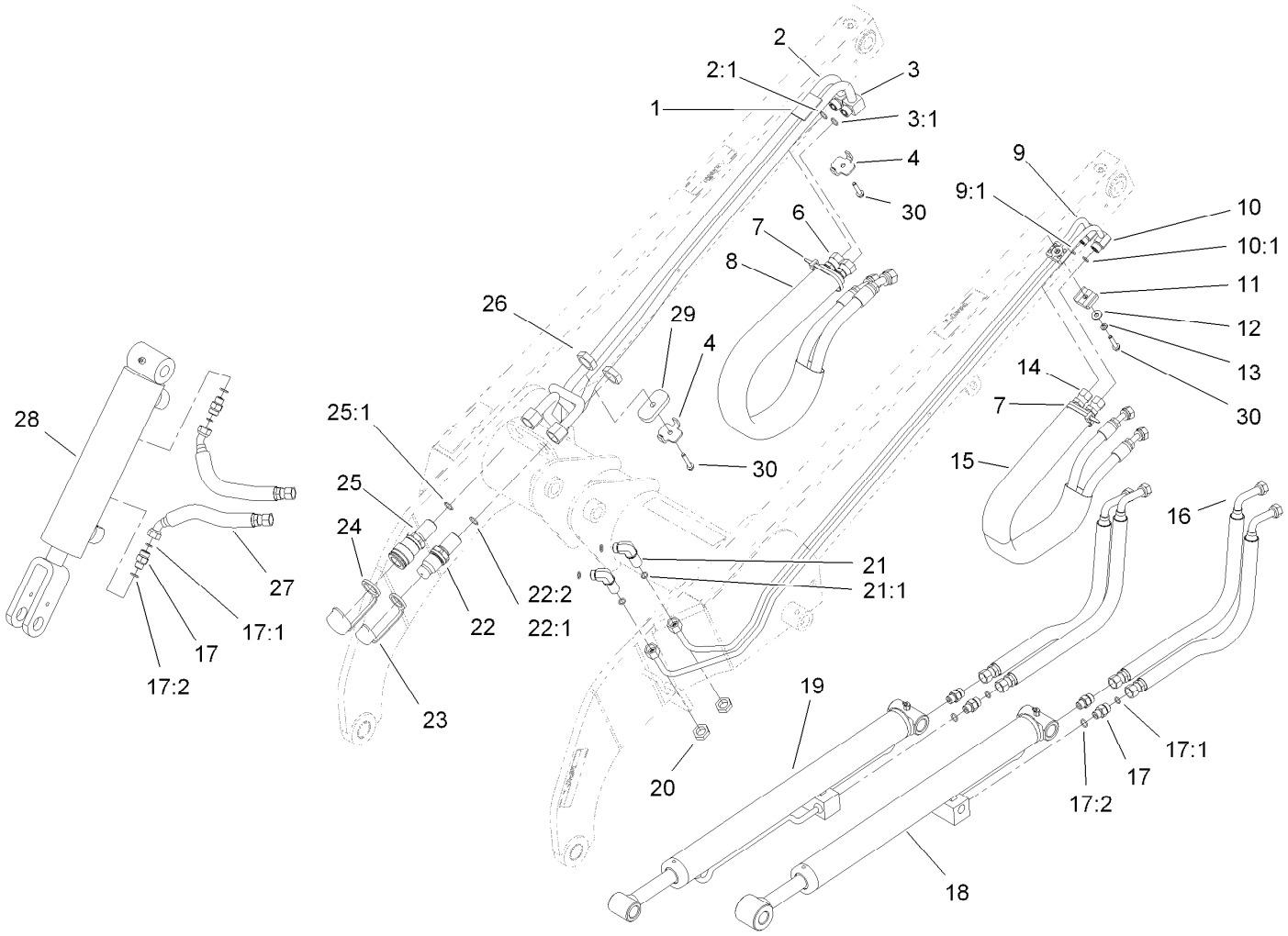

Loader Arm Hydraulic Assembly (continued)

Ref.	*Part Number*	*Qty.*	*Description*
28	105-8370	1	Tilt Cylinder ASM

Ref.	*Part Number*	*Qty.*	*Description*
29	112-2565	1	Plate-Hardline
30	94-2691	3	Screw-HWH Taptite

● Not illustrated

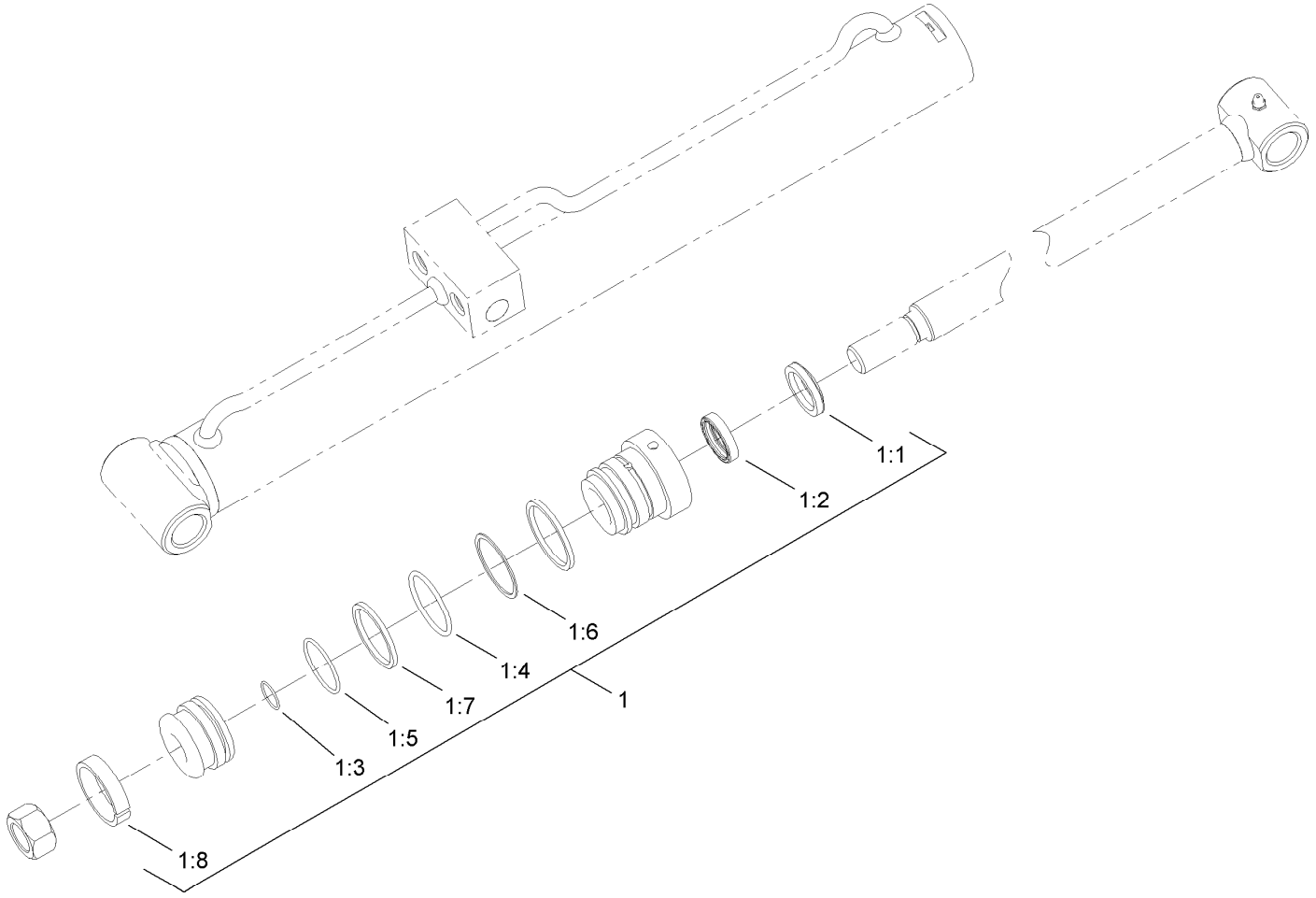

Left Hand Hydraulic Lift Cylinder Assembly No. 104-6267

Ref.	*Part Number*	*Qty.*	*Description*
1	104-6268	1	Seal Kit
1:1		1	Wiper ●
1:2		1	Seal ●
1:3		1	O-Ring ●
1:4		1	O-Ring ●
1:5		1	O-Ring ●
1:6		1	Back-Up ●
1:7		1	Seal ●
1:8		1	Wear Ring ●

● Not serviced separately

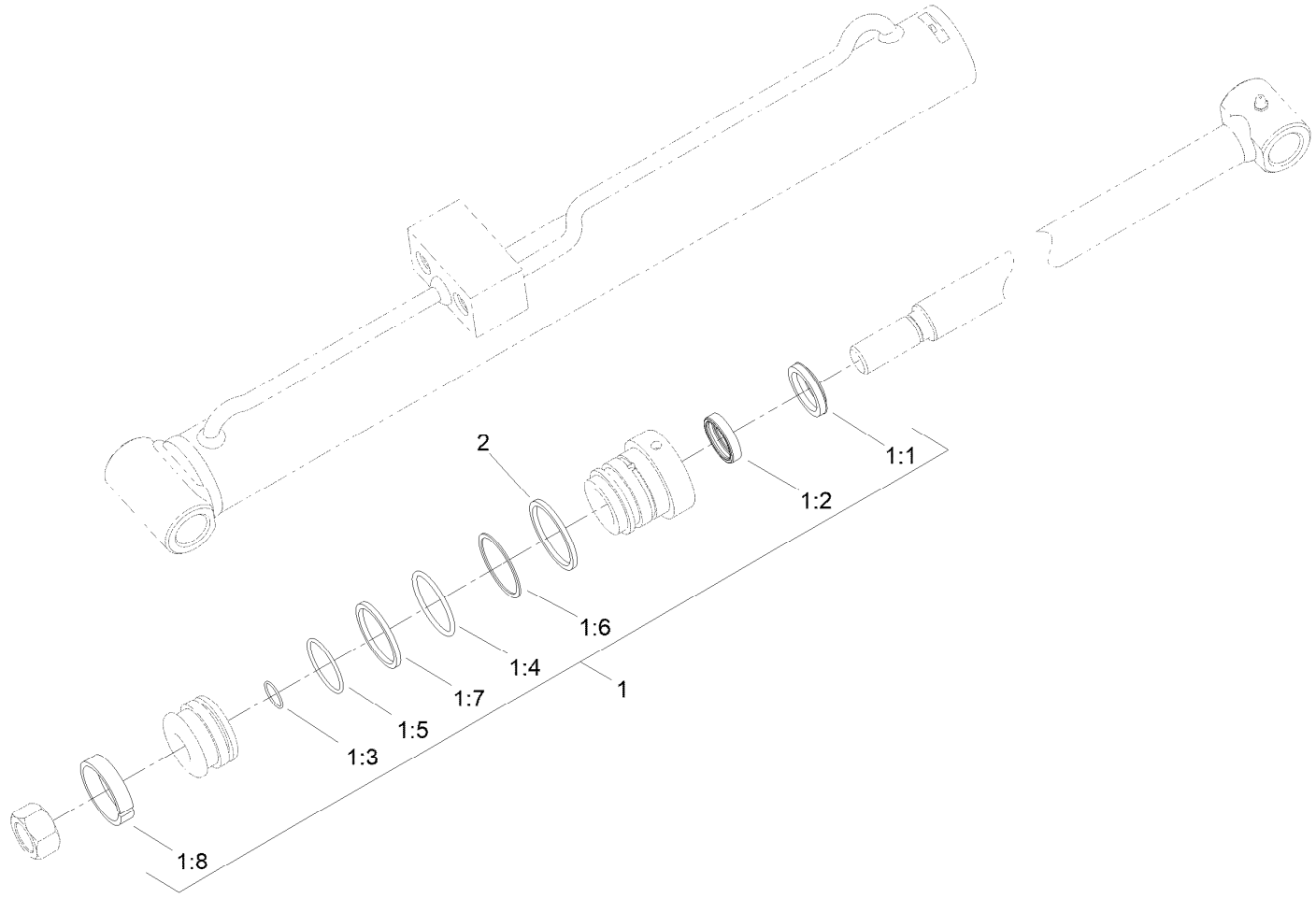

Right Hand Hydraulic Lift Cylinder Assembly No. 104-6269

Ref.	*Part Number*	*Qty.*	*Description*
1	104-6268	1	Seal Kit
1:1		1	Wiper ●
1:2		1	Seal ASM ●
1:3		1	Seal-Dust ●
1:4		1	Seal-Dust ●
1:5		1	Seal-Dust ●
1:6		1	Back-Up ●
1:7		1	Seal ASM ●
1:8		1	Ring-Wear ●
2	161-7281	1	Ring - Retaining

● Not serviced separately

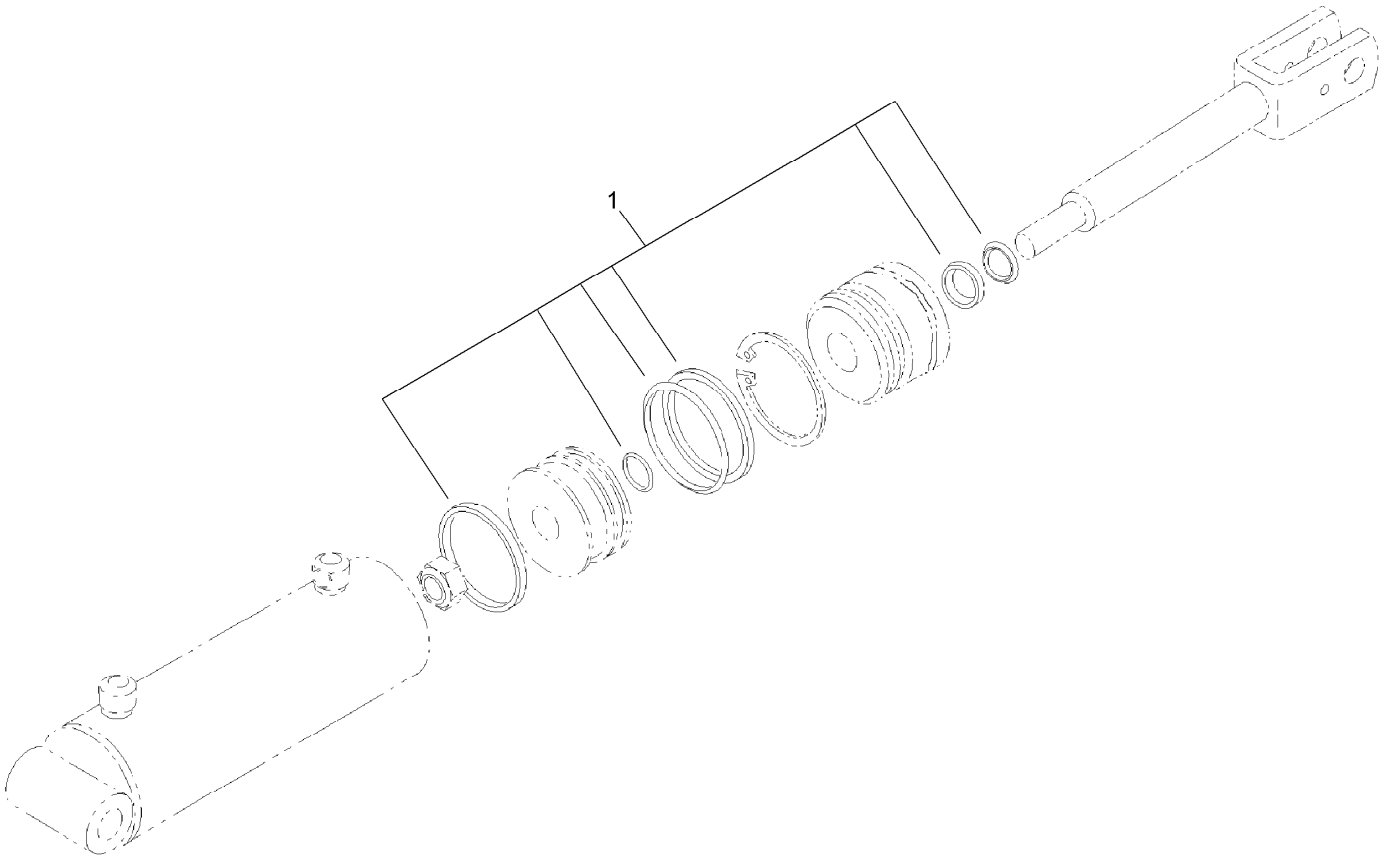

Hydraulic Cylinder Assembly No. 105-8370

Ref.	*Part Number*	*Qty.*	*Description*
1	106-7567	1	Seal Kit

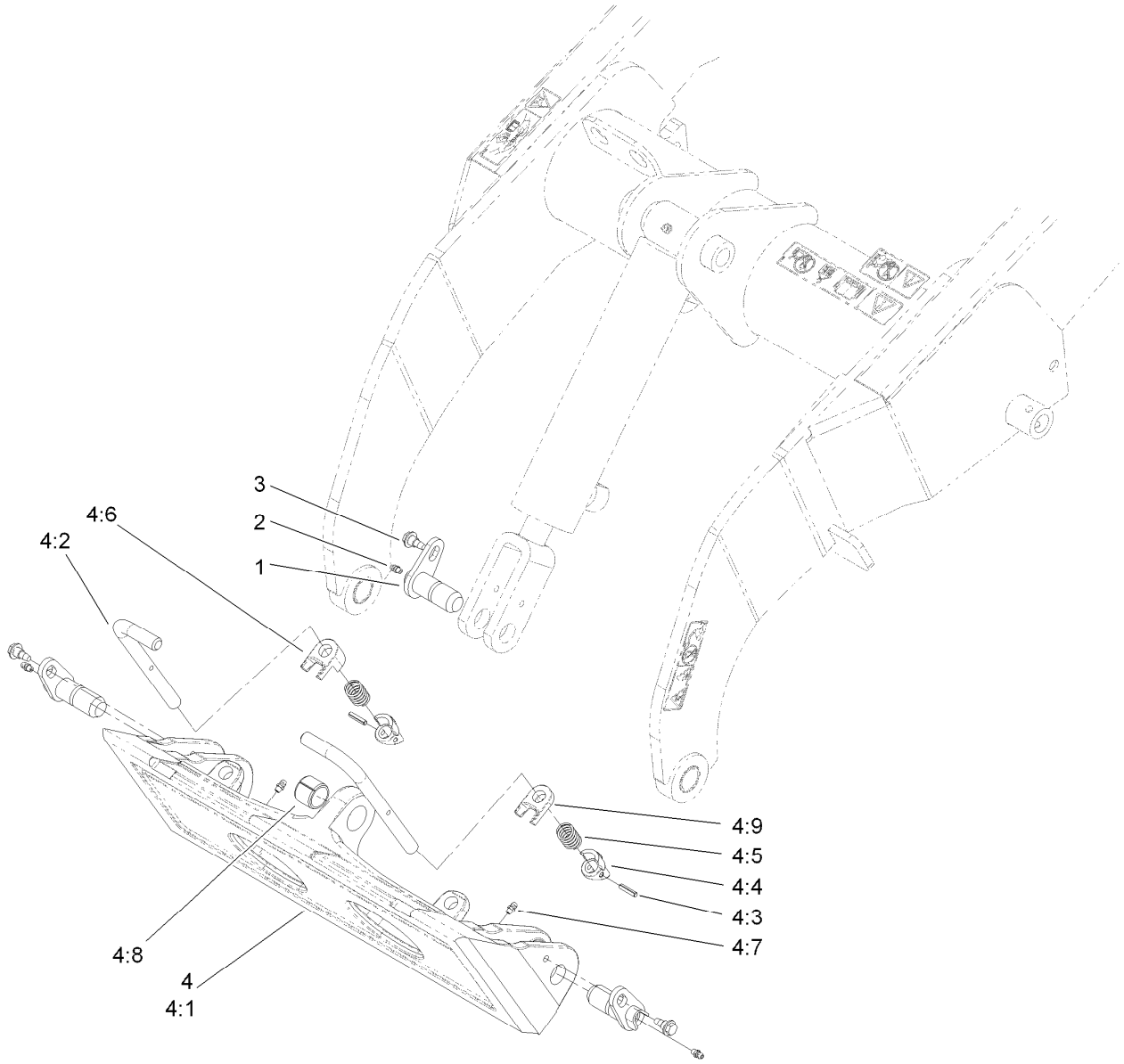

Quick Attach Assembly

Ref.	*Part Number*	*Qty.*	*Description*
1	112-2609	3	Pin-Pivot
2	302-5	3	Fitting-Grease
3	99-5105	3	Screw-Shoulder
4	115-0788	1	Quick Attach ASM
4:1	115-0774-03	1	Mount-Qtach
4:2	105-8367	2	Pin-Locking
4:3	3285-1	2	Pin-Grooved
4:4	105-0246	2	Cam
4:5	98-4694	2	Spring-Compression
4:6	104-5909	1	Stop-RH
4:7	302-5	2	Fitting-Grease
4:8	98-4871	1	Bushing-Tension
4:9	104-5903	1	Stop-LH

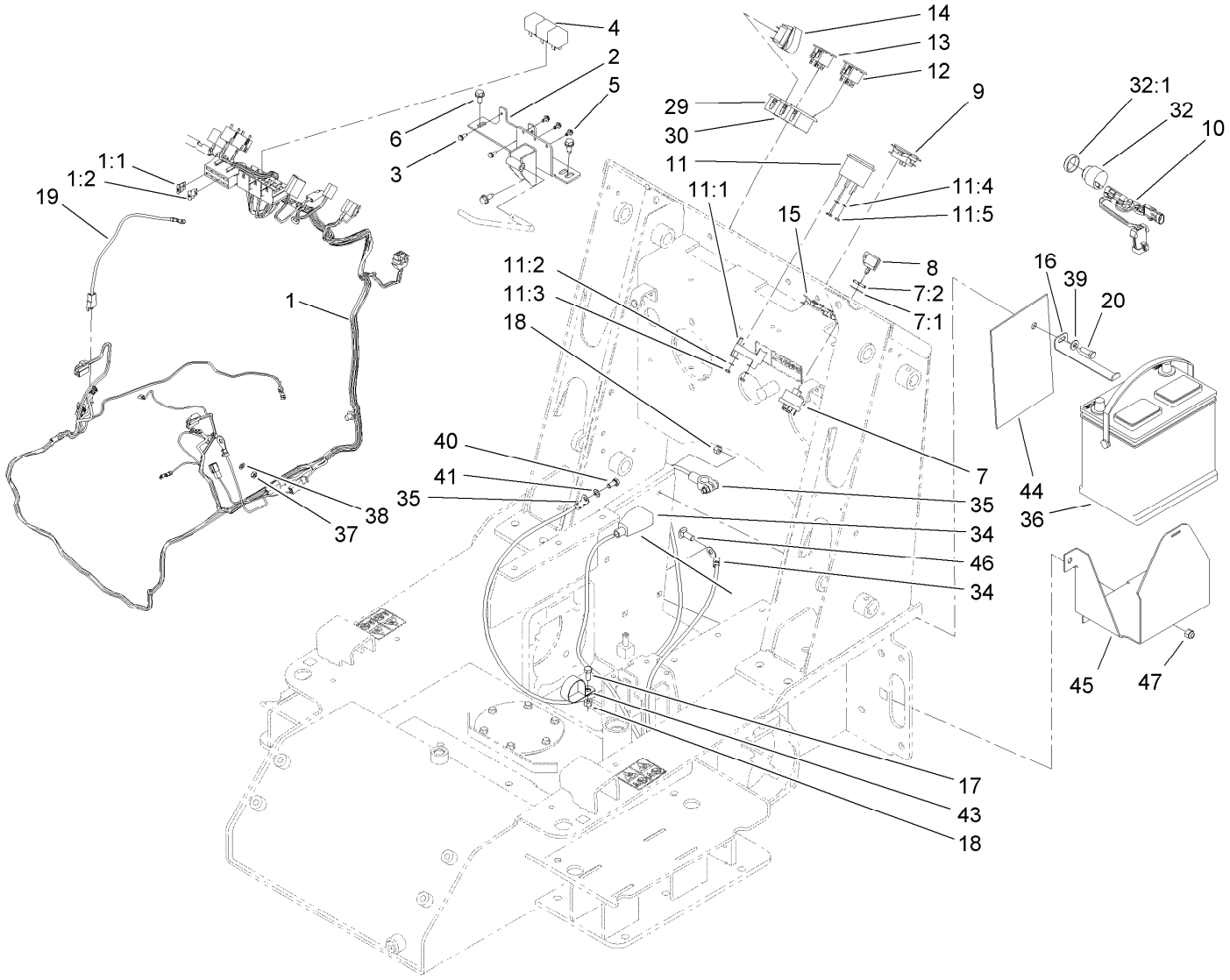

Electrical System Assembly

Ref.	Part Number	Qty.	Description
1	117-1329	1	Harness-Wire
1:1	112-2463	1	Harness-Link, Fusible
1:2	108-6346	1	Harness-Link, Fusible (14FI)
2	108-6360-03	1	Bracket-Relay
3	32104-4	2	Screw
4	98-7249	3	Relay
5	104-2065	3	Screw-HWH
6	32144-11	3	Screw-HWH
7	88-9830	1	Key Switch ASM
7:1	3254-5	1	Washer-Lock
7:2	218-461	1	Nut-HH
8	63-8360	2	Key-Ignition
9	120-2244	1	Hourmeter
10	115-0730	1	Harness-Wire, Neutral
11	66-2940	1	Gauge-Fuel
11:1	100-6147	1	Bracket-Mounting, Gauge
11:2	3254-1	2	Washer-Lock, Int
11:3	3217-27	2	Nut-Hex
11:4	3255-24	3	Washer-Lock / EXT
11:5	3217-16	3	Nut-Hex
12	100-8070	1	Lamp-Warning

Ref.	Part Number	Qty.	Description
13	100-8071	1	Lamp-Warning
14	110-0811	1	Switch-Rocker On-None-(On)
15	104-4234	1	Clip-Mounting
16	108-6275-03	1	Clamp-Battery
17	322-3	1	Screw-HH
18	3296-29	2	Nut-Lock, NI
19	108-6365	1	Harness-Wire
20	322-5	1	Screw-HH
29	108-6325	2	Bracket-End
30	108-6326	1	Bracket-Middle
32	80-9330	1	Audio Alarm ASM
32:1	104-5107	1	Nut-Plastic, Knurled
34	108-6327	1	Cable-Battery, Positive
35	108-6328	1	Cable-Battery, Negative
36	104-9979	1	Battery
37	43-2830	1	Nut-Hex
38	43-5930	1	Washer-Lock, Spring
39	3256-2	1	Washer-Flat
40	33104-016	1	Screw-HHF
41	3255-8	1	Washer-Lock

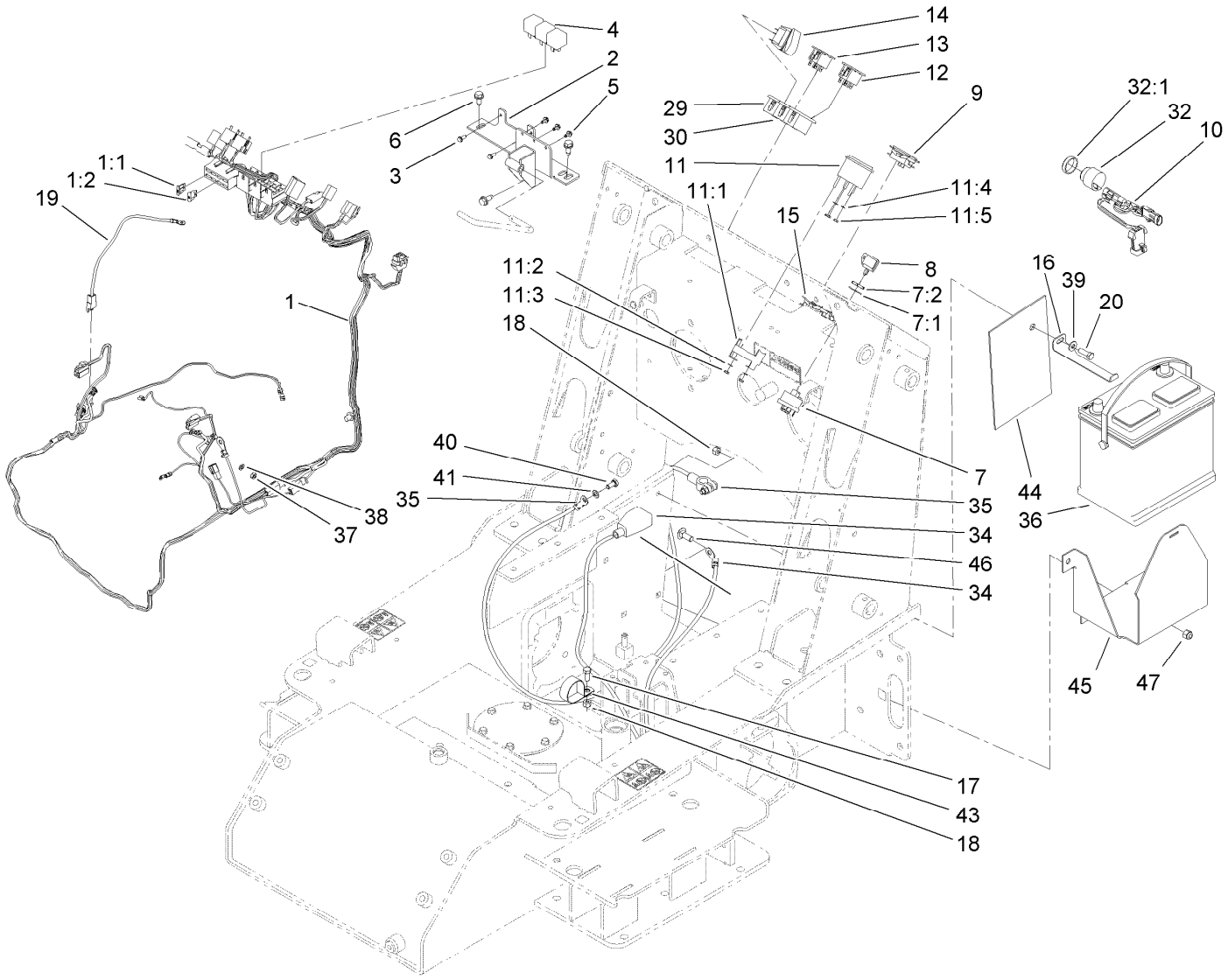

Electrical System Assembly (continued)

Ref.	Part Number	Qty.	Description
43	2412-147	1	Clamp-R
44	108-6392	1	Guard-Battery
45	108-6274-01	1	Mount-Battery
46	3231-2	3	Bolt-CARR
47	3296-39	3	Nut-Lock, NI

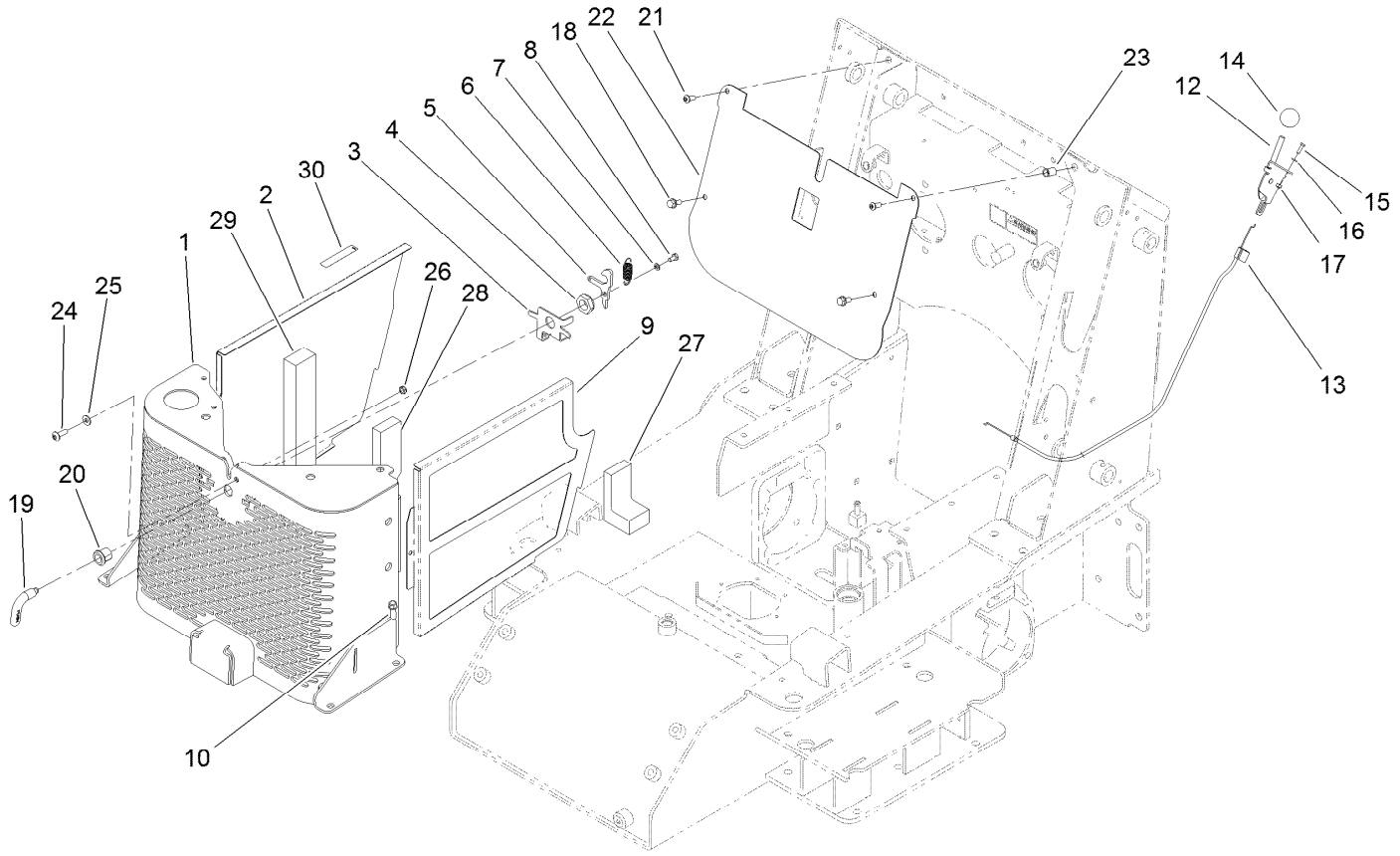

Grill Assembly

Ref.	Part Number	Qty.	Description
1	117-1318-03	1	Grill
2	117-9963-03	1	RH Side Panel
3	106-5729-03	1	Bracket-Latch
4	3296-60	1	Nut-Lock, NI
5	106-5728	1	Cam-Latch
6	104-0869	1	Spring
7	3253-3	1	Washer-Lock
8	321-2	1	Screw-HH
9	117-9964-03	1	LH Side Panel
10	95-1726	4	Screw-Taptite
12	108-9730	1	Lever-Control
13	108-6337	1	Cable-Throttle
14	233-42	1	Knob
15	3290-134	2	Screw
16	3256-51	2	Washer-Flat

Ref.	Part Number	Qty.	Description
17	32149-7	2	Nut-Keps
18	3234-5	2	Screw-HHF
19	108-5639	1	Handle-Latch
20	106-9335	1	Housing-Latch
21	3274-55	2	Screw-HSBH
22	108-6225	1	Baffle-Electrical
23	32148-8	2	Nut-Clinch
24	107-8021	1	Screw-PTH
25	3256-2	1	Washer-Flat
26	3296-47	1	Nut-Lock,NI
27	108-6375	2	Seal-Foam
28	108-6371	2	Seal-Foam
29	108-6369	1	Seal-Foam
30	93-6681	1	Decal-Warning, Fan

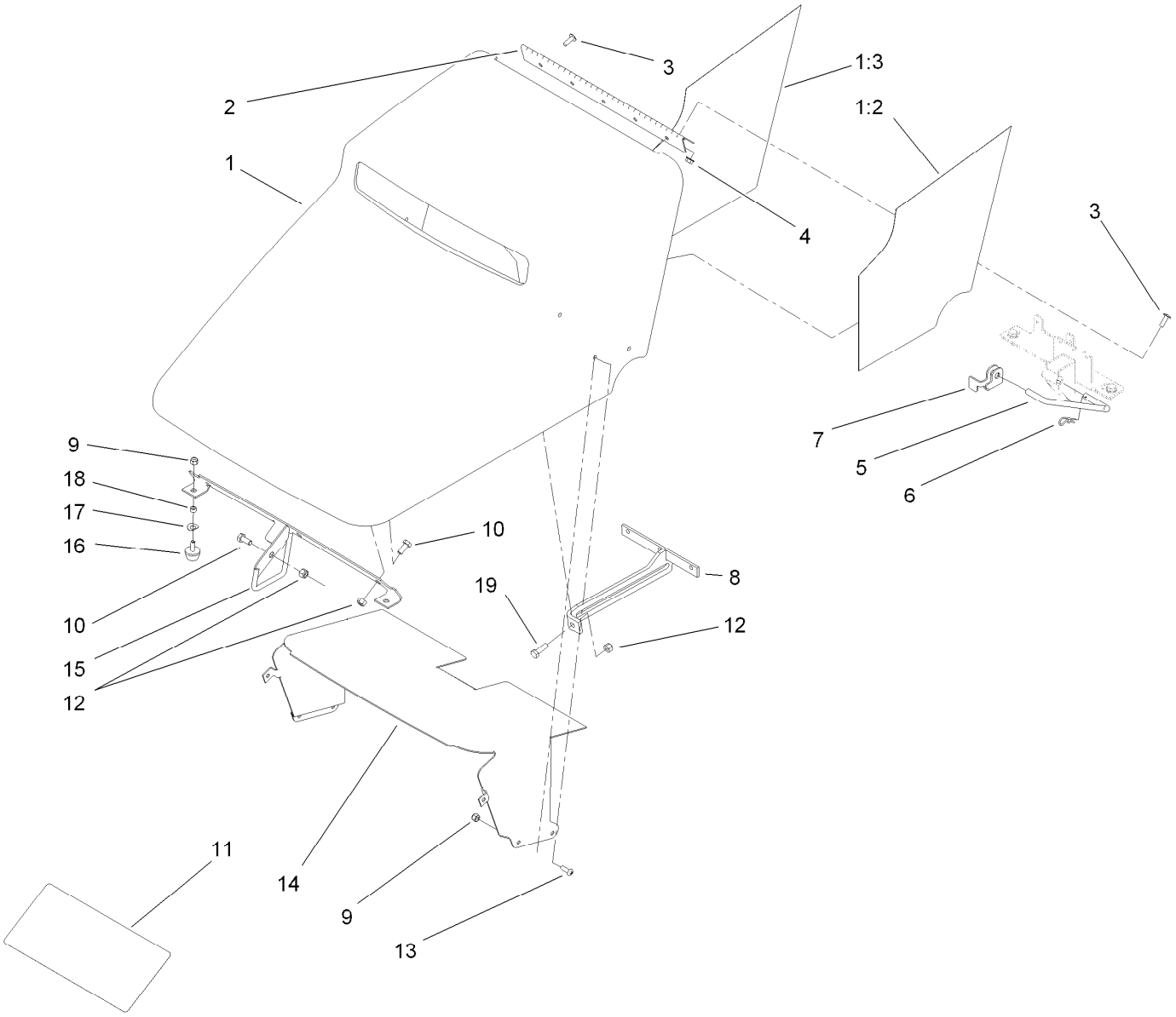

Hood Assembly

Ref.	Part Number	Qty.	Description
1	112-2460	1	Hood ASM
1:2	112-2464	1	Foiltape-LH
1:3	112-2465	1	Foiltape-RH
2	100-1284	1	Hinge-Hood
3	9114604	9	Screw-Head, Truss
4	32128-33	4	Nut-HF
5	108-6357	1	Rod-Support, Hood
6	3290-250	1	Pin-Cotter
7	115-0714	1	Bracket-Latch, Locking
8	112-2448-03	1	Bracket-Rod, Prop
9	3296-42	13	Nut-Lock, NI

Ref.	Part Number	Qty.	Description
10	322-3	5	Screw-HH
11	117-1807	1	Decal-Service
12	3296-29	5	Nut-Lock, NI
13	3258-166	6	Screw-PRH
14	108-6286	1	Baffle-Hood
15	108-6287-03	1	Rod Latch ASM
16	1-523420	2	Bumper
17	3290-301	2	Washer-Spring
18	106-9308	2	Spacer
19	322-5	1	Screw-HH

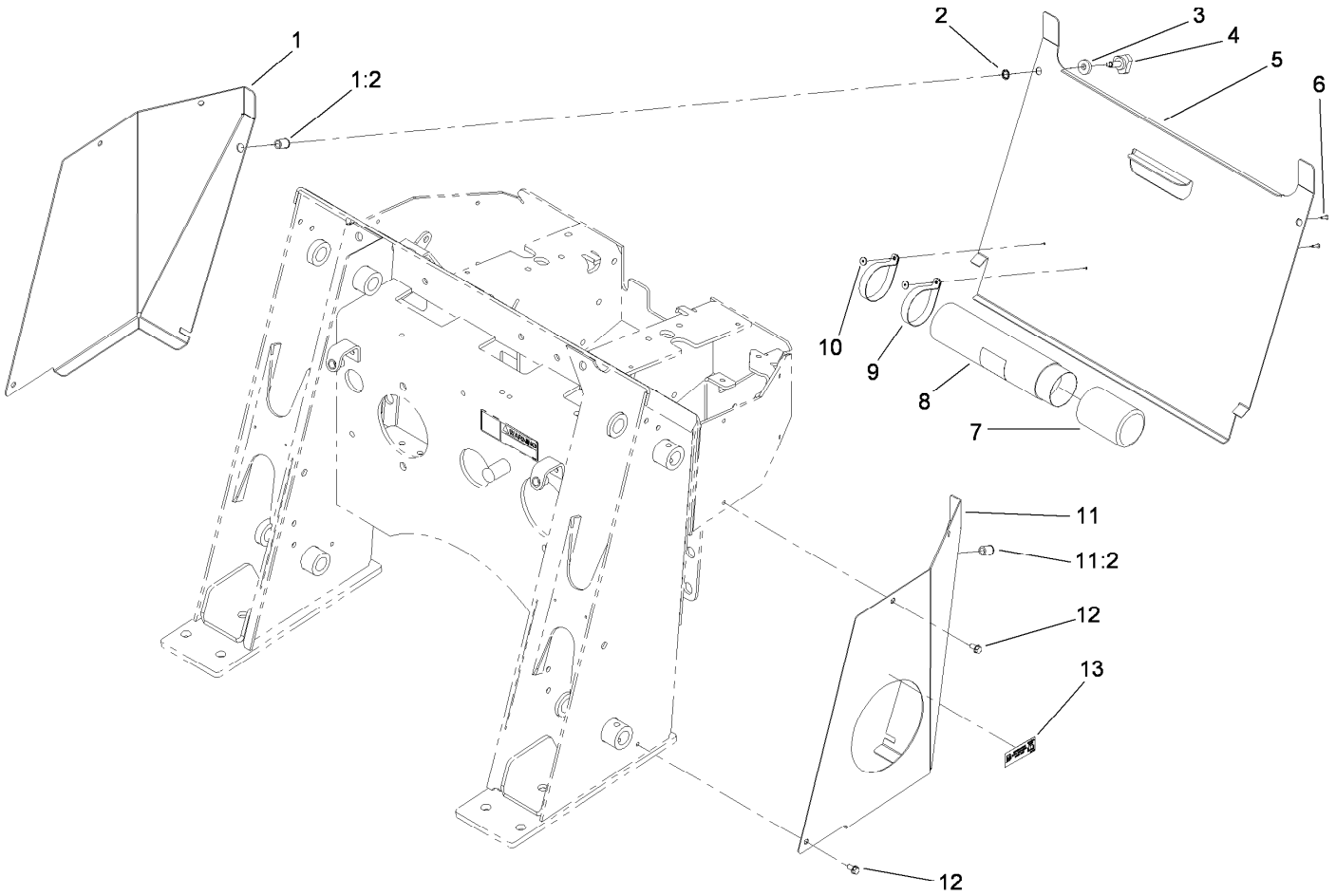

Rear Access Cover Assembly

Ref.	*Part Number*	*Qty.*	*Description*
1	106-9342	1	RH Rear Cover Support ASM
1:2	32148-9	1	Nut-Clinch
2	32151-72	2	Ring-Retaining
3	106-0565	2	Washer-Rubber
4	95-9648	2	Knob
5	106-9339-01	1	Cover-Access, Rear
6	3269-17	2	Rivet-Pop
7	104-7048	1	Cap-Housing
8	104-7050	1	Tube-Manual
9	2412-120	2	Clamp-R
10	3269-10	2	Washer-Back
11	106-9343	1	LH Rear Cover Support ASM
11:2	32148-9	1	Nut-Clinch
12	9266714	6	Screw-HWH
13	114-9600	1	Decal-Low Sulfur

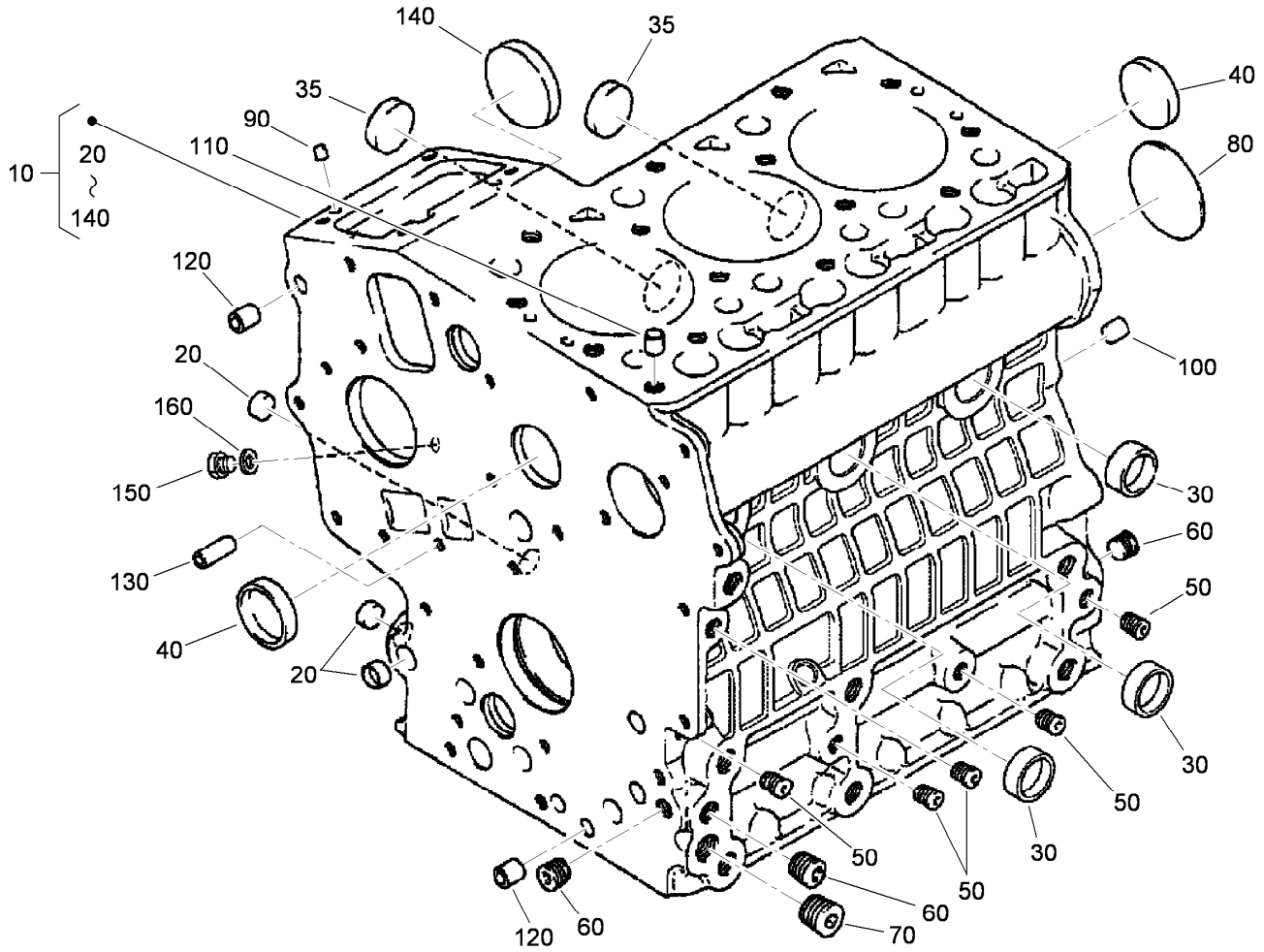

Crankcase Assembly

Ref.	*Part Number*	*Qty.*	*Description*
10	117-0301	1	Crankcase ASM
20	100-2019	3	Cap-Sealing
30	100-2020	3	Cap-Sealing
35	110-3702	2	Cap-Sealing
40	98-9398	2	Cap-Sealing
50	98-9687	5	Plug
60	98-7487	3	Plug
70	98-7488	1	Plug
80	100-1851	1	Plug-Expansion
90	98-9375	2	Pin-Straight
100	98-9377	2	Pin-Straight
110	98-7506	1	Pin-Pipe
120	98-9387	2	Pin-Pipe
130	100-2051	2	Pin-Pipe
140	100-1991	1	Cover-Fuel, Camshaft
150	99-3447	1	Plug
160	112-8325	1	Washer

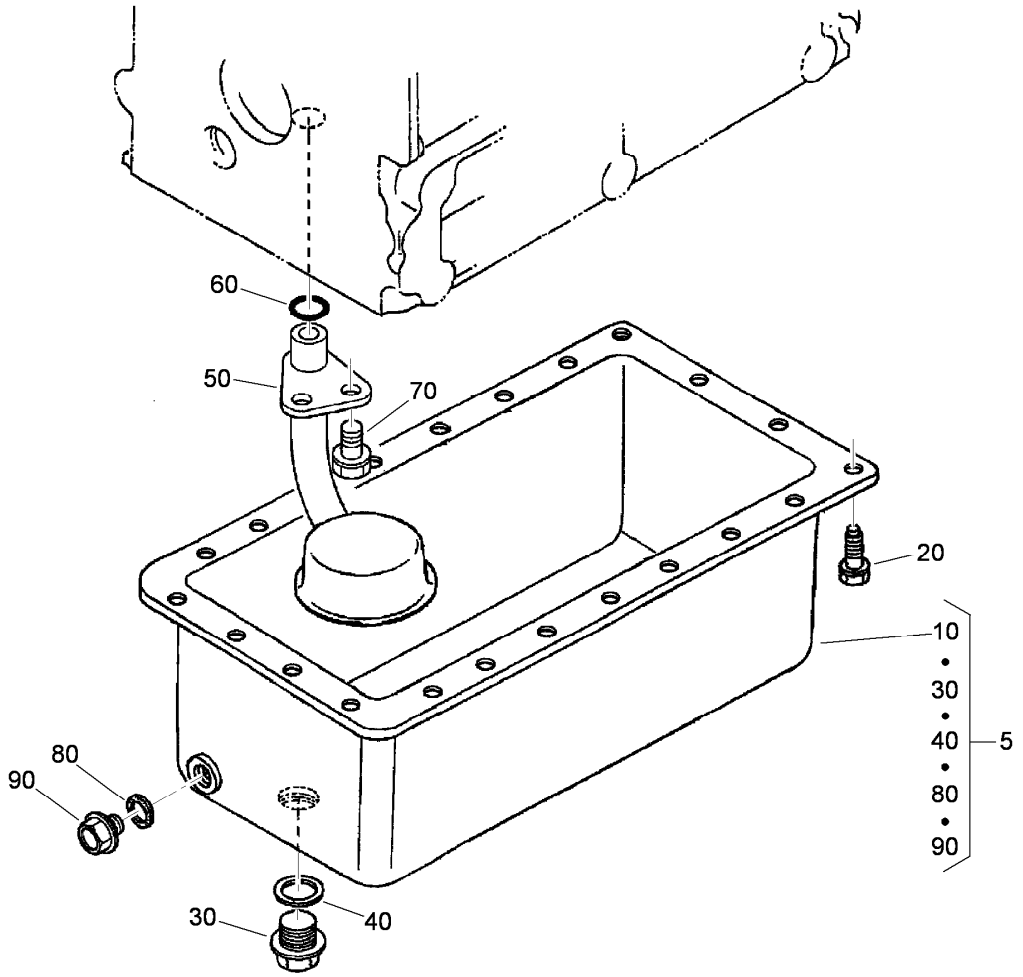

Oil Pan Assembly

Ref.	*Part Number*	*Qty.*	*Description*
5	112-8327	1	Oil Pan Kit
10	112-2523	1	Pan-Oil
20	117-0302	22	Bolt
30	98-9686	1	Plug-Drain
40	110-9715	1	Gasket-Pan, Oil
50	100-2001	1	Strainer-Pickup, Oil
60	105-3776	1	O-Ring
70	100-9195	1	Bolt
80	98-7524	1	Gasket
90	114-8151	1	Plug-Drain

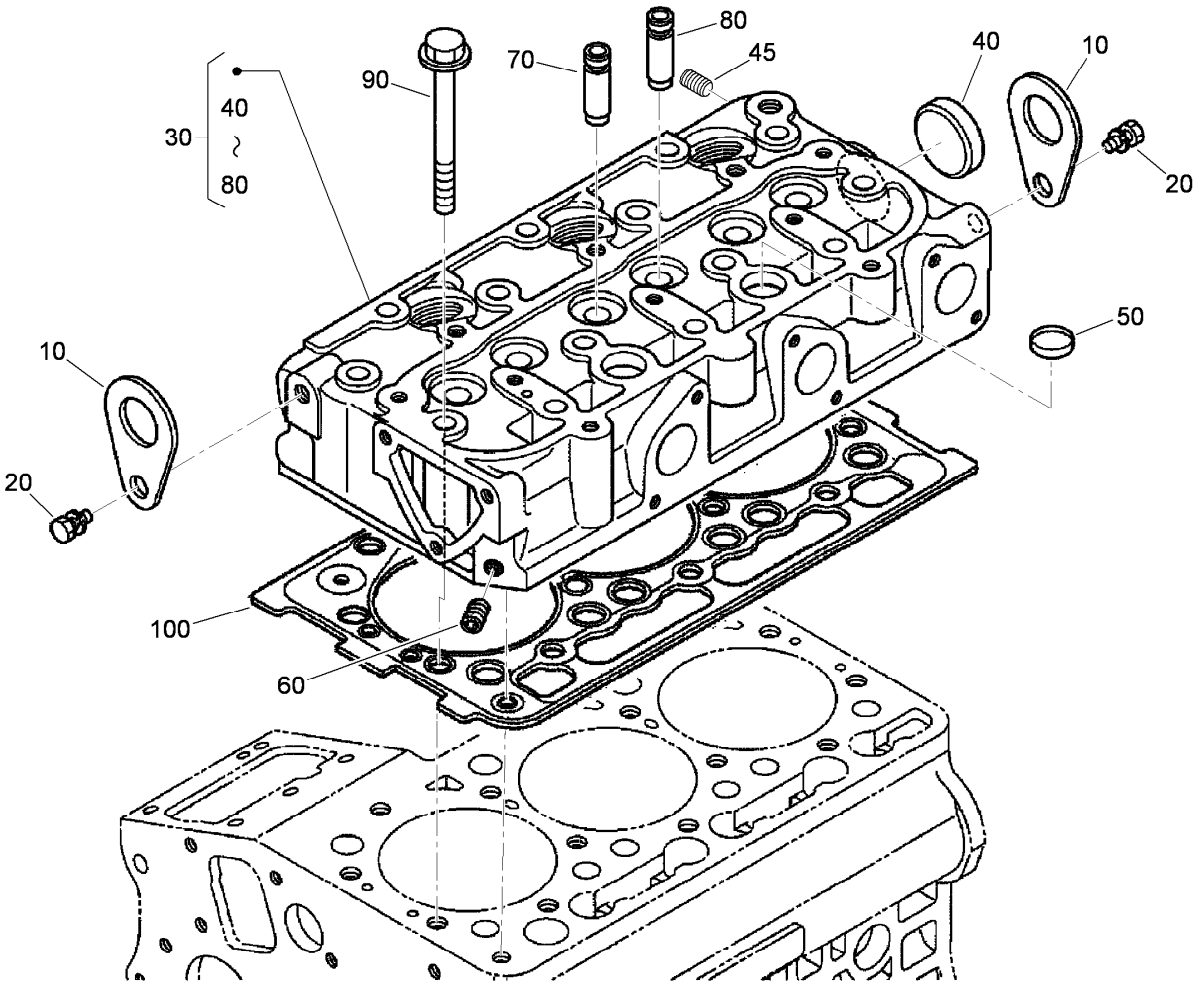

Cylinder Head Assembly

Ref.	*Part Number*	*Qty.*	*Description*
10	98-7531	2	Hook-Engine
20	98-7526	2	Bolt
30	112-8329	1	Head-Cylinder
40	105-3705	1	Cap-Sealing
45	98-9444	1	Plug
50	98-9389	2	Cap-Sealing
60	98-7540	1	Plug
70	100-1882	3	Guide-Valve, Inlet
80	100-1883	3	Guide-Valve, Exhaust
90	100-1820	14	Bolt-Head, Cylinder
100	112-2520	1	Gasket-Head, Cylinder

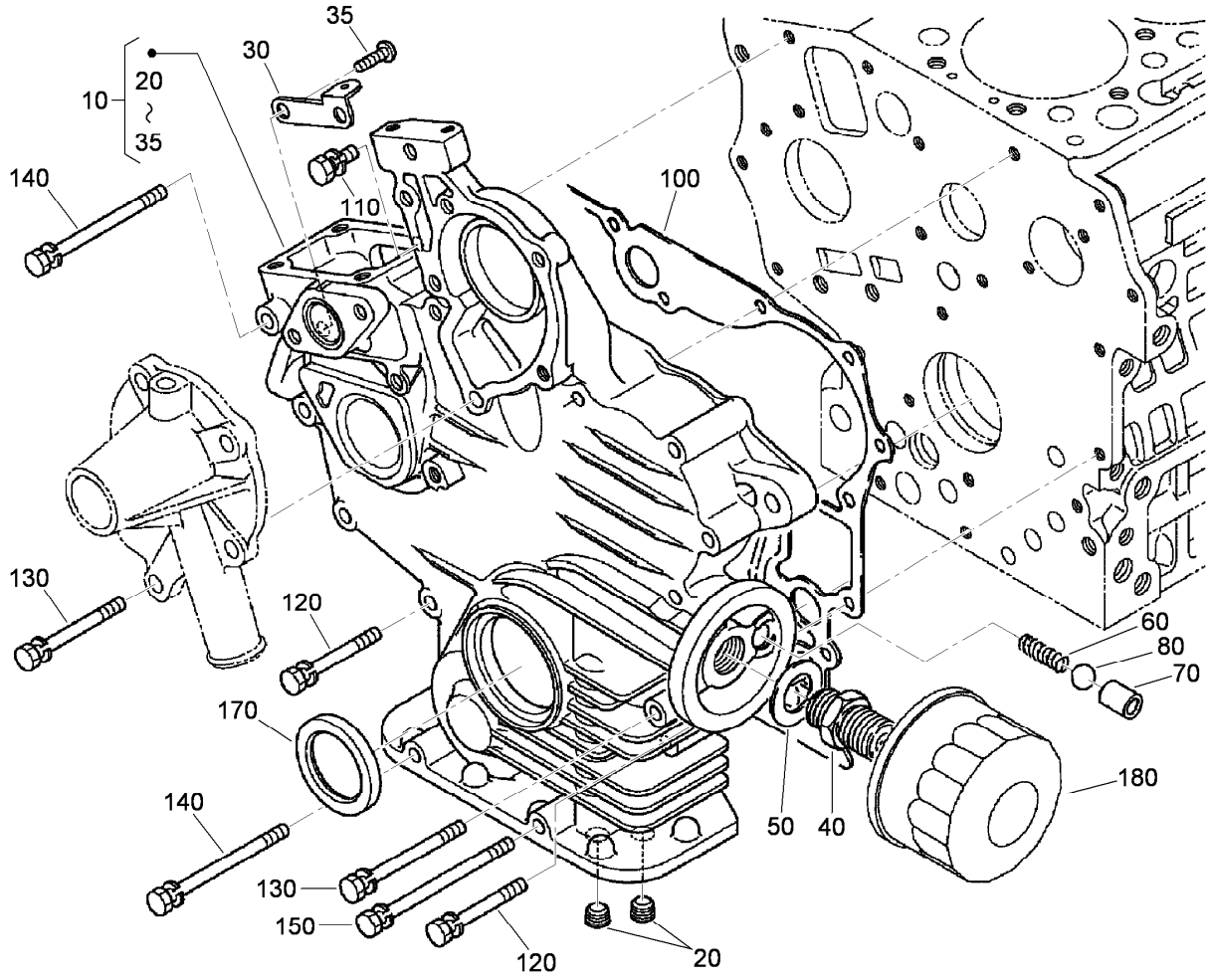

Gear Case and Oil Filter Cartridge Assembly

Ref.	*Part Number*	*Qty.*	*Description*
10	117-1702	1	Gear Case ASM
20	98-7488	2	Plug
30	110-3708	1	Stay-Spring, Start
35	100-2040	2	Screw
40	98-9388	1	Joint-Pipe
50	100-1926	1	Washer-Plain
60	100-2004	1	Spring
70	100-1894	1	Seat-Valve
80	100-1792	1	Ball
100	117-0327	1	Gasket-Case, Gear
110	98-7605	1	Bolt
120	105-3797	9	Bolt
130	100-1922	2	Bolt
140	98-9357	2	Bolt
150	110-3710	1	Bolt
170	100-1971	1	Seal-Oil
180	100-1892	1	Cartridge-Filter, Oil

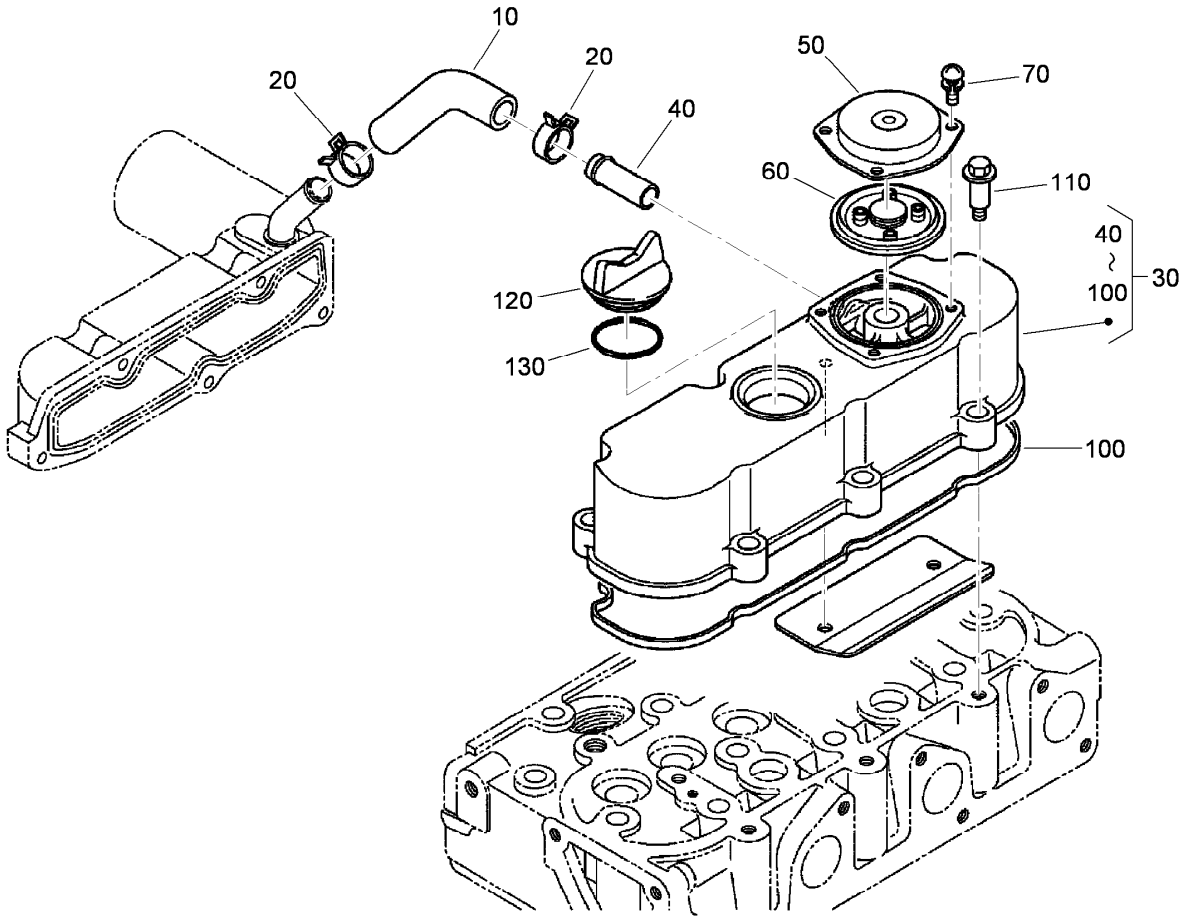

Cylinder Head Cover Assembly

Ref.	*Part Number*	*Qty.*	*Description*
10	110-3711	1	Tube-Breather
20	110-3712	2	Clamp-Hose
30	112-8332	1	Cylinder Head Cover ASM
40	98-9580	1	Pipe-Return, Water
50	110-3714	1	Cover-Breather
60	110-3715	1	Valve-Breather
70	98-9364	4	Screw (With Washer)
100	112-2521	1	Gasket-Cover, Head
110	108-7063	4	Bolt
120	107-9075	1	Plug-Filler, Oil
130	99-3446	1	O-Ring

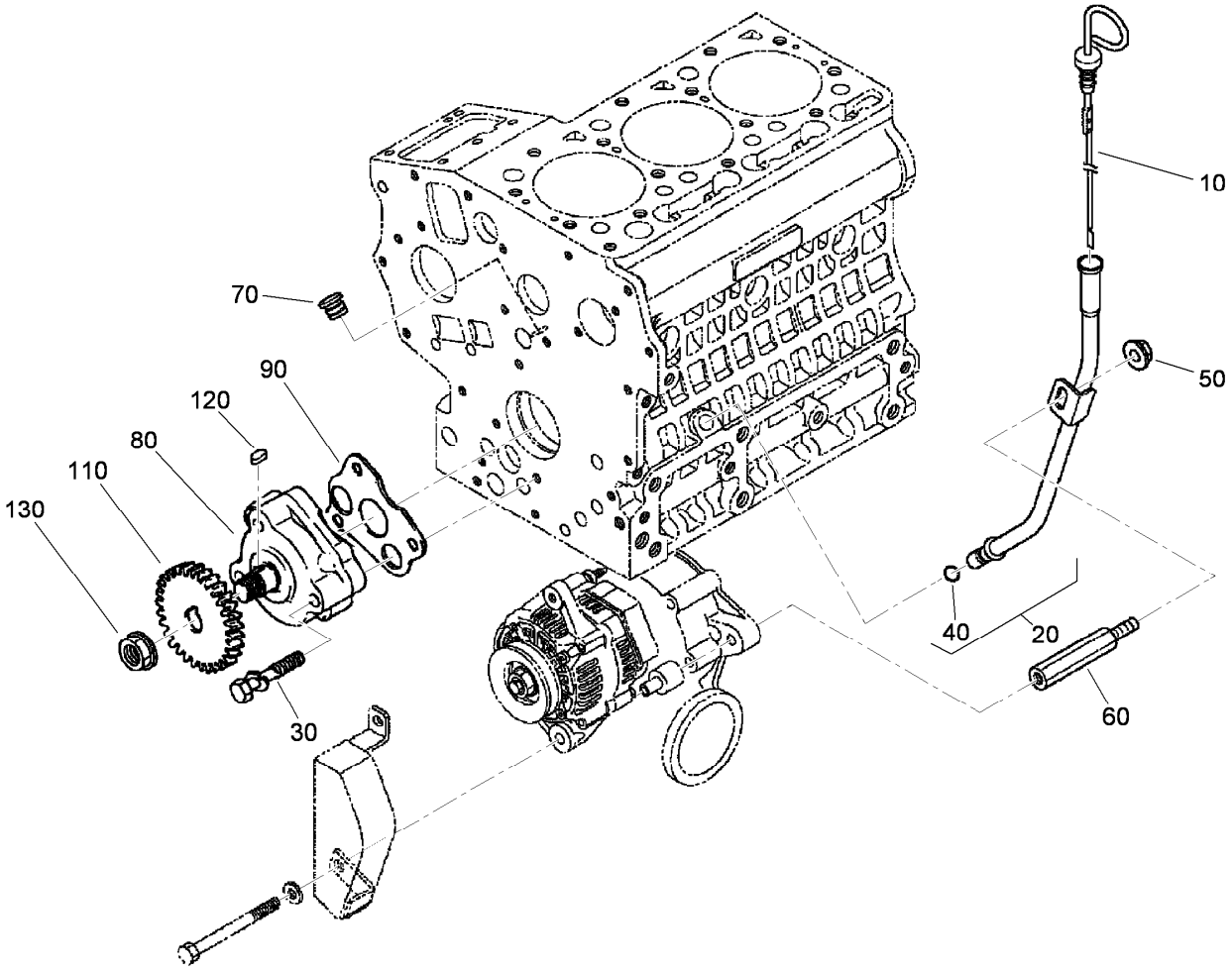

Dipstick, Guide and Oil Pump Assembly

Ref.	*Part Number*	*Qty.*	*Description*
10	112-2489	1	Gauge-Oil
20	112-2490	1	Oil Gauge Guide ASM
30	100-1923	1	Bolt
40	98-9722	3	O-Ring
50	112-2492	1	Nut-Flange
60	112-2493	1	Support-Guide, Gauge
70	110-3720	1	Plug-Gauge, Oil
80	100-2002	1	Oil Pump ASM
90	100-2003	1	Gasket-Pump, Oil
110	100-1893	1	Gear-Drive, Oil Pump
120	98-7658	1	Key-Feather
130	100-1779	2	Nut-Flange

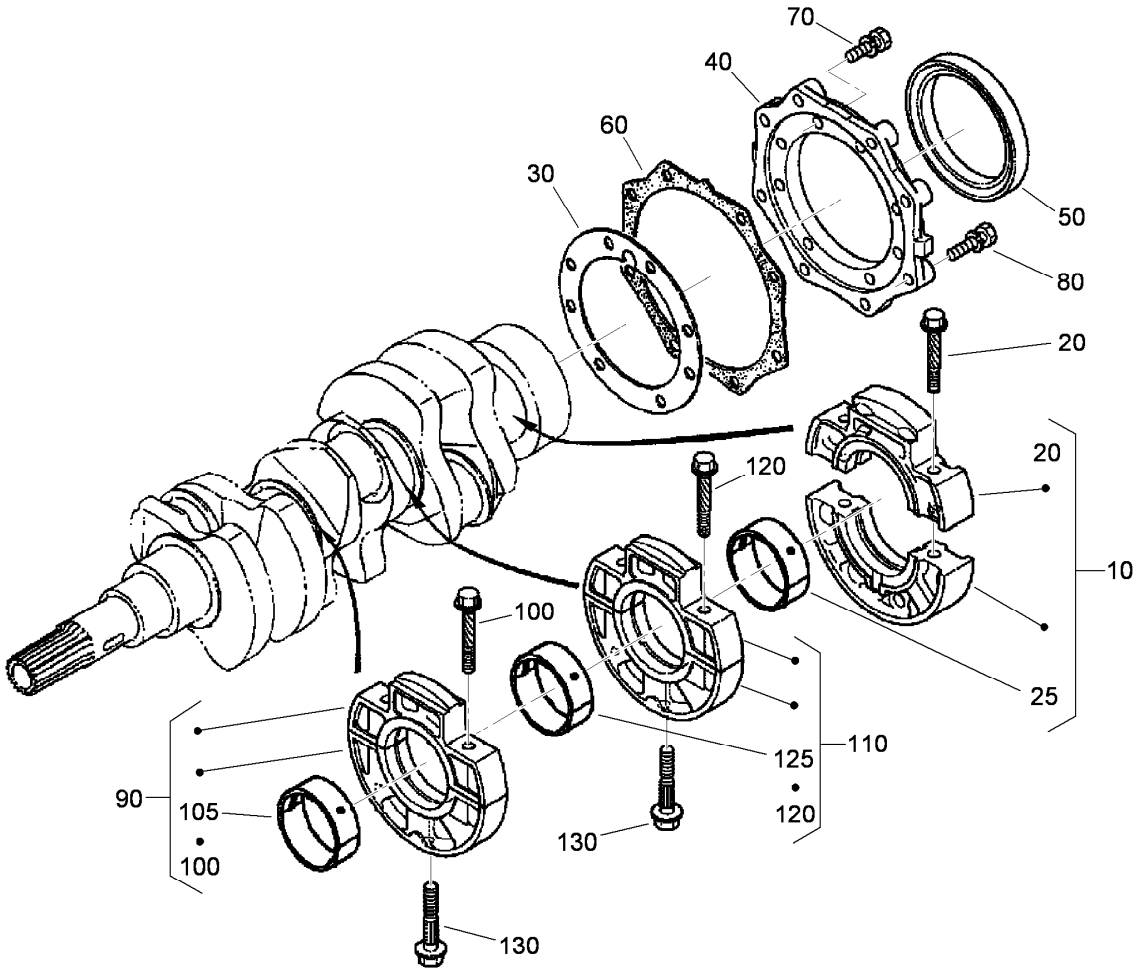

Main Bearing Case Assembly

Ref.	*Part Number*	*Qty.*	*Description*
10	112-2494	1	Wheel Case Bearing ASM
20	110-3723	2	Bolt-Case, Bearing
25	110-3744	1	Crankshaft Metal ASM (STD)
30	112-2812	1	Gasket-Case, Bearing
40	112-8334	1	Cover-Case, Bearing
50	110-3724	1	Seal-Oil
60	100-1876	1	Gasket-Cover, Case
70	98-7568	8	Bolt
80	100-1750	8	Bolt
90	112-2495	1	Main Case Bearing ASM
100	110-3723	2	Bolt-Case, Bearing
105	110-3741	1	Crankshaft Metal ASM (STD)
110	112-2496	1	Main Case Bearing ASM
120	110-3723	2	Bolt-Case, Bearing
125	110-3741	1	Crankshaft Metal ASM (STD)
130	100-1874	2	Bolt-Case, Bearing

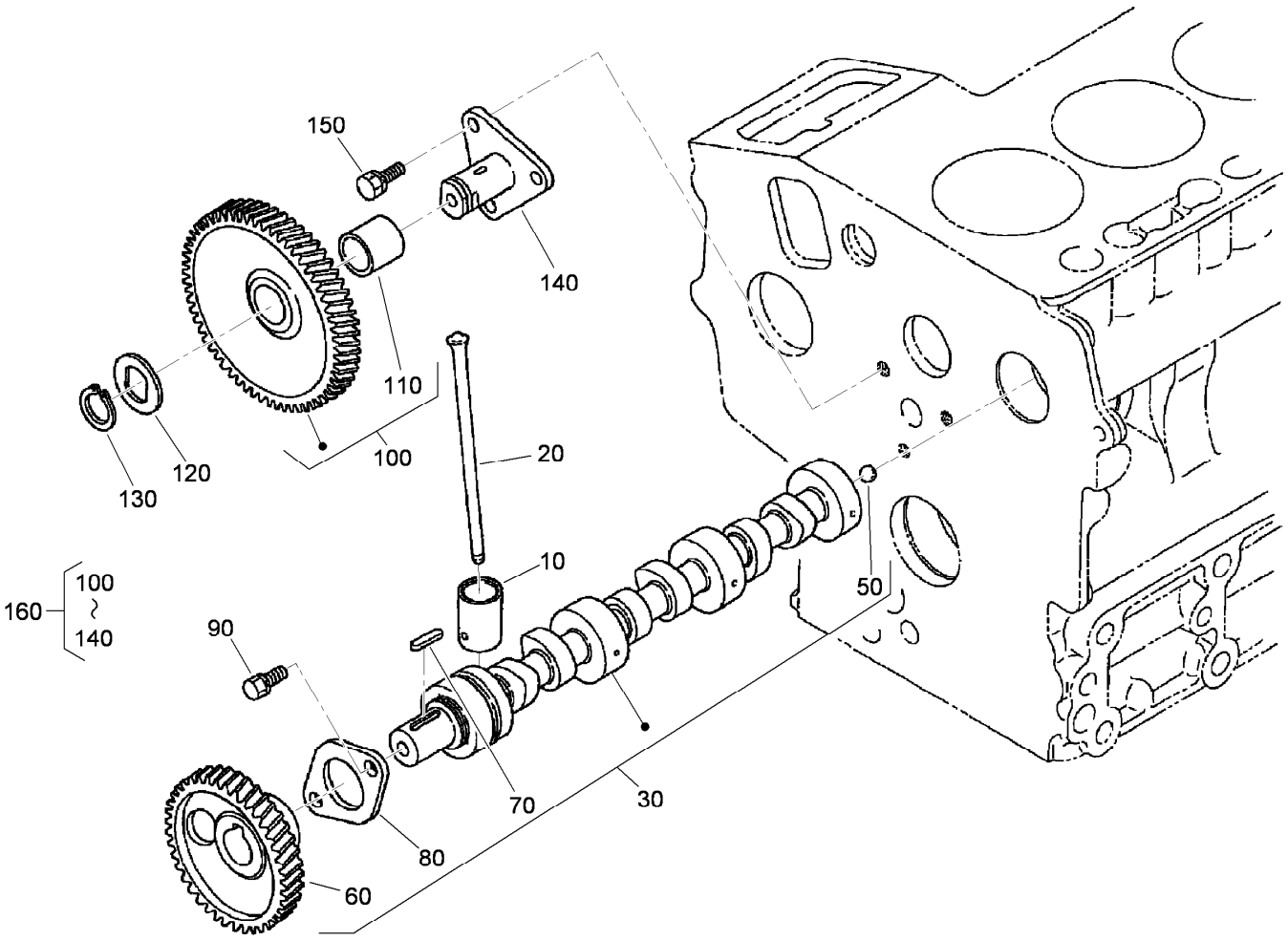

Cam Shaft and Idle Gear Shaft Assembly

Ref.	*Part Number*	*Qty.*	*Description*
10	110-3727	6	Tappet
20	100-1989	6	Rod-Push
30	117-0305	1	Camshaft ASM
50	110-3729	1	Ball
60	100-2163	1	Gear-Cam
70	98-9378	1	Key-Feather
80	100-1887	1	Stopper-Camshaft
90	98-9350	2	Bolt
100	100-1966	1	Gear-Idle
110	100-1968	1	Bushing
120	100-1970	1	Collar-Gear, Idle
130	100-1969	1	Ring-Snap
140	100-1967	1	Shaft-Gear, Idle
150	98-9351	3	Bolt
160	100-2240	1	Idle Gear ASM

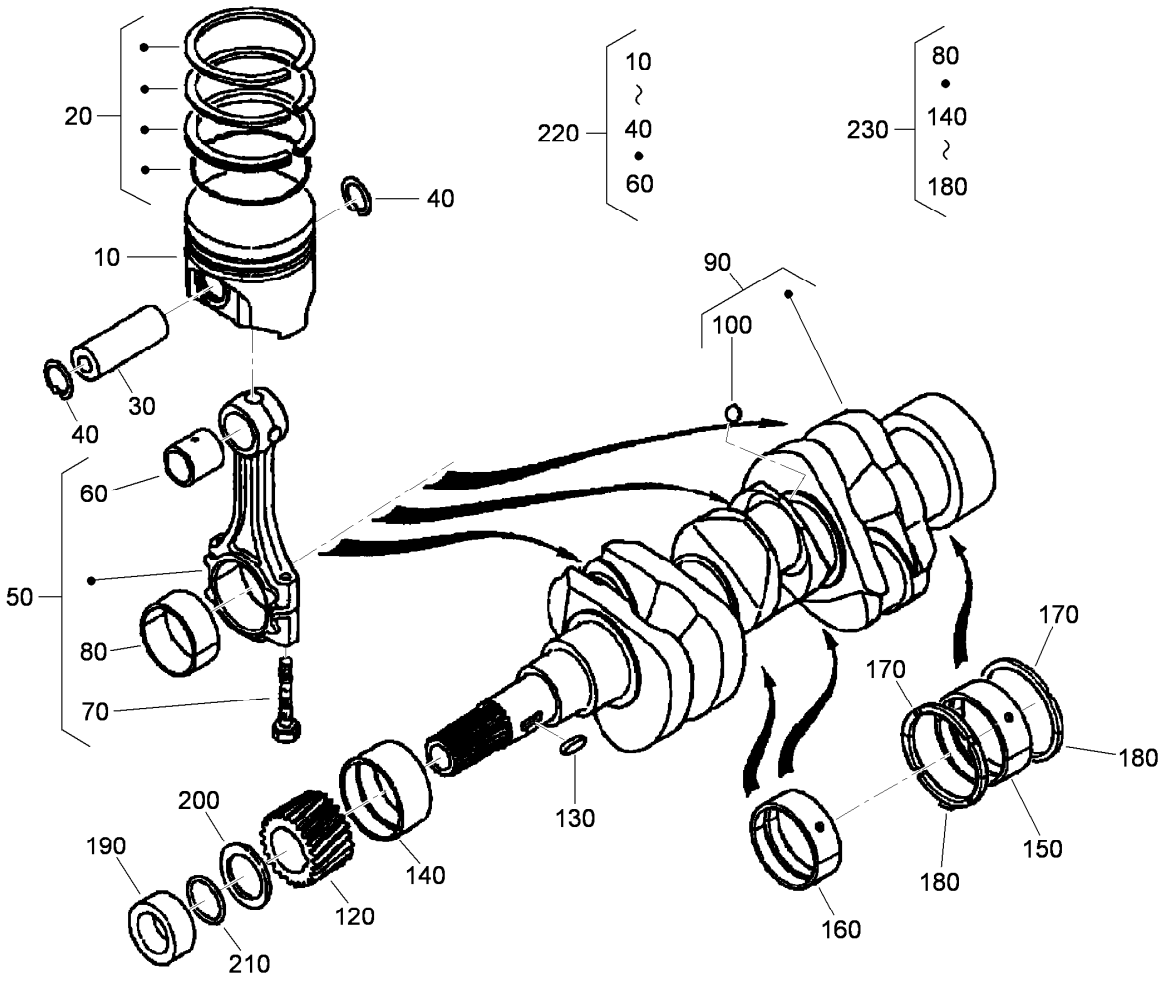

Piston and Crankshaft Assembly

Ref.	Part Number	Qty.	Description
10	117-0306	3	Piston (STD)
10	117-0307	3	Piston (+.25MM)
20	112-2501	3	Piston Ring ASM (STD)
20	112-2502	3	Piston Ring ASM (+.25MM)
30	110-3734	3	Pin-Piston
40	100-1835	6	Circlip-Internal
50	110-3735	3	Connecting Rod ASM
60	110-3736	3	Bushing-Pin, Piston
70	100-1999	6	Bolt-Rod, Connecting
80	100-2000	3	Metal-Crankpin (STD)
80	100-1942	3	Metal-Crankpin (-0.20Mm)
80	100-1943	3	Metal-Crankpin (-0.40Mm)
90	117-0308	1	Crankshaft
100	100-1791	3	Ball
120	100-1891	1	Gear-Crankshaft
130	100-1752	1	Key-Feather
140	110-3738	1	Metal-Crankshaft (STD)
140	110-3739	1	Metal-Crankshaft (-.0.20MM)
140	110-3740	1	Metal-Crankshaft (-0.40MM)
150	110-3744	1	Crankshaft Metal ASM (STD)
150	110-3745	1	Crankshaft Metal ASM (-0.20MM)
150	110-3746	1	Crankshaft Metal ASM (-0.40MM)
160	110-3741	2	Crankshaft Metal ASM (STD)
160	110-3742	2	Crankshaft Metal ASM (-0.20MM)
160	110-3743	2	Crankshaft Metal ASM (-0.40Mm)
170	100-1836	2	Metal-Side (STD)
170	100-1838	2	Metal-Side (+0.20MM)
170	100-1839	2	Metal-Side (+0.40MM)
180	117-0309	2	Metal-Side (STD)
180	117-0310	2	Metal-Side (+0.20Mm)
180	117-0311	2	Metal-Side (+0.40Mm)
190	100-1890	1	Collar-Crankshaft
200	100-1974	1	Slinger-Oil
210	100-2209	1	O-Ring
220	112-2497	3	Piston Kit (STD)
220	112-2498	3	Piston Kit (+.25MM)
230	110-3749	1	Engine Metal Kit
230	110-3750	1	Engine Metal Kit
230	110-3751	1	Engine Metal Kit

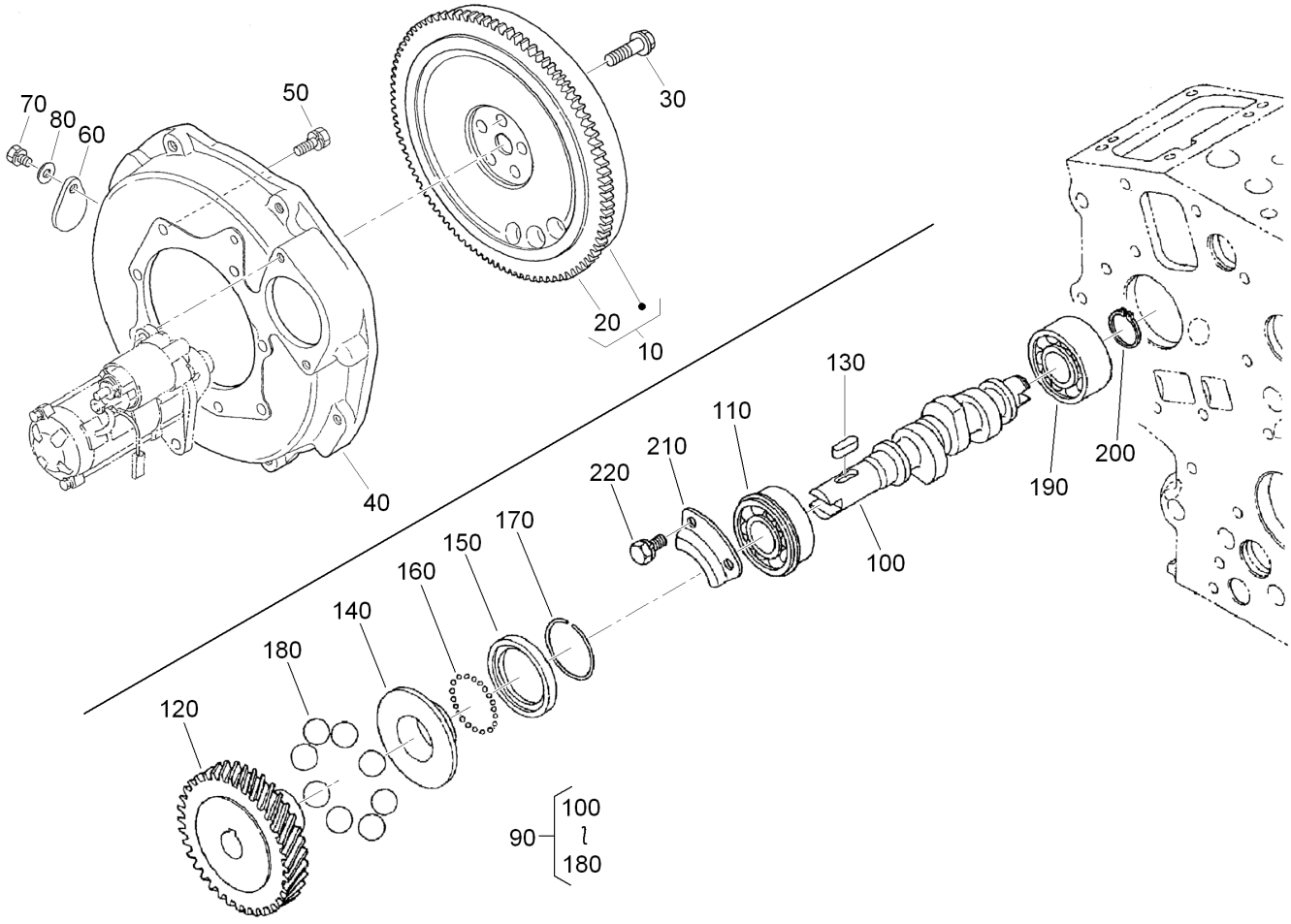

Flywheel and Fuel Camshaft Assembly

Ref.	*Part Number*	*Qty.*	*Description*
10	110-3752	1	Flywheel
20	112-2816	1	Gear-Ring
30	100-1930	5	Bolt-Flywheel
40	117-1703	1	Housing-Flywheel
50	98-9359	10	Bolt
60	100-2177	1	Cover
70	100-9195	1	Bolt
80	98-7660	1	Washer-Plain
90	112-8335	1	Fuel Camshaft ASM
100	112-2818	1	Camshaft-Fuel
110	100-1795	1	Bearing-Ball
120	100-2006	1	Gear-Pump, Injection
130	100-1752	1	Key-Feather
140	112-8336	1	Sleeve-Governor
150	100-1904	1	Case-Ball, Governor
160	100-1790	32	Ball
170	100-1843	1	Circ-Clip
180	100-1793	8	Ball
190	110-3757	1	Bearing-Ball
200	100-1784	1	Circ-Clip, External
210	100-1888	1	Stopper-Fuel, Camshaft
220	98-9350	2	Bolt

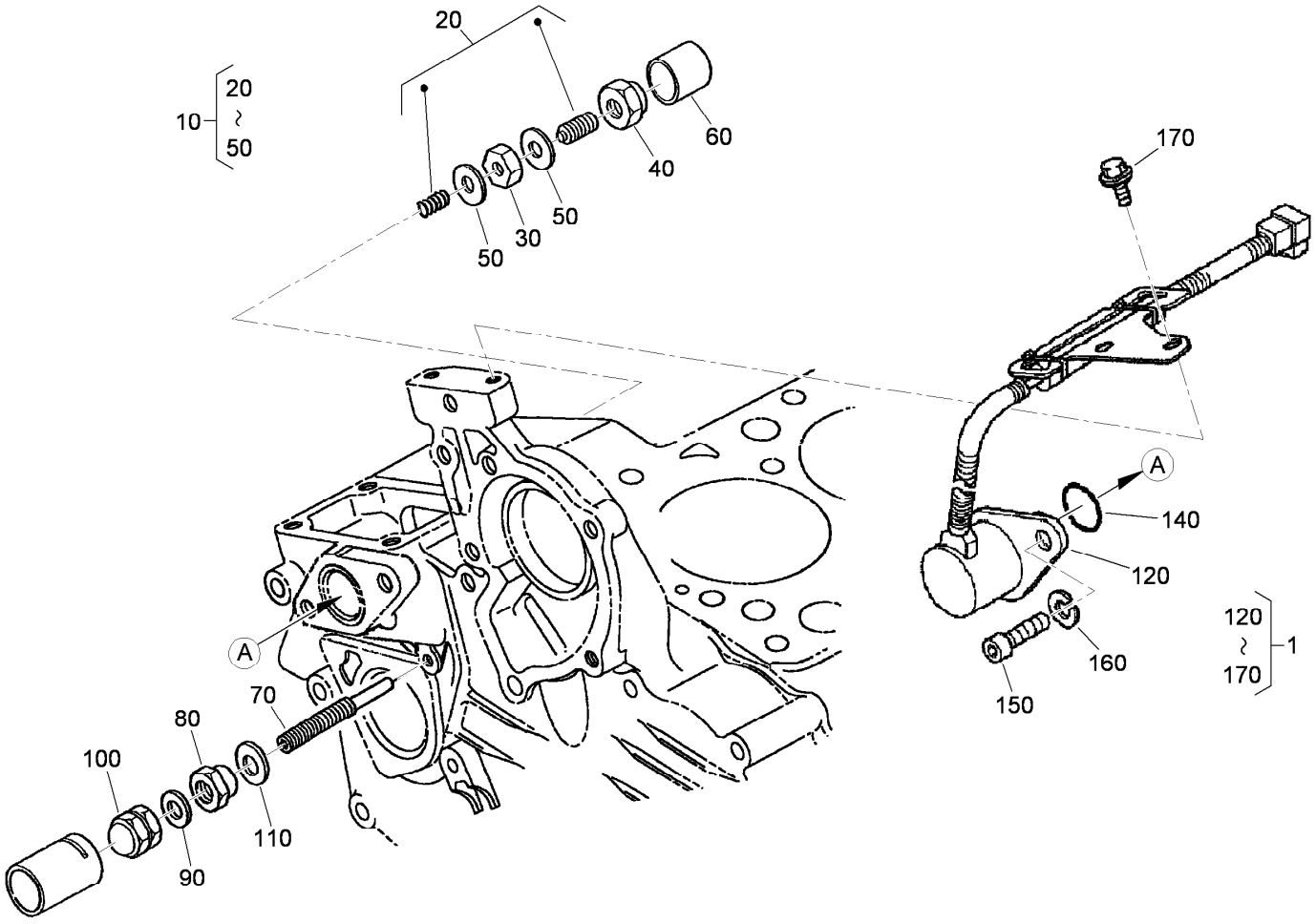

Idle Apparatus and Stop Solenoid Assembly

Ref.	*Part Number*	*Qty.*	*Description*
1	117-0312	1	*obs* Solenoid ASM
10	100-1898	1	Idle Apparatus ASM
20	100-1899	1	Adjusting Bolt ASM
30	100-1846	1	Nut
40	100-1901	1	Nut-Cap
50	98-7428	2	Gasket
60	100-1902	1	Cap
70	110-3758	1	Bolt-Adjusting
80	100-2175	1	Nut-Lock
90	98-7654	1	Gasket
100	99-8387	1	Nut-Cap
110	107-9081	1	Gasket
120	117-2719	1	Solenoid Stop ASM
140	110-3762	1	O-Ring
150	110-3763	2	Bolt-HSH
160	98-7699	2	Washer-Spring
170	100-1774	2	Bolt-Flange

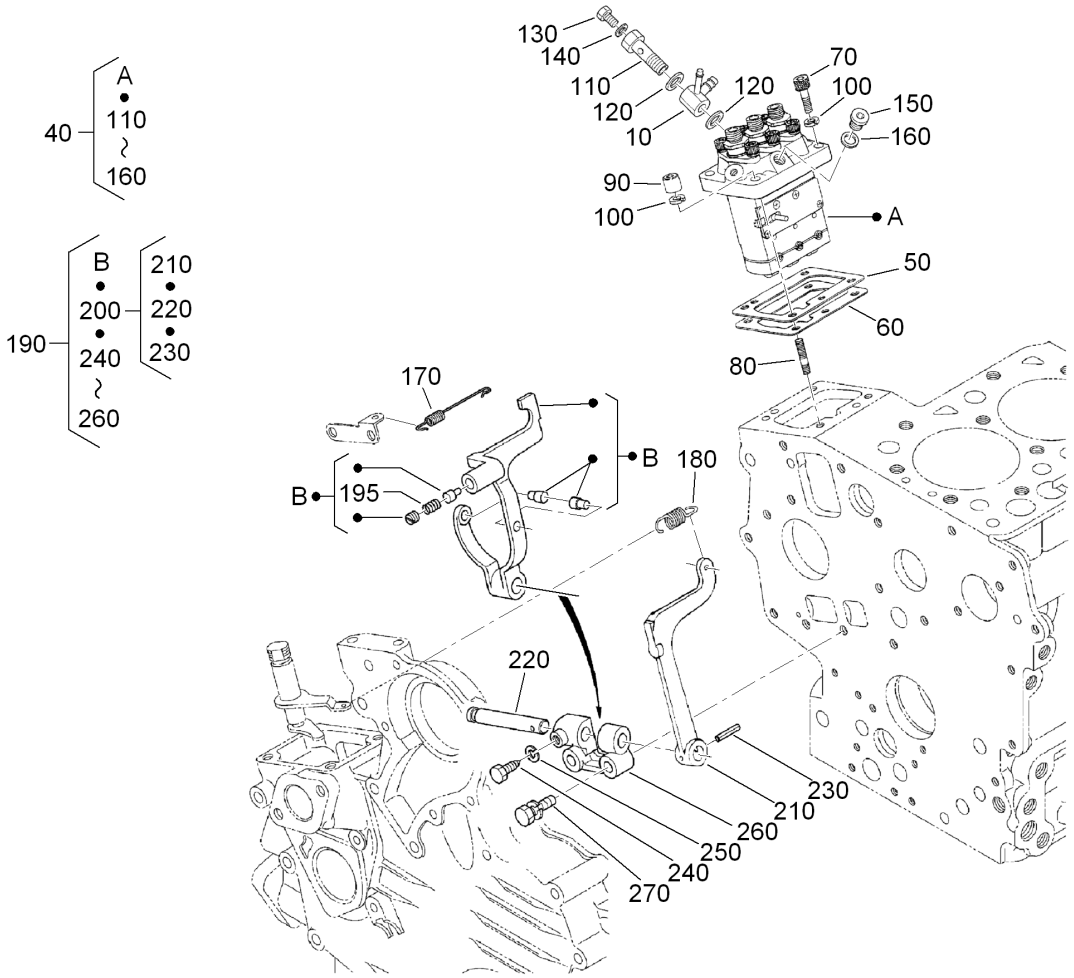

Injection Pump and Governor Assembly

Ref.	Part Number	Qty.	Description
10	110-3764	1	Joint
40	110-3765	1	Injection Pump ASM
50	115-3045	1	Shim-Injection (0.175MM)
50	98-9456	1	Shim-Injection (0.20MM)
50	98-9457	1	Shim-Injection (0.25MM)
60	115-3046	1	Shim-Injection (0.35MM)
60	98-9458	1	Shim-Injection (0.30MM)
70	98-9361	2	Bolt-HSH
80	98-9438	2	Stud
90	98-9440	2	Nut-Cap
100	98-7699	4	Washer-Spring
110	100-1896	1	Screw-Hollow
120	98-9445	2	Gasket
130	98-9430	1	Screw
140	98-9446	1	Gasket

Ref.	Part Number	Qty.	Description
150	98-9466	1	Plug
160	98-9451	1	Gasket
170	110-3766	1	Spring-Start
180	110-3767	1	Spring-Governor
190	112-2506	1	Fork Lever ASM
195	117-0313	1	Spring
200	100-1905	1	Fork Lever ASM
210	100-1907	1	Lever-Fork
220	100-1908	1	Shaft-Lever, Fork
230	100-1751	1	Pin-Spring
240	100-1845	1	Bolt
250	100-2204	1	Washer-Spring
260	100-1909	1	Holder-Lever, Fork
270	100-1763	2	Bolt

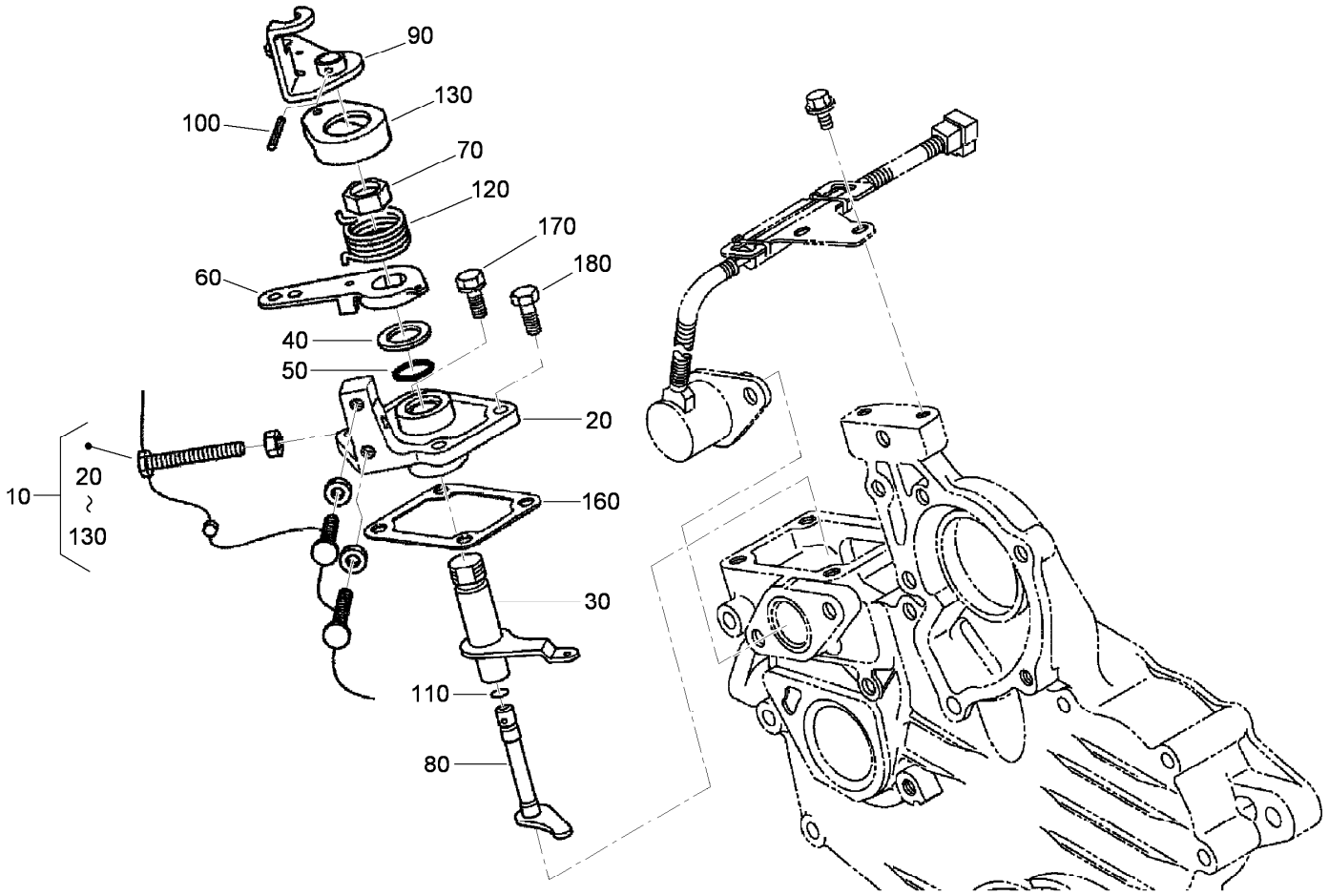

Speed Control Plate Assembly

Ref.	*Part Number*	*Qty.*	*Description*
10	110-3769	1	Speed Control Plate ASM
20	110-3770	1	Plate-Control, Speed
30	110-3771	1	Lever-Governor
40	110-3772	1	Collar
50	100-2208	1	O-Ring
60	110-3773	1	Lever-Control, Speed
70	110-3774	1	Nut-Control, Speed
80	110-3775	1	Shaft-Lever
90	110-3776	1	Lever-Stop, Engine
100	110-3777	1	Pin-Spring
110	100-2207	1	O-Ring
120	110-3778	1	Spring-Return
130	110-3779	1	Cap
160	100-1962	1	Gasket-Plate, Control
170	98-7605	2	Bolt
180	112-2507	2	Bolt

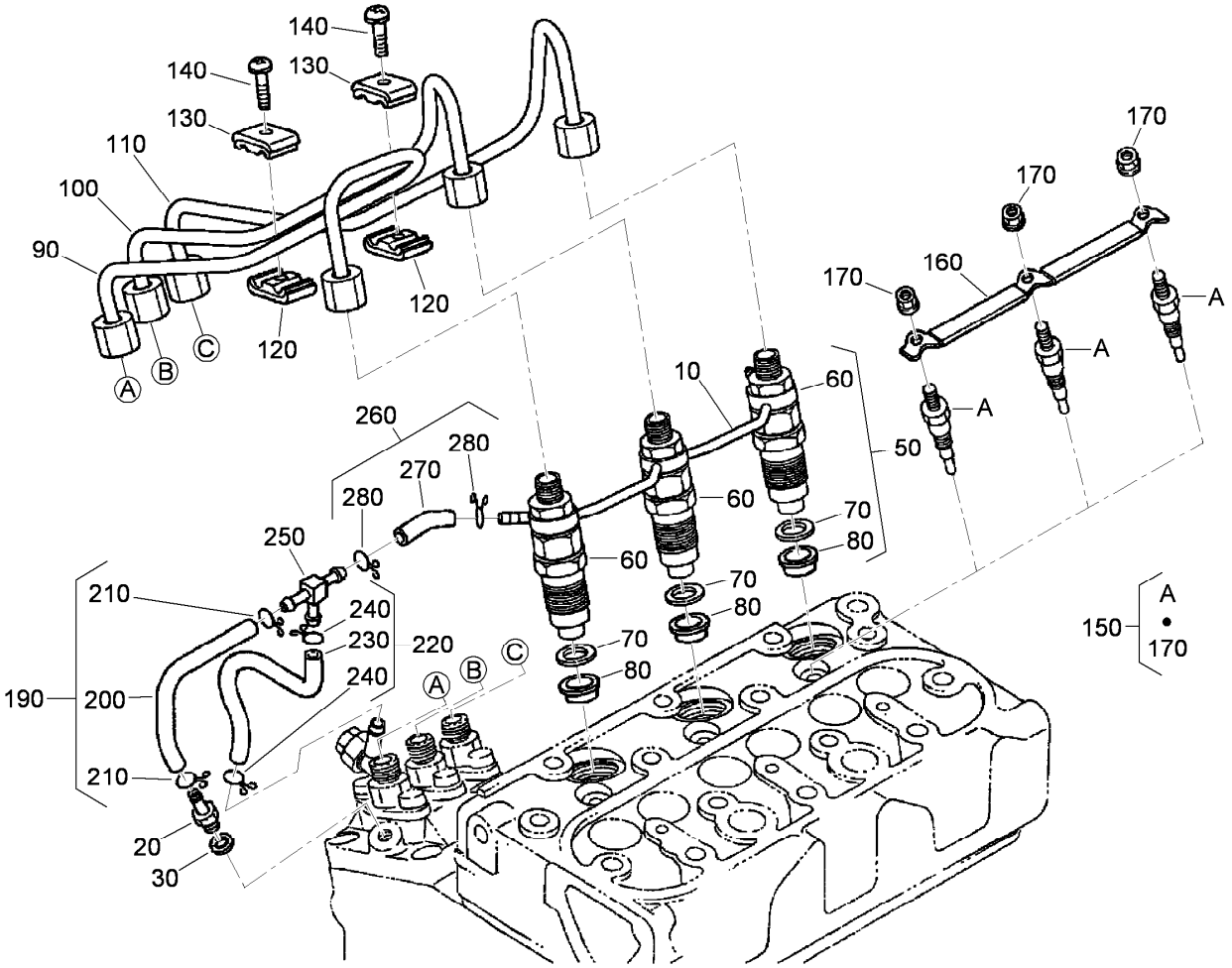

Nozzle Holder and Glow Plug Assembly

Ref.	*Part Number*	*Qty.*	*Description*
10	110-3780	1	Over Flow Pipe ASM
20	98-9431	1	Screw-Bleeder, Air
30	98-7654	1	Gasket
50	100-1982	3	Nozzle Holder Kit
60	100-1758	3	Nozzle Holder ASM
70	98-7676	3	Gasket
80	98-7677	3	Seal-Heat
90	110-3781	1	Pipe-Injection
100	110-3782	1	Pipe-Injection
110	110-3783	1	Pipe-Injection
120	98-7682	2	Clamp-Pipe
130	98-7683	2	Clamp-Pipe
140	98-7684	2	Screw (W/Washer)

Ref.	*Part Number*	*Qty.*	*Description*
150	100-1854	3	Plug-Glow
160	110-3784	1	Cord-Plug, Glow
170	99-8377	3	Nut-Flange
190	110-3785	1	Fuel Tube ASM
200	110-3786	1	Tube-Fuel
210	98-7671	2	Clip-Pipe
220	110-3787	1	Fuel Tube ASM
230	110-3788	1	Tube-Fuel
240	98-7671	2	Clip-Pipe
250	112-8338	1	Pipe-Joint, T
260	110-3790	1	Fuel Tube ASM
270	110-3791	1	Tube-Fuel
280	98-7671	2	Clip-Pipe

Nozzle Holder Assembly

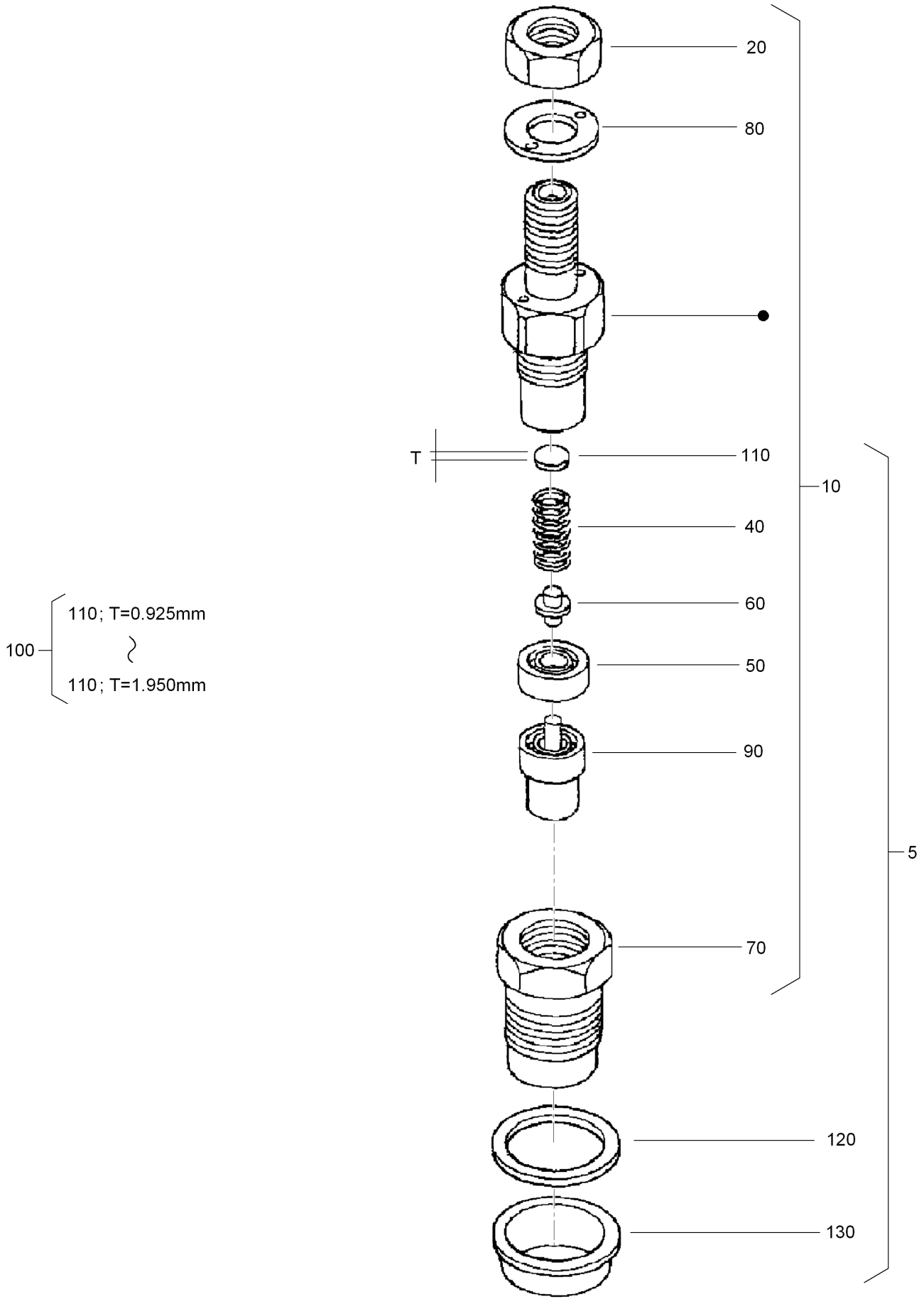

Nozzle Holder Assembly (continued)

Ref.	Part Number	Qty.	Description
5	100-1982	3	Nozzle Holder Kit
10	100-1758	3	Nozzle Holder ASM
20	98-7613	3	Nut
40	98-7647	3	Spring-Nozzle
50	98-7665	3	Spacer-Distance
60	98-7666	3	Rod-Push
70	100-2242	3	Nut-Nozzle
80	98-7668	3	Washer
90	100-2009	3	Piece-Nozzle
100	98-9448	3	Adjusting Washer ASM
110	98-7842	3	Washer-Adjusting (0.950Mm)
110	98-7841	3	Washer-Adjusting (0.925Mm)
110	98-7843	3	Washer-Adjusting (0.975Mm)
110	98-7844	3	Washer-Adjusting (1.000Mm)
110	98-7845	3	Washer-Adjusting (1.025Mm)
110	98-7846	3	Washer-Adjusting (1.050Mm)
110	98-7847	3	Washer-Adjusting (1.075MM)
110	98-7848	3	Washer-Adjusting (1.100MM)
110	98-7849	3	Washer-Adjusting (1.125MM)
110	98-7850	3	Washer-Adjusting (1.150MM)
110	98-7851	3	Washer-Adjusting (1.175MM)
110	98-7852	3	Washer-Adjusting (1.200MM)
110	98-7853	3	Washer-Adjusting (1.225MM)
110	98-7854	3	Washer-Adjusting (1.250MM)
110	98-7855	3	Washer-Adjusting (1.275MM)
110	98-7856	3	Washer-Adjusting 1.300MM)
110	98-7857	3	Washer-Adjusting (1.325MM)
110	98-7858	3	Washer-Adjusting (1.350MM)
110	98-7859	3	Washer-Adjusting (1.375MM)
110	98-7860	3	Washer-Adjusting (1.400MM)
110	98-7861	3	Washer-Adjusting (1.425MM)
110	98-7862	3	Washer-Adjusting (1.450MM)
110	98-7863	3	Washer-Adjusting (1.475MM)
110	98-7864	3	Washer-Adjusting (1.500MM)
110	98-7865	3	Washer-Adjusting (1.525MM)
110	98-7866	3	Washer-Adjusting (1.550MM)
110	98-7867	3	Washer-Adjusting (1.575MM)
110	98-7868	3	Washer-Adjusting (1.600MM)
110	98-7869	3	Washer-Adjusting (1.625MM)
110	98-7870	3	Washer-Adjusting (1.650MM)
110	98-7871	3	Washer-Adjusting (1.675MM)
110	98-7872	3	Washer-Adjusting (1.700MM)
110	98-7873	3	Washer-Adjusting (1.725MM)
110	98-7874	3	Washer-Adjusting (1.750MM)
110	98-7875	3	Washer-Adjusting (1.775MM)
110	98-7876	3	Washer-Adjusting (1.800MM)
110	98-7877	3	Washer-Adjusting (1.825MM)
110	98-7878	3	Washer-Adjusting (1.850MM)
110	98-7879	3	Washer-Adjusting (1.875MM)
110	98-7880	3	Washer-Adjusting (1.900MM)
110	98-7881	3	Washer-Adjusting (1.925MM)
110	98-7882	3	Washer-Adjusting (1.950MM)
120	98-7676	3	Gasket
130	98-7677	3	Seal-Heat

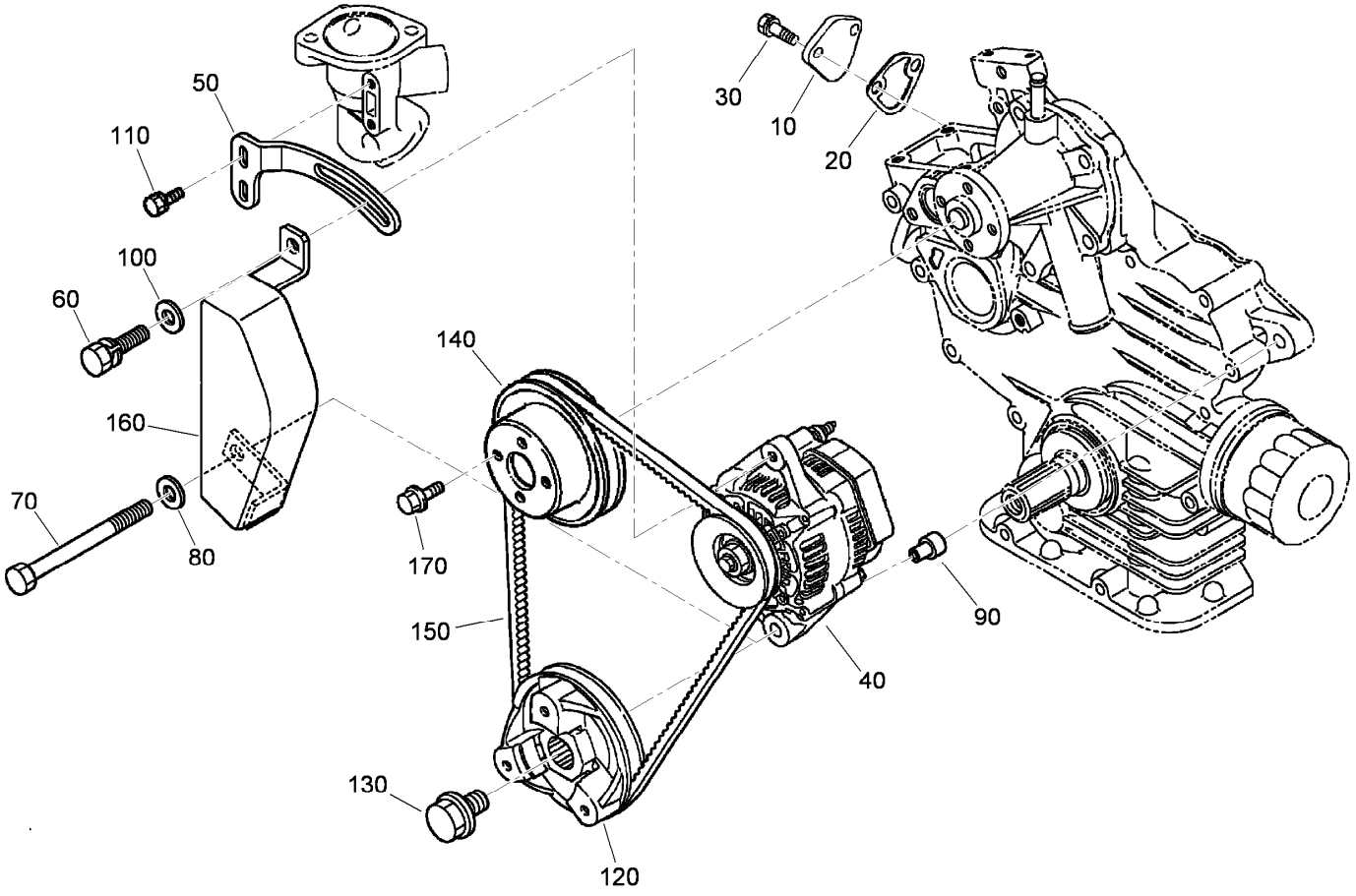

Alternator, Pulley and Fuel Pump Cover Assembly

Ref.	*Part Number*	*Qty.*	*Description*
10	99-3514	1	Cover
20	98-9636	1	Gasket-Pump, Fuel
30	98-7692	2	Bolt
40	98-9474	1	Alternator ASM
50	110-3792	1	Stay-Alternator
60	98-7697	1	Bolt
70	98-7556	1	Bolt
80	98-7660	1	Washer-Plain
90	110-3794	1	Collar
100	107-0119	1	Washer-Plain
110	98-7692	2	Bolt
120	112-2510	1	Pulley-Drive, Fan
130	100-1978	1	Bolt
140	100-1921	1	Pulley-Fan
150	112-2511	1	Belt
160	110-3797	1	Cover
170	99-8363	4	Bolt-Flange

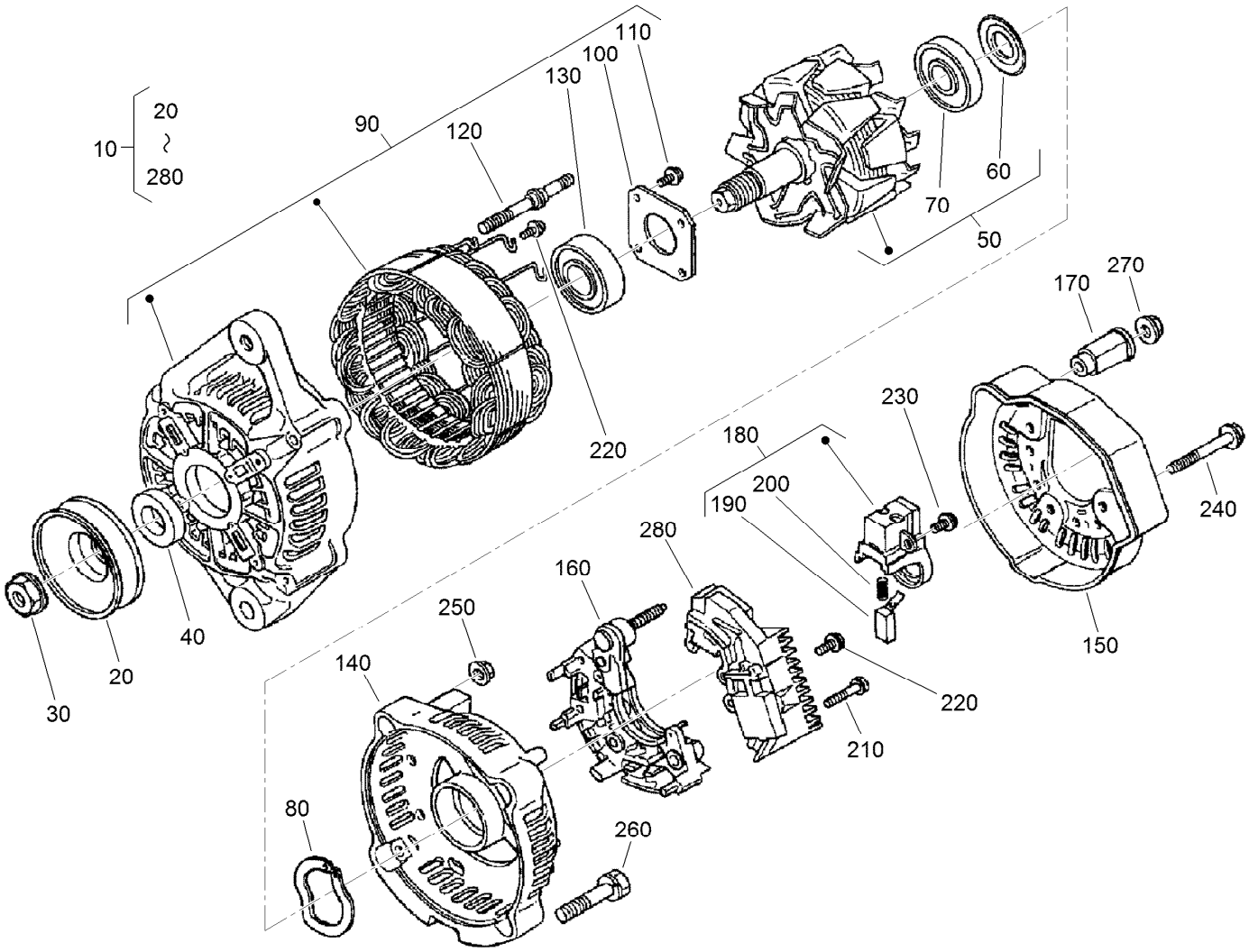

Alternator Components Assembly

Ref.	Part Number	Qty.	Description
10	98-9474	1	Alternator ASM
20	98-9453	1	Pulley-Dynamo
30	98-7708	1	Nut
40	98-7709	1	Collar
50	107-0136	1	Rotor ASM
60	98-7711	1	Cover-Bearing
70	107-0138	1	Bearing-Ball
80	98-7713	1	Washer-Thrust
90	107-0139	1	Drive End Frame ASM
100	98-7715	1	Plate-Retainer
110	98-7716	4	Screw-Head, Round
120	98-7717	2	Bolt-Through
130	107-0137	1	Bearing-Ball
140	107-9087	1	Frame-End

Ref.	Part Number	Qty.	Description
150	107-0140	1	Cover-End
160	98-7721	1	Rectifier ASM
170	98-7722	1	Bushing-Insulation
180	107-0141	1	Brush Holder ASM
190	98-7724	2	Brush
200	98-7725	2	Spring-Brush
210	98-7726	2	Screw-Head, Round
220	98-7727	6	Screw-Head, Round
230	98-7728	1	Screw-Head, Round
240	98-7729	3	Bolt
250	98-7730	2	Nut
260	98-7731	2	Bolt
270	98-7732	1	Nut
280	110-3799	1	Regulator ASM

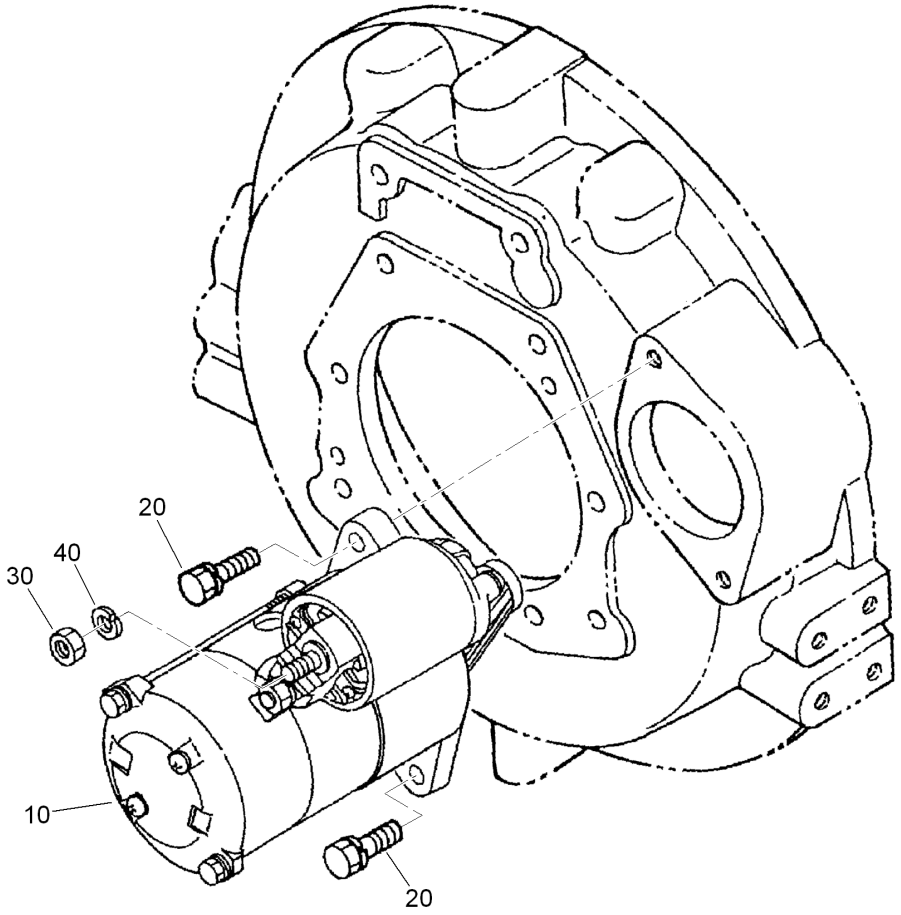

Starter Installation Assembly

Ref.	*Part Number*	*Qty.*	*Description*
10	100-2179	1	Starter ASM
20	98-7438	2	Bolt
30	98-7534	1	Nut
40	105-2893	1	Washer-Spring

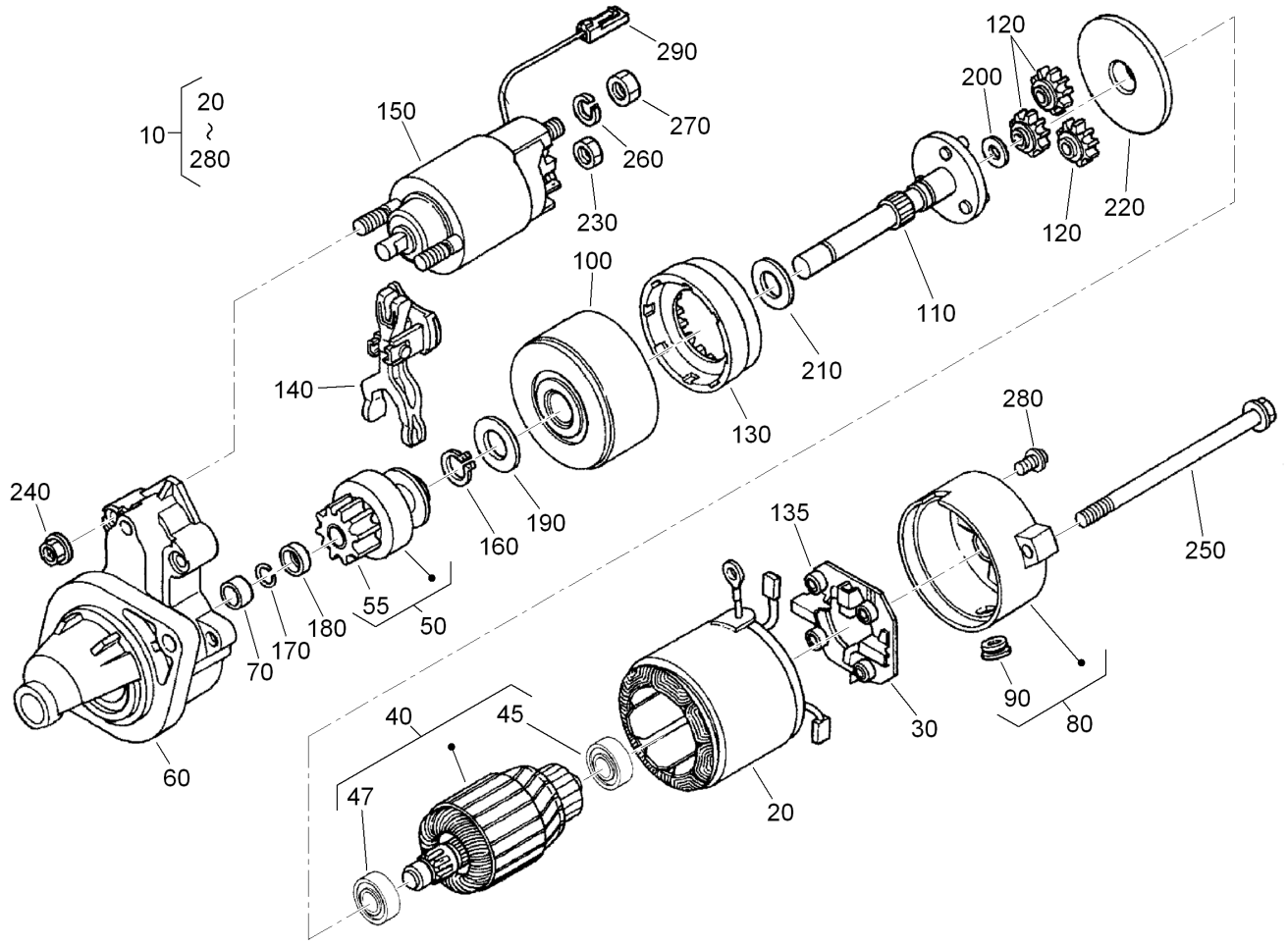

Starter Components Assembly

Ref.	Part Number	Qty.	Description
10	100-2179	1	Starter ASM
20	100-2181	1	Starter Yoke ASM
30	100-2222	1	Holder ASM
40	100-2182	1	Armature ASM
45	98-9412	1	Bearing-Ball
47	98-9411	1	Bearing-Ball
50	100-2185	1	Starter Clutch ASM
55	112-2833	1	Gear-Pinion
60	100-2180	1	Starter Housing ASM
70	100-2183	1	Bearing
80	100-2186	1	Frame ASM
90	100-2213	1	Cover
100	100-2223	1	Bearing ASM
110	100-2187	1	Starter Shaft ASM
120	100-2220	3	Gear
130	100-2221	1	Gear
135	98-7750	4	Spring-Brush

Ref.	Part Number	Qty.	Description
140	100-2218	1	Lever
150	100-2211	1	Magnetic Switch ASM
160	100-2219	1	Ring-Snap
170	100-2212	1	Ring-Snap
180	100-2216	1	Collar
190	100-2224	1	Washer-Plain
200	100-2225	1	Washer-Plain
210	100-2226	1	Washer-Plain
220	100-2227	1	Plate
230	99-8371	1	Nut-Hex
240	100-1813	2	Nut
250	100-2210	2	Bolt-Through
260	100-2215	1	Washer-Spring
270	100-2171	1	Nut-Hex
280	100-2188	2	Screw
290	99-1434	1	Wire-Lead

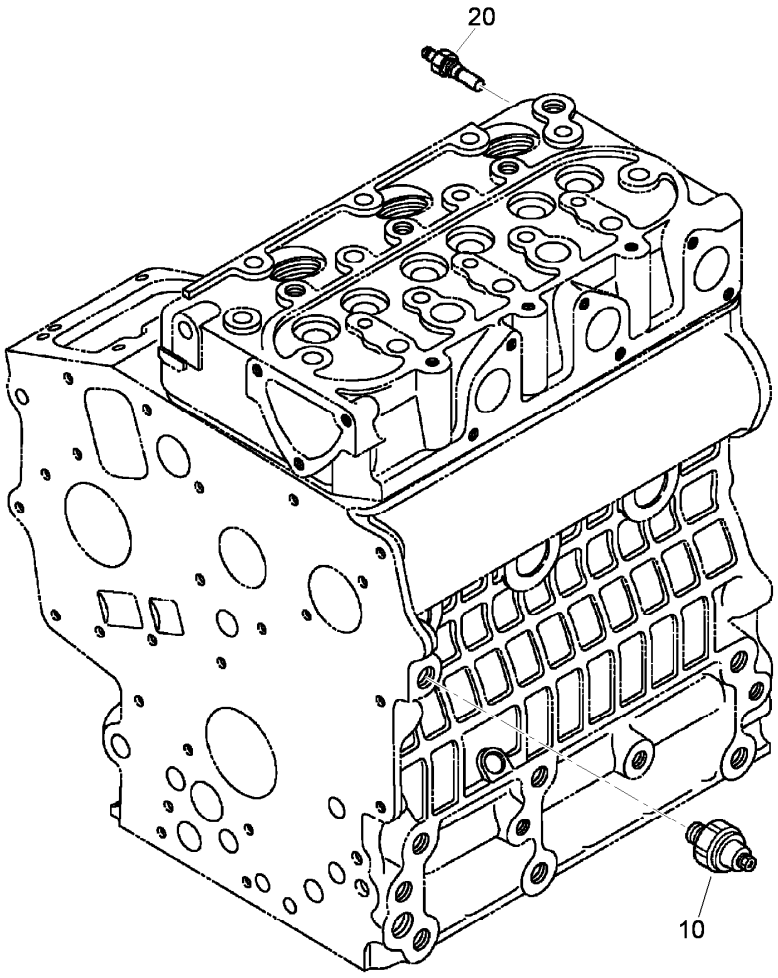

Oil Switch and Thermometer Assembly

Ref.	*Part Number*	*Qty.*	*Description*
10	98-7764	1	Switch-Oil
20	99-3582	1	Thermoswitch

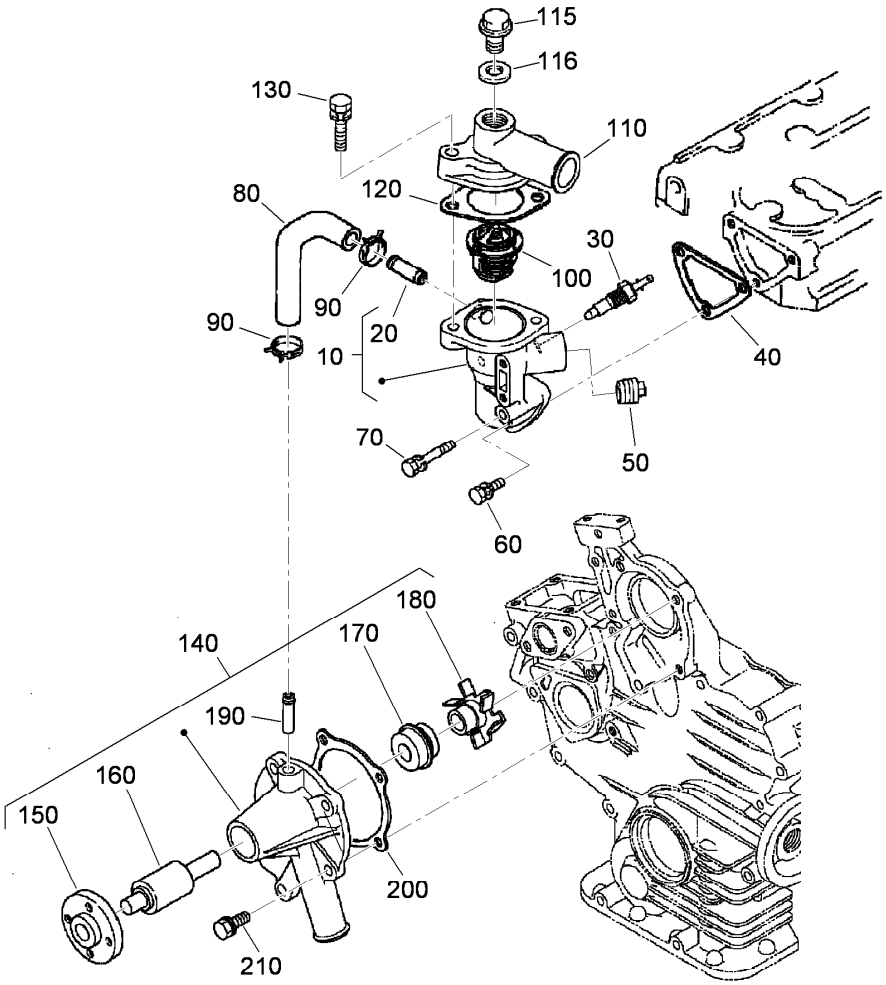

Water Flange, Thermostat and Water Pump Assembly

Ref.	*Part Number*	*Qty.*	*Description*
10	110-3819	1	Water Flange ASM
20	98-9580	1	Pipe-Return, Water
30	99-3582	1	Thermoswitch
40	110-3820	1	Gasket-Flange, Water
50	110-3821	1	Plug
60	98-7692	2	Bolt
70	105-3797	1	Bolt
80	110-3822	1	Pipe-Return, Water
90	98-9579	2	Band-Pipe
100	98-7778	1	Thermostat ASM
110	112-2512	1	Cover-Thermostat
115	105-3747	1	Plug
116	99-3583	1	Gasket
120	105-3748	1	Gasket-Thermostat
130	98-7777	2	Bolt
140	110-3824	1	Water Pump ASM
150	100-1933	1	Flange-Pump, Water
160	100-1934	1	Bearing-Ball
170	99-3518	1	Water Pump Seal ASM
180	110-3825	1	Impeller-Pump, Water
190	100-1932	1	Pipe-Return, Water
200	117-0330	1	Gasket-Pump, Water
210	100-1750	4	Bolt

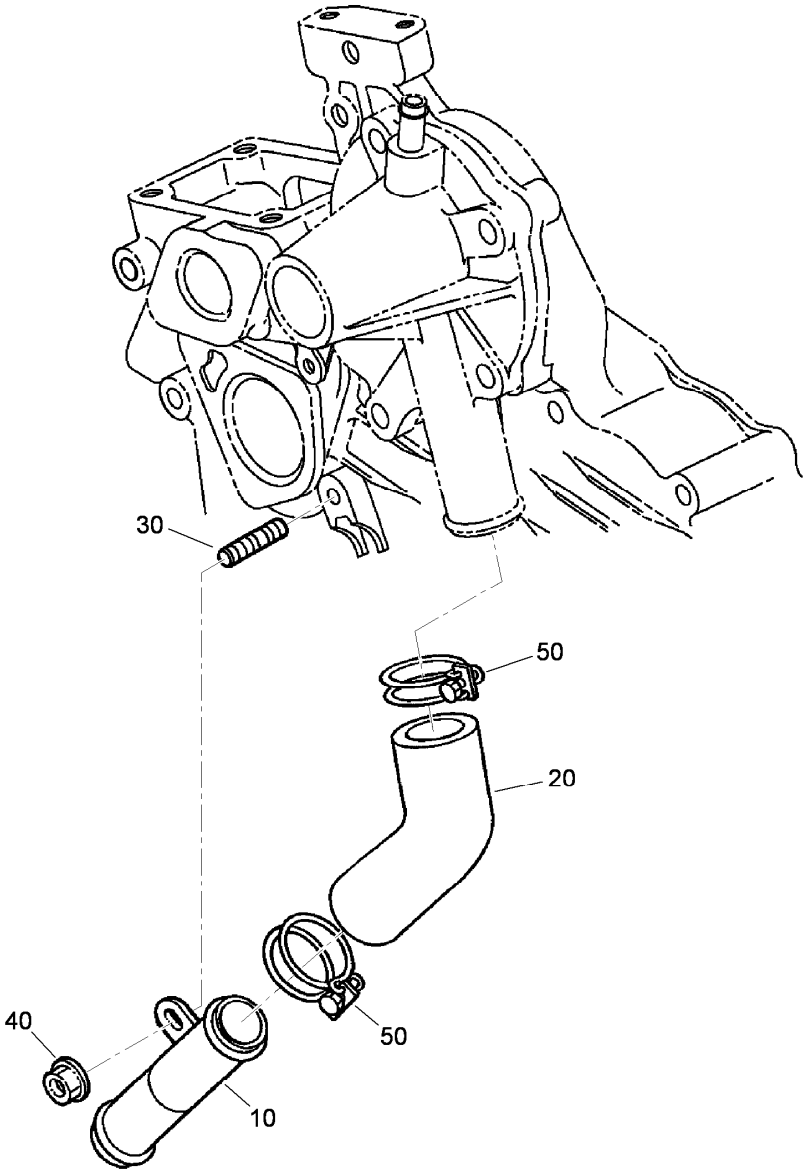

Water Pipe Assembly

Ref.	*Part Number*	*Qty.*	*Description*
10	100-1918	1	Pipe-Water
20	110-3827	1	Pipe-Water
30	100-1924	1	Stud
40	100-2203	1	Nut-Flange
50	110-3828	2	Band-Pipe

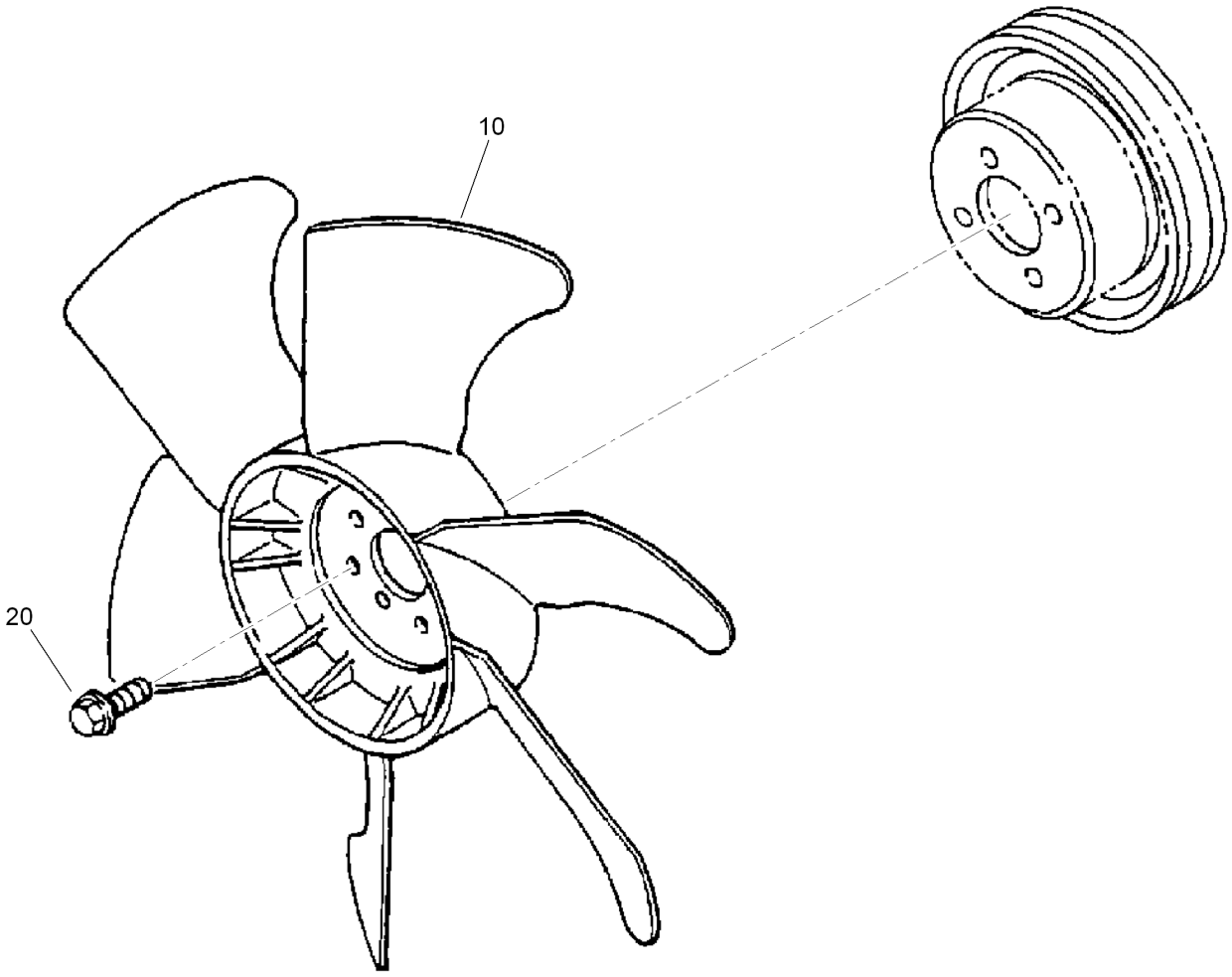

Fan Assembly

Ref.	*Part Number*	*Qty.*	*Description*
10	112-2513	1	Fan
20	99-8363	1	Bolt-Flange

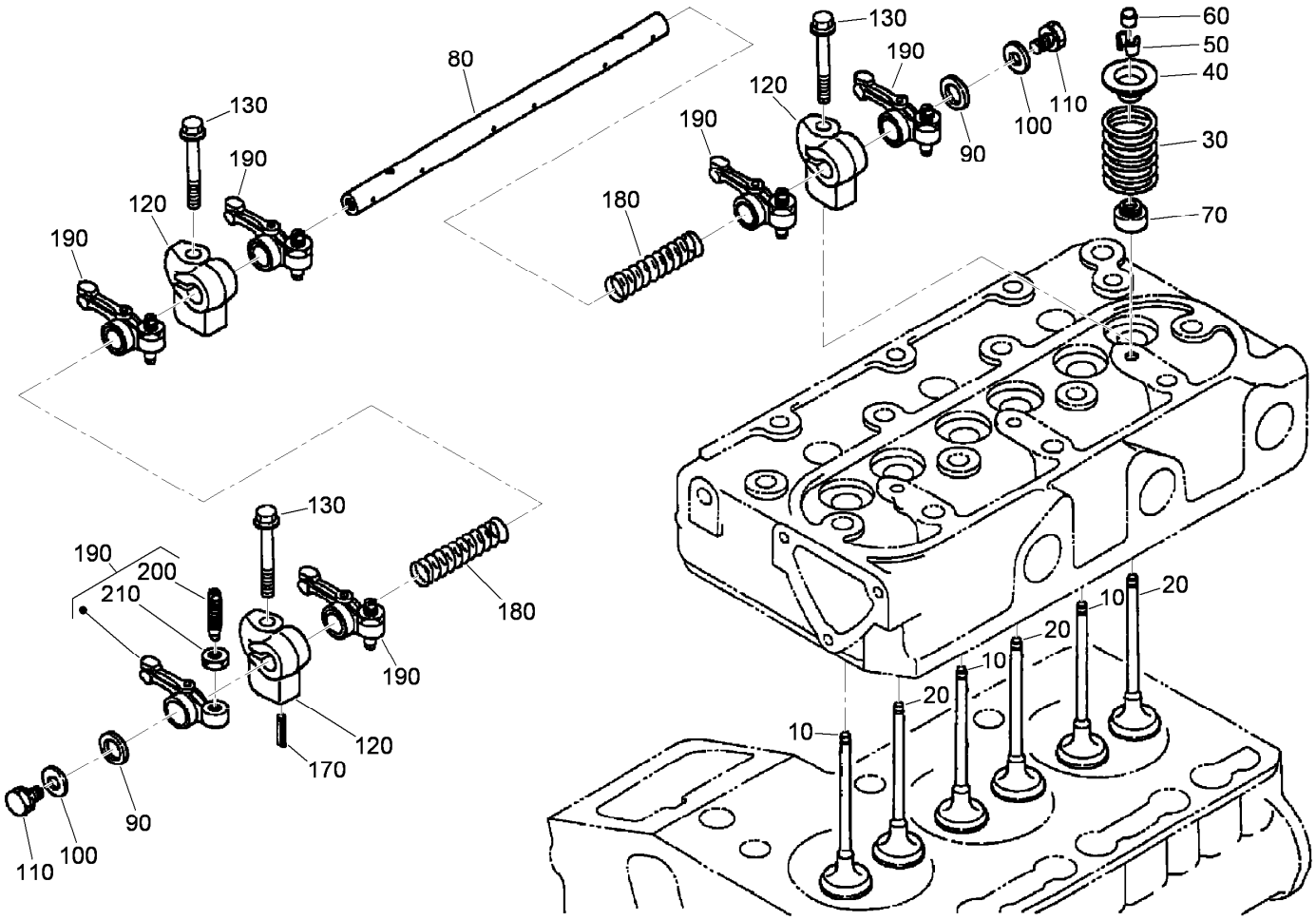

Valve and Rocker Arm Assembly

Ref.	*Part Number*	*Qty.*	*Description*
10	112-2514	3	Valve-Inlet
20	112-2515	3	Valve-Exhaust
30	100-1823	6	Spring-Valve
40	100-1825	6	Retainer-Spring, Valve
50	100-1826	6	Collet-Spring, Valve
60	100-2155	6	Cap-Valve
70	100-1797	6	Seal-Stem, Valve
80	112-8341	1	Shaft-Arm, Rocker
90	100-2044	2	Washer
100	110-3832	2	Washer-Plain
110	100-1762	2	Bolt
120	110-3833	3	Bracket-Arm, Rocker
130	110-3834	3	Bolt-Flange
170	98-7602	1	Pin-Spring
180	112-8342	2	Spring
190	100-1884	6	Rocker Arm ASM
200	100-1885	6	Screw-Adjusting
210	100-1827	6	Nut

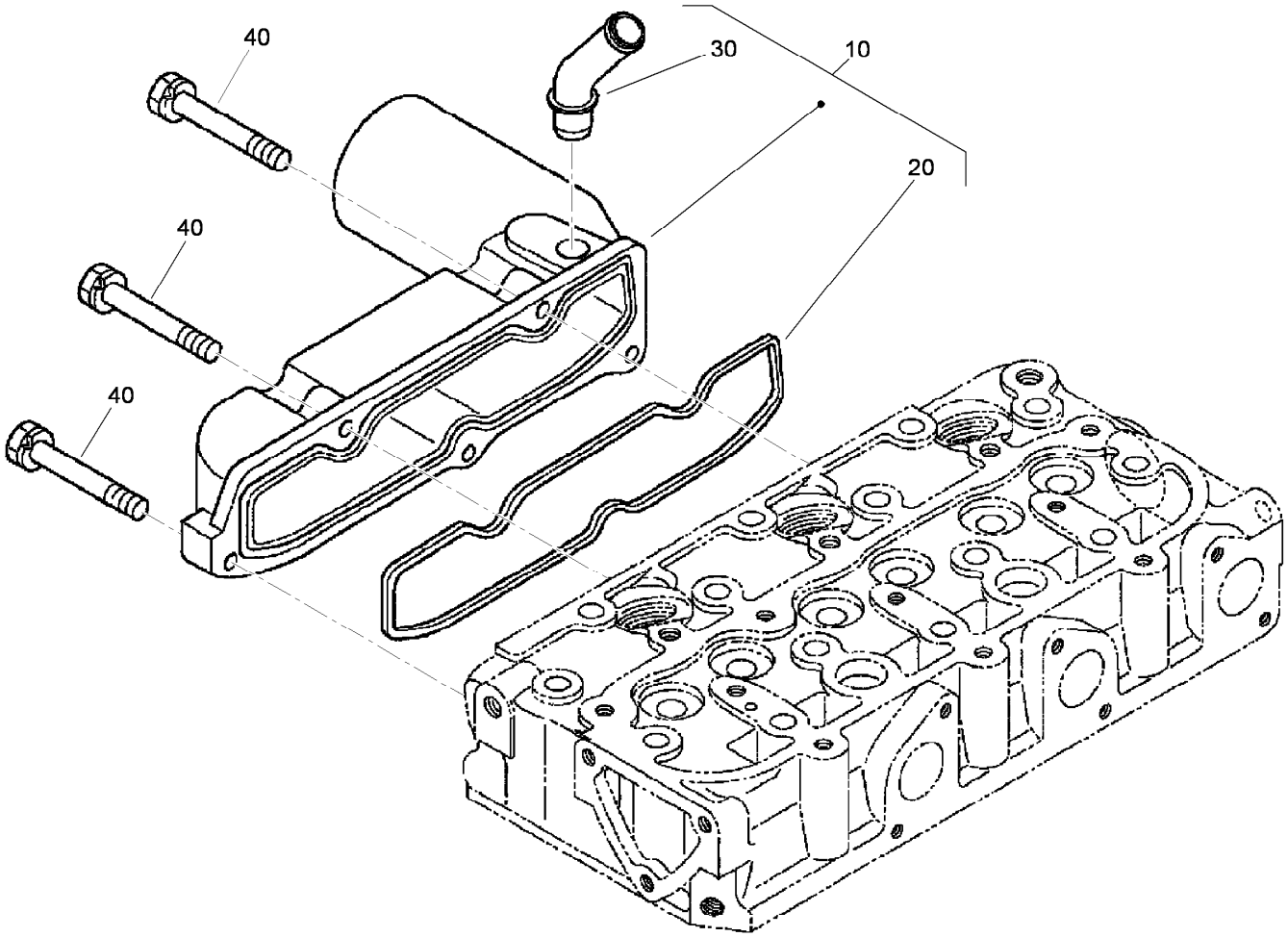

Inlet Manifold Assembly

Ref.	*Part Number*	*Qty.*	*Description*
10	110-3836	1	Inlet Manifold ASM
20	110-3838	1	Gasket-Manifold, Intake
30	110-3837	1	Pipe-Breather
40	98-9352	5	Bolt

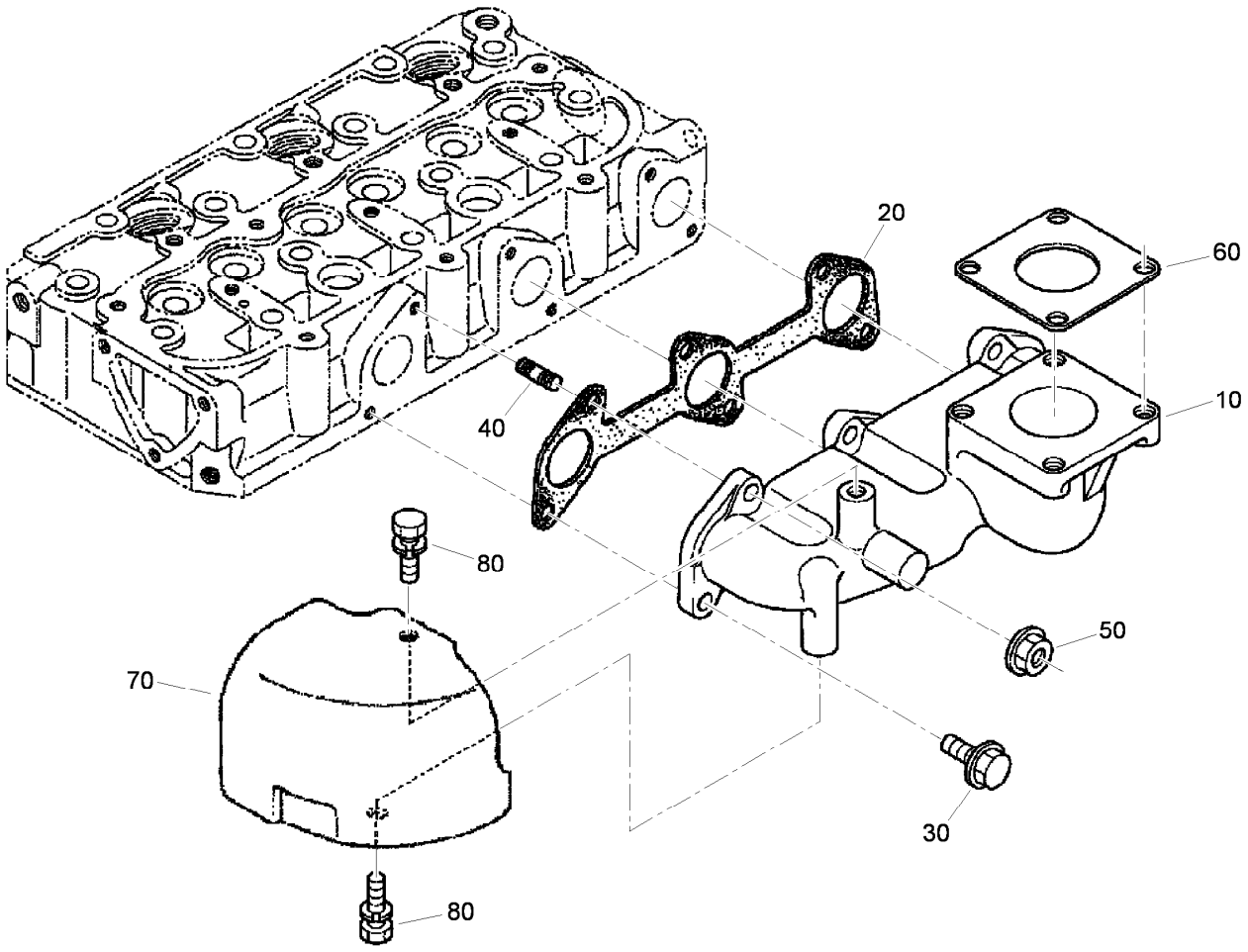

Exhaust Manifold Assembly

Ref.	*Part Number*	*Qty.*	*Description*
10	112-2516	1	Manifold-Exhaust
20	110-3840	1	Gasket-Manifold, Exhaust
30	100-1775	3	Bolt
40	100-2202	3	Stud
50	100-1778	3	Nut
60	99-8343	1	Gasket-Muffler
70	112-2517	1	Cover-Heat
80	100-1762	2	Bolt

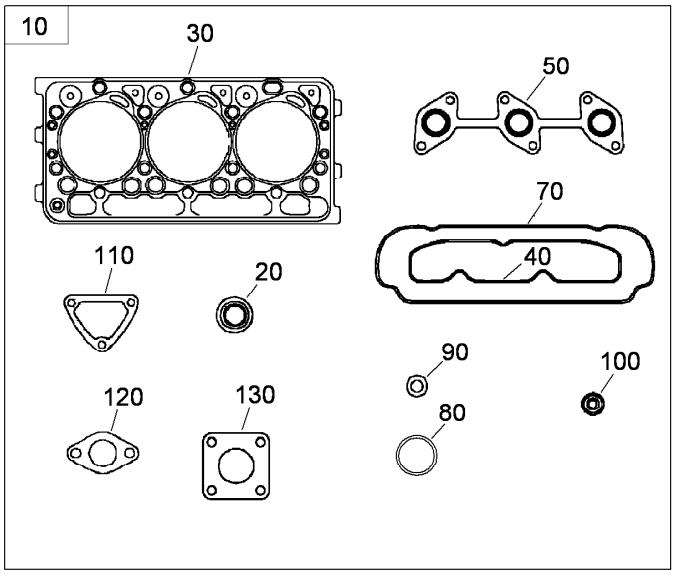

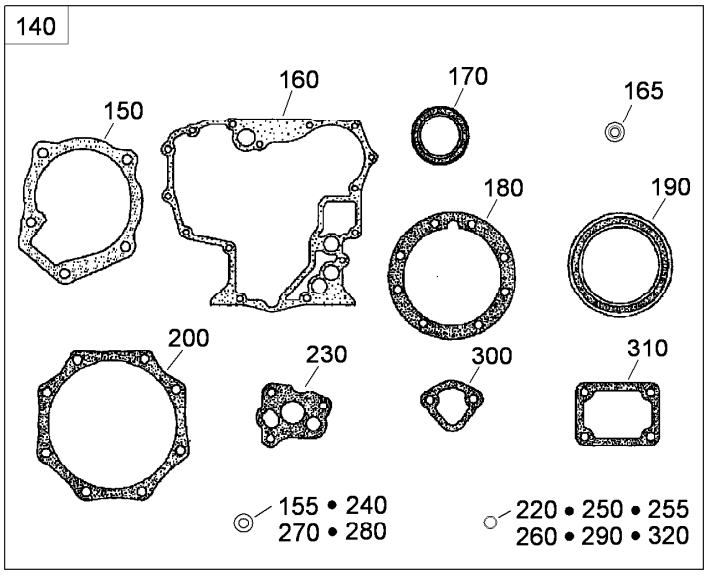

Engine Gasket Kits

Ref.	Part Number	Qty.	Description
10	112-2518	1	Upper Gasket Kit
20	100-1797	6	Seal-Stem, Valve
30	112-2520	1	Gasket-Head, Cylinder
40	110-3838	1	Gasket-Manifold, Intake
50	110-3840	1	Gasket-Manifold, Exhaust
70	112-2521	1	Gasket-Cover, Head
80	99-3446	1	O-Ring
90	98-7676	3	Gasket
100	98-7677	3	Seal-Heat
110	110-3820	1	Gasket-Flange, Water
120	105-3748	1	Gasket-Thermostat
130	99-8343	1	Gasket-Muffler
140	117-1706	1	Lower Gasket Kit
150	117-0330	1	Gasket-Pump, Water
155	98-7524	1	Gasket
160	117-0327	1	Gasket-Case, Gear
165	112-8325	1	Washer

Ref.	Part Number	Qty.	Description
170	100-1971	1	Seal-Oil
180	112-2812	1	Gasket-Case, Bearing
190	110-3724	1	Seal-Oil
200	100-1876	1	Gasket-Cover, Case
220	100-2209	1	O-Ring
230	100-2003	1	Gasket-Pump, Oil
240	98-7654	1	Gasket
250	100-2208	1	O-Ring
255	98-9722	1	O-Ring
260	100-2207	1	O-Ring
270	98-7654	2	Gasket
280	110-9715	1	Gasket-Pan, Oil
290	105-3776	1	O-Ring
300	98-9636	1	Gasket-Pump, Fuel
310	100-1962	1	Gasket-Plate, Control
320	110-3762	1	O-Ring

Attachments and Accessories

For 22324 TX 525 Wide Track Compact Utility Loader

Product Name	Model/Part
Light Kit	100-8840
Road Wheel Kit	106-7620
Reference Guide Kit	107-9310
Track-Aggressive Tread, Wide	108-9749
4 Cubic Foot Standard Bucket	22409
Loose Materials Bucket	22410
48in Hydraulic Blade	22414
Rotary Broom	22415
Bore Drive Head	22420
Rod and Reamer	22421
Multi-Purpose Tool	22423
Power Box Rake	22425
Stump Grinder	22429
Tree Forks	22438
Cement Bowl	22442
40in Tiller	22445
Snowthrower	22456
Crumber Kit	22464
Trencher Head	22470
High-Speed Trencher Head	22471
Trench Filler	22472
TX Platform	22476
Narrow Bucket	22520
Grapple Rake	22521
Auger Head	22805
Universal Swivel Auger Head	22806
6in Auger Bit	22810
9in Auger Bit	22811
12in Auger Bit	22812
15in Auger Bit	22813
18in Auger Bit	22814
24in Auger Bit	22815
30in Auger Bit	22816
12in Auger Bit Extension	22818
24in Auger Bit Extension	22819
Vibratory Plow	22911
Soil Cultivator	23101
Concrete Breaker	23135
Backhoe Fitup Kit	23162
Backhoe	23163
Adjustable Forks	23164
Leveler	23165
Spark Arrestor Screen	75-6880

Notes:



Count on it.