Operator’s Manual

Reelmaster® 7000-D 4-Wheel Drive Traction Unit

Model—Serial Range

03781—416800000 and Up

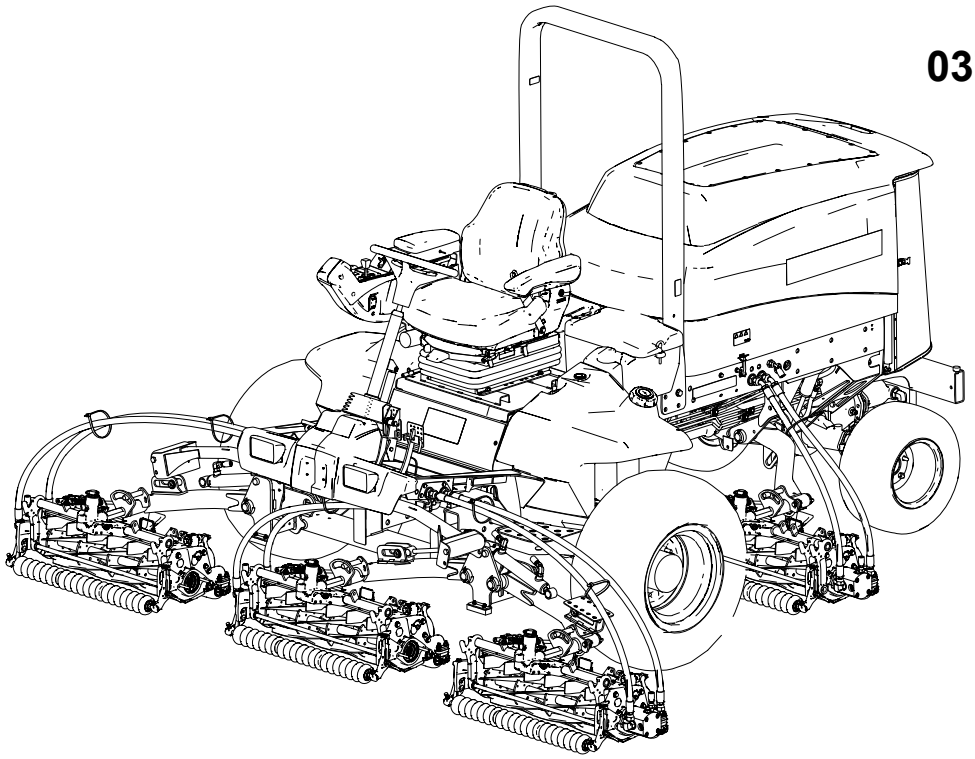

3467-370A

Original Instructions (EN)

*3467-370*A

Disclaimers and Regulatory Information

This product complies with all relevant European directives; for details, please see the separate product specific Declaration of Conformity (DOC) sheet.

It is a violation of California Public Resource Code Section 4442 or 4443 to use or operate the engine on any forest-covered, brush-covered, or grass-covered land unless the engine is equipped with a spark arrester, as defined in Section 4442, maintained in effective working order, or the engine is constructed, equipped, and maintained for the prevention of fire.

The enclosed engine owner's manual is supplied for information regarding the US Environmental Protection Agency (EPA) and the California Emission Control Regulation of emission systems, maintenance, and warranty. Replacements may be ordered through the engine manufacturer.

⚠ WARNING

CALIFORNIA
Proposition 65

Diesel engine exhaust and some of its constituents are known to the State of California to cause cancer, birth defects, and other reproductive harm.

Battery posts, terminals, and related accessories contain lead and lead compounds, chemicals known to the State of California to cause cancer and reproductive harm. Wash hands after handling.

Use of this product may cause exposure to chemicals known to the State of California to cause cancer, birth defects, or other reproductive harm.

Table of Contents

Disclaimers and Regulatory Information 2
Chapter 1: Introduction 1–1
- Intended Use 1–1
- Getting Help 1–1
- Manual Conventions 1–2
  - Safety Alert Classifications 1–2

Chapter 2: Safety 2–1
- General Safety 2–1
- Before Operation Safety 2–1
  - Fuel Safety 2–2
- During Operation Safety 2–2
  - Rollover Protection System (ROPS) Safety 2–3
  - Machines with a Foldable Roll Bar 2–3
  - Slope Safety 2–4
- After Operation Safety 2–4
- Maintenance Safety 2–5
  - Engine Safety 2–5

© 2023—The Toro® Company

8111 Lyndale Ave So
Bloomington, MN 55044

Contact us at www.Toro.com

Printed in the USA

All rights reserved

Electrical System Safety 2–5
Cooling System Safety 2–6
Hydraulic System Safety 2–6
Blade Safety 2–6
Storage Safety 2–6
Safety and Instructional Decals 2–7
Chapter 3: Setup 3–1
1 Adjusting the Front Cutting Unit Roller Position 3–1
2 Installing the Cutting Units 3–1
Preparing the Machine 3–1
Preparing the Cutting Units 3–2
Positioning the Turf Compensating Spring and Installing the Hose Guide 3–2
Installing the Hose Guide 3–4
Positioning the Turf Compensating Spring 3–6
Installing the Kickstand 3–8
Increasing the Rear Cutting Unit Pivot Angle 3–8
Preparing to Install the Cutting Units 3–9
Installing the Front Cutting Units 3–9
Installing the Rear Cutting Units to the Lift Arms 3–9
Installing the Rear Cutting Units to the Lift Arms 3–10
Installing the Cutting Unit Lift-Arm Chains 3–11
Installing the Reel Motors 3–11
Entering Cutting Unit Settings 3–12
3 Preparing the Machine 3–12
Chapter 4: Product Overview 4–1
Controls 4–1
Traction Pedal 4–2
Tilt-Steering Pedal 4–2
Brake Pedals 4–2
Pedal-Locking Latch 4–3
Parking-Brake Pedal 4–3
Key Switch 4–3
Headlight Switch 4–3
Lower Mow/Raise Control Lever 4–4
Throttle-Control Lever 4–4
Mow-Speed Limiter 4–4
Power Point 4–5
Bag Holder 4–5
InfoCenter Display 4–5
Backlap Levers 4–6
Power-Takeoff (PTO) Switch 4–6
Fuel Gauge 4–6
Seat Controls 4–7
Specifications 4–8
Attachments/Accessories 4–8
Chapter 5: Operation 5–1
Before Operation 5–1
Performing Daily Maintenance 5–1
Fuel 5–1
Checking the Interlock Switches 5–3
Checking the Parking Brake and Traction Pedal Run-Interlock 5–4
Overview of the InfoCenter Display 5–5
During Operation 5–11

Starting the Engine 5–11
Shutting Off the Engine 5–12
Locking the Cutting-Unit Pivot 5–12
Adjusting the Turf-Compensation Spring 5–13
Cutting Grass with the Machine 5–13
Driving the Machine in Transport Mode 5–14
Adjusting the Cutting-Unit Counterbalance 5–15
Adjusting the Cutting Unit-Turnaround Height 5–17
Folding the Roll Bar 5–17
Raising the Roll Bar 5–19
Operating Tips 5–20
After Operation 5–20
Pushing or Towing the Machine 5–20
Preparing the Machine to Push or Tow in Reverse 5–21
Preparing the Machine for Operation 5–22
Pushing or Towing the Machine Forward 5–22
Tie-Down Point Locations 5–23
Hauling the Machine 5–23
Chapter 6: Maintenance 6–1
Recommended Maintenance Schedule 6–1
Daily Maintenance Checklist 6–4
Pre-Maintenance Procedures 6–5
Preparing for Maintenance 6–5
Opening the Hood 6–5
Closing the Hood 6–6
Accessing the Battery Compartment 6–6
Tilting the Seat 6–7
Lowering the Seat 6–7
Jacking Point Locations 6–8
Lubrication 6–9
Greasing the Bearings and Bushings 6–9
Grease Fitting Locations 6–10
Engine Maintenance 6–12
Engine Oil Specifications 6–12
Checking the Engine-Oil Level 6–12
Changing the Engine Oil and Filter 6–14
Servicing the Air Cleaner 6–16
Fuel System Maintenance 6–18
Inspecting the Fuel Lines and Connections 6–18
Draining the Fuel/Water Separator 6–19
Replacing the Water-Separator Filter 6–20
Draining and Cleaning the Fuel Tank 6–20
Cleaning the Fuel-Intake Screen 6–20
Electrical System Maintenance 6–21
Disconnecting the Battery 6–21
Connecting the Battery 6–22
Charging the Battery 6–22
Servicing the Battery 6–22
Replacing a Fuse 6–23
Drive System Maintenance 6–24
Checking the Tire Pressure 6–24
Torquing the Wheel Nuts 6–24
Checking for End-Play in the Planetary Drives 6–25

Checking the Planetary Gear-Drive Lubricant 6–25
Changing the Planetary-Gear-Drive Oil 6–26
Inspecting the Rear Axle 6–28
Checking the Oil Level of the Rear Axle 6–29
Changing the Oil in the Rear Axle 6–29
Inspecting the Reduction-Gear Case 6–29
Checking the Lubricant in the Reduction-Gear Case 6–30
Mow Speed-Spacer Table 6–30
Adjusting Maximum Mow-Ground Speed 6–30
Adjusting the Traction Drive for Neutral 6–32
Checking the Rear-Wheel Alignment 6–33
Adjusting the Rear-Wheel Toe-In 6–33
Cooling System Maintenance 6–34
Coolant Specifications 6–34
Checking the Coolant Level 6–35
Servicing the Engine Cooling System 6–37
Brake Maintenance 6–39
Adjusting the Service Brakes 6–39
Belt Maintenance 6–41
Tensioning the Alternator Belt 6–41
Hydraulic System Maintenance 6–41
Inspecting the Hydraulic Lines and Hoses 6–41
Hydraulic Fluid Specifications 6–41
Checking the Hydraulic-Fluid Level 6–42
Replacing the Hydraulic Filters 6–43
Changing the Hydraulic Fluid 6–44
Cutting Unit Maintenance 6–46
Backlapping the Cutting Units 6–46
Chassis Maintenance 6–49
Inspecting the Seat Belt 6–49
Cleaning 6–50
Washing the Machine 6–50
Chapter 7: Storage 7–1
Storing the Machine 7–1
Storing the Battery 7–1
The Toro Warranty
California Proposition 65 Warning Information

Intended Use

This machine is a ride-on, reel-blade lawn mower intended to be used by professional, hired operators in commercial applications. It is primarily designed for cutting grass on well-maintained turf. Using this product for purposes other than its intended use could prove dangerous to you and bystanders.

Read this information carefully to learn how to operate and maintain your product properly and to avoid injury and product damage. You are responsible for operating the product properly and safely.

Getting Help

Visit www.Toro.com for product safety and operation training materials, accessory information, help finding a dealer, or to register your product.

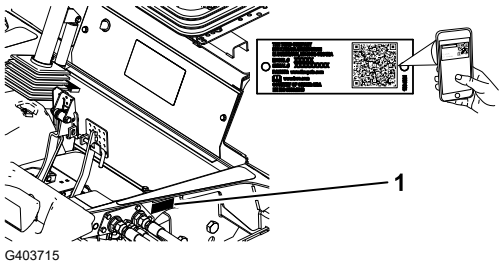

G403715

Whenever you need service, genuine Toro parts, or additional information, contact an Authorized Service Dealer or Toro Customer Service and have the model and serial numbers of your product ready. These numbers are located on the serial plate on your product (1). Write the numbers in the space provided.

IMPORTANT

With your mobile device, you can scan the QR code on the serial number decal (if equipped) to access warranty, parts, and other product information.

Model Number:		**Serial Number:**	

Manual Conventions

This manual identifies potential hazards and has safety messages identified by the safety-alert symbol, which signals a hazard that may cause serious injury or death if you do not follow the recommended precautions.



G405934

This manual uses 2 words to highlight information. **Important** calls attention to special mechanical information and **Note** emphasizes general information worthy of special attention.

Safety Alert Classifications

The safety-alert symbol shown in this manual and on the machine identifies important safety messages that you must follow to prevent accidents.

Safety-alert symbol appears above information that alerts you to unsafe actions or situations and is followed by the word **DANGER**, **WARNING**, or **CAUTION**.

DANGER

Danger indicates an imminently hazardous situation which, if not avoided, *will* result in death or serious injury.

WARNING

Warning indicates a potentially hazardous situation which, if not avoided, *could* result in death or serious injury.

CAUTION

Caution indicates a potentially hazardous situation which, if not avoided, *may* result in minor or moderate injury.

General Safety

- This product is capable of amputating hands and feet and of throwing objects.
- Read and understand the contents of this *Operator's Manual* before starting the engine.
- Use your full attention while operating the machine. Do not engage in any activity that causes distractions; otherwise, injury or property damage may occur.
- Do not put your hands or feet near moving components of the machine.
- Do not operate the machine without all guards and other safety protective devices in place and functioning properly on the machine.
- Keep bystanders and children out of the operating area. Never allow children to operate the machine.
- Shut off the engine, remove the key, and wait for all movement to stop before you leave the operator's position. Allow the machine to cool before adjusting, servicing, cleaning, or storing it.

Improperly using or maintaining this machine can result in injury. To reduce the potential for injury, comply with these safety instructions and always pay attention to the safety-alert symbol ⚠, which means **Caution**, **Warning**, or **Danger**—personal safety instruction. Failure to comply with these instructions may result in personal injury or death.

Before Operation Safety

- Never allow children or untrained people to operate or service the machine. Local regulations may restrict the age of the operator. The owner is responsible for training all operators and mechanics.
- Become familiar with the safe operation of the machine, operator controls, and safety signs.
- Before you leave the operator's position, do the following:.
  - Park the machine on a level surface
  - Disengage and lower the cutting units.
  - Engage the parking brake.
  - Shut off the engine and remove the key.
  - Wait for all movement to stop.
  - Allow the machine to cool before adjusting, servicing, cleaning, or storing it.
- Know how to stop the machine and shut off the engine quickly.
- Do not operate the machine without all guards and other safety protective devices in place and functioning properly on the machine.

- Before mowing, always inspect the machine to ensure that the cutting units are in good working condition.
- Inspect the area where you will use the machine and remove all objects that the machine could throw.
- This product generates an electromagnetic field. If you wear an implantable electronic medical device, consult your health care professional before using this product.

Fuel Safety

- Use extreme care in handling fuel. It is flammable and its vapors are explosive.
- Extinguish all cigarettes, cigars, pipes, and other sources of ignition.
- Use only an approved fuel container.
- Do not remove the fuel cap or fill the fuel tank while the engine is running or hot.
- Do not add or drain fuel in an enclosed space.
- Do not store the machine or fuel container where there is an open flame, spark, or pilot light, such as on a water heater or other appliance.
- If you spill fuel, do not attempt to start the engine; avoid creating any source of ignition until the fuel vapors have dissipated.

During Operation Safety

- The owner/operator can prevent and is responsible for accidents that may cause personal injury or property damage.
- Wear appropriate clothing, including eye protection; long pants; substantial, slip-resistant footwear; and hearing protection. Tie back long hair and do not wear loose clothing or loose jewelry.
- Do not operate the machine while ill, tired, or under the influence of alcohol or drugs.
- Use your full attention while operating the machine. Do not engage in any activity that causes distractions; otherwise, injury or property damage may occur.
- Before you start the engine, ensure that all drives are in neutral, the parking brake is engaged, and you are in the operating position.
- Do not carry passengers on the machine and keep bystanders and children out of the operating area.
- Operate the machine only in good visibility to avoid holes or hidden hazards.
- Avoid mowing on wet grass. Reduced traction could cause the machine to slide.
- Keep your hands and feet away from the cutting units.
- Look behind and down before backing up to be sure of a clear path.
- Use care when approaching blind corners, shrubs, trees, or other objects that may obscure your vision.
- Stop the cutting units whenever you are not mowing.
- Slow down and use caution when making turns and crossing roads and sidewalks with the machine. Always yield the right-of-way.

- Operate the engine only in well-ventilated areas. Exhaust gasses contain carbon monoxide, which is lethal if inhaled.
- Do not leave a running machine unattended.
- Before you leave the operator's position, do the following:
  - Park the machine on a level surface.
  - Disengage and lower the cutting units.
  - Engage the parking brake.
  - Shut off the engine and remove the key.
  - Wait for all movement to stop.
  - Allow the machine to cool before adjusting, servicing, cleaning, or storing it.
- Operate the machine only in good visibility and appropriate weather conditions. Do not operate the machine when there is the risk of lightning.
- Use the cruise control (if equipped) only when you can operate the machine in an open, flat area that is free from obstacles and where the machine can move at a constant speed without interruption.

Rollover Protection System (ROPS) Safety

- Do not remove any of the ROPS components from the machine.
- Ensure that the seat belt is attached and that you can release it quickly in an emergency.
- Always wear your seat belt.
- Check carefully for overhead obstructions and do not contact them.
- Keep the ROPS in safe operating condition by thoroughly inspecting it periodically for damage and keeping all the mounting fasteners tight.
- Replace all damaged ROPS components. Do not repair or alter them.

Machines with a Foldable Roll Bar

- Always use the seat belt with the roll bar in the raised position.
- The ROPS is an integral safety device. Keep a folding roll bar in the raised and locked position, and use the seat belt when operating the machine with the roll bar in the raised position.
- Lower a folding roll bar temporarily only when necessary. Do not wear the seat belt when the roll bar is folded down.
- Be aware that there is no rollover protection when a folded roll bar is in the down position.
- Check the area that you will be mowing and never fold down a folding roll bar in areas where there are slopes, drop-offs, or water.

Slope Safety

- Slopes are a major factor related to loss of control and rollover accidents, which can result in severe injury or death. You are responsible for safe slope operation. Operating the machine on any slope requires extra caution.
- Evaluate the site conditions to determine if the slope is safe for machine operation, including surveying the site. Always use common sense and good judgment when performing this survey.
- Review the slope instructions, listed below, for operating the machine on slopes. Before you operate the machine, review the site conditions to determine whether you can operate the machine in the conditions on that day and at that site. Changes in the terrain can result in a change in slope operation for the machine.
  - Avoid starting, stopping, or turning the machine on slopes. Avoid making sudden changes in speed or direction. Make turns slowly and gradually.
  - Do not operate a machine under any conditions where traction, steering, or stability is in question.
  - Remove or mark obstructions such as ditches, holes, ruts, bumps, rocks, or other hidden hazards. Tall grass can hide obstructions. Uneven terrain could overturn the machine.
  - Be aware that operating the machine on wet grass, across slopes, or downhill may cause the machine to lose traction.
  - Use extreme caution when operating the machine near drop-offs, ditches, embankments, water hazards, or other hazards. The machine could suddenly roll over if a wheel goes over the edge or the edge caves in. Establish a safety area between the machine and any hazard.
  - Identify hazards at the base of the slope. If there are hazards, mow the slope with a pedestrian-controlled machine.
  - If possible, keep the cutting units lowered to the ground while operating on slopes. Raising the cutting units while operating on slopes can cause the machine to become unstable.

After Operation Safety

- Park the machine on a level surface.
- Disengage and lower the cutting units
- Engage the parking brake.
- Shut off the engine and remove the key.
- Wait for all movement to stop.
- Allow the machine to cool before adjusting, servicing, cleaning, or storing it.
- To help prevent fires, ensure that the cutting units, drives, mufflers, cooling screens, and engine compartment are free from grass and debris buildup. Clean up oil or fuel spills.
- Disengage the drive to the attachment whenever you are hauling or not using the machine.
- Maintain and clean the seat belt(s) as necessary.

- Do not store the machine or fuel container where there is an open flame, spark, or pilot light, such as on a water heater or on other appliances.

Maintenance Safety

- Before you leave the operator's position, do the following:
  - Park the machine on a level surface.
  - Disengage and lower the cutting units.
  - Engage the parking brake.
  - Shut off the engine and remove the key.
  - Wait for all movement to stop.
  - Allow the machine to cool before adjusting, servicing, cleaning, or storing it.
- Wear appropriate clothing, including eye-protection; long pants and substantial, slip-resistant footwear. Keep hands, feet, clothing, jewelry, and long hair away from moving parts.
- Allow machine components to cool before performing maintenance.
- If possible, do not perform maintenance while the engine is running. Keep away from moving parts.
- Operate the engine only in well-ventilated areas. Exhaust gases contain carbon monoxide, which is lethal if inhaled.
- Support the machine with jack stands whenever you work under the machine.
- Carefully release pressure from components with stored energy.
- Keep all parts of the machine in good working condition and all hardware tightened.
- Replace all worn or damaged decals.
- To ensure safe, optimal performance of the machine, use only genuine Toro replacement parts. Replacement parts made by other manufacturers could be dangerous, and such use could void the product warranty.

Engine Safety

- Shut off the engine before checking the oil or adding oil to the crankcase.
- Do not change the governor speed or overspeed the engine.

Electrical System Safety

- Disconnect the battery before repairing the machine. Disconnect the negative terminal first and the positive last. Connect the positive terminal first and the negative last.
- Charge the battery in an open, well-ventilated area, away from sparks and flames. Unplug the charger before connecting or disconnecting the battery. Wear protective clothing and use insulated tools.

Cooling System Safety

- Swallowing engine coolant can cause poisoning; keep out of reach from children and pets.
- Discharge of hot, pressurized coolant or touching a hot radiator and surrounding parts can cause severe burns.
  - Always allow the engine to cool at least 15 minutes before removing the radiator cap.
  - Use a rag when opening the radiator cap, and open the cap slowly to allow steam to escape.

Hydraulic System Safety

- Seek immediate medical attention if fluid is injected into skin. Injected fluid must be surgically removed within a few hours by a doctor.
- Ensure that all hydraulic-fluid hoses and lines are in good condition and all hydraulic connections and fittings are tight before applying pressure to the hydraulic system.
- Keep your body and hands away from pinhole leaks or nozzles that eject high-pressure hydraulic fluid.
- Use cardboard or paper to find hydraulic leaks.
- Safely relieve all pressure in the hydraulic system before performing any work on the hydraulic system.

Blade Safety

- A worn or damaged blade or bedknife can break, and a piece could be thrown toward you or bystanders, resulting in serious personal injury or death.
- Inspect the blades and bedknives periodically for excessive wear or damage.
- Use care when checking the blades. Wear gloves and use caution when servicing them. Only replace or backlap the blades and bedknives; never straighten or weld them.
- On machines with multiple cutting units, take care when rotating a cutting unit; it can cause the reels in the other cutting units to rotate.

Storage Safety

- Before you leave the operator’s position, do the following:
  - Park the machine on a level surface.
  - Disengage and lower the cutting units.
  - Engage the parking brake.
  - Shut off the engine and remove the key.
  - Wait for all movement to stop.
  - Allow the machine to cool before adjusting, servicing, cleaning, or storing it.
- Do not store the machine or fuel container where there is an open flame, spark, or pilot light, such as on a water heater or other appliance.

Safety and Instructional Decals

Safety decals and instructions are easily visible to the operator and are located near any area of potential danger. Replace any decal that is damaged or missing.

Battery Symbols

Some or all of these symbols are on your battery.



s_batterysymbols2

1. Explosion hazard
2. No fire, open flame, or smoking
3. Caustic liquid/chemical burn hazard
4. Wear eye protection.
5. Read the *Operator's Manual*.
6. Keep bystanders away from the battery.
7. Wear eye protection; explosive gases can cause blindness and other injuries.
8. Battery acid can cause blindness or severe burns.
9. Flush eyes immediately with water and get medical help fast.
10. Contains lead; do not discard

Decal Part: 93-6680

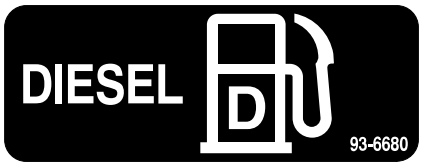

s_decal93-6680

Decal Part: 93-6686

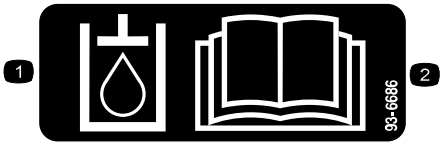

s_decal93-6686

1. Hydraulic fluid
2. Read the *Operator's Manual*.

Decal Part: 98-4387



s_decal98-4387

1. Warning—wear hearing protection.

Decal Part: 106-6754

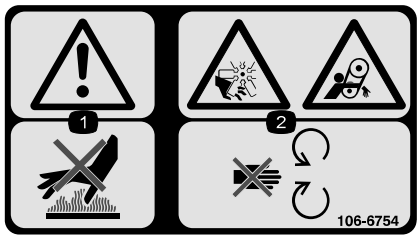

s_decal106-6754

1 Warning—do not touch the hot surface.

2 Cutting/dismemberment hazard, fan; entanglement hazard, belt—stay away from moving parts.

Decal Part: 106-6755



s_decal106-6755

1 Engine coolant under pressure.

2 Explosion hazard—read the *Operator's Manual*.

3 Warning—do not touch the hot surface.

4 Warning—read the *Operator's Manual*.

Decal Part: 110-9642

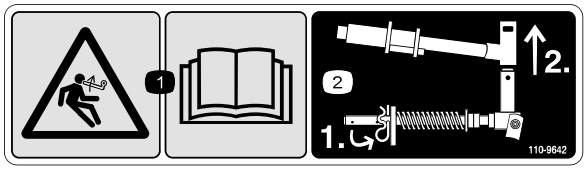

s_decal110-9642

1 Stored energy hazard—read the *Operator's Manual*.

2 Move the cotter pin to the hole closest to the rod bracket and then remove the lift arm and pivot yoke.

Decal Part: 117-4763

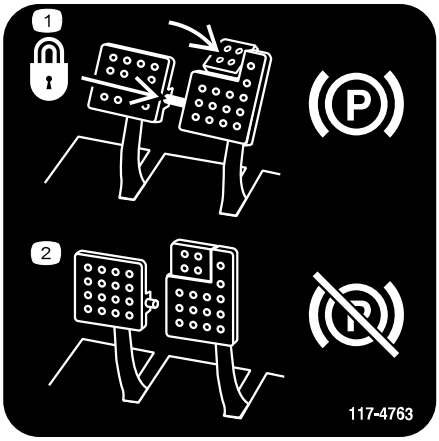

s_decal117-4763

1 To engage the parking brake, secure the brake pedals with the locking pin, press the parking-brake pedals and engage the toe pedal.

2 To disengage the parking brake, disengage the locking pin and release the pedals.

Decal Part: 117-4765

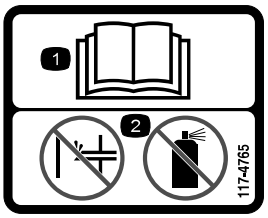

s_decal117-4765

1. Read the *Operator's Manual*.
2. Do not use starting aids.

Decal Part: 117-4766

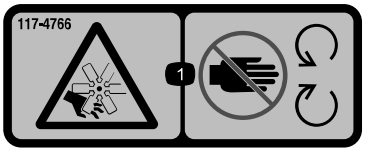

s_decal117-4766

1. Cutting/dismemberment hazard; fan—stay away from moving parts, keep all guards and shields in place.

Decal Part: 120-1670

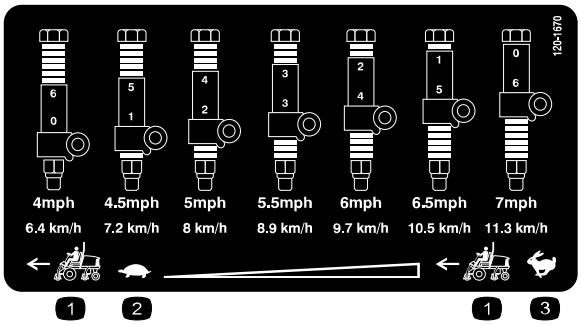

s_decal120-1670

1. Traction unit speed
2. Slow
3. Fast

Decal Part: 120-1683

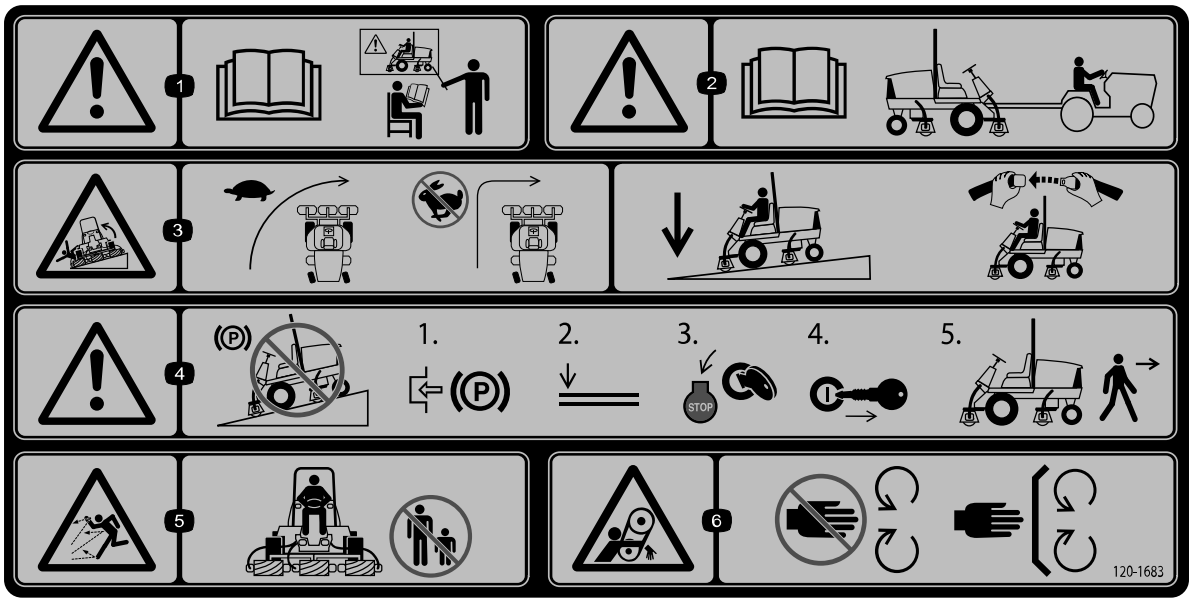

s_decal120-1683

1. Warning—read the *Operator's Manual*; all operators should be trained before operating the machine.
2. Warning—read the *Operator's Manual* before towing the machine.
3. Tipping hazard—drive slowly when turning; do not turn sharply while traveling fast; lower the cutting units when driving down slopes; use a rollover protection system and wear the seatbelt.
4. Warning—do not park the machine on slopes; engage the parking brake, lower the cutting units, shut off the engine, and remove the key before leaving the machine.
5. Thrown object hazard—keep bystanders away.
6. Entanglement hazard, belt—stay away from moving parts; keep all guards and shields in place.

Decal Part: 120-8947

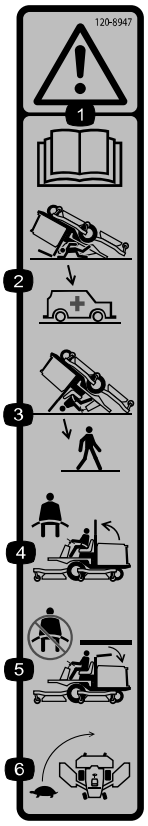

s_decal120-8947

1 Warning—read the *Operator's Manual*.

2 There is no rollover protection when the roll bar is down.

3 There is rollover protection when the roll bar is up.

4 If the roll bar is raised, wear the seat belt.

5 If the roll bar is lowered, do not wear the seat belt.

6 Drive slowly when turning.

Decal Part: 121-3884

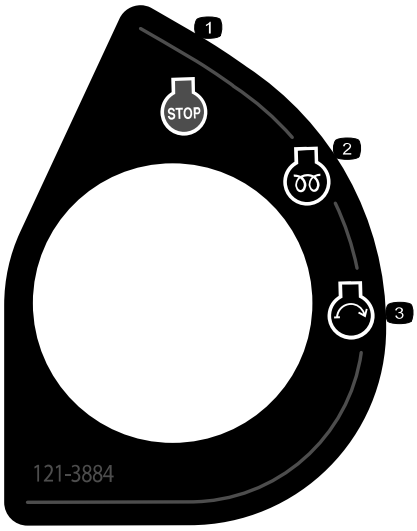

s_decal121-3884

1 Engine—stop

2 Engine—preheat

3 Engine—start

Decal Part: 121-3887

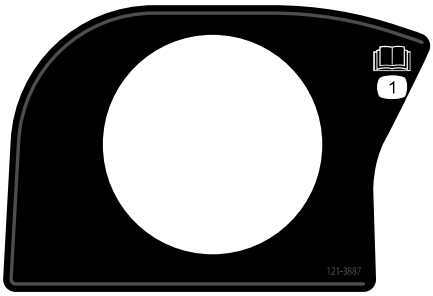

s_decal121-3887

1. Read the *Operator's Manual*.

Decal Part: 121-5644

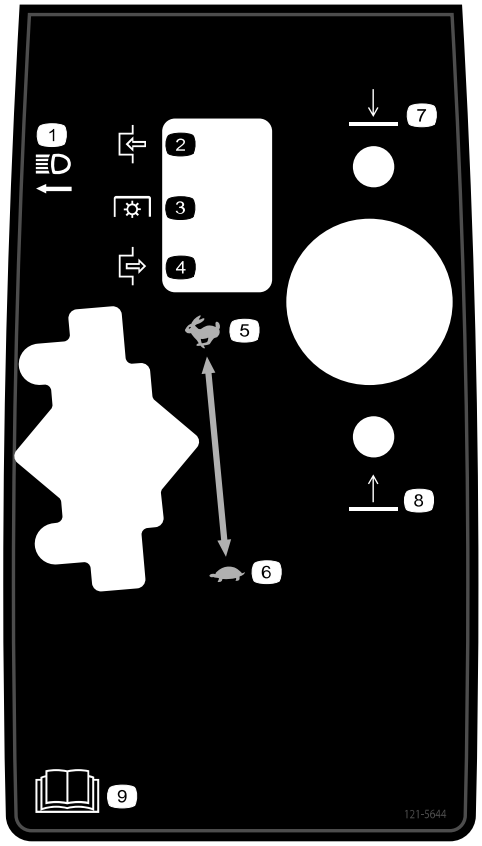

s_decal121-5644

1. Light switch
2. Engage
3. Power take-off
4. Disengage
5. Fast
6. Slow
7. Lower
8. Raise
9. Read the *Operator's Manual*.

Decal Part: 133-8062

⚠ WARNING: Cancer and Reproductive Harm - www.P65Warnings.ca.gov.
For more information, please visit www.ttcoCAProp65.com

CALIFORNIA SPARK ARRESTER WARNING

Operation of this equipment may create sparks that can start fires around dry vegetation. A spark arrester may be required. The operator should contact local fire agencies for laws or regulations relating to fire prevention requirements.

133-8062

s_decal133-8062

Decal Part: 136-3712

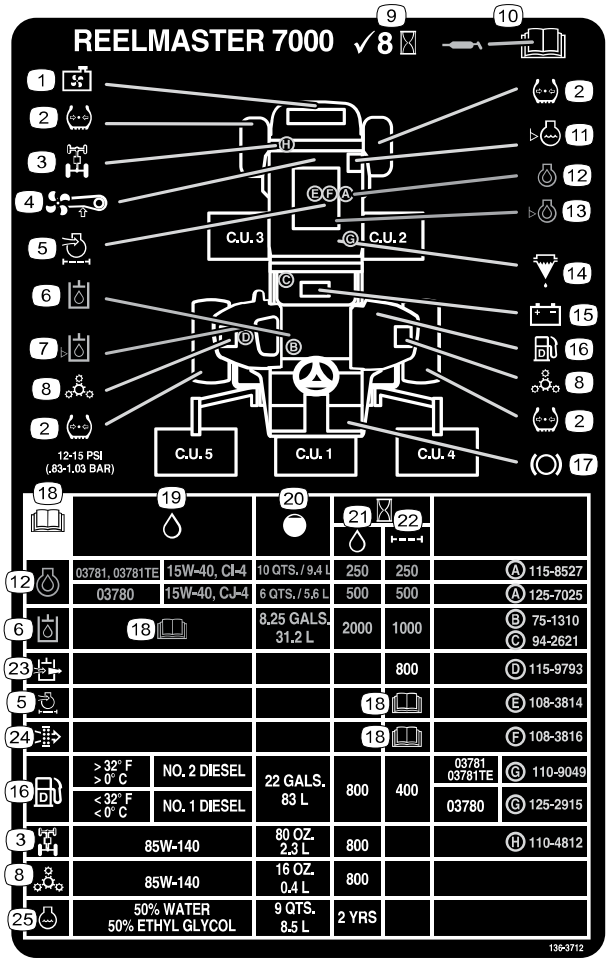

s_decal136-3712

1. Radiator screen
2. Tire pressure
3. Rear axle
4. Fan belt
5. Engine air filter
6. Hydraulic fluid
7. Hydraulic-fluid level
8. Planetary drive
9. Check every 8 hours.
10. Read the *Operator's Manual* for lubrication information.
11. Engine-coolant level
12. Engine oil
13. Engine-oil level
14. Fuel/water separator
15. Battery
16. Diesel fuel
17. Brake functions
18. Read the *Operator's Manual*.
19. Fluids
20. Capacity
21. Fluid interval (hours)
22. Filter interval (hours)
23. Hydraulic breather
24. Safety air filter
25. Engine coolant

Decal Part: 145-5258

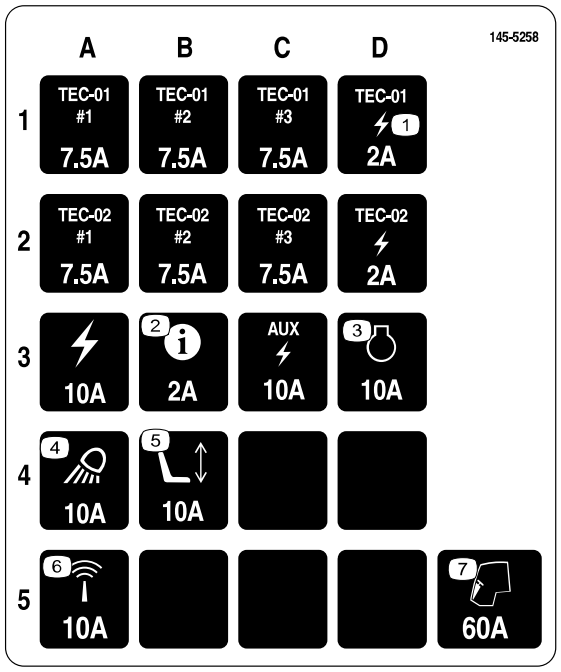

s_decal145-5258

1. Power
2. Info center
3. Engine
4. Work lights
5. Power seat
6. Sensor
7. Cab

1 Adjusting the Front Cutting Unit Roller Position

Check all cutting unit roller positions and adjust if needed.

- For 27-inch cutting units, use the upper mounting holes (2) of the roller support (1).
- For 32-inch cutting units, use the lower mounting holes (3) of the roller support.

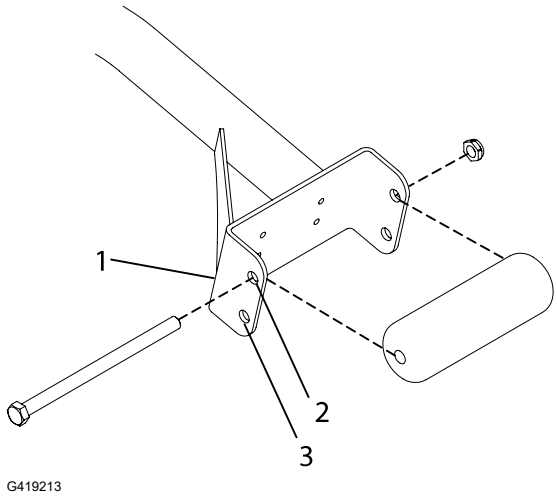

2 Installing the Cutting Units

Parts Required

1	Right front hose guide
1	Left front hose guide

Preparing the Machine

Remove the shipping brackets from the reel motors and discard.

Preparing the Cutting Units

1. Remove the cutting units from the cartons.
2. Assemble and adjust as described in the cutting unit *Operator's Manual*.
3. Make sure that the counterweight (1) is installed at the proper end of the cutting unit as described in the cutting unit *Operator's Manual*.

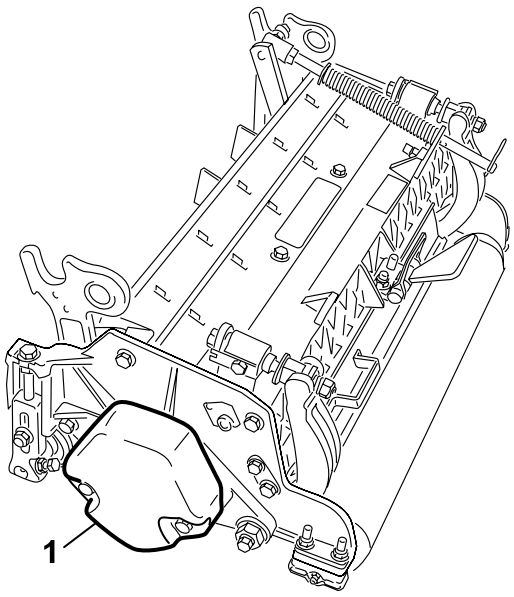

G409089

Positioning the Turf Compensating Spring and Installing the Hose Guide

Cutting Unit 4

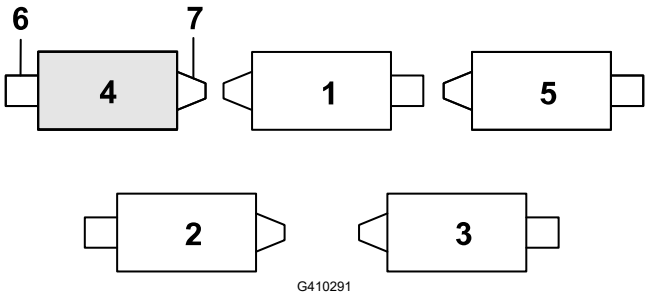

G410291

(1) Cutting unit 1
(2) Cutting unit 2
(3) Cutting unit 3
(4) Cutting unit 4
(5) Cutting unit 5
(6) Reel motor
(7) Weight

Positioning the Turf Compensating Spring and Installing the Hose Guide (continued)

1. If the hairpin [1] is installed in the rear hole of the compensation-spring rod, remove the hairpin and insert it in the hole next to the bracket.

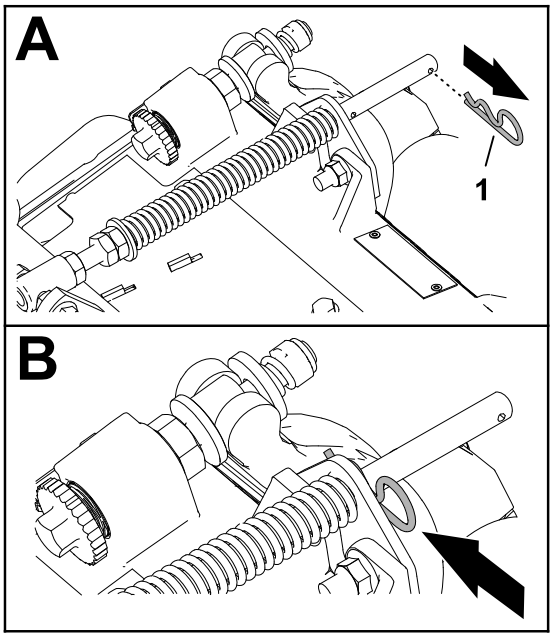

G410292

2. Remove the 2 flange locknuts (3/8 inch) [1] and 2 carriage bolts (3/8 x 1-1/4 inches) [3] that secure the turf-compensator bracket [2] to the cutting-unit frame.

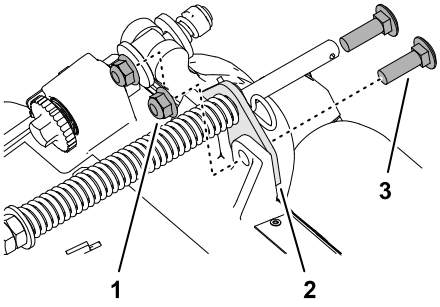

G402719

3. Remove the flange locknut (3/8 inch) [3] securing the bolt [1] to the right tab [2] of the carrier frame, and remove the compensation spring from the cutting unit.

   Note: Do not remove the flange serrated nut from the bolt.

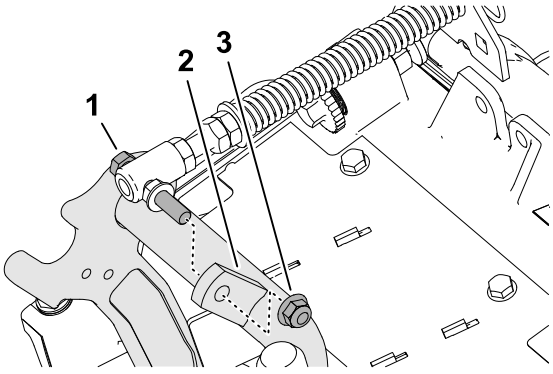

G410295

Positioning the Turf Compensating Spring and Installing the Hose Guide (continued)

4. Assemble the bolt (3) of the turf compensation spring to the right tab (2) of the carrier frame with the flange locknut (3/8 inch) (1).

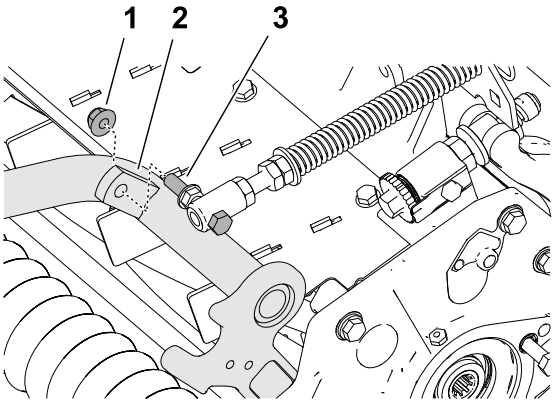

G410296

5. Align the studs (3) of the left hose guide with the holes in the cutting-unit frame and the turf-compensator bracket (1).

   Note: The support loop of the hose guide aligns toward the center of the machine (4).

6. Assemble the hose guide and turf-compensator bracket to the cutting-unit frame with the 2 flange locknuts (3/8 inch) (2).

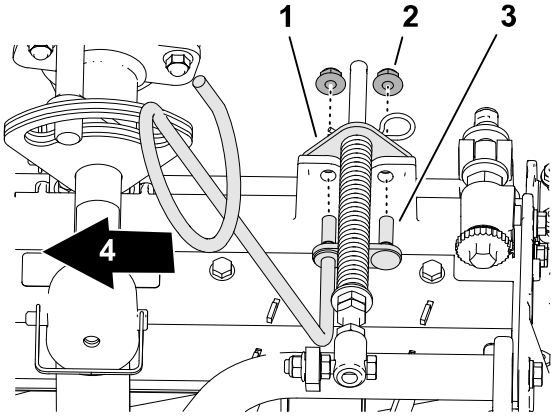

G410297

7. Torque the locknuts and bolts to **37 to 45 N·m (27 to 33 ft-lb)**.

Installing the Hose Guide

Cutting Unit 5

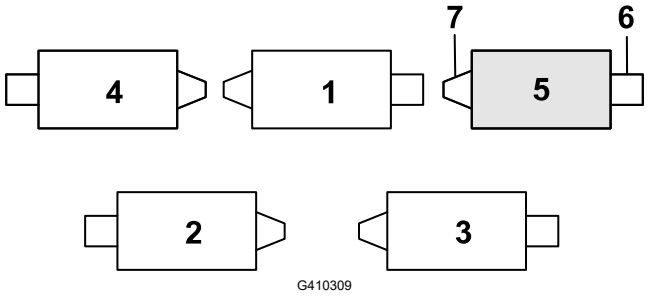

G410309

(1) Cutting unit 1
(2) Cutting unit 2
(3) Cutting unit 3
(4) Cutting unit 4
(5) Cutting unit 5
(6) Reel motor
(7) Weight

Installing the Hose Guide (continued)

1. If the hairpin [1] is installed in the rear hole of the compensation-spring rod, remove the hairpin and insert it in the hole next to the bracket.

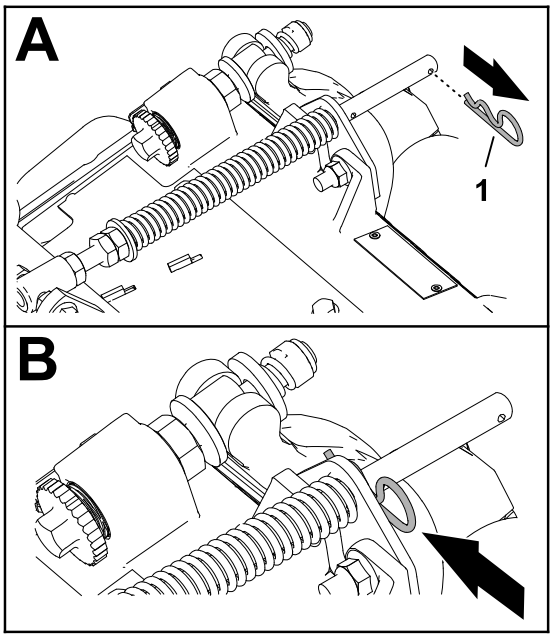

G410292

2. Remove the 2 flange locknuts (3/8 inch) [1] and 2 carriage bolts (3/8 x 1-1/4 inches) [3] that secure the turf-compensator bracket [2] to the cutting-unit frame.

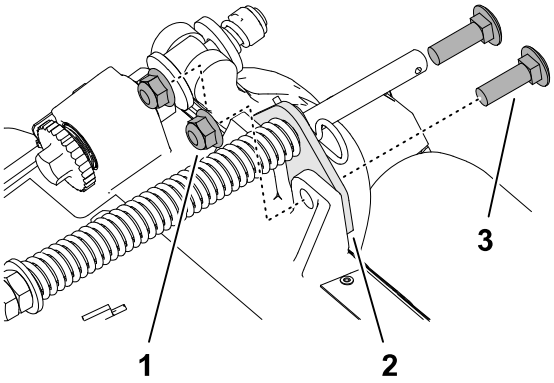

G410293

3. Align the studs [1] of the right hose guide with the holes in the cutting-unit frame and the turf-compensator bracket [2].

   Note: Ensure that the support loop of the hose guide aligns toward the center [4] of the machine.

4. Assemble the hose guide and turf-compensator bracket to the cutting-unit frame with the 2 flange locknuts (3/8 inch) [3].

5. Torque the locknuts to **37 to 45 N·m (27 to 33 ft-lb)**.

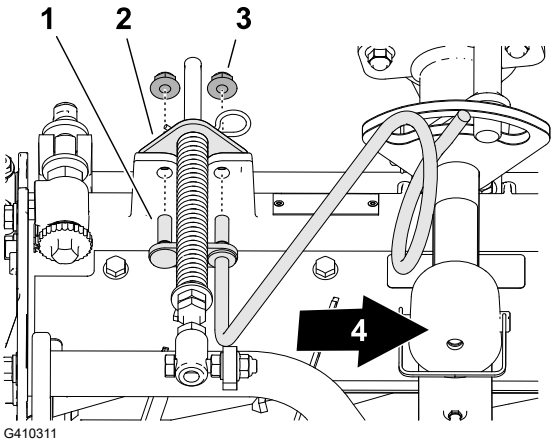

G410311

Positioning the Turf Compensating Spring

Cutting Unit 2

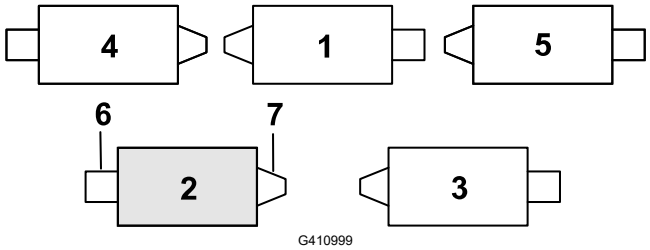

G410999

(1) Cutting unit 1
(2) Cutting unit 2
(3) Cutting unit 3
(4) Cutting unit 4
(5) Cutting unit 5
(6) Reel motor
(7) Weight

1. If the hairpin (1) is installed in the rear hole of the compensation-spring rod, remove the hairpin and insert it in the hole next to the bracket.

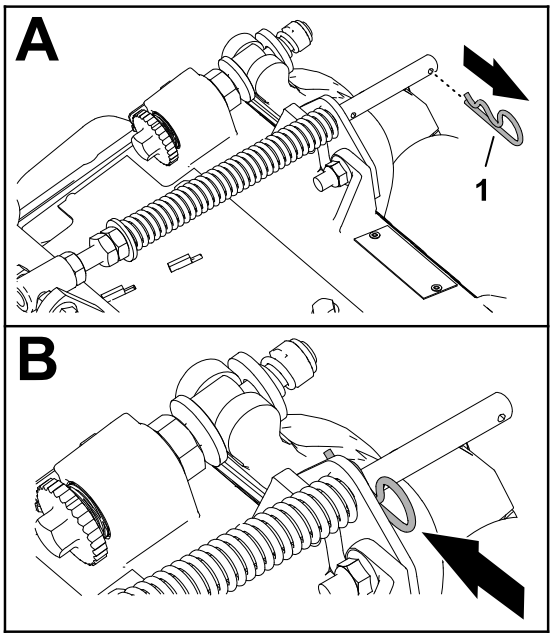

G410292

2. Remove the 2 flange locknuts (3/8 inch) (3) and 2 carriage bolts (3/8 x 1-1/4 inches) (1) that secure the turf-compensator bracket (2) to the cutting-unit frame.

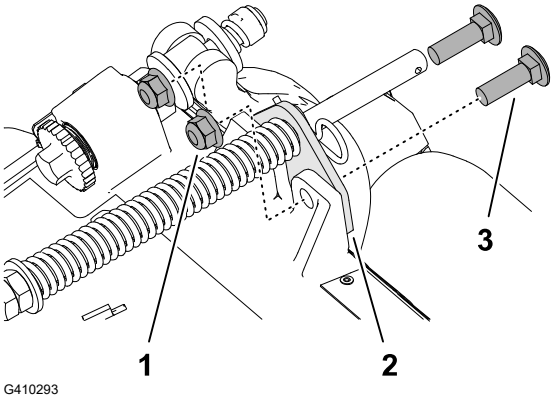

G410293

Positioning the Turf Compensating Spring (continued)

3. Remove the flange locknut (3/8 inch) ③ that secures the bolt ① of the turf compensation spring to the right tab ② of the carrier frame, and remove the compensation spring from the cutting unit.

   Note: Do not remove the flange serrated nut from the bolt.

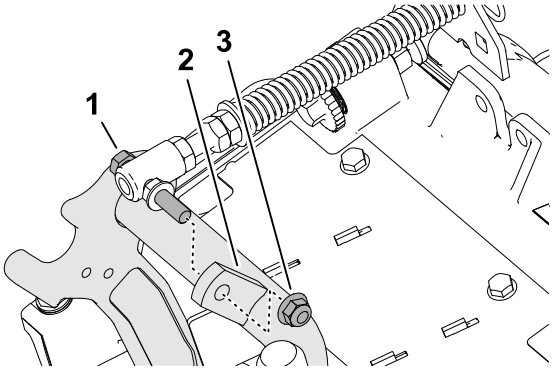

G410295

4. Assemble the bolt ③ of the turf compensation spring to the right tab ② of the carrier frame with the flange locknut (3/8 inch) ①.

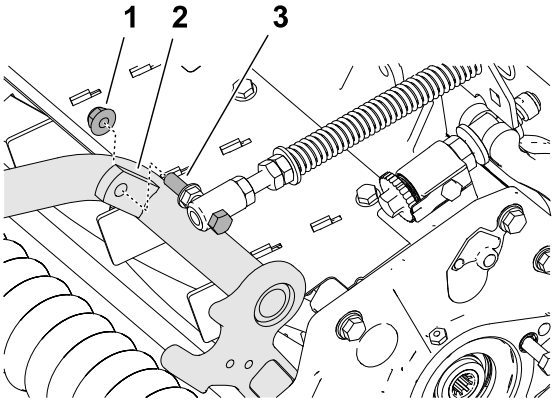

G410296

5. Align the holes in the turf-compensator bracket ① with the holes in the cutting-unit frame.

   Note: The support loop of the hose guide aligns toward the center of the machine ④.

6. Assemble the turf-compensator bracket to the cutting-unit frame with the 2 carriage bolts (3/8 x 1-1/4 inches) ② and 2 flange locknuts (3/8 inch) ③.

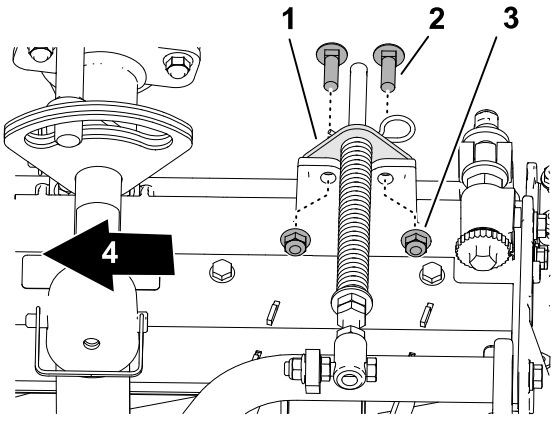

G411000

7. Torque the locknuts and bolts to **37 to 45 N·m (27 to 33 ft-lb)**.

Installing the Kickstand

For each cutting unit, secure the kickstand (3) to the chain bracket (1) with the snapper pin (2).

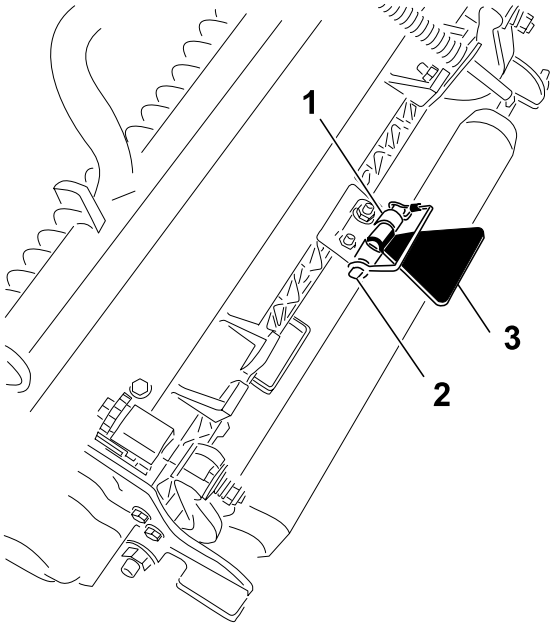

G411001

Increasing the Rear Cutting Unit Pivot Angle

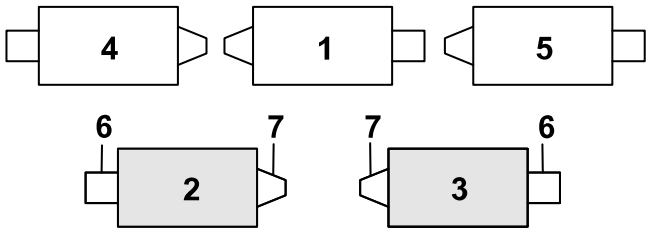

G419225

(1) Cutting unit 1
(2) Cutting unit 2
(3) Cutting unit 3
(4) Cutting unit 4
(5) Cutting unit 5
(6) Reel motor
(7) Weight

Increase the pivot angle of the rear cutting units by removing the 2 spacers (2) , 2 hex-socket screws (1) , and 2 flange locknuts (4) from the carrier frames (3) of cutting units 2 and 3.

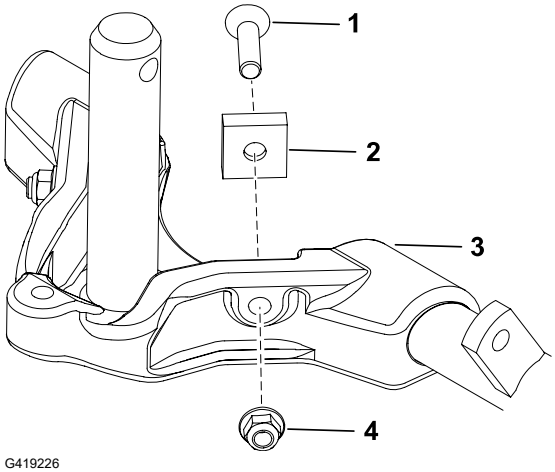

G419226

Preparing to Install the Cutting Units

1. Ensure that the countersunk thrust washer (1) is inserted over the carrier-frame shaft (2).
2. Grease the carrier-frame shaft.
3. Repeat this procedure for the other cutting units.

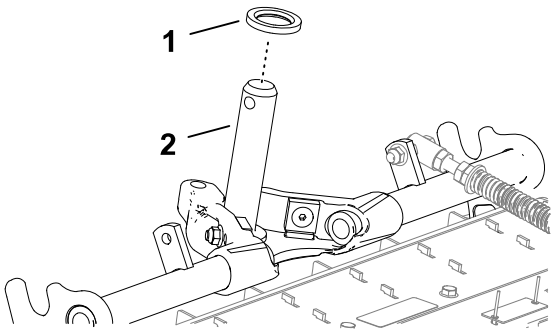

G419227

Installing the Front Cutting Units

Install the front cutting units as shown.

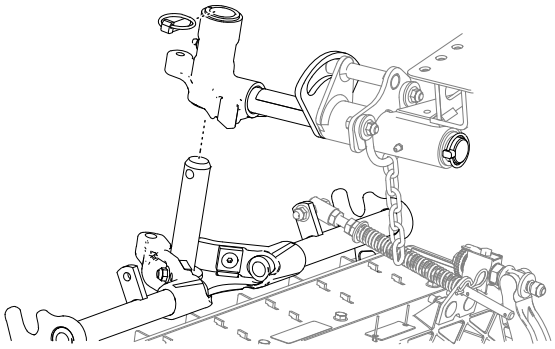
G419230

Installing the Rear Cutting Units to the Lift Arms

Cutting Units adjusted for a 1.2 cm (3/4 inch) or Higher Height of Cut

Install the rear cutting units to the lift arms as shown.

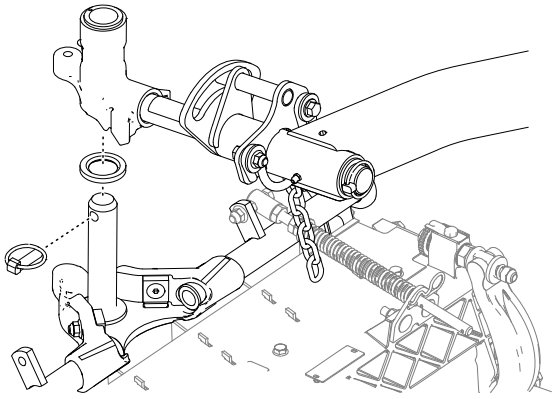
G420567

Installing the Rear Cutting Units to the Lift Arms

Cutting Units adjusted for a 1.2 cm (3/4 inch) or Lower Height of Cut

1. Slide the lift-arm pivot shaft ② out of the lift arm ① by removing the lynch pin ④ and washer ③.

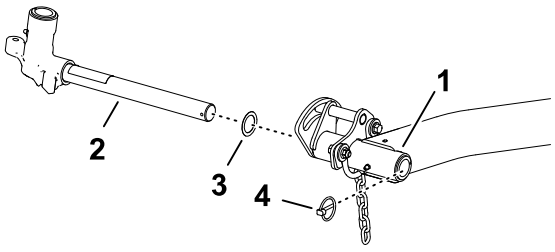

G420582

2. Slide the lift-arm yoke ① and washer ② onto the carrier frame shaft ③ and secure it with the lynch pin ④.
3. Slide a cutting unit under the lift arm.

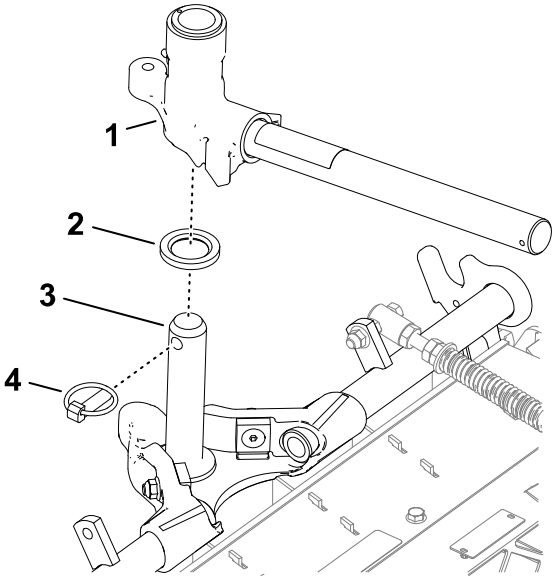

G420583

4. Slide the lift-arm pivot shaft ② and washer ③ onto of the lift arm ① and secure it with the lynch pin ④.
5. Repeat this procedure for the other rear cutting unit.

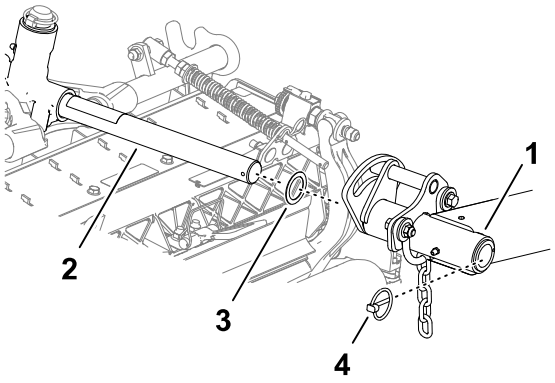

G420584

Installing the Cutting Unit Lift-Arm Chains

Secure the lift-arm chain ① to the chain bracket ② with the snapper pin ③.

Note: Use the number of chain links described in the cutting unit *Operator's Manual*.

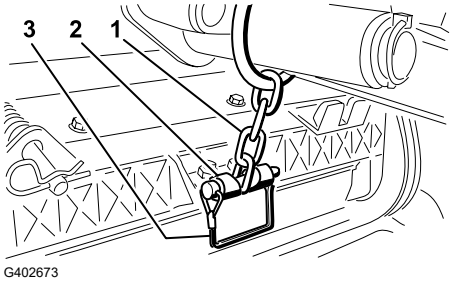

G402673

Installing the Reel Motors

1. Grease the reel-motor spline shaft.
2. Oil the reel motor O-ring and install it onto the motor flange.
3. Install the motor ① by rotating it clockwise so that the motor flanges clear the bolts ②.

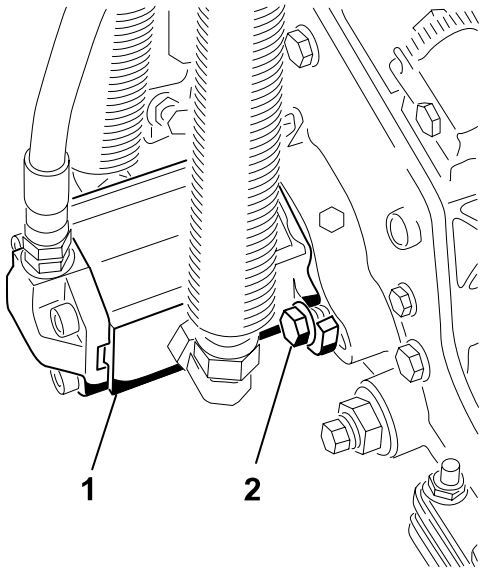

G411002

4. Rotate the motor counterclockwise until the flanges encircle the bolts, and then tighten the bolts.

IMPORTANT

Ensure that the reel motor hoses are not twisted, kinked, or at risk of being pinched.

5. Torque the mounting bolts to **37 to 45 N·m (27 to 33 ft-lb)**.

Entering Cutting Unit Settings

Use the PIN code to enter the following cutting-unit information into the InfoCenter:

- Blade count
- Mow speed
- Height of cut

3 Preparing the Machine

1. Park the machine on a level surface, lower the cutting units, and engage the parking brake.
2. Shut off the engine, remove the key, and wait for all moving parts to stop.
3. Check the tire air pressure before use.

   Note: The tires are overinflated for shipping. Adjust the tire air pressure before operating the machine.
4. Check the rear-axle lubricant level.
5. Check the hydraulic-fluid level.
6. Grease the machine.

IMPORTANT

Failure to properly grease the machine will result in premature failure of critical parts.

7. Open the hood and check the coolant level.
8. Check the level of the engine-oil level, and close and latch the hood.

   Note: The engine ships with oil in the crankcase; however, check the oil level before and after the engine is first started.

Product Overview

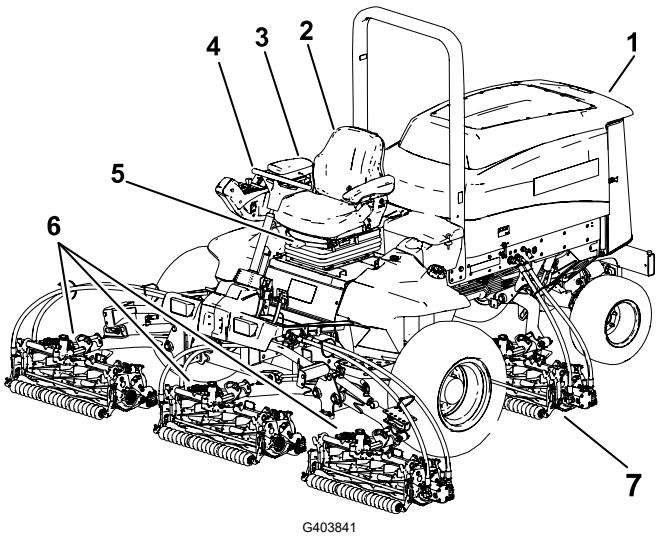

G403841

1. Engine hood
2. Operator's seat
3. Control arm
4. Steering wheel
5. Seat-adjustment lever
6. Front cutting units
7. Rear cutting units

Controls

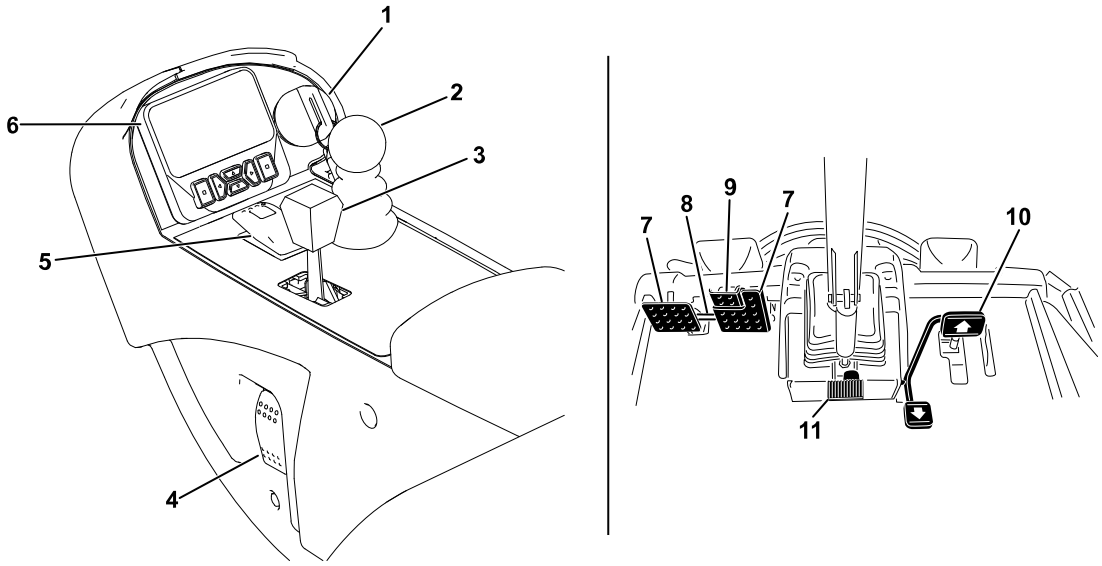

G467661

1. Key switch
2. Lower mow/raise control lever
3. Throttle-control lever
4. Headlight switch
5. PTO switch
6. InfoCenter
7. Brake pedal
8. Pedal-locking latch
9. Parking-brake pedal
10. Traction pedal
11. Tilt-steering pedal

Traction Pedal

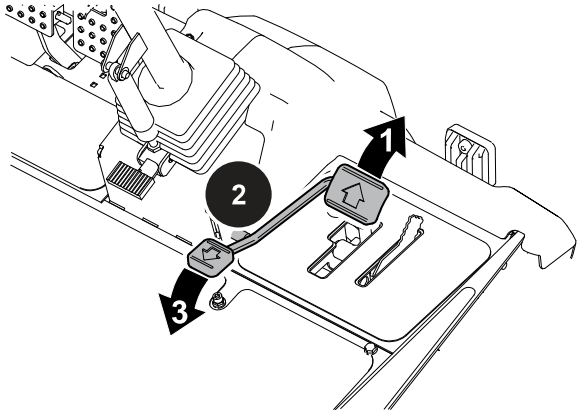

G468096

1 Move forward—press the top of the pedal.

Note: To achieve no load, maximum ground speed, fully press the top of the pedal while the throttle is in the FAST position.

2 Stop the machine—reduce foot pressure on the pedal and allow it to return to the center (neutral) position.

3 Move backward—press the bottom of the pedal.

Note: Ground speed depends on how far you press the pedal.

Tilt-Steering Pedal

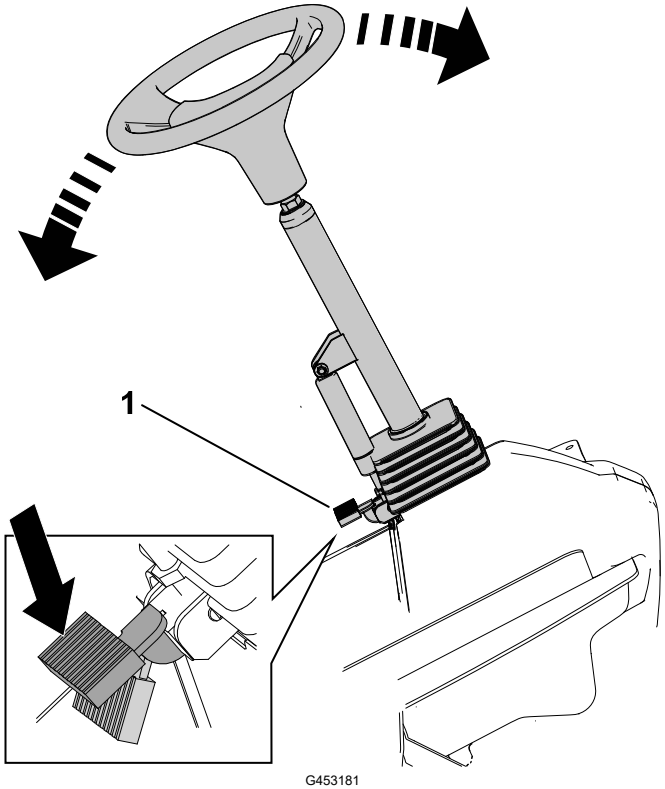

G453181

Press the tilt-steering pedal 1 and raise or lower the steering tower to a comfortable operating position.

Brake Pedals

The 2 foot pedals operate individual wheel brakes for turning assistance and to aid in obtaining better side hill traction.

Pedal-Locking Latch

The pedal-locking latch connects the pedals together to engage the parking brake.

Parking-Brake Pedal

To engage the parking brake, connect the pedals together with the pedal-locking latch, push down on the right brake pedal while engaging the toe pedal.

Note: When the parking brake is engaged, the parking brake symbol displays in the InfoCenter.

To release the parking brake, press 1 of the brake pedals until the parking-brake latch retracts.

Key Switch

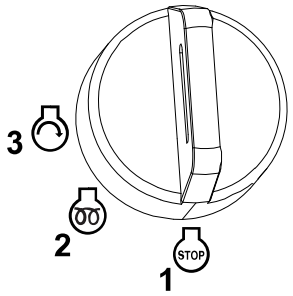

G453721

1. Off
2. On/preheat
3. Start

Headlight Switch

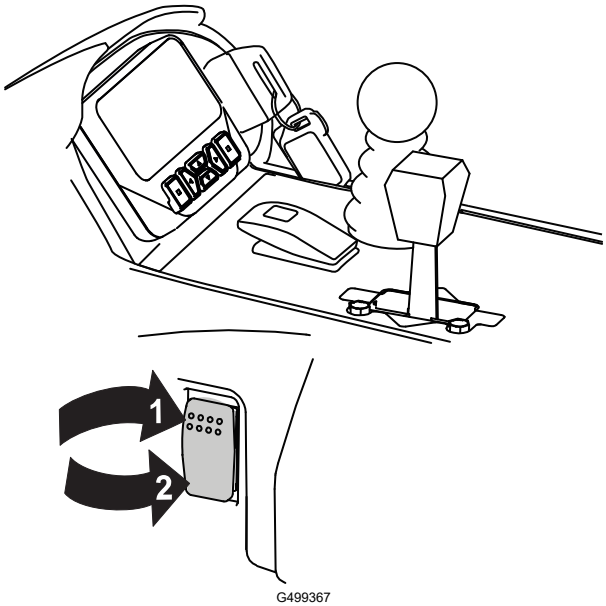

G499367

1. On
2. Off

Lower Mow/Raise Control Lever

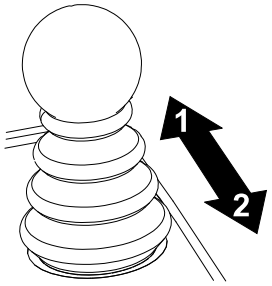

G453725

1. Lower the cutting units
2. Raise the cutting units

Note: The lever also starts and stops the reels when the reels are enabled in the mow mode.

The cutting units cannot be lowered when the mow/transport lever is in the transport position.

Throttle-Control Lever

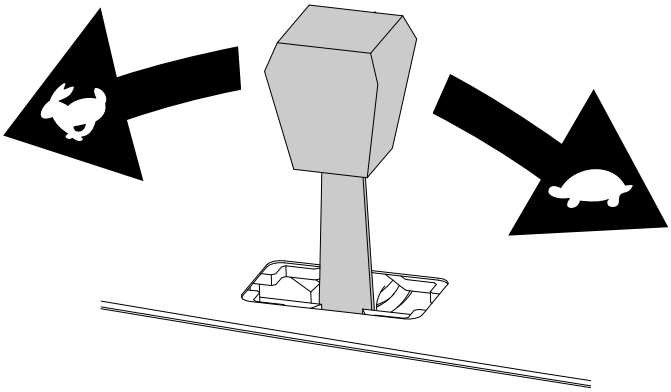

G447509

Move the throttle-control lever forward to increase the engine speed and rearward to decrease speed.

Mow-Speed Limiter

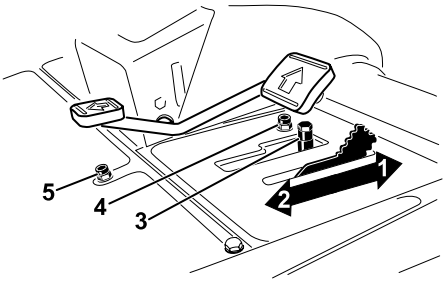

G467875

1. Rotate limiter forward—allows the cutting units to engage and limits the maximum ground speed during mowing.
2. Rotate limiter backward—to achieve maximum ground speed between job sites.
3. Spacers—change the position to adjust mowing ground speed.
4. Forward speed-limiter screw—adjust to limit the amount the traction pedal can be pressed in the forward direction.
5. Reverse speed-limiter screw—adjust to limit the amount the traction pedal can be pressed in the reverse direction.

IMPORTANT

The speed-limiter screws must stop the traction pedal before the pump reaches full stroke; otherwise, damage to the pump may occur.

Power Point

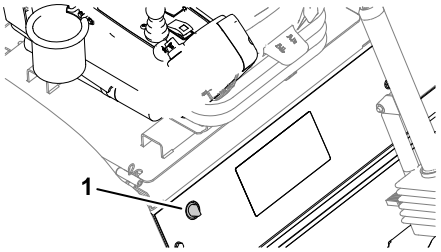

G467886

The power point 1 is a 12 V power supply for electronic devices.

Bag Holder

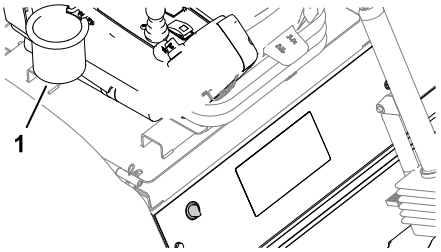

G467887

Use the bag holder 1 for storage.

InfoCenter Display

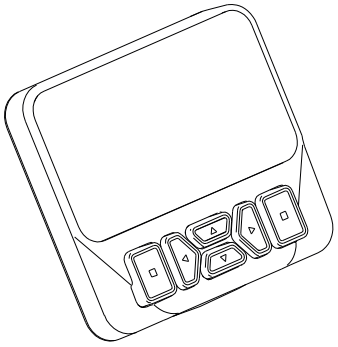
G461392

The InfoCenter display shows information about your machine, such as the operating status, various diagnostics, and other information about the machine.

The screens that display, depend on which buttons you select. The purpose of each button may change depending on what is required at the time.

Backlap Levers

Use the backlap levers to control the cutting unit rotation direction when backlapping the reels.

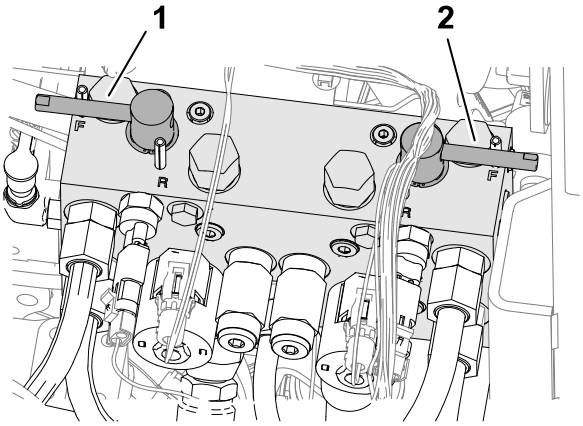

G468066

1. Front cutting-unit backlap lever
2. Rear cutting-unit backlap lever

Power-Takeoff (PTO) Switch

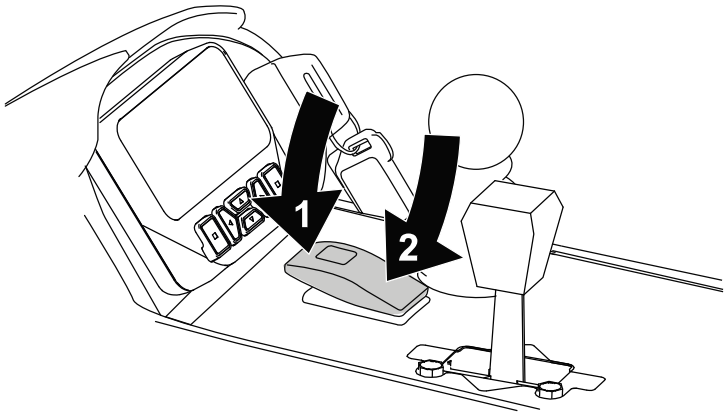

G499379

1. Engage the PTO
2. Disengage the PTO

Fuel Gauge

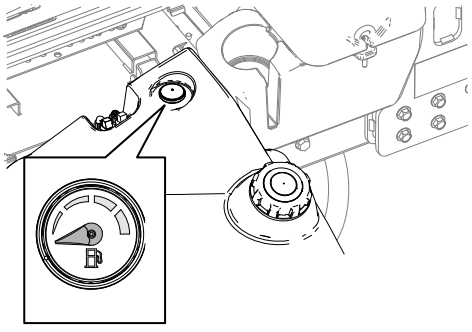

G468098

Seat Controls

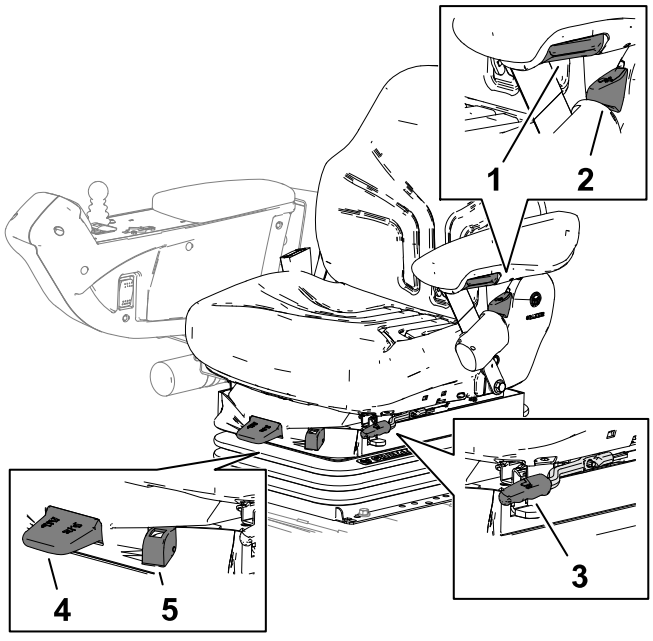

G423842

1. Armrest adjusting knob
2. Seat back adjusting lever
3. Fore and aft adjusting lever
4. Weight adjusting lever
5. Weight gauge

Armrest Adjustment Knob

Rotate the knob to adjust the seat armrest angle.

Back Adjustment Lever

Move the lever to adjust the seat back angle.

Forward/Backward Lever

Pull out on the lever to slide the seat forward or backward.

Weight-Adjustment Lever

Adjust the seat to your weight. Pull up on the lever to increase the air pressure and push down to decrease the air pressure. The proper adjustment is attained when the weight gauge is in the green region.

Weight Gauge

The weight gauge indicates when the seat is adjusted to the weight of the operator. Height adjustment is made by positioning the suspension within the range of the green region.

Specifications

Note: Specifications and design are subject to change without notice.

Width of cut, 27-inch cutting units	307 cm (121 inches)
Width of cut, 32-inch cutting units	320 cm (126 inches)
Overall width, 27-inch cutting units down	345 cm (136 inches)
Overall width, 32-inch cutting units down	358 cm (141 inches)
Overall width, cutting units up (transport)	239 cm (94 inches)
Overall length	370 cm (146 inches)
Height with ROPS	220 cm (87 inches)
Track width, front	229 cm (90 inches)
Track width, rear	141 cm (55.5 inches)
Wheelbase	171 cm (67.5 inches)
Net weight (with no cutting units and no fluids)	1574 kg (3,470 lb)
Fuel tank capacity	83 L (22 US gallons)

Attachments/Accessories

A selection of Toro approved attachments and accessories is available for use with the machine to enhance and expand its capabilities. Contact your Authorized Service Dealer or authorized Toro distributor or go to www.Toro.com for a list of all approved attachments and accessories.

To ensure optimum performance and continued safety certification of the machine, use only genuine Toro replacement parts and accessories.

Before Operation

Performing Daily Maintenance

Before starting the machine each day, perform the Each Use/Daily procedures listed in the Maintenance Schedule.

Fuel

Fuel Specifications

IMPORTANT

Never use kerosene or gasoline instead of diesel fuel.

Petroleum Diesel

Type	Use summer grade diesel fuel (No. 2-D) at temperatures above -7°C (20°F) and winter grade (No. 1-D or No. 1-D/2-D blend) below that temperature. Use of winter grade fuel at lower temperatures provides lower flash point and cold flow characteristics which eases starting and reduces fuel filter plugging. Use of summer grade fuel above -7°C (20°F) contributes toward longer fuel pump life and increased power compared to winter grade fuel.
Sulfur content	Low (<500 ppm) or ultra low (<15 ppm)
Minimum Cetane Rating	40
Storage	Acquire only enough clean, fresh diesel fuel or biodiesel fuel that you will consume within 180 days. Do not use fuel that has been stored for more than 180 days.
Oil and additives	Do not add to the fuel

Fuel (continued)

Biodiesel

Type	This machine can also use a biodiesel-blended fuel of up to B20 (20% biodiesel, 80% petroleum diesel). The petroleum diesel portion should be low or ultra low sulfur. Use B5 (biodisel content of 5%) or lesser blends in cold weather
Minimum Cetane Rating	40
Biodiesel Precautions	Painted surfaces may be damaged by biodiesel blends. Monitor seals, hoses, gaskets in contact with fuel as they may degrade over time. Fuel filter plugging may be expected for a time after converting to biodiesel blended. For more information on biodiesel, contact your authorized Toro distributor.
Storage	Acquire only enough clean, fresh diesel fuel or biodiesel fuel that you will consume within 180 days. Do not use fuel that has been stored for more than 180 days.
Oil and additives	Do not add to the fuel

	Standard	**Location**
Biodiesel fuel must meet:	ASTM D6751	USA
	EN 14214	European Union
Blended fuel must meet:	ASTM D975	USA
	EN 590	European Union

Fuel (continued)

Adding Fuel

1. Park the machine on a level surface, lower the cutting units, shut off the engine, and remove the key.
2. Clean the area around the fuel-tank cap (1) and remove the cap.
3. Fill the tank until the level is to the bottom of the filler neck (2) with the specified fuel.
4. Install the fuel-tank cap tightly.

   Note: If possible, fill the fuel tank after each use. Filling the fuel tank minimizes condensation inside the tank.

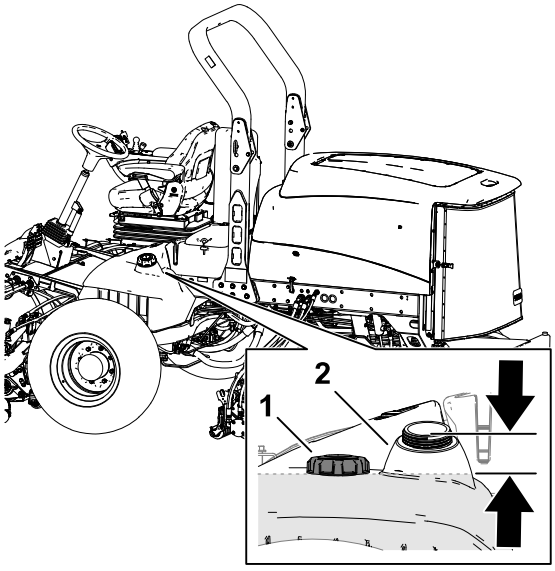

G423841

Checking the Interlock Switches

CAUTION

If safety interlock switches are disconnected or damaged, the machine could operate unexpectedly, resulting in minor or moderate injury.

- **Do not tamper with the interlock switches.**
- **Check the operation of the interlock switches daily and replace any damaged switches before operating the machine.**

IMPORTANT

If your machine fails any of the interlock switch checks, contact your authorized Toro distributor.

Preparing the Machine

1. Drive the machine slowly to an open area.
2. Lower the cutting units, shut off the engine, and engage the parking brake.

Checking the Traction Pedal Start-Interlock

1. Sit in the operator's seat and engage the parking brake.
2. Press the PTO switch to the DISENGAGE position.

Checking the Interlock Switches (continued)

3. Press the traction pedal and rotate the key to the START position.

Note: The engine should not start with the traction pedal pressed.

Checking the PTO-Start Interlock

1. Sit in the operator's seat.
2. Press the PTO switch to the ENGAGE position.
3. Rotate the key to the START position.

Note: The engine should not start with the PTO switch in the ENGAGE position.

Checking the PTO-Run Interlock

1. Sit in the operator's seat and press the PTO switch to the DISENGAGE position.
2. Start the engine and rise from the seat.
3. Press the PTO switch to the ENGAGE position.

   Note: The PTO should not run when you are out of the operator's seat.

Checking the Parking Brake and Traction Pedal Run-Interlock

1. Sit in the operator's seat and engage the parking brake.
2. Press the PTO switch to the DISENGAGE position.
3. Start the engine.
4. Press the traction pedal.

   Note: The engine should shut off when the parking brake is engaged and the traction pedal is pressed.

Overview of the InfoCenter Display

The InfoCenter display shows information about your machine such as the operating status, various diagnostics and other information about the machine. There are multiple screens on the display. You can switch between the screens, at any time, by pressing the back button and then using the up and down directional buttons.

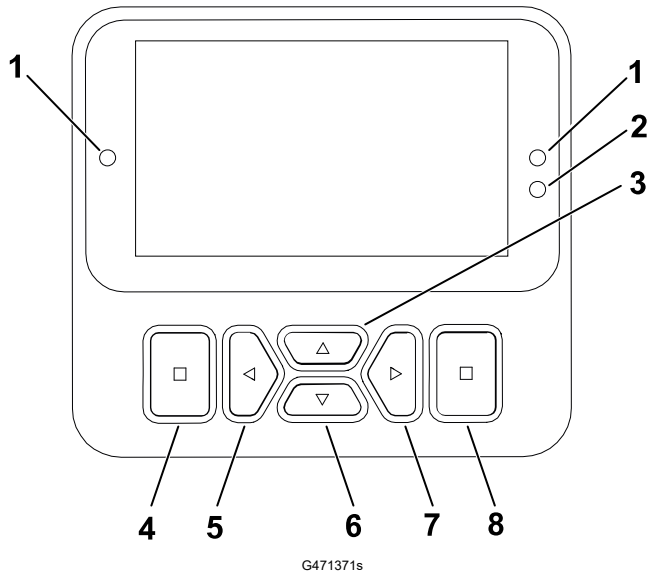

G471371s

1. Indicator light
2. Display brightness sensor
3. Navigation button —up
4. Back button
5. Navigation button —decrease/left
6. Navigation button —down
7. Navigation button —increase/right
8. Enter button

Note: The purpose of each button may change depending on what is required at the time. Each button is labeled with an icon displaying its current function.

InfoCenter Display Icons

	Service is due.
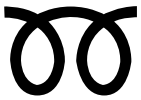	The glow plugs are active.
	Sit in the seat.
	The parking brake is engaged.
	Engine coolant temperature

	Warm-up mode
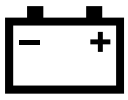	Battery voltage
	Locked
	Fault/warning
	Backlap

Overview of the InfoCenter Display (continued)

	Traction or Traction Pedal		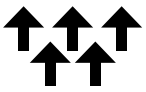	The cutting units are up or raising.
	Start the engine.		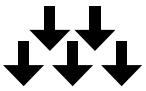	The cutting units are down or lowering.
	The PTO is engaged.			Generator
	Engine			Hour meter
PIN	The passcode has been entered.			Increase value
	Active			Decrease value
	Inactive			Scroll up/down
	Menu		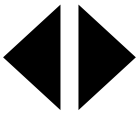	Scroll left/right
	Next screen			Previous screen

Overview of the Menus

To access the InfoCenter display menu system, press the back button while at the main screen. This brings you to the main menu. Refer to the following tables for a synopsis of the options available from the menus.

🔒 Protected under Protected Menus—accessible only by entering PIN

Main Menu

Menu Item	Description
Faults	The Faults menu contains a list of the recent machine faults. Refer to the *Service Manual* or contact your authorized Toro distributor for more information on the Faults menu and the information contained there.
Service	The Service menu contains information on the machine such as hours of use, counters, and other similar numbers.
Diagnostics	The Diagnostics menu displays the state of each machine switch, sensor, and control output. You can use this to troubleshoot certain

Overview of the InfoCenter Display (continued)

Main Menu (continued)

Menu Item	Description
	issues as it quickly tells you which machine controls are on and which are off.
Settings	The Settings menu allows you to customize and modify configuration variables on the display.
Machine Settings	The Machine Settings menu allows you to adjust the acceleration, speed, and counterbalance thresholds.
About	The About menu lists the model number, serial number, and software version of your machine.

Service

Menu Item	Description
Hours	Lists the total number of hours that the machine, engine and PTO have been on, as well as the number of hours the machine has been transported and service due.
Counts	Lists numerous counts the machine has experienced.

Diagnostics

Menu Item	Description
Joystick Raise	Indicates the inputs, qualifiers, and outputs for raising the cutting units.
Joystick Lower	Indicates the inputs, qualifiers, and outputs for lowering the cutting units.
Hi/Low Range	Indicates the inputs, qualifiers, and outputs for driving in transport mode.
PTO	Indicates the inputs, qualifiers, and outputs for enabling the PTO circuit.
Engine Run	Indicates the inputs, qualifiers, and outputs for starting the engine.
Backlap	Indicates the inputs, qualifiers, and outputs for operating the backlap function.

Overview of the InfoCenter Display (continued)

Settings

Menu Item	Description
Enter PIN	Allows a person (superintendent/mechanic) authorized by your company with the PIN code to access protected menus.
Edit PIN	Allows a person (superintendent / mechanic) authorized by your company with the PIN code to change the PIN.
Protect Settings 🔒	Allows the ability to change the settings in the protected settings
Reset Defaults	Resets the display to original factory settings.
Backlight	Controls the brightness of the LCD display.
Language	Controls the language used on the display*.
Font Size	Controls the size of the font on the display.
Units	Controls the units used on the display (Imperial or Metric).

*Only "operator-faced" text is translated. Faults, Service, and Diagnostics screens are "service-faced." Titles are in the selected language, but menu items are in English.

Machine Settings

Menu Item	Description
Front Backlap Reel Speed	Controls the speed of the front reels in backlap mode.
Rear Backlap Reel Speed	Controls the speed of the rear reels in backlap mode.
Auto Idle 🔒	Controls the amount of time allowed before returning the engine to low idle when the machine is stationary
Blade Count 🔒	Controls the number of blades on the reel for reel speed.
Height of cut (HOC) 🔒	Controls the height of cut (HOC) for determining the reel speed.
F Reel RPM 🔒	Displays the calculated reel speed position for the front reels. The reels can also be manually adjusted.
R Reel RPM 🔒	Displays the calculated reel speed position for the rear reels. The reels can also be manually adjusted.
Mow Speed 🔒	Controls the ground speed for determining the reel speed

Overview of the InfoCenter Display (continued)

About

Menu Item	Description
Model	Lists the model number of the machine.
SN	Lists the serial number of the machine.
Machine Controller Revision	Lists the software revision of the master controller.
Display Revision	Lists the software revision of the display.
CAN Bus	Lists the machine communication bus status.

Protected Menus

There are operating configuration settings that are adjustable within **Settings** of the display. To lock these settings, use the **Protected Menu**.

Note: At the time of delivery, the initial password code is programmed by your distributor.

Accessing Protected Menus

Note: The factory default PIN code for you machine is either `0000` or `1234`.

If you changed the PIN code and forgot the code, contact your authorized Toro distributor for assistance.

1. From the **Main Menu**, scroll down to **Settings** and press the select button.

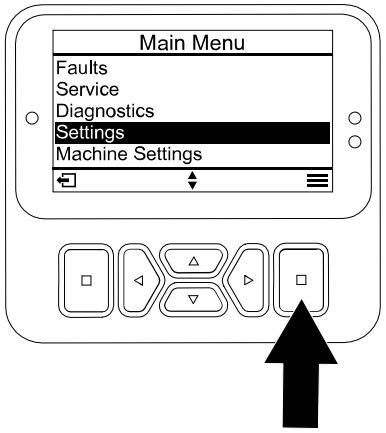

G471349s

2. In **Settings**, scroll to **Enter PIN** and press the select button Ⓐ.
3. To enter the PIN code, press the up/down navigation buttons Ⓑ until the correct first digit appears, then press the right navigation button Ⓒ to move on to the next digit. Repeat this step until the last digit is entered.
4. Press the select button Ⓓ.

   Note: If the display accepts the PIN code and the protected menu is unlocked, the word "PIN" displays in the upper right corner of the screen.
5. To lock the protected menu, rotate the key switch to the OFF position and then to the ON position.

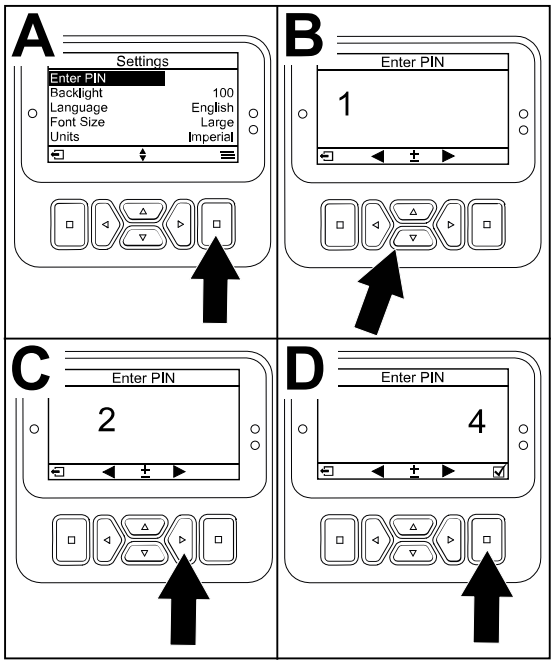

G471350s

Viewing and Changing the Protected Menu Settings

1. In **Settings**, scroll down to **Protect Settings**.
2. To view and change the settings without entering a PIN code, use the select button to change the **Protect Settings** to ☐ (Off).
3. To view and change the settings with a PIN code, use the select button to change the **Protect Settings** to ☑ (On), set the PIN code, and turn the key in the ignition switch to the OFF position and then to the ON position.

Setting the Service Due Timer

The service due timer resets the service due hours after a scheduled maintenance procedure is performed.

1. In **Settings**, scroll to **Enter PIN** and press the select button.
2. Enter PIN; refer to Accessing Protected Menus.
3. In **Service**, navigate to **Hours** and press the select button.
4. Scroll down to **Service Due**.

   Note: If service is currently due, Now appears next to **Service Due**.
5. Highlight the service interval and press the select button.

   Note: The service interval (250 Hrs, 500 Hrs, etc) is located next to **Service Due**.

   Service interval is a protected menu item.
6. When the RESET SERVICE TIMER? screen appears, press the select button for YES or the back button for NO.

Overview of the InfoCenter Display (continued)

7. After you select YES, the interval screen clears and reverts back to the service hours selections.

Setting the Auto Idle

1. In **Settings**, scroll down to **Auto Idle**.
2. Press the right navigation button to change the auto idle time between Off, 8S, 10S, 15S, 20S, and 30S.

Setting the Blade Count

1. In **Machine Settings**, scroll down to **Blade Count**.
2. Press the right navigation button to change the blade count between 8 or 11 blade reels.

Setting the Mow Speed

1. In **Settings**, scroll down to **Mow Speed** and press the select button.
2. Use the up and down navigation buttons to select the appropriate mow speed set on the mechanical mow-speed limiter on the traction pedal.

Setting the Height of Cut (HOC)

1. In **Machine Settings**, scroll down to **Height of Cut**.
2. Use the left and right navigation buttons to select the HOC setting that matches the bench setting of the cutting units. If the exact setting is not displayed, select the nearest HOC setting from the list displayed.

During Operation

Starting the Engine

IMPORTANT

Bleed the fuel system if any of the following situations have occurred:

- **The engine has shut off because the machine ran out of fuel.**
- **Maintenance was performed on the fuel system components.**

1. Sit in the operator's seat, engage the parking brake, and ensure that your foot is off the traction pedal.
2. Move the engine-throttle control to the SLOW position.
3. Turn the key to the RUN position.

Starting the Engine (continued)

The glow-plug indicator displays in the InfoCenter.

4. When the glow indicator shuts off, turn the key to the START position.

IMPORTANT

Do not run the starter motor more than 15 seconds at a time, or premature starter failure may result. If the engine fails to start after 15 seconds, turn the key to the OFF position, check the controls and procedures, wait 15 additional seconds, and repeat the starting procedure.

When the temperature is less than -7°C (20°F), the starter motor can be run for 30 seconds on then 60 seconds off for 2 attempts.

5. When the engine starts, release the key.
6. Adjust the engine speed.

Shutting Off the Engine

1. Park the machine on a level surface.
2. Press the PTO switch to the DISENGAGE position.
3. Move the engine-throttle control to the SLOW position.
4. Engage the parking brake.
5. Lower the cutting units.

IMPORTANT

Lowering the cutting units relieves the hydraulic load from the system, prevents wear on system parts, and prevents accidental lowering of the cutting units.

6. Rotate the key to OFF and remove the key.
7. Wait for all moving parts to stop.

Locking the Cutting-Unit Pivot

Cutting Grass on a Hill Side

Lock the cutting-unit pivots to prevent the cutting units from rotating downhill when cutting across the face of a hill.

Locking the Cutting-Unit Pivot (continued)

1. Secure the carrier frame ③ of the cutting unit to the pivot yoke ① with the snapper pin ②.
2. Repeat step 1 at the other cutting units.

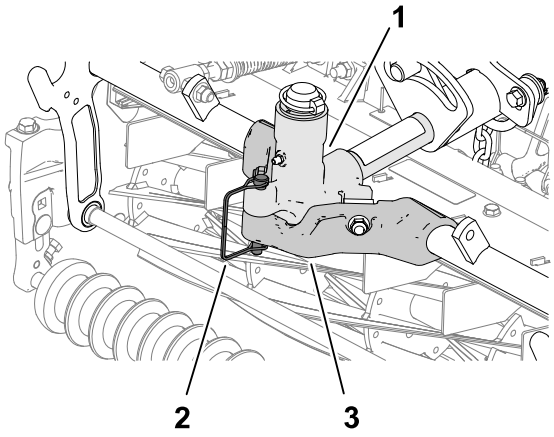

G423878

Adjusting the Turf-Compensation Spring

The turf-compensation spring transfers the weight from the front roller to the rear roller. This helps to reduce a wave pattern in the turf, also known as marcelling or bobbing.

IMPORTANT

Make spring adjustments with the cutting unit mounted to the traction unit, pointing straight ahead and lowered to the ground.

1. Make sure that the hairpin ② is installed in the rear hole in the spring rod ③.

   Note: When servicing the cutting unit, move the hairpin to the spring-rod hole next to the turf-compensation spring ①.

2. Tighten the hex nuts ④ on the front end of the spring rod until the compressed length of the spring is 15.9 cm (6.25 inches).

   Note: When operating on rough terrain decrease the spring length by 13 mm (1/2 inch). Ground following will be slightly decreased.

   Note: The turf compensation setting will need to be reset if the HOC setting or the Aggressiveness of Cut setting is changed.

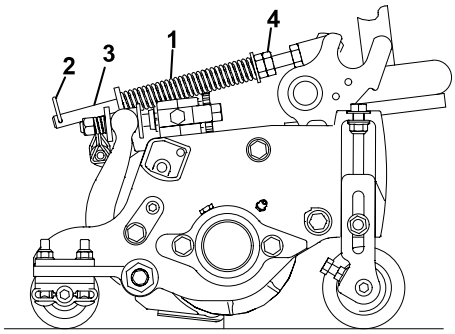

G402845

Cutting Grass with the Machine

1. Drive the machine to the mowing area and align the machine outside the cutting area for the first cutting pass.
2. Ensure that the PTO switch is set to the DISENGAGE position.

Cutting Grass with the Machine (continued)

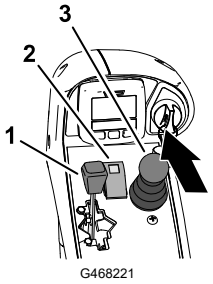

G468221

(1) Engine-throttle control

(2) PTO switch

(3) Mow/raise control lever

3. Use your foot to move the lever for the mow-speed limiter forward, to the MOW position.

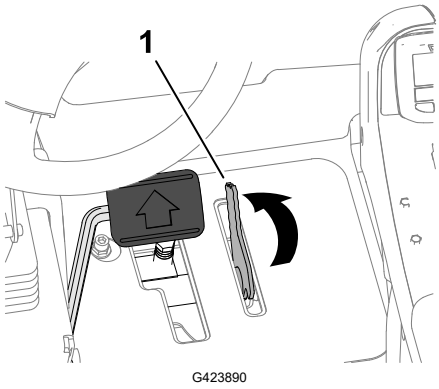

G423890

(1) Mow-speed limiter

4. Move the engine-throttle control to the FAST position.
5. Press the PTO switch to the ENGAGE position.
6. Begin driving the machine into the cutting area and move the lower mow/raise control lever forward.

   Note: The cutting units start running as they lower. The front cutting units are timed to lower before the rear cutting units.
7. When you complete the mowing pass, move the lever for the mow-speed limiter backward to lift the cutting units.
8. Perform a tear-shaped turn to quickly line up for your next pass.

Driving the Machine in Transport Mode

1. Press the PTO switch to the DISENGAGE position.
2. Move the lower mow/raise control lever backward to raise the cutting units (transport position).

Driving the Machine in Transport Mode (continued)

3. Move the lever for the mow-speed limiter (1) backward to the TRANSPORT position.
4. Press the traction pedal to drive the machine.

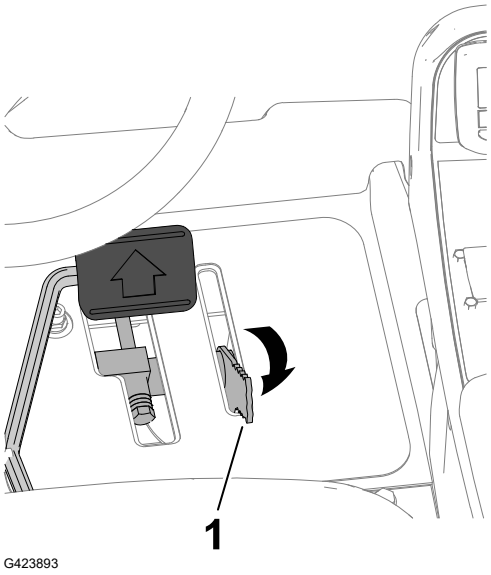

IMPORTANT

Be careful when driving between objects so that you do not accidentally damage the machine or cutting units. Use extra care when operating the machine on slopes. Drive slowly and avoid sharp turns on slopes to prevent a rollover.

Adjusting the Cutting-Unit Counterbalance

Rear Cutting Units

CAUTION

The springs are under tension, and adjusting them could result in minor or moderate personal injury.

Use caution when adjusting the springs.

Adjust the amount of counterbalance force applied to the rear cutting-units to help compensate for different turf conditions, and to maintain a uniform height of cut in rough conditions or in areas of thatch buildup.

Adjust the counterbalance force of each torsion spring to 1 of 4 settings. Each increment increases or decreases the counterbalance force on the cutting unit by 2.3 kg (5 lb).

Note: To remove all counterbalance force, position the long leg of the torsion spring below the bolt, washer, spacer, and locknut.

1. Park the machine on a level surface, lower the cutting units, engage the parking brake, shut off the engine, and remove the key.

Adjusting the Cutting-Unit Counterbalance (continued)

2. Insert a tube or similar object over the long leg of the spring, and lift the spring leg to relieve pressure on the spacer.

   Note: Have another person help by lifting and lowering the spring leg.

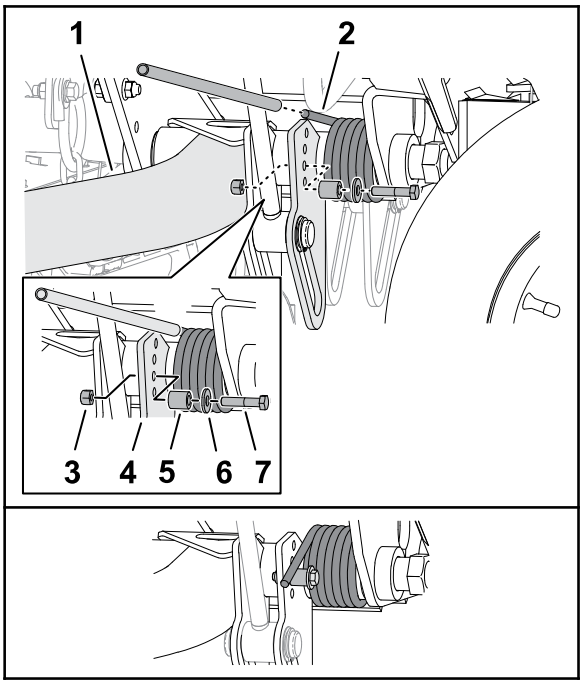

G424029

1. Lift arm (rear—cutting unit #2 or #3)
2. Torsion spring
3. Locknut
4. Lift-arm plate
5. Spacer
6. Washer
7. Bolt

3. While holding the spring, remove the bolt, washer, and locknut from the lift plate.
4. Align the spring leg above the desired hole location.
5. Install the bolt, washer, spacer, and locknut at the hole location.
6. Slowly lower the spring leg onto the spacer.
7. Repeat steps 2 through 6 at the rear cutting-unit-lift arm.

Adjusting the Cutting Unit-Turnaround Height

The lift-arm switch [1] is located behind the right, front lift arm (cutting unit #5).

1. Park the machine on a level surface, lower the cutting units, engage the parking brake, shut off the engine, and remove the key.
2. Loosen the 2 flange-head screws [3] that secure the switch bracket [2] to the carrier frame for the front cutting unit-lift arms.
3. Move the switch bracket as follows:
   - To increase the cutting unit-turnaround height, move the bracket up.
   - To decrease the cutting unit-turnaround height, move the bracket down.
4. Tighten the 2 flange-head screws.

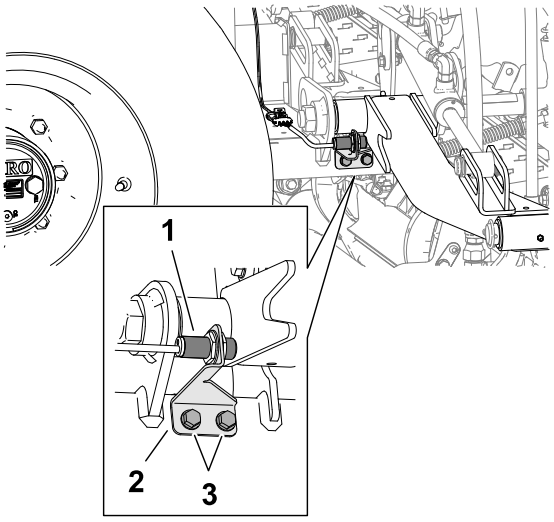

G424043

Folding the Roll Bar

- Keep all nuts, bolts, and screws correctly torqued ensure that the equipment is in safe working condition.
- Replace worn or damaged parts for safety.
- Ensure that the seat belt and mountings are in safe working order.
- Wear the seat belt when the roll bar is raised and no seat belt when the roll bar is lowered.

You can fold the roll bar down to allow access into areas with restricted height.

WARNING

The machine does not have a rollover protection system (ROPS) when the roll bar is folded down and should not be considered a ROPS.

Do not wear a seatbelt when the roll bar is lowered.

CAUTION

When lowering and raising the roll bar, your fingers may get pinched between the machine and the roll bar, which could result in minor or moderate injury.

Use caution when lowering and raising the roll bar.

Folding the Roll Bar (continued)

WARNING

The roll bar is an integral safety device. It does not protect you from injury or even death from a rollover unless it is secured in the raised position and you are wearing the seat belt.

- **Keep the roll bar in the raised position whenever you operate the machine.**
- **Lower the roll bar temporarily only when necessary, then secure it in the raised position as soon as possible before continuing operation.**

IMPORTANT

The roll bar is an integral safety device. Keep the roll bar in the raised position when operating the mower. Lower the roll bar temporarily only when absolutely necessary.

1. Park the machine on a level surface, lower the cutting units, engage the parking brake, shut off the engine, and remove the key.
2. Remove the lynch pins that secure the roll-bar pins at each side of the roll bar.

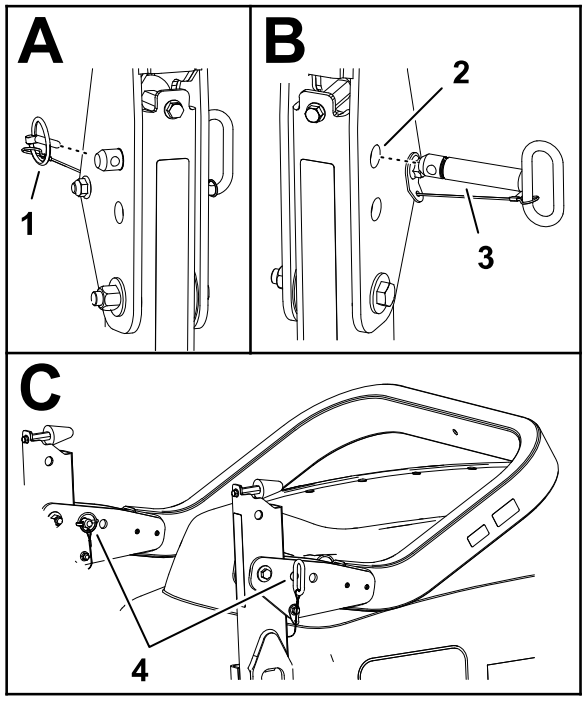

G424045

(1) Lynch pin
(2) Upper holes (pivot brackets)
(3) Roll-bar pin
(4) Roll-bar and lynch pins (lower holes—pivot brackets)

Folding the Roll Bar (continued)

3. Support the weight of the upper roll-bar tube while removing roll-bar pins from the pivot brackets.
4. Carefully lower the upper roll-bar tube until it rests on the stops.
5. Insert the roll-bar pins into the lower holes in the pivot brackets, and secure the roll-bar pins to the brackets with the lynch pins.

Raising the Roll Bar

WARNING

The ROPS protection system may not be effective if the roll-bar pins are loose, which, in a rollover, could result in death or serious injury.

When the roll bar is in the raised position, you must install both roll-bar pins and both lynch pins to ensure full ROPS protection.

---

1. Park the machine on a level surface, lower the cutting units, engage the parking brake, shut off the engine, and remove the key.
2. Remove the lynch pins (2) that secure the roll-bar pins (1) at each side of the roll bar.
3. Removing roll-bar pins from the pivot brackets (3).
4. Carefully lift the upper roll-bar tube until the holes in the pivot bracket align with the holes in the lower roll-bar tube.
5. Insert the roll-bar pins into the holes in the pivot bracket and lower roll-bar tube.
6. Secure the roll-bar pins to the brackets and lower roll-bar tubes with the lynch pins.

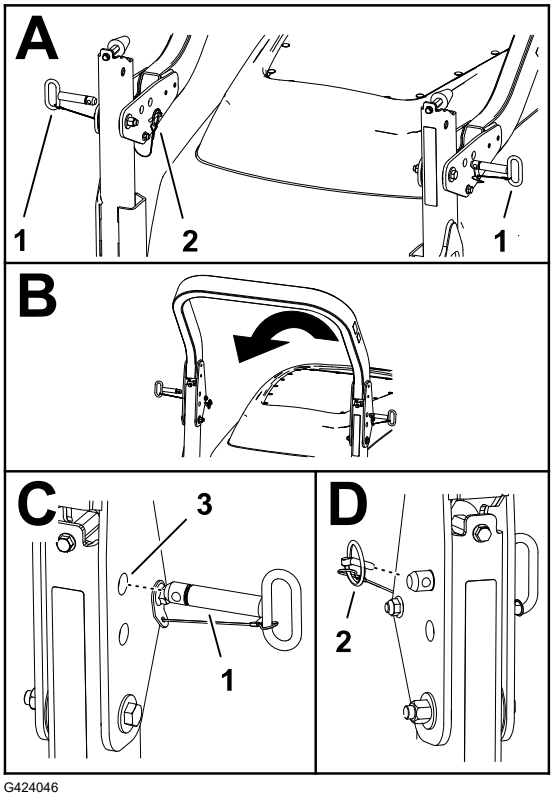

G424046

Operating Tips

Becoming Familiar with the Machine

- Before mowing grass, practice operating the machine in an open area.
- Start and shut off the engine.
- Operate in forward and reverse.
- Lower and raise the cutting units and engage and disengage the cutting units.
- When you become more familiar with the machine, practice operating up and down slopes at different speeds.

Overview of the Warning System

If the InfoCenter displays an operator advisory or a fault code during operation, stop the machine immediately and correct the problem before continuing operation. Serious damage could occur if you operate the machine with a malfunction.

After Operation

Pushing or Towing the Machine

WARNING

While the tow bypass valve is open, the machine could unintentionally move, resulting in death or serious injury.

When you are not pushing or towing the machine, engage the parking brake.

In an emergency, you can move the machine by opening tow bypass valve of the traction hydraulic pump, installing a hydraulic hose to bypass the check valve, and then pushing or towing the machine.

If you need to push or tow your machine, you may need to move it both forward and in reverse. To ensure that the drive system does not become damaged from pushing or towing, it is best to prepare the machine for both forward and reverse pushing or towing.

Preparing the Machine to Push or Tow in Reverse

Install the Reverse Tow Kit

Required Parts (purchased separately): Reverse Tow Kit, Toro Part No. 136-3620

IMPORTANT

If you need to push or tow the machine in reverse, you must first bypass the check valve in the 4-wheel-drive manifold.

1. Park the machine on a level surface, engage the parking brake, lower the cutting units, shut off the engine and remove the key.
2. Loosely assemble the bypass hose and straight fittings of the reverse tow kit; refer to the *Reverse Tow Kit Installation Instructions*.
3. Remove the dust cap and the test fitting from the test port of the reverse traction tube.
4. Assemble the straight fitting of the bypass hose to the test port, and tighten the fitting and hose.
5. Remove the #6 hex-socket plug from the unmarked port (located between the fittings in port M8 and port P2) of the rear-traction manifold.
6. Assemble the other straight fitting of the bypass hose into the unmarked rear-traction manifold port, and tighten the fitting and hose.
7. Open the tow-bypass valve (1) by rotating it 90° (1/4 turn) in either direction.

   Note: Note the position of the valve when opening and closing it.
8. Push or tow the machine.

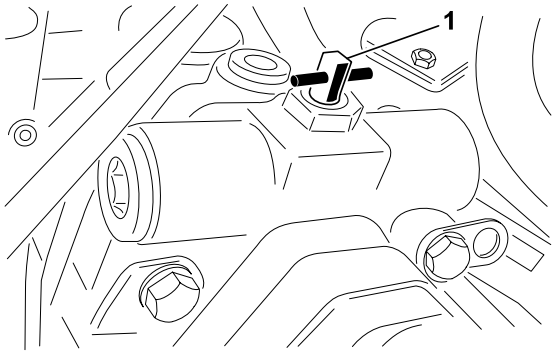

G424062

IMPORTANT

Do not push or tow the machine faster than 3 to 4.8 km/h (2 to 3 mph) or for more than 0.4 km (1/4 mile), because damage to the hydraulic system may occur. The bypass valve must be open whenever you push or tow the machine.

Preparing the Machine for Operation

Remove the Reverse Tow Kit

1. Park the machine on a level surface, engage the parking brake, lower the cutting units, shut off the engine and remove the key.
2. Remove the straight fitting and bypass hose of the reverse tow kit from the test port of the reverse traction tube; refer to the *Reverse Tow Kit Installation Instructions*.
3. Install the test fitting and dust cap to the test port.
4. Remove the other straight fitting of the bypass hose from the unmarked (located between the fittings in port M8 and port P2) rear-traction manifold port.
5. Install the new #6 hex-socket plug from the reverse tow kit into the unmarked port of the rear-traction manifold.
6. Close the tow-bypass valve (1) by rotating it back 90° (1/4 turn) before starting the engine.

   Note: Do not exceed **7 to 11 N·m (5 to 8 ft-lb)** torque to close the valve.

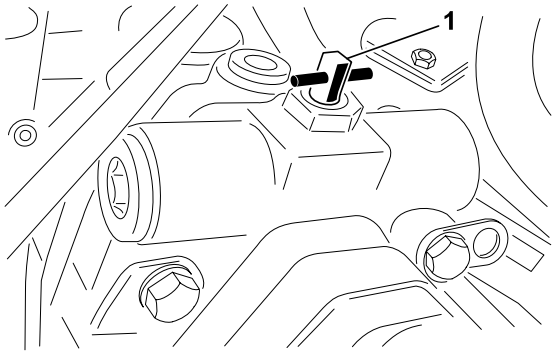

G424062

Pushing or Towing the Machine Forward

1. Open the hood and remove the center shroud.
2. Open the tow-bypass valve (1) by rotating it 90° (1/4 turn) in either direction.

   Note: Note the position of the valve when opening and closing it.

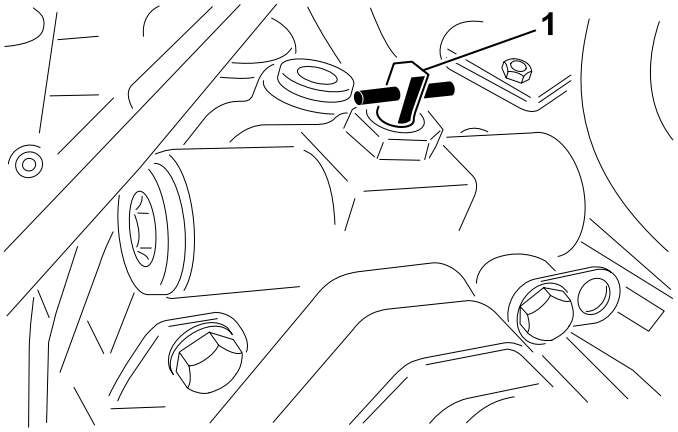

G424062

3. Push or tow the machine forward.

Pushing or Towing the Machine Forward (continued)

IMPORTANT

Do not push or tow the machine faster than 3 to 4.8 km/h (2 to 3 mph) or for more than 0.4 km (1/4 mile), because damage to the hydraulic system may occur. The bypass valve must be open whenever you push or tow the machine.

4. When the machine is ready for operation, close the tow-bypass valve by rotating it back 90° (1/4 turn) before starting the engine.

   Note: Do not exceed **7 to 11 N·m (5 to 8 ft-lb)** torque to close the valve.

Tie-Down Point Locations

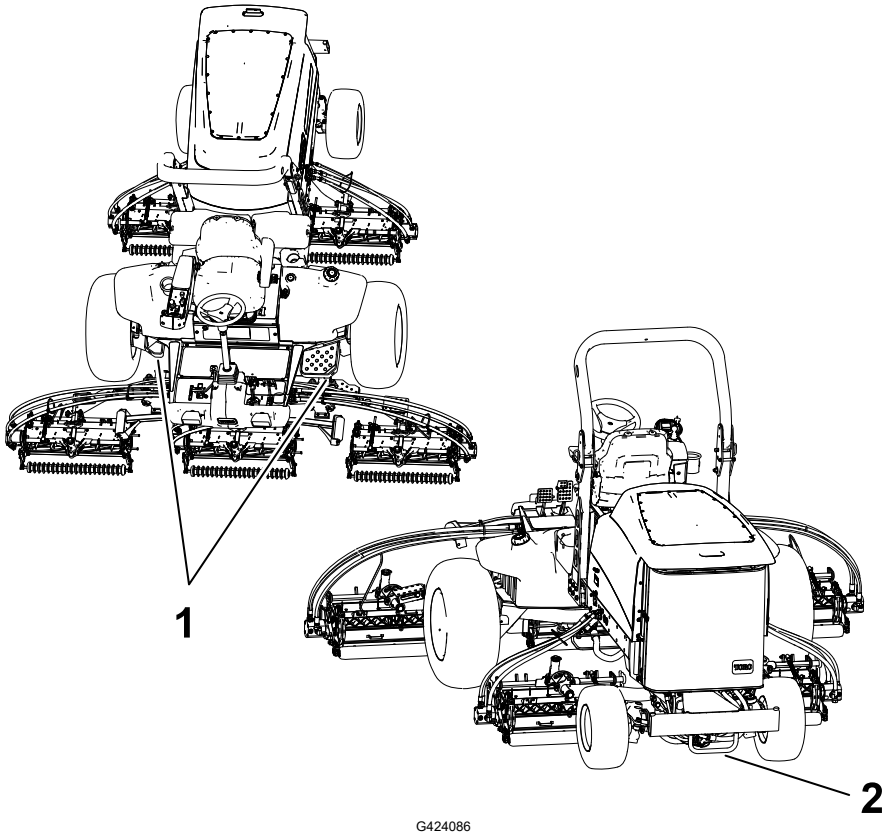

(1) Front tie-down points

(2) Rear tie-down point

Hauling the Machine

Follow the tips below when hauling the machine.

- Use full-width ramps for loading the machine onto a trailer or truck.
- Tie the machine down securely.

Note: Determine the left and right sides of the machine from the normal operating position.

Note: Download a free copy of the electrical or hydraulic schematic by visiting www.Toro.com and searching for your machine from the Manuals link on the home page.

IMPORTANT

Refer to your engine owner's manual and cutting unit *Operator's Manual* for additional maintenance procedures.

Recommended Maintenance Schedule

Maintenance Service Interval	Maintenance Procedure	Part No.	Qty	Description
After the first 8 hours	Torque the wheel nuts.	-	-	-
After the first 50 hours	Change the front planetary-gear oil.	-	-	-
After the first 200 hours	Change the oil in the rear axle.	-	-	-
Before each use or daily	Inspect the seat belt(s).	-	-	-
	Check the interlock switches.	-	-	-
	Check the air filter.	108-3814	1	Outer air filter
		108-3816	1	Inner air filter
	Check the engine-oil level, add engine oil as needed.	121-6393	1	10W-30 Premium Engine Oil (5 gallons)
		121-6392	1	10W-30 Premium Engine Oil (55 gallons)
		121-6395	1	15W-40 Premium Engine Oil (5 gallons)
		121-6394	1	15W-40 Premium Engine Oil (55 gallons)
	Drain the water separator.	-	-	-
	Check the tire pressure.	-	-	-
	Visually inspect the rear axle for leaks.	-	-	-

Maintenance Service Interval	Maintenance Procedure	Part No.	Qty	Description
	Visually inspect the reduction-gear case for leaks.	-	-	-
	Check the coolant level.	-	-	-
	Service the engine cooling system (more frequently in extremely dirty or dusty conditions).	-	-	-
	Inspect the hydraulic lines and hoses.	-	-	-
	Check the level of the hydraulic fluid.	-	-	-
Every 50 hours	Grease the bearings and bushings (and immediately after every washing).	108-1190	1	Premium all-purpose grease (14 oz)
	Clean the battery and check the condition of it.	-	-	-
Every 100 hours	Check the condition and tension of the alternator belt.	120-5824	1	Alternator belt
Every 200 hours	Torque the wheel nuts.	-	-	-
Every 400 hours	Service the air cleaner (more frequently in extremely dirty or dusty conditions). Service the air cleaner earlier if the air-cleaner indicator shows red.	108-3814	1	Outer air filter
		108-3816	1	Inner air filter
	Inspect the fuel lines and connections.	-	-	-
	Replace the fuel/water separator filter.	110-9049	1	Fuel system water filter
	Check for end-play in the planetary drives.	-	-	-
	Check the planetary-gear-drive oil level (check if you notice external leakage).	-	-	-
	Check the oil level of the rear axle (and before you start the engine for the first time).	-	-	-
	Check the lubricant in the reduction-gear case (and before you start the engine for the first time).	-	-	-
Every 800 hours	Drain and clean the fuel tank.	-	-	-
	Change the front planetary-gear oil, or yearly, whichever comes first.	-	-	-

Maintenance Service Interval	Maintenance Procedure	Part No.	Qty	Description
	Change the oil in the rear axle.	-	-	-
	Check the rear-wheel alignment.	-	-	-
	If you are not using the recommended hydraulic fluid or have ever filled the reservoir with an alternative fluid, replace the hydraulic filters.	75-1310	1	Hydraulic filter
		94-2621	1	Hydraulic filter
	If you are not using the recommended hydraulic fluid or have ever filled the reservoir with an alternative fluid, change the hydraulic fluid.	133-8086	1	PX Extended Life Hydraulic Fluid (5 gallons)
		133-8087	1	PX Extended Life Hydraulic Fluid (5 gallons)
Every 1,000 hours	If you are using the recommended hydraulic fluid, replace the hydraulic filters.	75-1310	1	Hydraulic filter
		94-2621	1	Hydraulic filter
Every 2,000 hours	If you are using the recommended hydraulic fluid, change the hydraulic fluid.	133-8086	1	PX Extended Life Hydraulic Fluid (5 gallons)
		133-8087	1	PX Extended Life Hydraulic Fluid (55 gallons)
Before storage	Drain and clean the fuel tank.	-	-	-
Every 2 years	Flush and replace the cooling system fluid (take the machine to an Authorized Service Dealer or Distributor or refer to the Service Manual).	-	-	-
	Replace the hydraulic hoses (take the machine to an Authorized Service Dealer or Distributor or refer to the Service Manual).	-	-	-
	Replace the coolant hoses (take the machine to an Authorized Service Dealer or Distributor or refer to the Service Manual).	-	-	-

Daily Maintenance Checklist

Duplicate this page for routine use.

Maintenance Check Item	For the week of:						
	Mon.	Tues.	Wed.	Thurs.	Fri.	Sat.	Sun.
Check the safety interlock operation.							
Check the brake operation.							
Check the levels of the engine oil and fuel.							
Check the cooling-system fluid level.							
Drain the water/fuel separator.							
Check the air-filter service indicator.							
Check the radiator, oil cooler, and screen for debris.							
Check for unusual engine noises.[1]							
Check for unusal operating noises.							
Check the fluid level of the hydraulic system.							
Check the hydraulic hoses for damage.							
Check the fluid for leaks.							
Check the tire pressure.							
Check the instrument operation.							
Check the reel-to-bedknife adjustment.							
Check the height-of-cut adjustment.							
Lubricate all grease fittings.[2]							
Touch-up damaged paint.							

1. Check the glow plug and injector nozzles if the engine starts hard, produces excess smoke, or runs rough.
2. Immediately after every washing, regardless of the interval listed

IMPORTANT

Refer to your engine operator's manual for additional maintenance procedures.

Notation for Areas of Concern

Inspection performed by:		
Item	**Date**	**Information**
1		
2		

Notation for Areas of Concern (continued)

Inspection performed by:		
Item	**Date**	**Information**
3		
4		
5		

Pre-Maintenance Procedures

Preparing for Maintenance

1. Park the machine on a level surface, lower the cutting units, and engage the parking brake.
2. Shut off the engine, remove the key, and wait for all moving parts to stop.

Opening the Hood

Release the 2 hood latches (1) and rotate open the hood.

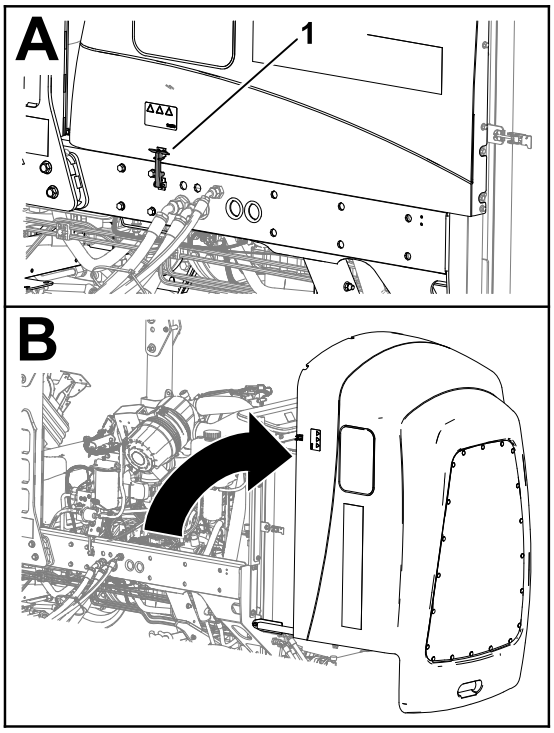

G424259

Closing the Hood

Carefully rotate the hood closed and secure it with the 2 hood latches ①.

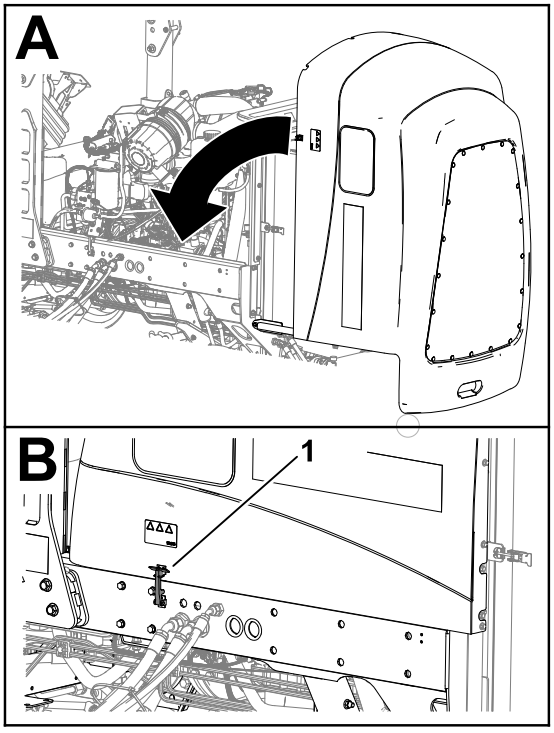

G424260

Accessing the Battery Compartment

Release the rubber latch ② from the battery-compartment cover ① and rotate the cover open.

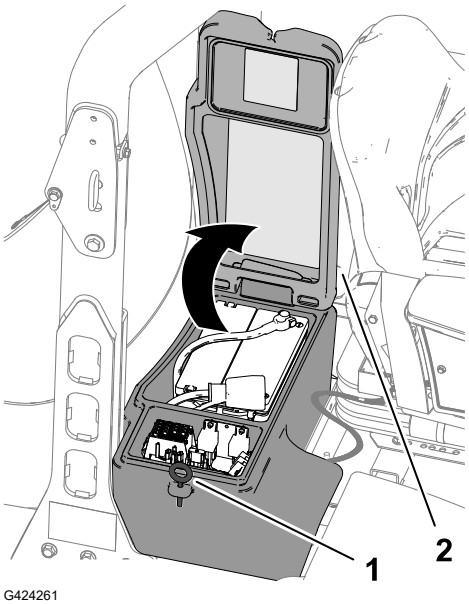

G424261

Tilting the Seat

1. Move the seat latch ① outward and carefully rotate the seat up.

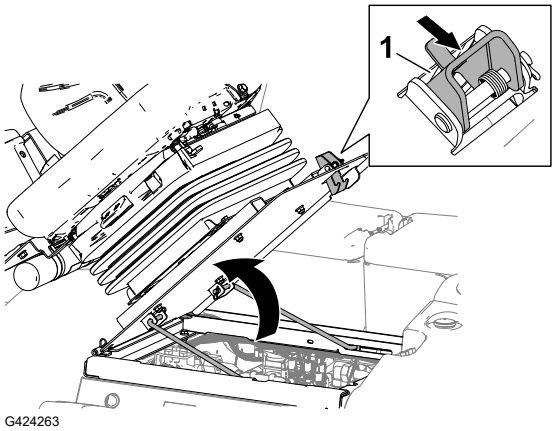

2. Ensure that the forward prop rod ② seats in the slot detent of the rod-guide plate ①.

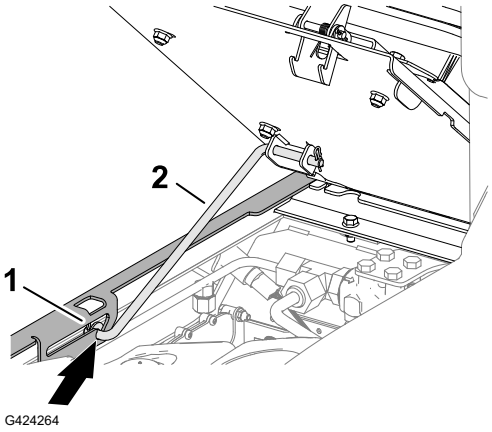

Lowering the Seat

1. Rotate the seat slightly, and lift the prop rod ② out of the detent of the seat support slot ①.
2. Carefully lower the seat until it latches securely.

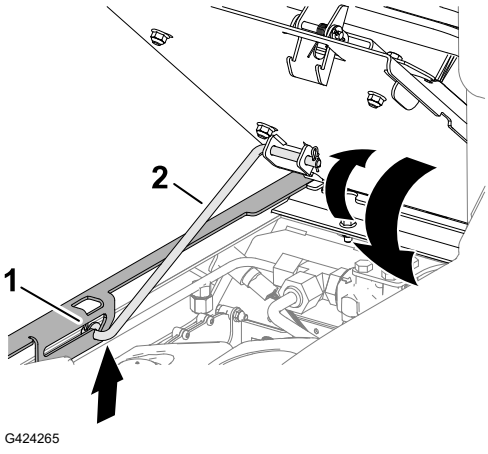

Jacking Point Locations

Note: Support the machine with jack stands whenever you work under the machine.

Use the following as machine-lift points:

- Front—the frame of the machine, forward of the wheel-drive motors.

IMPORTANT

Do not support the machine at the wheel-drive motors. Keep the lifting equipment clear of hydraulic tubing and hoses.

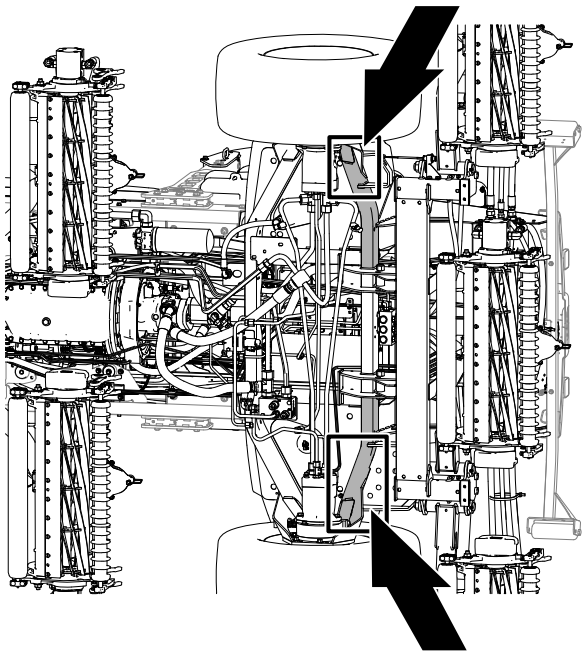

G424266

- Rear—the center of the axle.

  Note: Locate the jack stands of the specified capacity at both sides of the gear case and under the axle.

IMPORTANT

Do not support the machine at the tie rod.

Jacking Point Locations (continued)

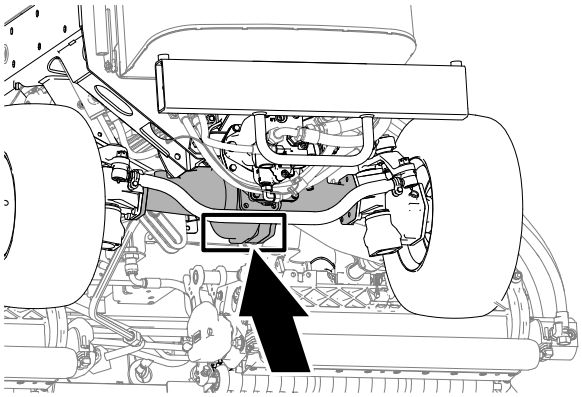

G424267

Lubrication

Greasing the Bearings and Bushings

The machine has grease fittings that must be lubricated regularly. Dusty and dirty operating conditions could cause dirt to get into the bearings and bushings, resulting in accelerated wear. Lubricate the grease fittings immediately after every washing, regardless of the interval specified.

1. Prepare the machine for maintenance.
2. Grease all machine fittings with No. 2 lithium grease.

Grease Fitting Locations

Grease Specification: No. 2 lithium grease

Brake shaft pivot bearings (5)	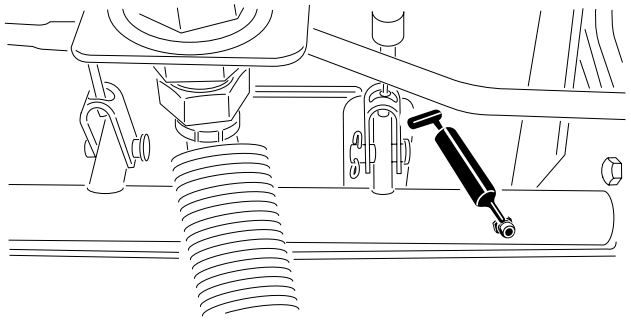 G452385
Rear axle-pivot bushing and steering cylinder	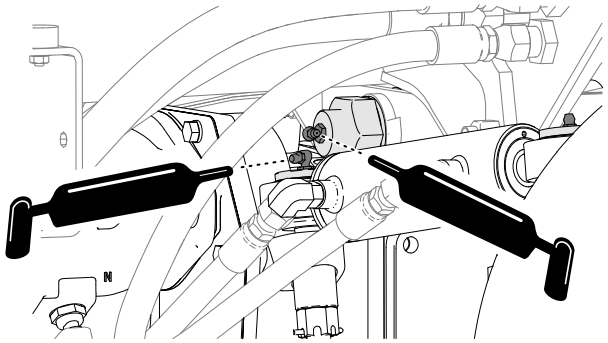 G452386

Greasing the Bearings and Bushings (continued)

Steering cylinder ball joints (2) Tie rod ball joints (2) King pin bushings (2) **Note:** The top fitting on the king pin should only be lubricated annually (2 pumps)	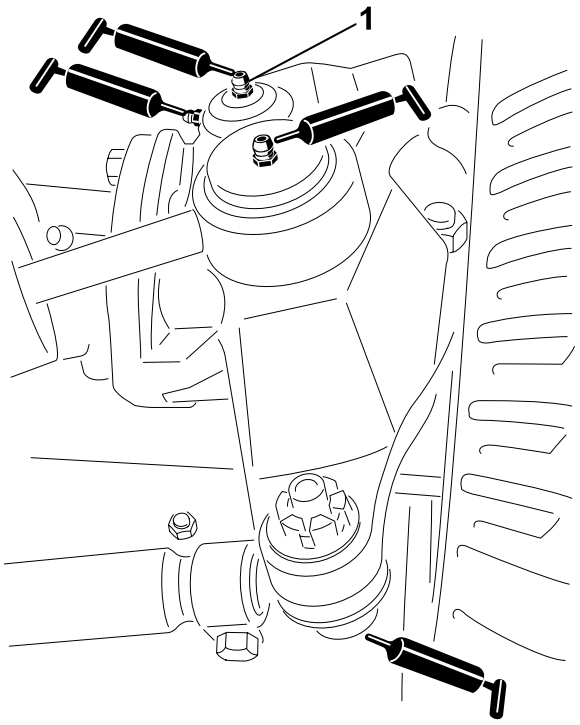 G452387 (1) Top fitting on king pin
Lift arm bushings (1 per cutting unit) Lift cylinder bushings (2 per cutting unit)	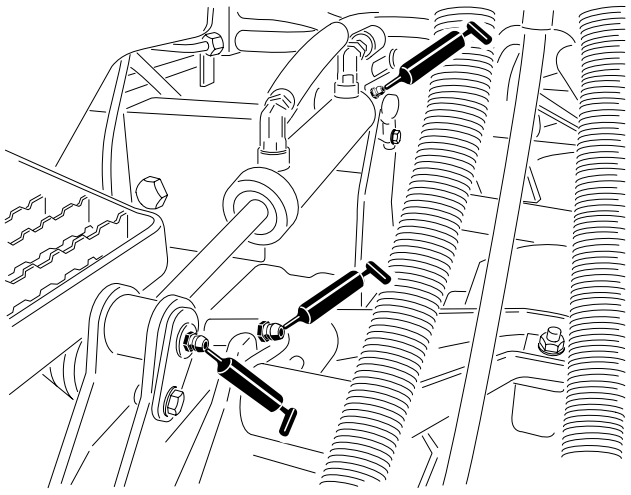 G452388

Greasing the Bearings and Bushings (continued)

Lift arm pivot bushings (1 per cutting unit) Cutting unit carrier frame (2 per cutting unit) Cutting unit lift arm pivot (1 per cutting unit)	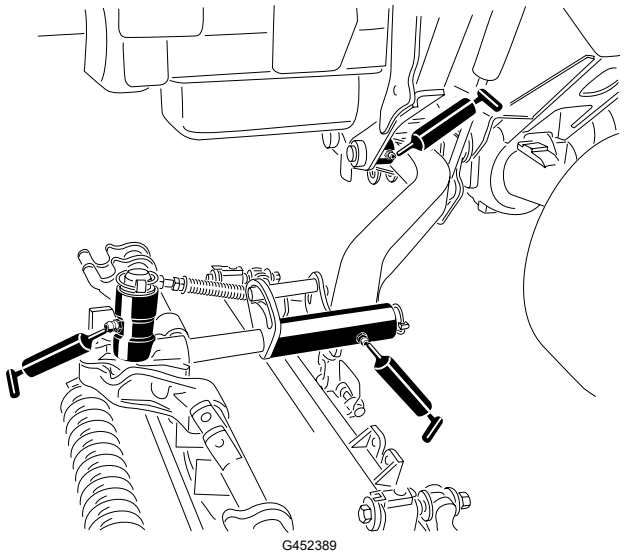

Engine Maintenance

Engine Oil Specifications

Oil Type

Use high-quality, low-ash engine oil that meets or exceeds API service category CH-4 or higher.

Use the following engine oil viscosity grade:

- Preferred oil: SAE 15W-40 [-17°C (above 0°F)]
- Alternate oil: SAE 10W-30 or 5W-30 (all temperatures)

Toro Premium Engine Oil is available from your authorized Toro distributor in either 15W-40 or 10W-30 viscosity grades.

Crankcase Capacity

Approximately 9.5 L (10.0 US qt) with the filter

Checking the Engine-Oil Level

Note: Check the oil when the engine is cool. If the engine is warm, wait 10 minutes before checking.

The engine is shipped with oil in the crankcase; however, check the oil level before and after you first start the engine.

Checking the Engine-Oil Level (continued)

If the oil level is below the lower limit mark on the dipstick, add oil gradually until the level reaches the upper limit mark on the dipstick.

IMPORTANT

Keep the engine-oil level between the upper and lower limits on the dipstick. Overfilling or underfilling the engine oil may cause severe engine damage.

1. Prepare the machine for maintenance.
2. Unlatch and open the hood.
3. Check the level of the engine oil.
4. Close and latch the hood.

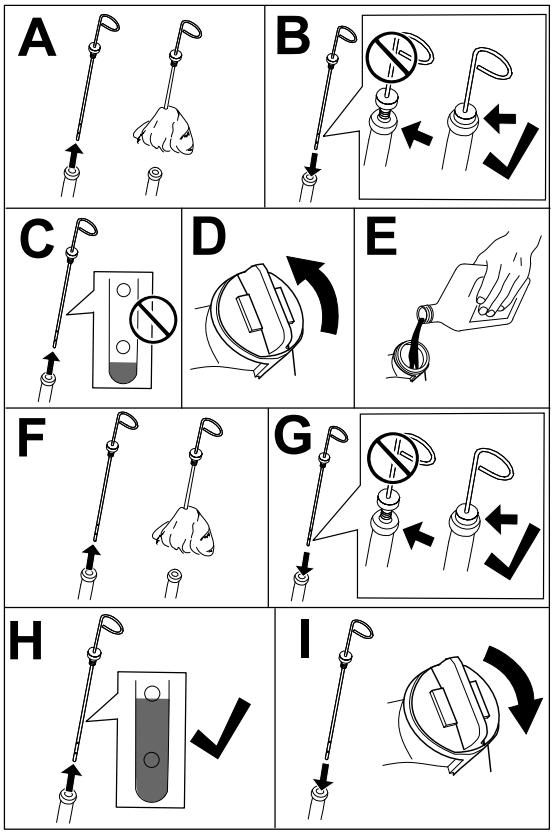

G453111

Changing the Engine Oil and Filter

Draining the Engine Oil

1. Prepare the machine for maintenance.
2. Remove the oil fill cap.
3. Align a drain pan under the drain plug (1).
4. Remove the drain plug and let the oil drain into the pan.



5. When oil stops draining from the engine, install the drain plug and torque it to **54 to 63 N·m (40 to 47 ft-lb)**.

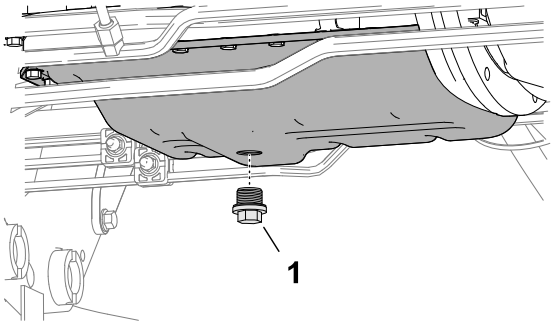

Changing the Engine Oil and Filter (continued)

Changing the Oil Filter

1. Rotate the oil filter (2) counterclockwise to remove it.
2. Wipe the filter adapter (1) clean.
3. Apply a light coat of clean oil to the seal of the new filter.
4. Thread the filter onto the filter adapter until the filter contacts the adapter, then tighten the filter an additional turn.

   Note: Do not overtighten the filter.

5. Add oil to the crankcase and install the filler cap.

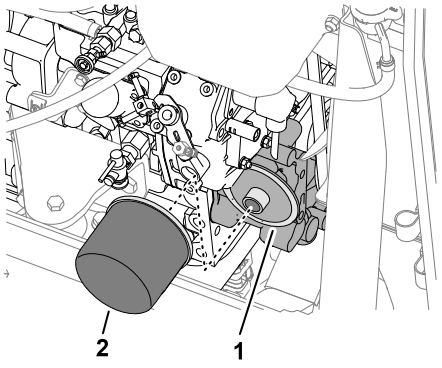

G468270

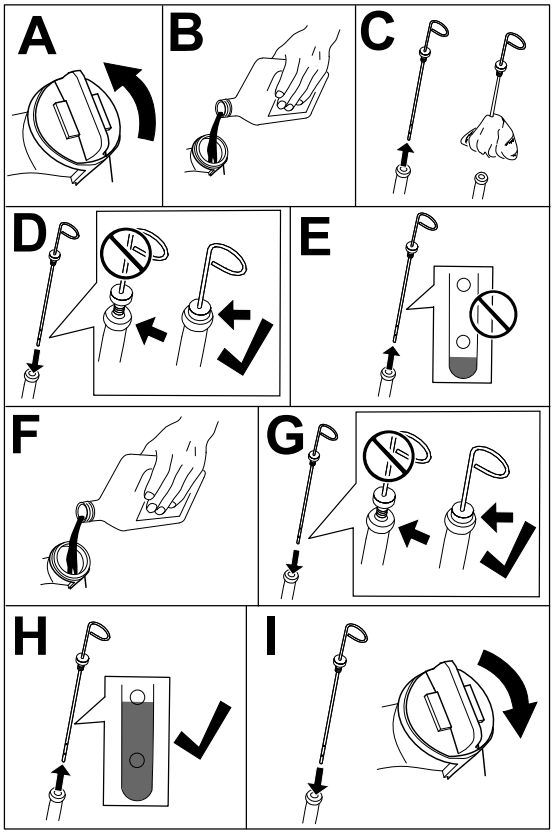

G453110

Servicing the Air Cleaner

Removing the Filter

Service the air-cleaner filter only when the service indicator displays a red band. Changing the air filter before it is necessary only increases the chance of dirt entering the engine when the filter is removed.

IMPORTANT

Make sure that the cover is seated correctly and seals with the air-cleaner body.

1. Prepare the machine for maintenance.
2. Open the hood.
3. Check the air-cleaner body for wear or damage which could cause an air leak. Check the whole intake system for leaks, damage, or loose hose clamps.

   Note: Replace a worn or damaged air cleaner and intake-system parts.
4. Pull the latch (1) outward, rotate the air-cleaner cover counterclockwise, and remove the cover.
5. Before removing the filter, use low-pressure air —275 kPa (40 psi), clean and dry—to help remove large accumulations of debris packed between outside of primary filter and the air-cleaner housing.

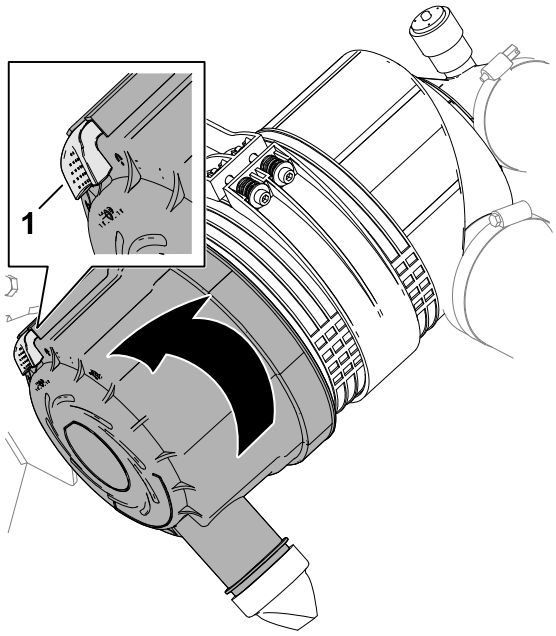

IMPORTANT

Avoid using high-pressure air, which could force dirt through the filter into the intake tract.

Servicing the Air Cleaner (continued)

6. Remove the primary filter ① from the air-cleaner housing ②.

   Note: Do not clean the primary filter.

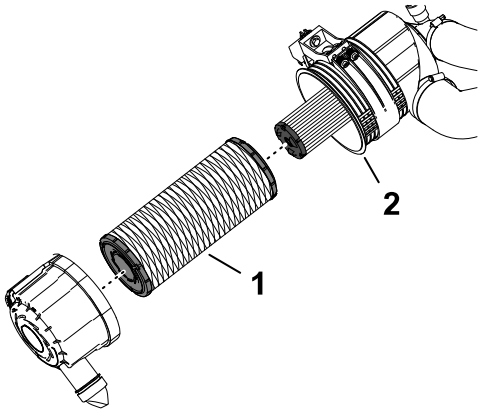

G424732

Installing the Filter

1. Check the safety-filter element ②. If it is dirty, replace it.

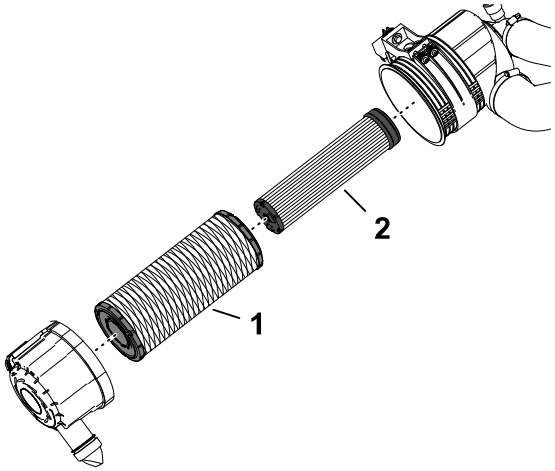

G424757

IMPORTANT

Never attempt to clean the safety filter. Replace the safety filter with a new one after every 3 primary filter services.

2. Inspect the new filter for shipping damage, checking the sealing end of the filter element and the body of the air filter.

IMPORTANT

Do not use a damaged filter element.

3. Assemble the primary-filter element ①. Apply pressure to the outer rim of the element to seat it in the air-filter housing.

Servicing the Air Cleaner (continued)

IMPORTANT

Do not apply pressure to the flexible center of the filter.

4. Remove the dust-ejector valve from the air-cleaner cover, clean the cavity, and install the ejector valve to the cover.
5. Assemble the cover onto the air-cleaner housing, aligning the dust-ejector valve in a downward position—between approximately 5 o'clock to 7 o'clock when viewed from the end.
6. If a red band displays in the service indicator, press the reset button at the end of the indicator.
7. Close and latch the hood.

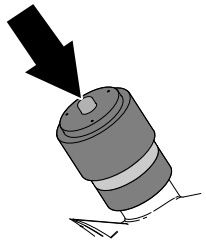

G424758

Fuel System Maintenance

Inspecting the Fuel Lines and Connections

1. Prepare the machine for maintenance.
2. Open the hood.
3. Inspect the fuel lines for wear, deterioration, damage, or loose fittings.

   Note: Repair or replace any worn or damaged fuel lines; tighten any loose fittings.
4. Close and latch the hood.

Draining the Fuel/Water Separator

1. Prepare the machine for maintenance.
2. Drain the water separator as shown.

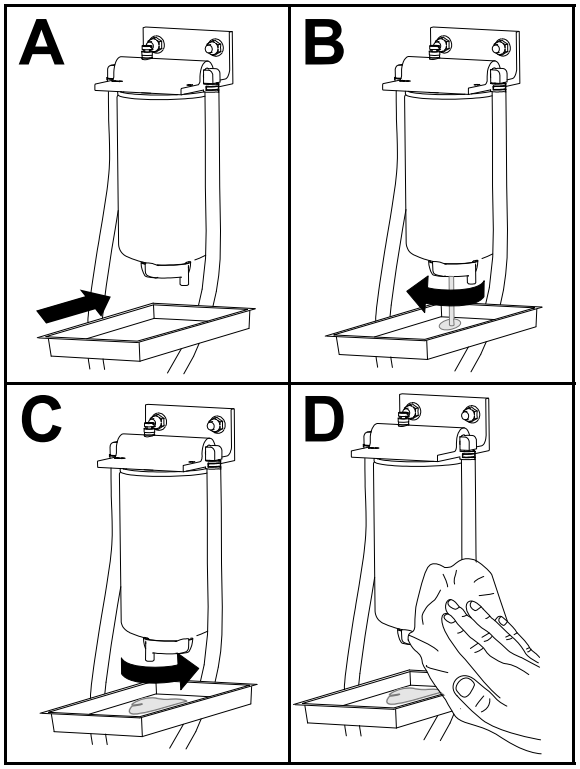

G452998

3. Start the engine, check for leaks, and shut off the engine.

   Note: Repair all fuel leaks.

Replacing the Water-Separator Filter

1. Fully drain the fuel-water separator.
2. Clean the filter head ① and filter canister ②.
3. Remove the filter canister, and clean the mounting surface of the filter head.
4. Lubricate the gasket on the filter canister with clean fuel.
5. Install the filter canister by hand until the gasket contacts the mounting surface, then rotate it an additional 1/2 turn.
6. Tighten the drain valve at the bottom of the filter canister.
7. Start the engine and check for leaks.

   Note: Repair all leaks.
8. Shut off the engine and remove the key.
9. Close and latch the hood.

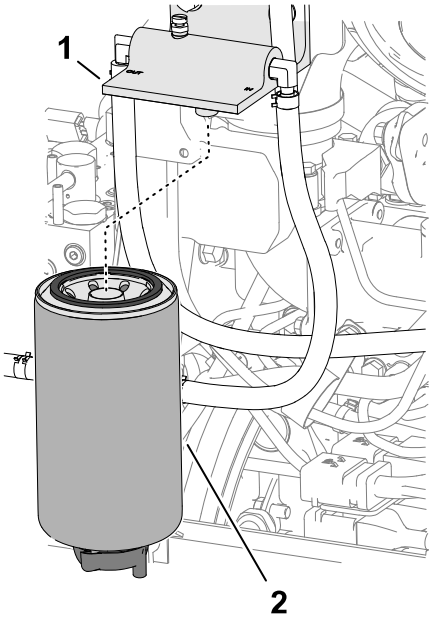

G425089

Draining and Cleaning the Fuel Tank

Drain and clean the fuel tank if the fuel system becomes contaminated or if the machine is to be stored for an extended period. Use clean fuel to flush out the tank.

1. Prepare the machine for maintenance.
2. Align a drain container under the drain valve ① at the bottom of the fuel tank.
3. Open the drain valve and allow the fuel to drain.
4. If needed, add clean fuel to the fuel tank to flush it out.
5. Close the drain valve.

   Note: When you add fuel to the tank, check the drain valve for leaks.

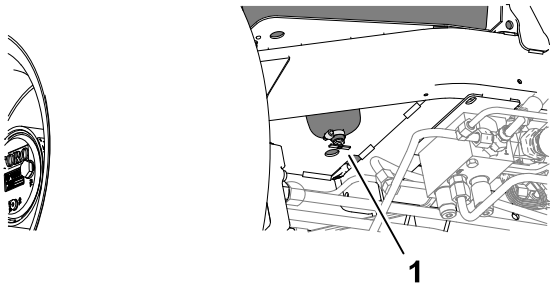

G425122

Cleaning the Fuel-Intake Screen

The fuel-intake tube, located inside the fuel tank, is equipped with a screen to help prevent debris from entering the fuel system. Remove the fuel-intake tube and clean the screen as required.

1. Prepare the machine for maintenance.
2. Tilt the seat.

Cleaning the Fuel-Intake Screen (continued)

3. Remove the clamp (3) that secures the hose (4) to the fuel pick-up tube.
4. Remove the fuel pick-up tube and rubber bushing (2) from the tank.
5. Clean the screen (1) at the end of the fuel pick-up tube.
6. Insert the fuel pick-up tube and rubber bushing into the tank until the bushing is seated into the tank.
7. Assemble the hose onto the fuel pick-up tube and secure it with the clamp.
8. Lower and latch the seat.

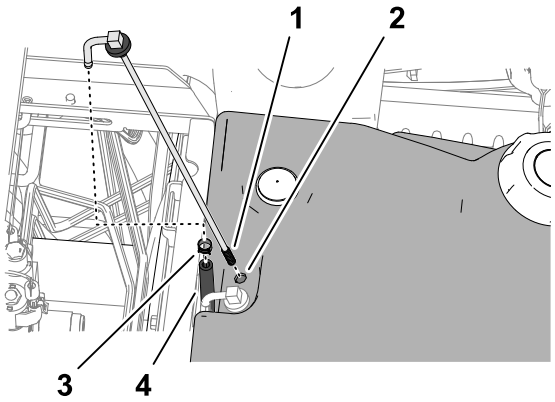

G425144

Electrical System Maintenance

Disconnecting the Battery

DANGER

Battery electrolyte contains sulfuric acid, which is fatal if consumed and causes severe burns.

- **Do not drink electrolyte and avoid contact with skin, eyes, or clothing.**
- **Wear safety glasses and rubber gloves.**
- **Fill the battery where clean water is always available for flushing the skin.**

---

1. Prepare the machine for maintenance.
2. Open the battery-compartment cover.
3. Disconnect the negative battery cable (2).
4. Slide the rubber boot off the positive battery-cable clamp, and disconnect the positive battery cable (1).

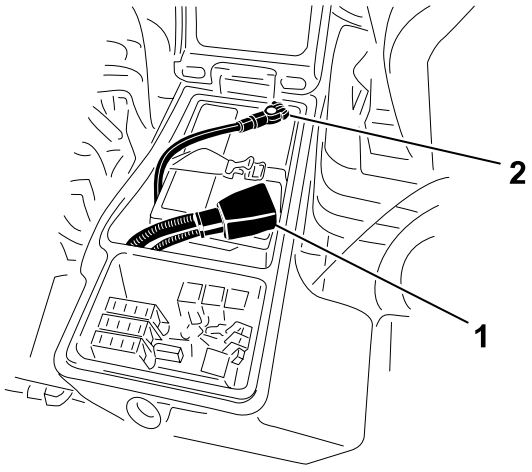

G425155

Connecting the Battery

1. Install the positive battery cable ① (red) to the positive (+) battery post.
2. Install the negative battery cable ② (black) to the negative (-) battery post.
3. Apply a coat of Grafo 112X (skin-over) grease, Toro Part No. 505-47 to the battery posts and battery-cable clamps.
4. Slide the rubber boot over the positive battery-cable clamp.
5. Close and latch the battery-compartment cover.

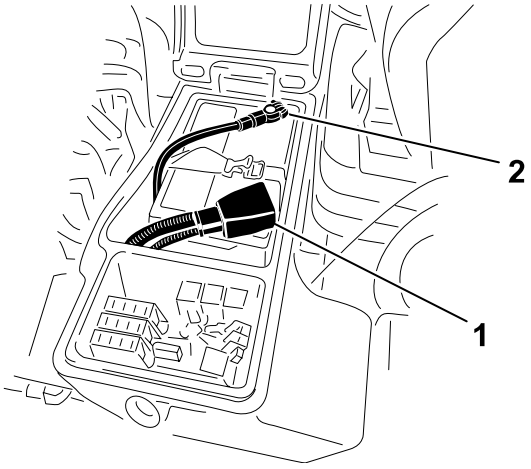

G425155

Charging the Battery

1. Disconnect the battery.
2. Connect a 3 to 4 A battery charger to the battery posts.
3. Charge the battery at a rate of 3 to 4 A for 4 to 8 hours.
4. When the battery is charged, disconnect the charger from the electrical outlet and battery posts.
5. Connect the battery.

Servicing the Battery

Note: Keep the terminals and the entire battery case clean because a dirty battery will discharge slowly.

1. Prepare the machine for maintenance.
2. Open the battery-compartment cover.
3. Check the condition of the battery.

   Note: Replace a worn or damaged battery.
4. Disconnect the battery cables, and remove the battery from the machine.
5. Wash the entire battery case with a solution of sodium bicarbonate (baking soda) and water.
6. Rinse the case with clean water.
7. Assemble the battery to the machine and connect the battery cables.
8. Close and latch the battery-compartment cover.

Replacing a Fuse

The fuse block is in the battery compartment.

1. Prepare the machine for maintenance.
2. Open the battery-compartment cover.
3. Replace the open fuse with the same fuse type and amperage rating.

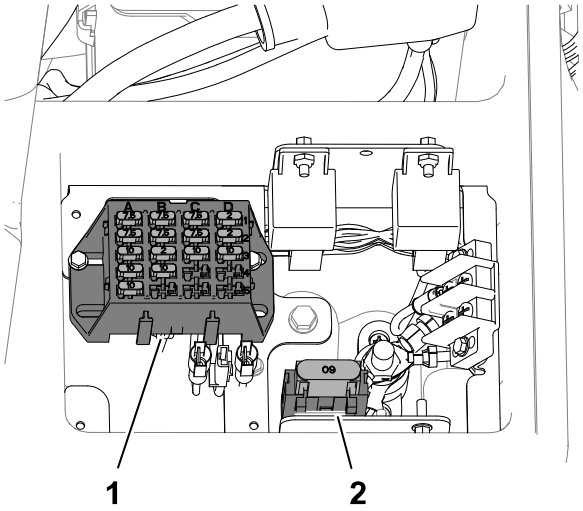

G425167

1 Fuse block

2 Maxi fuse socket

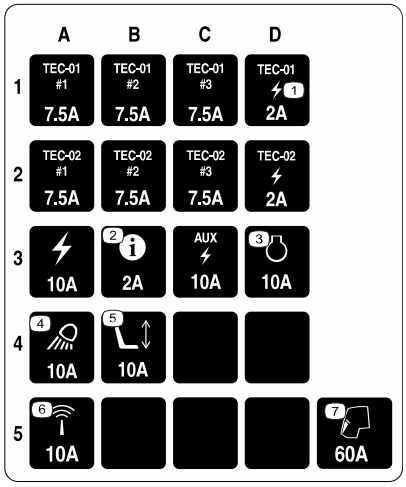

G425168

4. Close and latch the battery-compartment cover.

Drive System Maintenance

Checking the Tire Pressure

WARNING

Low tire pressure decreases machine side hill stability. This could cause a rollover, which could result in death or serious injury.

Do not under-inflate the tires.

Note: Maintain the recommended pressure in all tires to ensure a good quality of cut and proper machine performance.

1. Measure the air pressure in each tire. The correct air pressure in the tires is 83 to 103 kPa (12 to 15 psi).
2. If needed, add air to or remove air from the tires until you measure 83 to 103 kPa (12 to 15 psi).

Torquing the Wheel Nuts

WARNING

Failing to maintain proper torque of the wheel nuts could cause a wheel to come loose, which could result in death or serious injury.

Torque the front and rear wheel nuts to 115 to 136 N·m (85 to 100 ft-lb) after 1 to 4 hours of operation and again after 8 hours of operation. Torque the wheel nuts every 200 hours thereafter.

---

1. Prepare the machine for maintenance.



2. Torque the wheel nuts to **115 to 136 N·m (85 to 100 ft-lb)**.

   Note: The front wheel nuts are 1/2–20 UNF; the rear wheel nuts are M12 x 1.6-6H (metric).

Checking for End-Play in the Planetary Drives

DANGER

A machine on a jack may be unstable and slip off the jack, which could result in death or serious injury.

- **Do not start the engine while the machine is on a jack.**
- **Always remove the key from the switch before getting off the machine.**
- **Block the tires when you are raising the machine with a jack.**
- **Support the machine with jack stands.**

There should be no end-play in the planetary drives/drive wheels (i.e., the wheels should not move when you pull or push them in a direction parallel to the axle).

1. Prepare the machine for maintenance.
2. Chock the rear wheels and raise the front of machine.
3. Support the front frame of the machine with jack stands.
4. Grasp a front drive wheel (1) and push/pull it toward and away from the machine, noting any movement.
5. Repeat step 4 for the other drive wheel.
6. If either wheel moves, contact your authorized Toro distributor to have the planetary drive rebuilt.

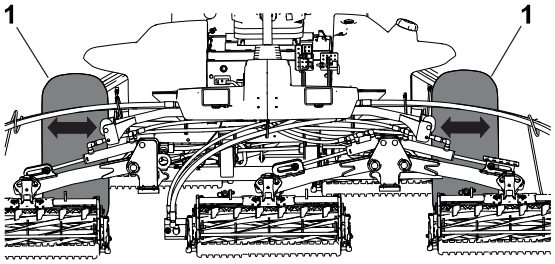

G425181

Checking the Planetary Gear-Drive Lubricant

Lubricant Specification: high quality SAE 85W-140 gear oil

1. Park the machine on level surface, position the wheel so that the fill plug (1) is at the 12 o'clock position, the check plug (2) is at 3 o'clock position, and the drain plug (3) is at the 6 o'clock position.

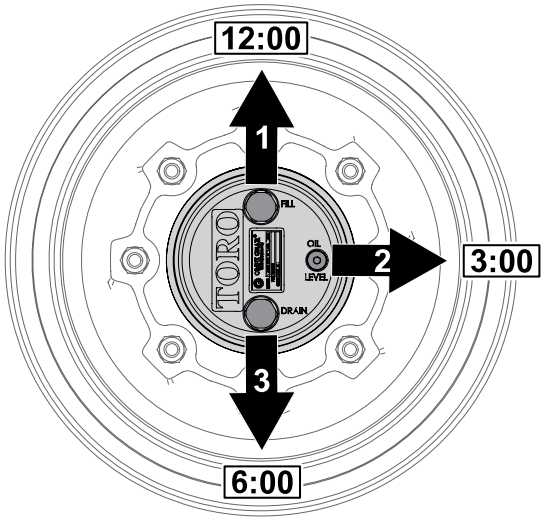

G425183

Checking the Planetary Gear-Drive Lubricant (continued)

2. Remove the check plug (2) at the 3 o'clock position.

   Note: The oil level should be at the bottom of the check-plug hole (1).

3. If the oil level is low, remove the fill plug at the 12 o'clock position and add oil until it begins to flow out of the hole at the 3 o'clock position.
4. Check the O-ring for the plug(s) for wear or damage.

   Note: Replace the O-ring(s) as needed.

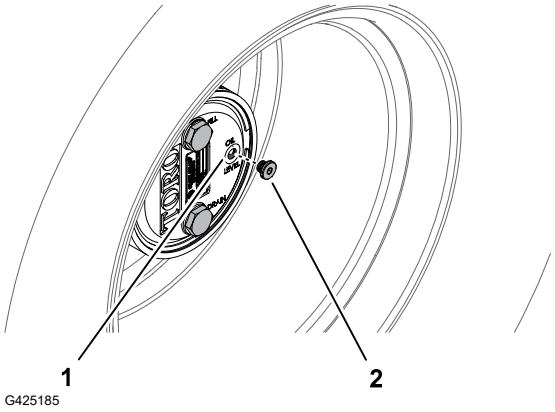

5. Install the plug(s).
6. Repeat this procedure on the planetary gear assembly at the other side of the machine.

Changing the Planetary-Gear-Drive Oil

Lubricant specification: high quality SAE 85W-140 gear oil

Planetary and brake housing lubrication capacity: 0.65 L (22 fl oz)

Draining the Planetary-Gear-Drive

1. Park the machine on level surface, position the wheel so that the fill plug is at the 12 o'clock position, the check plug is at 3 o'clock position, and the drain plug is at the 6 o'clock position.
2. Remove the fill plug at the 12 o'clock position and the check plug at the 3 o'clock position.

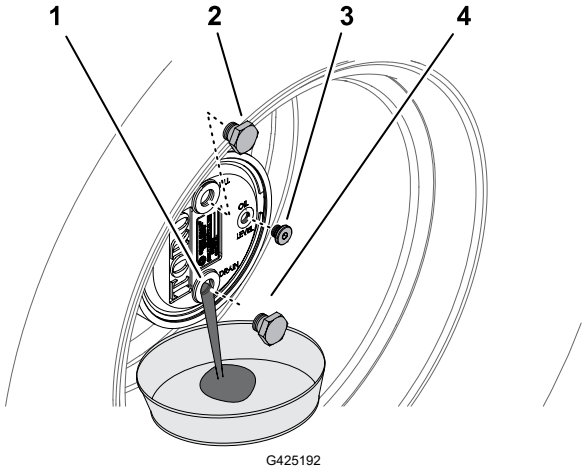

(1) Drain-plug hole
(2) Fill plug
(3) Check plug
(4) Drain plug

3. Place a drain pan under the planetary hub, remove the drain plug at the 6 o'clock position, and allow the oil to fully drain.

Changing the Planetary-Gear-Drive Oil (continued)

4. Check the O-rings for the fill, check, and drain plugs for wear or damage.

   Note: Replace the O-ring(s) as needed.

5. Install the drain plug into the drain hole of the planetary housing.
6. Place a drain pan under the brake housing, remove the drain plug, and allow the oil to fully drain.

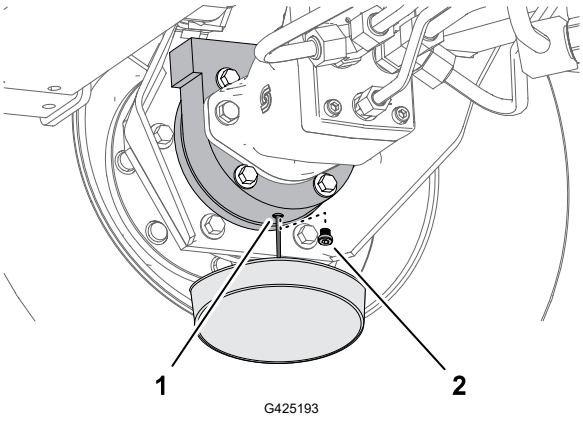

(1) Drain hole (brake housing)

(2) Drain plug

7. Check the O-ring for the plug for wear or damage and install the drain plug into the brake housing.

   Note: Replace the O-ring as needed.

Filling the Planetary-Gear-Drive with Lubricant

1. Through the fill-plug hole (1) , slowly fill the planetary with 0.65 L (22 fl oz) of high quality SAE 85W-140 gear oil.

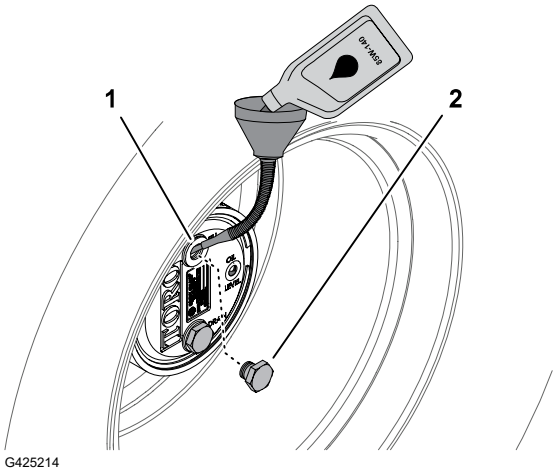

IMPORTANT

If the planetary fills before you add 0.65 L (22 fl oz) of oil, wait 1 hour or install the plug and move the machine approximately 3 m (10 ft) to distribute the oil through the brake system. Then, remove the plug and add the remaining oil.

Changing the Planetary-Gear-Drive Oil (continued)

2. Install the fill plug (2) and the check plug.
3. Wipe clean the planetary and brake housings.
4. Drain and fill the planetary-gear-drive on the other side of the machine.

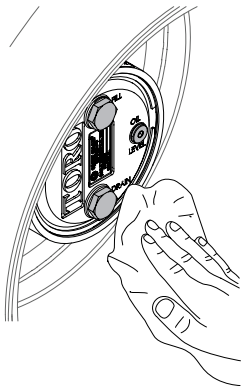

G425215

Inspecting the Rear Axle

Visually inspect the rear axle for leaks. Make all necessary repairs before operating.

Checking the Oil Level of the Rear Axle

Axle Oil Specification: SAE 85W-140 gear oil

1. Prepare the machine for maintenance.
2. Remove a check plug ① from the end of the axle housing.
3. Check the gear oil level in the axle through the check-plug hole.

   Note: The gear-oil level is correct if the oil level is at the bottom of the check-plug hole.
4. If the gear-oil level low, remove the fill plug ② and add the specified gear oil to raise the oil level to the bottom of the check-plug hole.
5. Install the check plug.
6. If removed, install the fill plug.

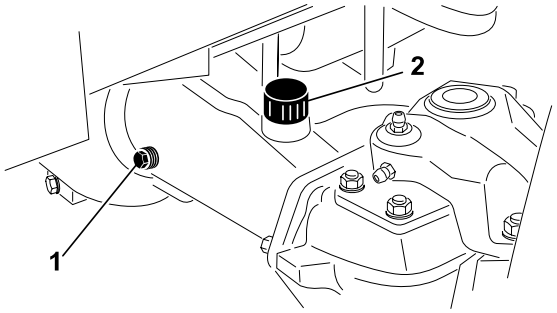

G425336

Changing the Oil in the Rear Axle

Rear Axle Oil Capacity: 2.4 L (80 fl oz)

1. Prepare the machine for maintenance.
2. Clean the area around the 3 drain plugs—1 at each bevel-gear case ① (outboard of the axle housings ②) and 1 in the center-gear case ③.
3. Remove each drain plug and allow the oil to drain into a drain pan.

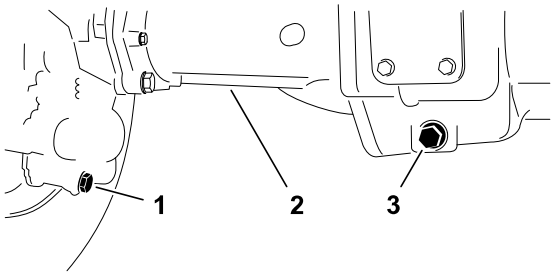

G425369

4. Remove the 2 axle housing check plugs ① and the fill plug ② to ease in draining of the oil.
5. Install the 3 drain plugs and the check plug at the axle housing with the breather fitting.
6. At the fill plug axle port, fill the axle with approximately 2.37 L (80 fl oz) of 85W-140 gear oil or until the oil level is at the bottom of the hole.
7. Install the check plug and the fill plug.

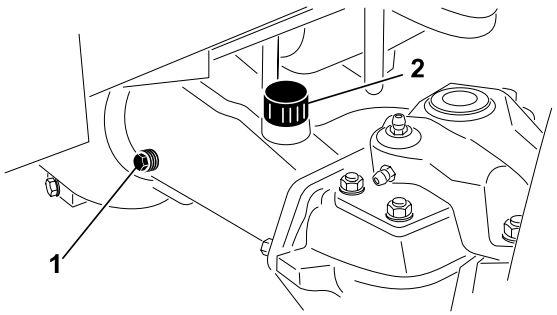

G425336

Inspecting the Reduction-Gear Case

Visually inspect the reduction-gear case for leaks. Make all necessary repairs before operating.

Checking the Lubricant in the Reduction-Gear Case

Reduction-Gear Case Oil Specification: SAE 85W-140 gear oil

1. Prepare the machine for maintenance.
2. Remove the check/fill plug (1) from the left side of the reduction-gear case (3).
3. Check the O-ring (2) for the plug is not worn or damaged.
4. Check the gear-case oil level.

   Note: The gear-oil level is correct if the oil level is at the bottom of the check/fill-plug hole.
5. If the gear-oil level is low, add enough of the specified case oil to bring the level up to the bottom of the check/fill-plug hole.
6. Install the check/fill plug.

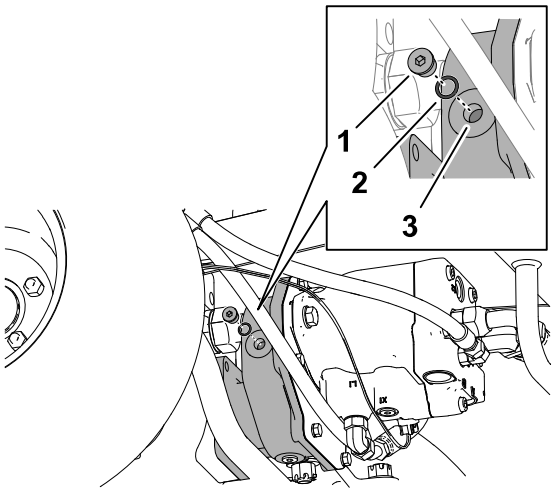

G425370

Mow Speed-Spacer Table

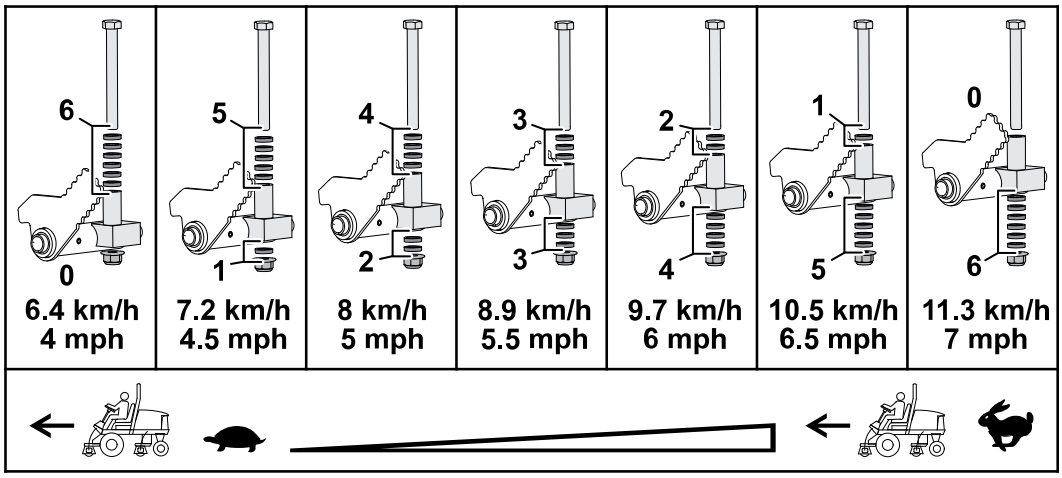

G425371

Adjusting Maximum Mow-Ground Speed

Adjusting the Mow Speed-Spacers

1. Prepare the machine for maintenance.
2. Use the Mow Speed-Spacer Table to determine the maximum ground speed when you mow, and the position of the short spacers that limit mow-ground speed.

   Note: Each short spacer adjusts the mowing speed by 0.8 km/h (0.5 mph).
3. Below the traction pedal, remove the stop bolt and flange locknut that secure the spacers to the mow-stop block.

Adjusting Maximum Mow-Ground Speed (continued)

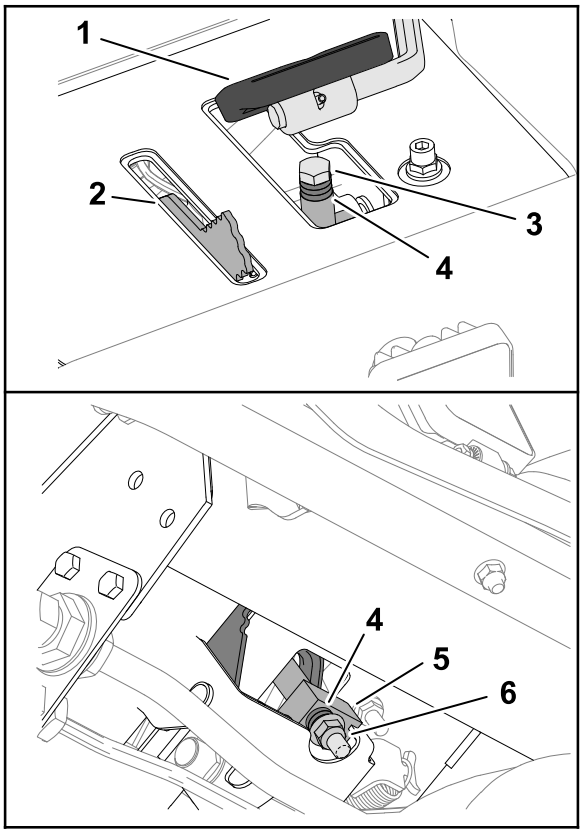

G425372

(1) Traction pedal
(2) Mow-speed limiter
(3) Stop bolt
(4) Short spacers
(5) Mow-stop block
(6) Flange locknut

4. Position the long spacer above the mow-stop block.
5. Position the short spacers as you determined in step 2.
6. Secure the spacers to the mow-stop block with the stop bolt and flange locknut that you removed in step 3.

   Note: You must install all 6 short spacers and the long spacer.
7. Set the mow speed in the InfoCenter.

Setting the Mow Speed in the InfoCenter

The mow speed setting in the InfoCenter is used by the TEC to adjust reel speed of the cutting units to the maximum mow-ground speed.

1. In the InfoCenter, access the **Main Menu**.
2. From the **Main Menu**, scroll down to **Machine Settings** and press the select button.
3. In **Machine Settings**, scroll down to **Mow Speed**.
4. Press the left and right navigation buttons until the mow speed shown in the display is the same as the maximum mow-ground speed that you previously determined.

   Note: The mow speed setting increases or decreases in 0.8 kph (0.5 mph) increments.

Adjusting the Traction Drive for Neutral

The machine must not move forward or backward when you release the traction pedal. If the machine moves, adjust the traction drive for neutral.

1. Park the machine on a level surface, shut off the engine, position the speed control into the low range, and lower the cutting units.
2. Press only the right brake pedal and engage the parking brake.
3. Jack up the left side of the machine until the left front tire is off the ground. Support the machine with jack stands to prevent it from falling accidentally.
4. Start the engine and allow it run at low idle.
5. Adjust the jam nuts on the rod end to move the traction rod forward to eliminate forward creep or rearward to eliminate rearward creep .

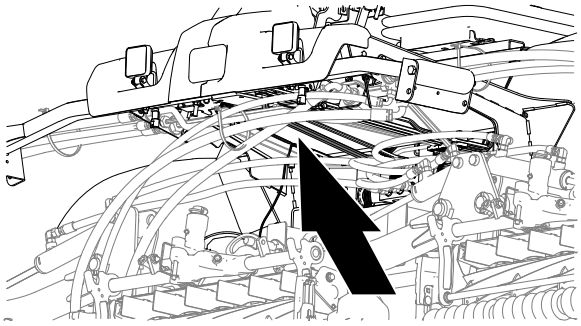

G425376

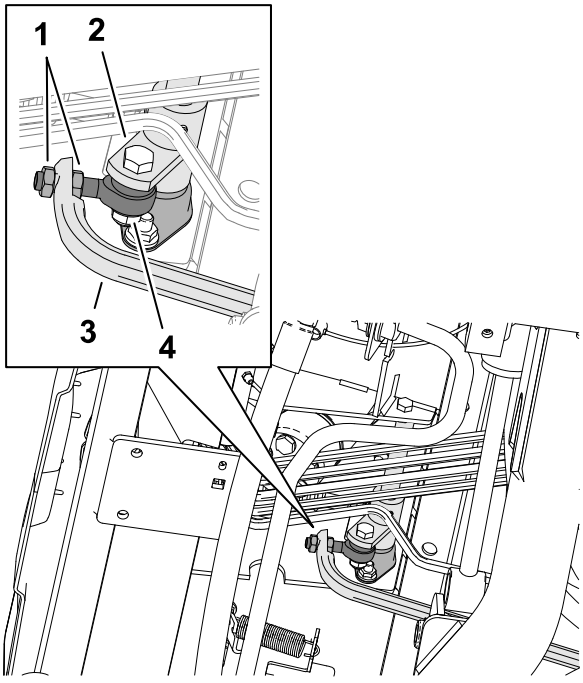

G425377

1. Jam nuts
2. Traction hub pivot
3. Traction rod
4. Rod end

6. When the wheel stops rotating, tighten the jam nuts to secure the adjustment.
7. Shut off the engine and remove the key.
8. Remove the jack stands and lower the machine to the ground.

Adjusting the Traction Drive for Neutral (continued)

9. Test drive the machine to ensure that it does not creep.

Checking the Rear-Wheel Alignment

1. Prepare the machine for maintenance.
2. Measure the center-to-center distance (at axle height) at the front and rear of the steering tires.

   Note: The front measurement must be 3 mm (1/8 inch) less than the rear measurement.

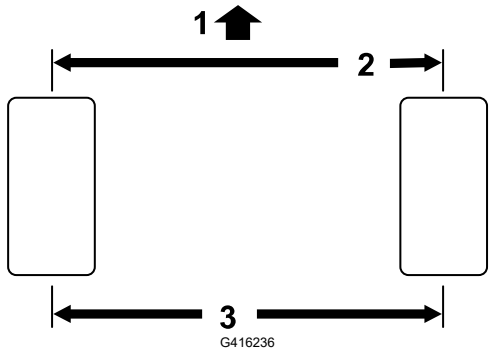

1. Front of the traction unit
2. 3 mm (1/8 inch) less than the rear of the tire
3. Center-to-center distance

Adjusting the Rear-Wheel Toe-In

1. At the rear axle, remove the cotter pin and the slotted nut from either tie-rod end.

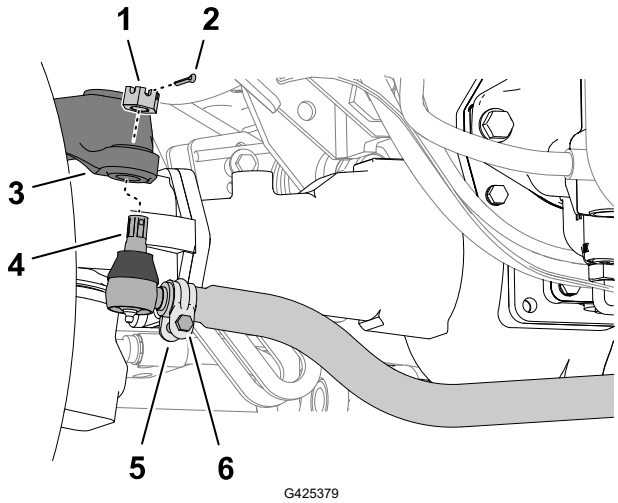

1. Slotted nut
2. Cotter pin
3. Axle case-steering arm
4. Tie-rod end
5. Clamp
6. Nut and bolt

2. Separate the tie-rod end from the axle case-steering arm.

Adjusting the Rear-Wheel Toe-In (continued)

3. Loosen the clamps at both ends of the tie rods.
4. Rotate the detached ball joint inward or outward a complete revolution.
5. Tighten the clamp at the detached end of the tie rod.
6. Rotate the entire tie-rod assembly the same direction (inward or outward) a complete revolution.
7. Tighten the clamp at the connected end of the tie rod.
8. Assemble the tie-rod end to the axle case-steering arm with the slotted nut.
9. Measure the toe-in.
10. If needed, remove the slotted nut and repeat steps 2 through 9.
11. When the difference between the front and rear measurements are 3 mm (1/8 inch) less, tighten the slotted nut and install a new cotter pin.

Cooling System Maintenance

Coolant Specifications

The coolant reservoir is filled at the factory with a 50/50 solution of water and ethylene glycol base extended-life coolant.

IMPORTANT

Use only commercially available coolants that meet the specifications listed in the Extended Life Coolant Standards Table.

Do not use conventional (green) inorganic-acid technology (IAT) coolant in your machine. Do not mix conventional coolant with extended-life coolant.

Coolant Type Table

Ethylene-Glycol Coolant Type	Corrosion Inhibitor Type
Extended-life antifreeze	Organic-acid technology (OAT)

IMPORTANT

Do not rely on the color of the coolant to identify the difference between conventional (green) inorganic-acid technology (IAT) coolant and extended-life coolant.

Coolant manufacturers may dye extended-life coolant in one of the following colors: red, pink, orange, yellow, blue, teal, violet, and green. Use coolant that meets the specifications in the Extended Life Coolant Standards Table.

Coolant Specifications (continued)

Extended Life Coolant Standards

ATSM International	SAE International
D3306 and D4985	J1034, J814, and 1941

IMPORTANT

Coolant concentration should be a 50/50 mixture of coolant to water.

- **Preferred:** When mixing coolant from a concentrate, mix it with distilled water.
- **Preferred option:** If distilled water is not available, use a pre-mix coolant instead of a concentrate.
- **Minimum requirement:** If distilled water and pre-mix coolant are not available, mix concentrated coolant with clean drinkable water.

Cooling system capacity

Approximately 12.3 L (13 US qt)

Checking the Coolant Level

⚠ CAUTION ⚠

If the engine has been running, the pressurized, hot coolant can escape, which could result in minor or moderate injury.

- **Do not open the radiator cap when the engine is running.**
- **Use a rag when opening the radiator cap, and open the cap slowly to allow steam to escape.**

Checking the Coolant Level (continued)

1. Prepare the machine for maintenance.
2. Open the hood, and wait for the engine to cool..
3. Carefully remove the radiator cap (2).
4. Check the coolant level in the radiator.

   Note: The coolant level is correct if it is to the top of the filler neck (3) of the radiator.
5. Check the coolant level in the expansion tank.

   Note: The coolant level is correct if it is to the FULL mark (4) of the expansion tank.
6. If the coolant is low, add the specified coolant to the radiator, expansion tank, or both.
7. Install the radiator cap and the expansion-tank cap (1).
8. Close and latch the hood.

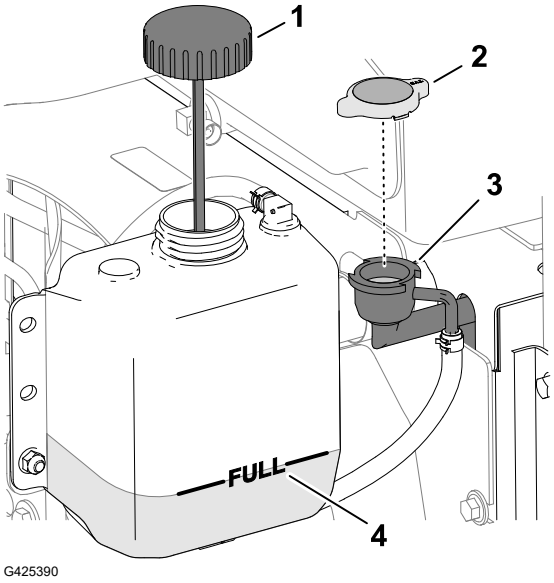

G425390

Servicing the Engine Cooling System

1. Prepare the machine for maintenance.
2. Unlatch and open the rear screen.

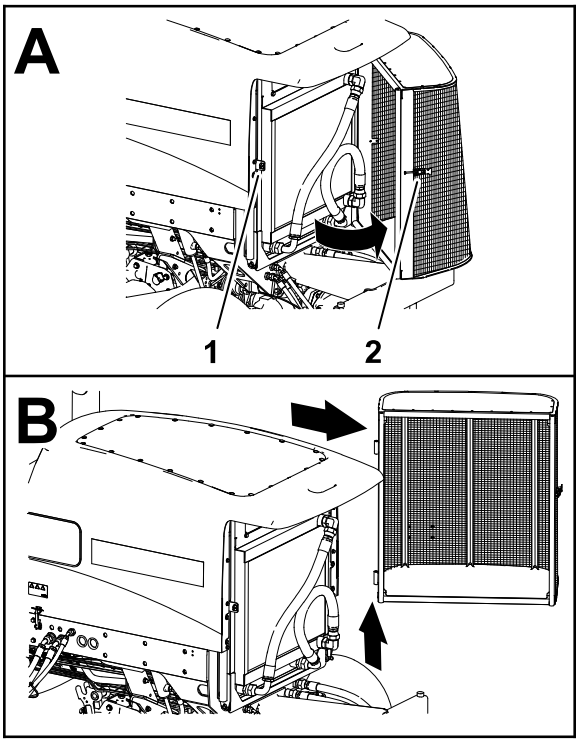

G425401

(1) Latch keeper

(2) Rear screen latch

3. Clean both sides of the screen.
4. Lift the screen off the hinge pins, and remove the screen from the machine.
5. Open the hood.
6. Clean both sides of the oil cooler/radiator area thoroughly with compressed air. Start from the front and blow the debris out toward the back. Then clean from the back side and blow toward the front. Repeat the procedure several times until all chaff and debris is removed.

IMPORTANT

Cleaning the oil cooler/radiator with water may promote premature corrosion damage to components and compact debris.

Servicing the Engine Cooling System (continued)

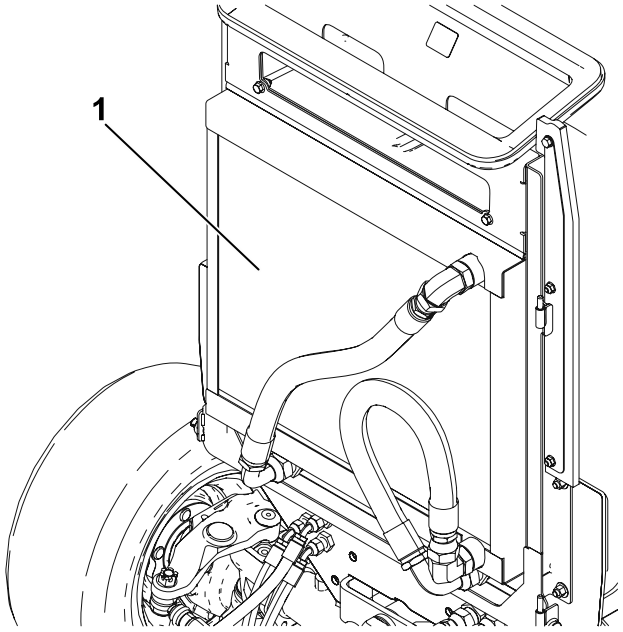

G425402

(1) Oil cooler/radiator

7. Close and latch the hood.
8. Assemble the screen onto the hinge pins.

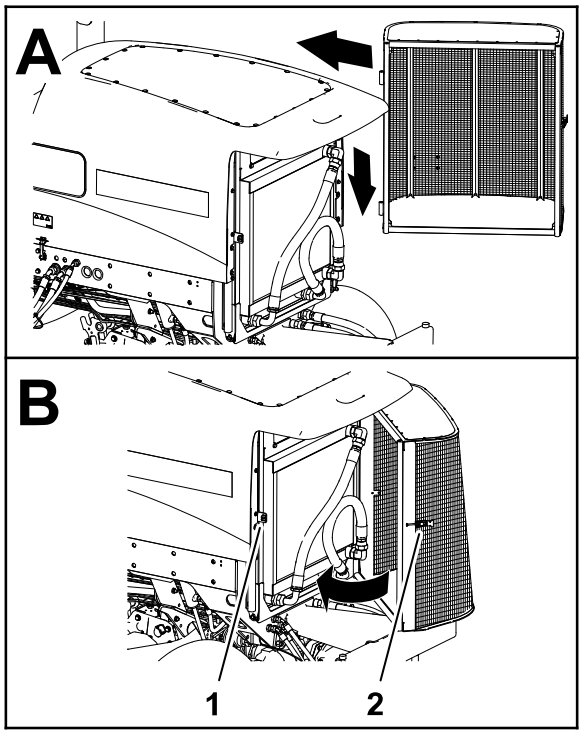

G425403

(1) Latch keeper

(2) Rear screen latch

9. Close and latch the screen.

Brake Maintenance

Adjusting the Service Brakes

Adjust the service brakes when there is more than 13 mm (1/2 inch) of free travel of the brake pedal, or if the brakes slip. Free travel is the distance the brake pedal moves before you feel braking-pedal resistance.

1. Prepare the machine for maintenance.
2. Disengage the pedal-locking latch between the brake pedals so that both pedals work independently of each other.

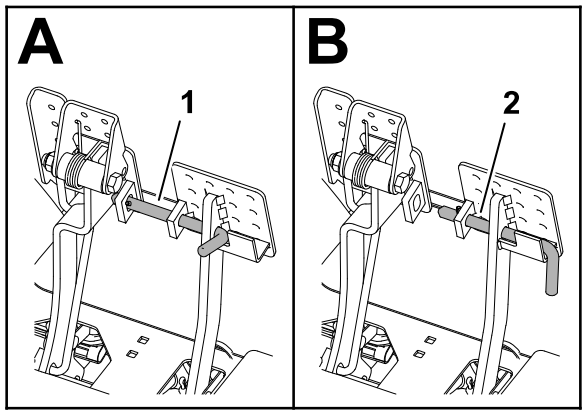

G425404

(1) Brake pedals locked

(2) Brake pedals unlocked

3. Loosen the front jam nut on the threaded end of the brake cable.

Adjusting the Service Brakes (continued)

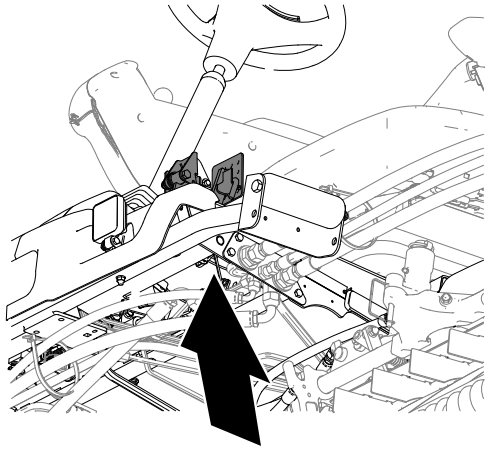

G425405

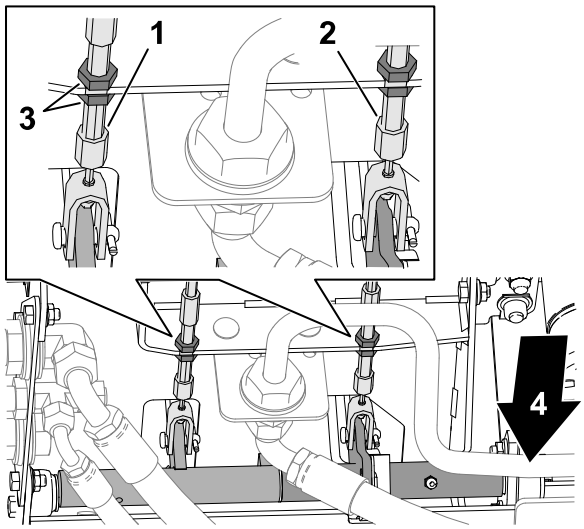

G425406

1. Left brake cable
2. Right brake cable
3. Jam nuts
4. Front of the machine

4. To reduce free travel of the brake pedals, tighten the rear jam nut to move the cable rearward until the brake pedals have 0 to 13 mm (0 to 1/2 inch) of free travel.

   Note: Ensure that there is no brake-cable tension when the pedal is released.

5. Tighten the front jam nut after the brakes are adjusted correctly.
6. If needed, repeat steps 3 through 5 at the other brake cable.

Belt Maintenance

Tensioning the Alternator Belt

1. Prepare the machine for maintenance.
2. Open the hood.
3. Check the condition of the alternator belt.

   Note: Replace a worn or damaged belt.
4. Check the tension of the alternator belt by pressing it midway between the pulleys.

   Note: With 45 N (10 lb) of force, the belt should deflect 10 mm (3/8 inch).
5. If the deflection is incorrect, complete the following procedure to tension the belt:
   A. Loosen the alternator (2) mounting bolts (1).
   B. Increase or decrease the alternator-belt tension, and tighten the mounting bolts.
   C. Check the deflection of the belt again to ensure that the tension is correct.
6. Close and latch the hood.

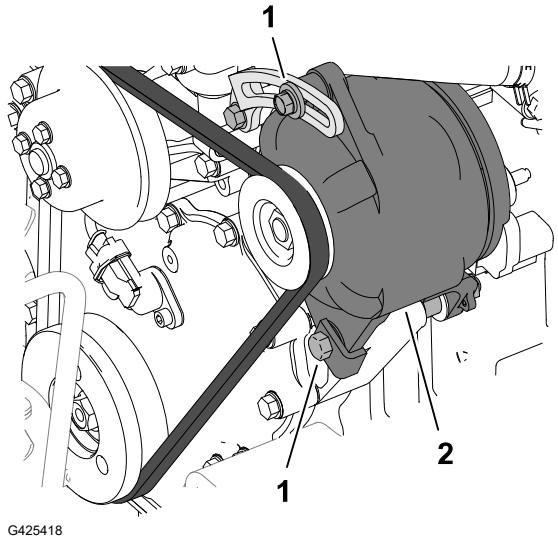

Hydraulic System Maintenance

Inspecting the Hydraulic Lines and Hoses

Inspect the hydraulic lines and hoses for leaks, kinked lines, loose mounting supports, wear, loose fittings, weather deterioration, and chemical deterioration.

Note: Make all necessary repairs before operating.

Hydraulic Fluid Specifications

The reservoir is filled at the factory with high-quality hydraulic fluid. Check the level of the hydraulic fluid before you first start the engine and daily thereafter.

Recommended hydraulic fluid: Toro PX Extended Life Hydraulic Fluid; available in 19 L (5 US gallon) pails or 208 L (55 US gallon) drums.

Note: A machine using the recommended replacement fluid requires less frequent fluid and filter changes.

Hydraulic Fluid Specifications (continued)

Alternative hydraulic fluids: If Toro PX Extended Life Hydraulic Fluid is not available, you may use another conventional, petroleum-based hydraulic fluid having specifications that fall within the listed range for all the following material properties and that it meets industry standards. Do not use synthetic fluid. Consult with your lubricant distributor to identify a satisfactory product.

Note: Toro does not assume responsibility for damage caused by improper substitutions, so use products only from reputable manufacturers who will stand behind their recommendation.

High Viscosity Index/Low Pour Point Anti-wear Hydraulic Fluid, ISO VG 46

Material Properties:

Viscosity, ASTM D445	cSt @ 40°C (104°F) 44 to 48
Viscosity Index ASTM D2270	140 or higher
Pour Point, ASTM D97	-37°C to -45°C (-34°F to -49°F)
Industry Specifications:	Eaton Vickers 694 (I-286-S, M-2950-S/ 35VQ25 or M-2952-S)

Note: Many hydraulic fluids are almost colorless, making it difficult to spot leaks. A red dye additive for the hydraulic fluid is available in 20 ml (0.67 fl oz) bottles. A bottle is sufficient for 15 to 22 L (4 to 6 US gallons) of hydraulic fluid. Order Part No. 44-2500 from your authorized Toro distributor.

IMPORTANT

Toro Premium Synthetic Biodegradable Hydraulic Fluid is the only synthetic biodegradable fluid approved by Toro. This fluid is compatible with the elastomers used in Toro hydraulic systems and is suitable for a wide-range of temperature conditions. This fluid is compatible with conventional mineral oils, but for maximum biodegradability and performance, the hydraulic system should be thoroughly flushed of conventional fluid. The oil is available in 19 L (5 US gallon) pails or 208 L (55 US gallon) drums from your authorized Toro distributor.

Hydraulic tank capacity

28.4 L (7.5 US gallons)

Checking the Hydraulic-Fluid Level

The reservoir is filled at the factory with high-quality hydraulic fluid.

1. Prepare the machine for maintenance.
2. Clean the area around the filler neck and cap of the hydraulic tank.

Checking the Hydraulic-Fluid Level (continued)

3. Remove the hydraulic-tank cap ① from the tank.
4. Remove the dipstick ② from the filler neck and wipe it with a clean rag.
5. Insert the dipstick into the filler neck; then remove it and check the fluid level.

   The correct hydraulic-fluid level is between the full mark ③ and the add mark ④ on the dipstick.
6. If the level is low, add the specified hydraulic fluid to raise the fluid level to the full mark.
7. Install the dipstick and hydraulic-tank cap to the tank.

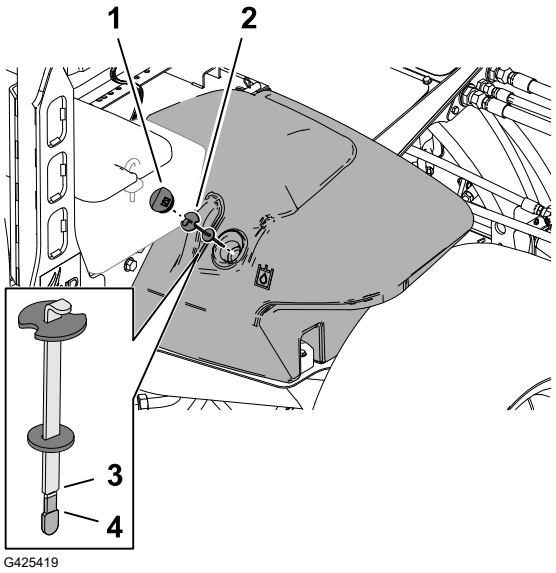

Replacing the Hydraulic Filters

Use the following Toro hydraulic filters:

Name	Toro Part No.	Location
Return filter	94-2621	Below the right frame channel.
Charge filter	75-1310	Under the seat plate.

IMPORTANT

Using another type of filter may void the warranty on some components.

Changing the Charge Filter

1. Prepare the machine for maintenance.
2. Tilt the seat.

Replacing the Hydraulic Filters (continued)

3. Clean the area around the charge filter ② and filter head ①.
4. Align a drain pan under the filter and remove the filter.
5. Wipe the filter mounting filter surface of the filter head with a clean rag.
6. Lubricate the new filter gasket and fill the filter with the specified hydraulic fluid.
7. Thread the filter onto the filter head until the gasket contacts the mounting plate, then tighten the filter an additional 1/2 turn.

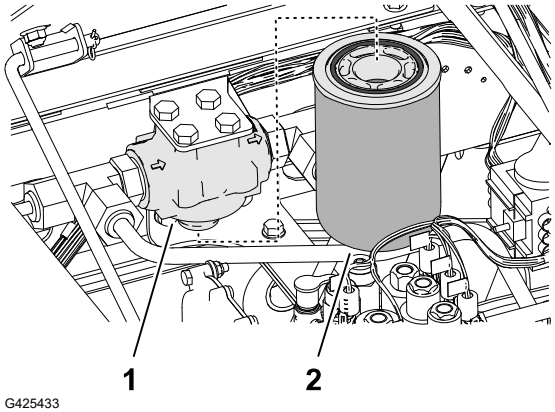

G425433

Changing the Return Filter

1. Clean the area around the return filter ② and filter head ①.
2. Align a drain pan under the return filter and remove the filter.
3. Wipe the filter mounting filter surface of the filter head with a clean rag.
4. Lubricate the new filter gasket, fill the filter with the specified hydraulic fluid, and then drain the filter.

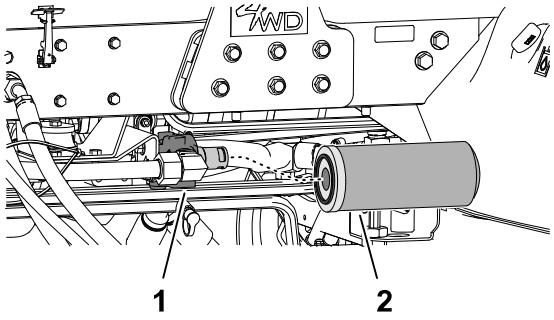

G425445

5. Thread the filter onto the filter head until the gasket contacts the mounting plate, then tighten the filter an additional 1/2 turn.

Purging Air from the Hydraulic System

1. Start the engine and let it run for about 2 minutes to purge air from the system.
2. Check around the filters and filter heads for hydraulic leaks.

   Note: Repair any hydraulic leaks.
3. Shut off the engine and remove the key.
4. Lower the seat.

Changing the Hydraulic Fluid

Draining the Hydraulic Fluid

If the fluid becomes contaminated, contact your local authorized Toro distributor, because the system must be flushed. Contaminated fluid looks milky or black when compared to clean fluid.

Drain Pan Capacity: 30 L (8 US gallons) or more

Changing the Hydraulic Fluid (continued)

1. Prepare the machine for maintenance.
2. Open the hood.
3. Align the drain pan under the hydraulic tank.
4. Disconnect the case-return hose ① from the straight fitting ② at the bottom of the tank, and drain hydraulic fluid.
5. When the hydraulic fluid stops draining, assemble the case-return hose to the tank fitting.
6. Torque the hose fitting to **50 to 63 N·m (37 to 47 ft-lb)**.

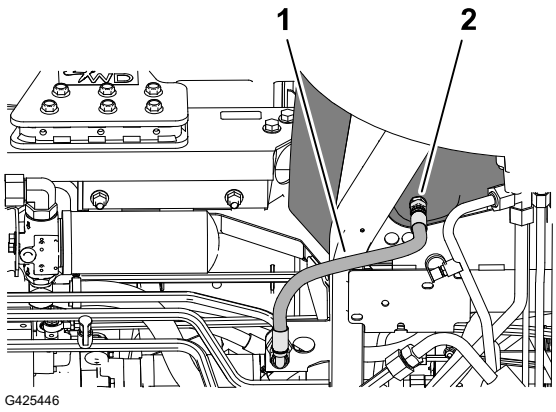

G425446

Filling the Hydraulic Tank

1. Fill the reservoir with the specified hydraulic fluid.

IMPORTANT

Use only the hydraulic fluids specified. Other fluids could cause system damage.

2. Install the dipstick ② and hydraulic-tank cap ① to the tank.
3. Start the engine and operate all the hydraulic controls to distribute hydraulic fluid throughout the system.
4. Check for hydraulic leaks, shut off the engine, and remove the key.

   Note: Repair all hydraulic leaks.
5. Close and latch the hood.
6. Check the fluid level.

   Note: If needed, add enough to raise the level to the full mark on the dipstick. Do not overfill the hydraulic tank.

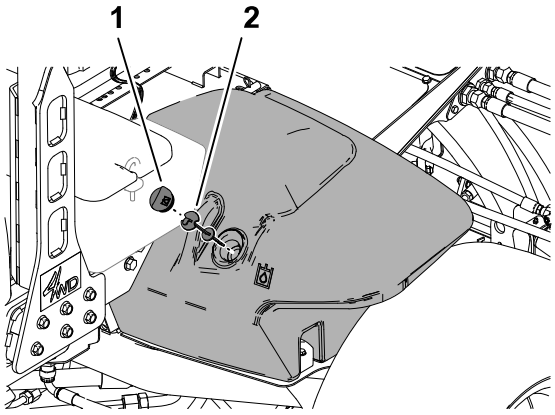

G425457

Cutting Unit Maintenance

Backlapping the Cutting Units

WARNING

Contact with the cutting units or other moving parts could result in death or serious injury.

- **Keep your fingers, hands, and clothing away from the cutting units and other moving parts.**
- **Never attempt to turn the cutting units by hand or foot while the engine is running.**

Note: Additional instructions and procedures on backlapping are available in the Toro *Sharpening Reel and Rotary Mowers Manual*, Form No. 80-300SL.

Preparing the Machine

1. Park the machine on a level surface, lower the cutting units, engage the parking brake, shut off the engine, and move the PTO switch to the DISENGAGE position.
2. Open the hood.
3. Make initial reel-to-bedknife adjustments appropriate for backlapping on all cutting units which are to be backlapped; refer to the cutting unit *Operator's Manual*.
4. Rotate the front, rear, or both backlap levers to the R (backlap) position.

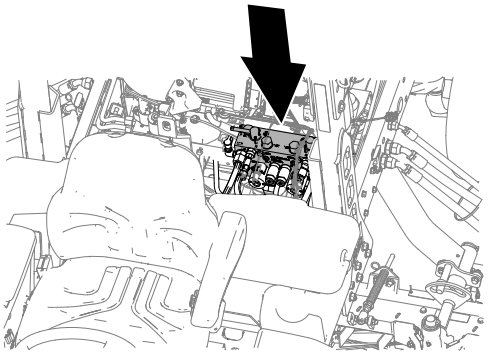

G425458

Backlapping the Cutting Units (continued)

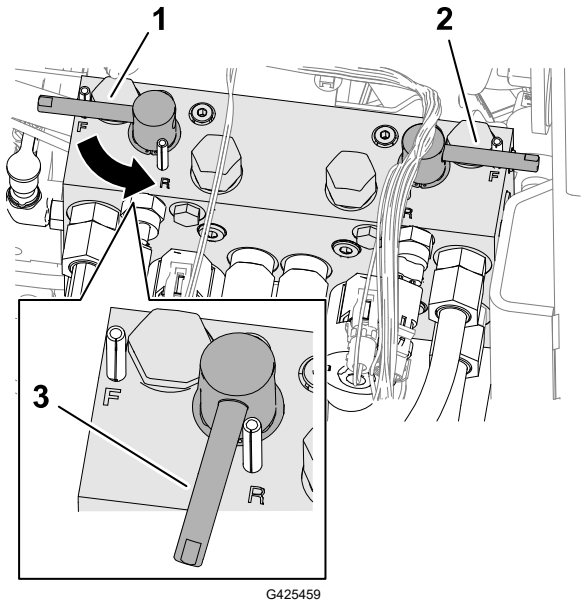

G425459

1. Backlap lever (front cutting units 4, 1, and 5)
2. Backlap lever (rear cutting units 2 and 3)
3. Reverse rotation (backlap)

Lapping the Reels and Bedknife

WARNING

Changing the engine speed while backlapping may cause the cutting units to stall, which could result in death or serious injury.

- **Never change the engine speed while backlapping.**
- **Backlap only at idle engine speed.**

Note: When backlapping, the front units all operate together, and the rear units operate together.

1. Ensure that the traction pedal is in the neutral position and the parking brake is engaged.
2. Start the engine and run it at low-idle speed.

Backlapping the Cutting Units (continued)

3. Rotate the lever for the mow-speed limiter (1) forward to the MOW position.
4. Press the PTO switch (2) to the ENGAGE position.
5. Move the lower mow/raise control lever (3) forward.

   Note: The reels you set for backlapping run backward.
6. Apply lapping compound to the reels with a long-handled brush.

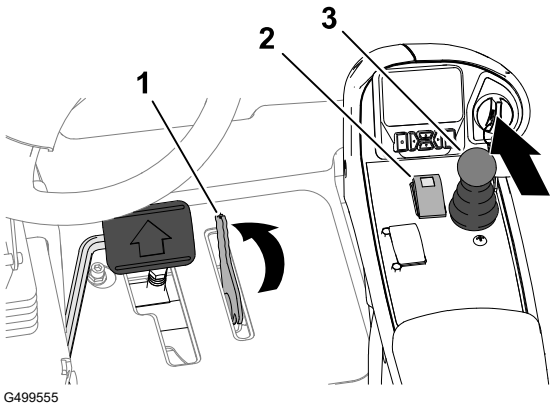

DANGER

Contacting the cutting units when they are moving will result in death or serious injury.

- **Do not use a short-handled brush.**
- **To avoid personal injury, ensure that you are clear of the cutting units before proceeding.**

7. If the reels stall or become erratic while backlapping, increase the throttle speed until the reel stabilizes.
8. If you need to make an adjustment to the cutting units while backlapping, perform the following steps:
   A. Move the lower mow/raise control lever rearward.

      Note: The cutting units shut off, but do not raise.
   B. Press the PTO switch to the DISENGAGE position.
   C. Shut off the engine and remove the key.
   D. Adjust the cutting units.
   E. Repeat steps 2 through 7.
9. Repeat step 6 for all cutting units that you want to backlap.

Finishing Backlapping

IMPORTANT

If you do not return the backlap switch to the OFF position after backlapping, the cutting units will not raise or function properly.

1. Shut off the engine and remove the key.

Backlapping the Cutting Units (continued)

2. Wash all lapping compound off of the cutting units.
3. Adjust the cutting unit reel-to-bedknife as needed.
4. Rotate the backlap levers to the F (mow) position.

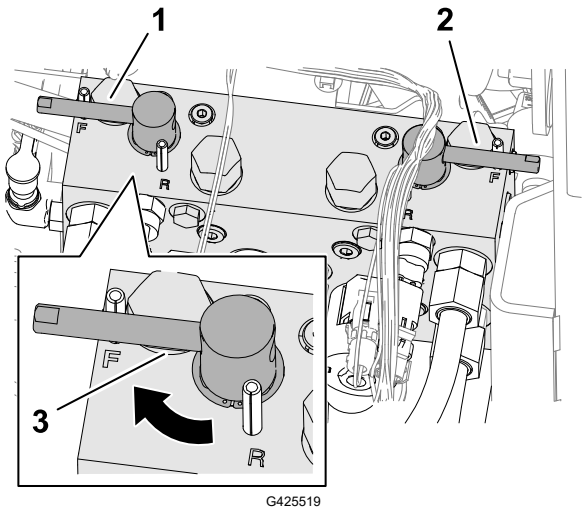

G425519

(1) Backlap lever (front cutting units 4, 1, and 5)

(2) Backlap lever (rear cutting units 2 and 3)

(3) Forward rotation (mow)

5. For a better cutting edge, run a file across the front face of the bedknife after lapping.

   Note: This removes any burrs or rough edges that may have built up on the cutting edge.
6. Close and latch the hood.

Chassis Maintenance

Inspecting the Seat Belt

1. Inspect the seat belt for wear, cuts, and other damage. Replace the seat belt(s) if any component does not operate properly.
2. Clean the seat belt as necessary.

Cleaning

Washing the Machine

Wash the machine as needed using water alone or with a mild detergent. You may use a rag when washing the machine.

IMPORTANT

- **Do not use brackish or reclaimed water to clean the machine.**
- **Do not use power-washing equipment to wash the machine. Power-washing equipment may damage the electrical system, loosen important decals, or wash away necessary grease at friction points. Avoid excessive use of water near the control panel, engine, and battery.**
- **Do not wash the machine with the engine running. Washing the machine with the engine running may result in internal engine damage.**

Storing the Machine

1. Park the machine on a level surface, lower the cutting units, engage the parking brake, shut off the engine, and remove the key.
2. Thoroughly clean the traction unit, cutting units, and the engine.
3. Check the tire pressure.
4. Check all fasteners for looseness; tighten them as necessary.
5. Grease or oil all grease fittings and pivot points. Wipe up any excess lubricant.
6. Lightly sand and use touch-up paint on painted areas that are scratched, chipped, or rusted. Repair any dents in the metal body.
7. Service the battery and cables as follows:
   A. Remove the battery terminals from the battery posts.
   B. Clean the battery, terminals, and posts with a wire brush and baking-soda solution.
   C. Coat the cable terminals and battery posts with Grafo 112X skin-over grease (Toro Part No. 505-47) or petroleum jelly to prevent corrosion.
   D. Slowly charge the battery every 60 days for 24 hours to prevent lead sulfation of the battery.
8. Prepare the engine as follows:
   A. Drain the engine oil from the oil pan and install the drain plug.
   B. Remove and discard the oil filter. Install a new oil filter.
   C. Fill the engine with specified motor oil.
   D. Start the engine and run it at idle speed for approximately 2 minutes.
   E. Shut off the engine and remove the key.
   F. Flush the fuel tank with fresh, clean fuel.
   G. Secure all the fuel-system fittings.
   H. Thoroughly clean and service the air-cleaner assembly.
   I. Seal the air-cleaner inlet and the exhaust outlet with weatherproof tape.
   J. Check the antifreeze protection and add a 50/50 solution of water and ethylene glycol antifreeze as needed for the expected minimum temperature in your area.

Storing the Battery

If you are storing the machine for more than 30 days, remove the battery and charge it fully. Either store it on the shelf or on the machine. Leave the cables disconnected if they are stored on the machine. Store the battery in a cool atmosphere to avoid quick deterioration of

the charge in the battery. To prevent the battery from freezing, ensure that it is fully charged. The specific gravity of a fully charged battery is 1.265 to 1.299.

The Toro Warranty

Two-Year or 1,500 Hours Limited Warranty

Conditions and Products Covered

The Toro Company warrants your Toro Commercial product (“Product”) to be free from defects in materials or workmanship for 2 years or 1,500 operational hours*, whichever occurs first. This warranty is applicable to all products with the exception of Aerators (refer to separate warranty statements for these products). Where a warrantable condition exists, we will repair the Product at no cost to you including diagnostics, labor, parts, and transportation. This warranty begins on the date the Product is delivered to the original retail purchaser. *Product equipped with an hour meter.

Instructions for Obtaining Warranty Service

You are responsible for notifying the Commercial Products Distributor or Authorized Commercial Products Dealer from whom you purchased the Product as soon as you believe a warrantable condition exists. If you need help locating a Commercial Products Distributor or Authorized Dealer, or if you have questions regarding your warranty rights or responsibilities, you may contact us at:

Toro Commercial Products Service Department
8111 Lyndale Avenue South
Bloomington, MN 55420-1196
952-888-8801 or 800-952-2740
E-mail: commercial.warranty@toro.com

Owner Responsibilities

As the product owner, you are responsible for required maintenance and adjustments stated in your *Operator's Manual*. Repairs for product issues caused by failure to perform required maintenance and adjustments are not covered under this warranty.

Items and Conditions Not Covered

Not all product failures or malfunctions that occur during the warranty period are defects in materials or workmanship. This warranty does not cover the following:

- Product failures which result from the use of non-Toro replacement parts, or from installation and use of add-on, or modified non-Toro branded accessories and products.
- Product failures which result from failure to perform recommended maintenance and/or adjustments.
- Product failures which result from operating the Product in an abusive, negligent, or reckless manner.
- Parts consumed through use that are not defective. Examples of parts which are consumed, or used up, during normal Product operation include, but are not limited to, brake pads and linings, clutch linings, blades, reels, rollers and bearings (sealed or greasable), bed knives, spark plugs, castor wheels and bearings, tires, filters, belts, and certain sprayer components such as diaphragms, nozzles, flow meters, and check valves.
- Failures caused by outside influence, including, but not limited to, weather, storage practices, contamination, use of unapproved fuels, coolants, lubricants, additives, fertilizers, water, or chemicals.
- Failure or performance issues due to the use of fuels (e.g. gasoline, diesel, or biodiesel) that do not conform to their respective industry standards.
- Normal noise, vibration, wear and tear, and deterioration. Normal “wear and tear” includes, but is not limited to, damage to seats due to wear or abrasion, worn painted surfaces, scratched decals or windows.

Parts

Parts scheduled for replacement as required maintenance are warranted for the period of time up to the scheduled replacement time for that part. Parts replaced under this warranty are covered for the duration of the original product warranty and become the property of Toro. Toro will make the final decision whether to repair any existing part or assembly or replace it. Toro may use remanufactured parts for warranty repairs.

Deep Cycle and Lithium-Ion Battery Warranty

Deep cycle and Lithium-Ion batteries have a specified total number of kilowatt-hours they can deliver during their lifetime. Operating, recharging, and maintenance techniques can extend or reduce total battery life. As the batteries in this product are consumed, the amount of useful work between charging intervals will slowly decrease until the battery is completely worn out. Replacement of worn out batteries, due to normal consumption, is the responsibility of the product owner.

Note: (Lithium-Ion battery only) Refer to the battery warranty for additional information.

Lifetime Crankshaft Warranty (ProStripe 02657 Model Only)

The Prostripe which is fitted with a genuine Toro Friction Disc and Crank-Safe Blade Brake Clutch (integrated Blade Brake Clutch (BBC) + Friction Disc assembly) as original equipment and used by the original purchaser in accordance with recommended operating and maintenance procedures, are covered by a Lifetime Warranty against engine crankshaft bending. Machines fitted with friction washers, Blade Brake Clutch (BBC) units and other such devices are not covered by the Lifetime Crankshaft Warranty.

Maintenance is at the Owner’s Expense

Engine tune-up, lubrication, cleaning and polishing, replacement of filters, coolant, and completing recommended maintenance are some of the normal services Toro products require that are at the owner’s expense.

General Conditions

Repair by an Authorized Toro Distributor or Dealer is your sole remedy under this warranty.

The Toro Company is not liable for indirect, incidental or consequential damages in connection with the use of the Toro Products covered by this warranty, including any cost or expense of providing substitute equipment or service during reasonable periods of malfunction or non-use pending completion of repairs under this warranty. Except for the Emissions warranty referenced below, if applicable, there is no other express warranty. All implied warranties of merchantability and fitness for use are limited to the duration of this express warranty.

Some states do not allow exclusions of incidental or consequential damages, or limitations on how long an implied warranty lasts, so the above exclusions and limitations may not apply to you. This warranty gives you specific legal rights, and you may also have other rights which vary from state to state.

Note Regarding Emissions Warranty

The Emissions Control System on your Product may be covered by a separate warranty meeting requirements established by the U.S. Environmental Protection Agency (EPA) and/or the California Air Resources Board (CARB). The hour limitations set forth above do not apply to the Emissions Control System Warranty. Refer to the Engine Emission Control Warranty Statement supplied with your product or contained in the engine manufacturer’s documentation.

Countries Other than the United States, Mexico, or Canada

Customers who have purchased Toro products exported from the United States, Mexico, or Canada should contact their Toro Distributor (Dealer) to obtain guarantee policies for your country, province, or state. If for any reason you are dissatisfied with your Distributor's service or have difficulty obtaining guarantee information, contact your Authorized Toro Service Center.

California Proposition 65 Warning Information

What is this warning?

You may see a product for sale that has a warning label like the following:

 **WARNING:** Cancer and Reproductive Harm—www.p65Warnings.ca.gov.

What is Prop 65?

Prop 65 applies to any company operating in California, selling products in California, or manufacturing products that may be sold in or brought into California. It mandates that the Governor of California maintain and publish a list of chemicals known to cause cancer, birth defects, and/or other reproductive harm. The list, which is updated annually, includes hundreds of chemicals found in many everyday items. The purpose of Prop 65 is to inform the public about exposure to these chemicals.

Prop 65 does not ban the sale of products containing these chemicals but instead requires warnings on any product, product packaging, or literature with the product. Moreover, a Prop 65 warning does not mean that a product is in violation of any product safety standards or requirements. In fact, the California government has clarified that a Prop 65 warning “is not the same as a regulatory decision that a product is ‘safe’ or ‘unsafe.’” Many of these chemicals have been used in everyday products for years without documented harm. For more information, go to https://oag.ca.gov/prop65/faqs-view-all.

A Prop 65 warning means that a company has either (1) evaluated the exposure and has concluded that it exceeds the “no significant risk level”; or (2) has chosen to provide a warning based on its understanding about the presence of a listed chemical without attempting to evaluate the exposure.

Does this law apply everywhere?

Prop 65 warnings are required under California law only. These warnings are seen throughout California in a wide range of settings, including but not limited to restaurants, grocery stores, hotels, schools, and hospitals, and on a wide variety of products. Additionally, some online and mail order retailers provide Prop 65 warnings on their websites or in catalogs.

How do the California warnings compare to federal limits?

Prop 65 standards are often more stringent than federal and international standards. There are various substances that require a Prop 65 warning at levels that are far lower than federal action limits. For example, the Prop 65 standard for warnings for lead is 0.5 µg/day, which is well below the federal and international standards.

Why don’t all similar products carry the warning?

- Products sold in California require Prop 65 labelling while similar products sold elsewhere do not.
- A company involved in a Prop 65 lawsuit reaching a settlement may be required to use Prop 65 warnings for its products, but other companies making similar products may have no such requirement.
- The enforcement of Prop 65 is inconsistent.
- Companies may elect not to provide warnings because they conclude that they are not required to do so under Prop 65; a lack of warnings for a product does not mean that the product is free of listed chemicals at similar levels.

Why does Toro include this warning?

Toro has chosen to provide consumers with as much information as possible so that they can make informed decisions about the products they buy and use. Toro provides warnings in certain cases based on its knowledge of the presence of one or more listed chemicals without evaluating the level of exposure, as not all the listed chemicals provide exposure limit requirements. While the exposure from Toro products may be negligible or well within the “no significant risk” range, out of an abundance of caution, Toro has elected to provide the Prop 65 warnings. Moreover, if Toro does not provide these warnings, it could be sued by the State of California or by private parties seeking to enforce Prop 65 and subject to substantial penalties.

Notes:


TORO