Form No. 3328-935

TORO®

48 cm Recycler®

Walk Power Lawn Mower

Model No. 20831—Serial No. 230000001 and Up
Model No. 20832—Serial No. 230000001 and Up

PROTOTYPE

Operator's Manual

CE

Original Instructions (GB)

This spark ignition system complies with Canadian ICES-002.

Ce système d'allumage par étincelle de véhicule est conforme à la norme NMB-002 du Canada.

Contents

	Page
Introduction	2
Safety	3
General Lawn Mower Safety	3
Sound Pressure	5
Sound Power	5
Vibration	5
Safety and Instruction Decals	6
Setup	6
Loose Parts	6
Installing the Handle	7
Installing the Starter Rope	7
Adjusting the Handle Height	7
Assembling the Grass Bag	8
Installing the Battery	8
Before Starting	8
Filling the Crankcase with Oil	8
Filling the Fuel Tank with Gasoline	9
Reviewing the Maintenance Schedule	10
Operation	10
Controls	10
Starting the Engine	10
Stopping the Engine	10
Using the Self-propel Drive	11
Adjusting the Cutting Height	11
Using the Grass Bag	12
Installing the Recycler Plug	12
Rear Discharge	12
Operating Tips	13
Maintenance	14
Recommended Maintenance Schedule	14
Checking the Engine Oil Level	15
Cleaning under the Housing	15
Cleaning the Discharge Tunnel and the Recycler Plug	16
Servicing the Air Filter	16
Servicing the Spark Plug	16
Adjusting the Self-propel Drive Cable	17
Lubricating the Self-propel Drive	17
Changing the Engine Oil	17
Maintaining the Blade	18
Cleaning Under the Belt Cover	20
Cleaning the Cooling System	20
Emptying the Fuel Tank	20
Charging the Battery	20
Disposing of the Battery	21
Replacing the Fuse	21
Folding the Handle	21
Storage	22
Preparing the Fuel System	22
Preparing the Engine	22
General Information	22
Removing From Storage	22
Troubleshooting	23

Introduction

Read this manual carefully to learn how to operate and maintain your product properly. The information in this manual can help you and others avoid injury and product damage. Although Toro designs and produces safe products, you are responsible for operating the product properly and safely.

Whenever you need service, genuine Toro parts, or additional information, contact an Authorized Service Dealer or Toro Customer Service and have the model and serial numbers of your product ready. Figure 1 illustrates the location of the model and serial numbers on the product.

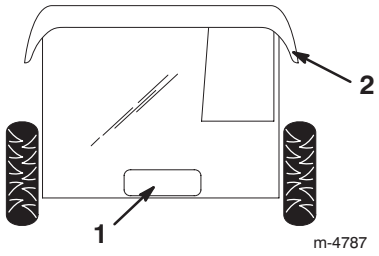

Figure 1

1. Location of the model and serial numbers
2. Rear door

PROTOTYPE

Write the product model and serial numbers in the space below:

Model No. _____

Serial No. _____

© 2002 by The Toro Company
8111 Lyndale Avenue South
Bloomington, MN 55420-1196

All Rights Reserved

Printed in the USA

This manual identifies potential hazards and has special safety messages that help you and others avoid personal injury and even death. ***Danger***, ***Warning***, and ***Caution*** are signal words used to identify the level of hazard. However, regardless of the hazard, be extremely careful.

Danger signals an extreme hazard that **will** cause serious injury or death if you do not follow the recommended precautions.

Warning signals a hazard that **may** cause serious injury or death if you do not follow the recommended precautions.

Caution signals a hazard that may cause minor or moderate injury if you do not follow the recommended precautions.

This manual uses 2 other words to highlight information. **Important** calls attention to special mechanical information and **Note:** emphasizes general information worthy of special attention.

Safety

Toro designed and tested this lawn mower to offer reasonably safe service; however, **failure to comply with the following instructions may result in personal injury.**

Warning

Engine exhaust contains carbon monoxide, an odorless, deadly poison that can kill you.

Do not run the engine indoors or in an enclosed area.

To ensure maximum safety, best performance, and to gain knowledge of the product, it is essential that you and any other operator of the lawn mower read and understand the contents of this manual before operating the lawn mower.

⚠ This is the safety alert symbol. It is used to alert you to potential personal injury hazards. Obey all safety messages that follow this symbol to avoid possible injury or death.

Improperly using or maintaining this lawn mower can result in injury. To reduce the potential for injury, comply with these safety instructions.

General Lawn Mower Safety

The following instructions have been adapted from the ANSI/OPEI standard B71.1—1998 and ISO standard 5395:1990(E). Information or terminology specific to Toro lawn mowers is enclosed in parenthesis.

This lawn mower is capable of amputating hands and feet and of throwing objects. Failure to observe the following safety instructions could result in serious injury or death.

Training

- Read this operator's manual carefully. Be thoroughly familiar with the controls and the proper use of the lawn mower before starting it.
- Never allow children to operate the lawn mower. Local regulations may restrict the age of the operator.
- Never allow adults unfamiliar with these instructions to operate the lawn mower.
- Never mow while people (especially children) or pets are nearby. Stop the lawn mower if anyone enters the area.
- Tragic accidents can occur if the operator is not alert to the presence of children. Children are often attracted to the lawn mower and the mowing activity. Never assume that children will remain where you last saw them.
- Keep children out of the mowing area and under the watchful care of a responsible adult.
- Be alert and turn the lawn mower off if children enter the area.
- Use extra care when approaching blind corners, shrubs, trees, or other objects that may obscure vision.
- Keep in mind that the operator or user is responsible for accidents or hazards occurring to other people or their property.
- See the manufacturer's instructions for proper operation and installation of accessories. Use only the accessories that are approved by the manufacturer.

Preparation

- Thoroughly inspect the area where you will use the lawn mower, and remove all stones, sticks, wires, bones, and other foreign objects.
- While mowing, always wear substantial footwear and long trousers.
- Do not operate the lawn mower when barefoot or wearing open sandals.
- Always wear safety goggles or safety glasses with side shields when operating the lawn mower.
- Warning: Gasoline is highly flammable. Take the following precautions:
  - Store fuel in containers specifically designed for this purpose.

PROTOTYPE

  - Refuel outdoors only and do not smoke while refuelling.
  - Add fuel before starting the engine. Never remove the cap of the fuel tank or add gasoline while the engine is running or when the engine is hot.
  - If gasoline is spilled, do not attempt to start the engine. Move the lawn mower away from the area of spillage to avoid creating any source of ignition until the gasoline vapors have dissipated.
  - Replace all fuel tank and container caps securely.
  - If you must drain the fuel from the fuel tank, do it outdoors.
- Replace faulty mufflers.
- Before using, always visually inspect the blades, blade bolts, and cutter assembly for wear or damage. Replace worn or damaged blades and bolts in sets to preserve balance.
- On multibladed lawn mowers, use care as rotating one blade can cause the other blades to rotate.

Operation

- Do not operate the engine in a confined space where dangerous carbon monoxide fumes can collect.
- Mow only in daylight or in good artificial light.
- Always be sure of your footing on slopes.
- Walk; never run.
- Keep a firm hold on the handle.
- For wheeled rotary lawn mowers, mow across the face of slopes, never up and down.
- Exercise extreme caution when changing the direction on slopes.
- Do not mow excessively steep slopes.
- Use extreme caution when reversing or pulling the lawn mower toward you.
- Before and while moving backward, look behind and down for small children.
- Stop the blade(s) if you must tilt the lawn mower for transportation when crossing surfaces other than grass and when transporting the lawn mower to and from the area to be mowed.
- Never operate the lawn mower with damaged or missing guards or shields, or without safety devices (such as deflectors and grass catchers) in place.
- Do not change the speed settings on the engine.
- Disengage all blade and drive clutches before starting the engine.
- Start the engine carefully according to instructions and with feet well away from the blade(s).
- Do not tilt the lawn mower when starting the engine, unless you must tilt the lawn mower to start it. In this case, do not tilt it more than absolutely necessary and lift only the part which is away from the operator.
- Do not start the engine when standing in front of the discharge chute.
- Do not put your hands or feet near or under rotating parts. Keep clear of the discharge opening at all times.
- Never pick up or carry a lawn mower while the engine is running.
- Stop the engine and disconnect the spark-plug wire:
  - before clearing blockages or unclogging the chute;
  - before checking, cleaning, or working on the lawn mower;
  - after striking a foreign object. Inspect the lawn mower for damage and make repairs before starting and operating the lawn mower; and
  - if the lawn mower starts to vibrate abnormally (check it immediately).
- Stop the engine:
  - whenever you leave the lawn mower; and
  - before refuelling.
- Reduce the throttle setting during engine run-out and, if the engine has a shutoff valve, turn the fuel off after mowing.
- Stop the blade(s) when crossing gravel drives, walks, or roads.
- Shut the engine off and wait until the blade comes to a complete stop before removing the grass catcher.
- Do not operate the lawn mower while under the influence of alcohol or drugs.
- If the lawn mower should start to vibrate abnormally, stop the engine and check immediately for the cause. Vibration is generally a warning of trouble.

Slopes are a major factor related to slip and fall accidents which can result in a severe injury. If you feel uneasy on a slope, do not mow it.

- Watch for holes, ruts, or bumps. Tall grass can hide obstacles.
- Do not mow near drop-offs, ditches, or embankments. You could lose your footing or balance.

PROTOTYPE

- Do not mow on wet grass. Reduced footing could cause slipping.

Maintenance and Storage

- Keep all nuts, bolts (especially blade attachment bolts), and screws tight to ensure that the lawn mower is in safe working condition.
- Never store the lawn mower with gasoline in the tank inside a building where fumes may reach an open flame or spark.
- Allow the engine to cool before storing the lawn mower in any enclosure.
- To reduce the fire hazard, keep the engine, muffler, battery compartment, and gasoline storage area free of grass, leaves, or excessive grease.
- Check the grass catcher frequently for wear or deterioration.
- Replace worn or damaged parts.
- Use extra care when handling gasoline; gasoline vapors are explosive.
- Never tamper with safety devices. Check their proper operation regularly.
- Keep the lawn mower free of grass, leaves, or other debris buildup. Clean up any oil or fuel that spills.
- Stop and inspect the lawn mower if you strike an object. Repair the lawn mower, if necessary, before starting the engine.
- Never attempt to make wheel height adjustments while the engine is running.
- Grass catcher components are subject to wear, damage, and deterioration, which could expose moving parts or allow objects to be thrown. Frequently check the components and replace them with the manufacturer's recommended parts when necessary.
- Lawn mower blades are sharp and can cut. Wrap the blade(s) or wear gloves, and use extra caution when servicing them.
- Do not change the speed settings on the engine.
- If you must drain the fuel from the fuel tank, do it outdoors.
- To ensure the best performance and safety, purchase only genuine Toro replacement parts and accessories.
- Maintain or replace safety and instruction decals when necessary.

Sound Pressure

This unit has a maximum sound pressure level at the operator's ear of 84 dBA, based on measurements of identical machines per Directive 98/37/EC.

Sound Power

This unit has a guaranteed sound power level of 95 dBA, based on measurements of identical machines per Directive 2000/14/EC.

Vibration

This unit does not exceed a hand/arm vibration level of 5.5 m/s^2, based on measurements of identical machines per Directive 98/37/EC.

PROTOTYPE

Safety and Instruction Decals

Safety decals and instructions are easily visible to the operator and are located near any area of potential danger. Replace any decal that is damaged or lost.



93-4105

1. Warning—read the *Operator's Manual.*
2. Thrown object hazard—keep bystanders a safe distance from the machine.
3. Thrown object hazard, mower—keep the deflector in place.
4. Cutting/dismemberment hazard of hand or foot, mower blade—stay away from moving parts.
5. Warning—stop the engine before leaving the machine.

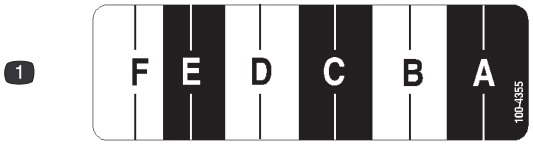

100-4355

1. Cutting height settings

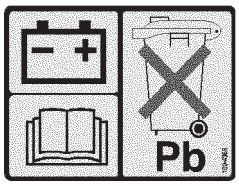

100-4369

1. Battery—read the *Operator's Manual.*
2. Contains lead; do not discard.

Setup

Note: Determine the left and right sides of the machine from the normal operating position.

Loose Parts

DESCRIPTION	QTY.	USE
Upper handle section	1	
Oval-head bolts	2	Installing the handle
Handle knobs	2	
Battery (electric-start model only)	1	Starting the engine
Ignition key (electric-start model only)	1	Starting and stopping the engine

PROTOTYPE

Installing the Handle

Warning

Folding or unfolding the handle improperly can pinch, stretch, or damage one or more of the cables. Any pinched, stretched, or damaged cable may cause an operational failure that results in an unsafe operating condition.

- **Do not pinch, stretch, or damage the cables.**
- **Handle the cables with care when folding or unfolding the handle.**
- **Do not use the lawn mower if one or more of the cables are pinched, stretched, or damaged. Contact an Authorized Service Dealer.**

1. Lay the upper handle on the ground behind the lawn mower with the handle label facing up.
2. Loosen the handle height adjustment knobs and rotate the lower handle toward the rear of the lawn mower until it seats into one of the handle height settings as shown in Figure 2.

   Note: To set the handle height, refer to Adjusting the Handle Height on page 7.

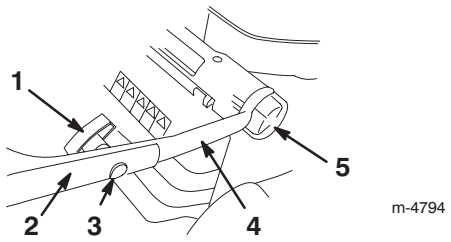

Figure 2

1. Handle knob (2)
2. Upper handle section
3. Oval-head bolt (2)
4. Lower handle section
5. Handle height adjustment knob (2)

3. Remove the handle knobs and the oval-head bolts from the upper handle section.
4. Install the upper handle section onto the lower handle section with the oval-head bolts and the handle knobs as shown in Figure 2. **Tighten the handle knobs securely.**

Note: Ensure that the cables and the electrical jacket are routed as illustrated in Figure 3.

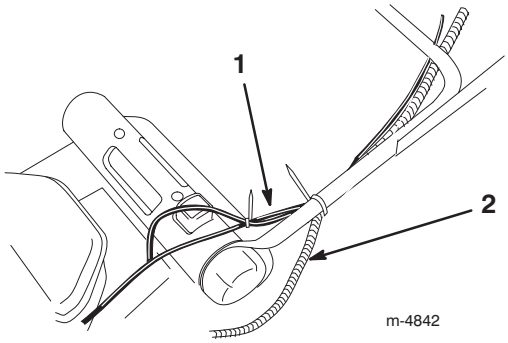

Figure 3

1. Cables
2. Electrical jacket

Installing the Starter Rope

Pull the starter rope through the rope guide on the handle (Fig. 4).

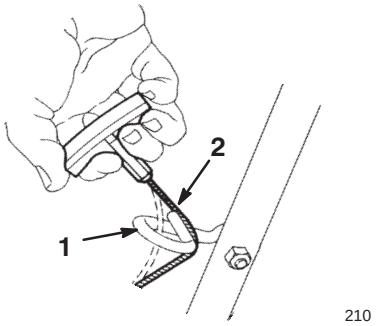

Figure 4

1. Rope guide
2. Starter rope

Adjusting the Handle Height

PROTOTYPE

You can set the handle to 3 height settings: high, medium, and low (Fig. 2). Select the handle height setting most comfortable for you.

1. Loosen the handle height adjustment knobs.
2. Set the handle to the desired position.
3. Tighten the handle height adjustment knobs.

Assembling the Grass Bag

1. Attach the two side channels of the grass bag to the grass bag frame as shown in Figure 5.

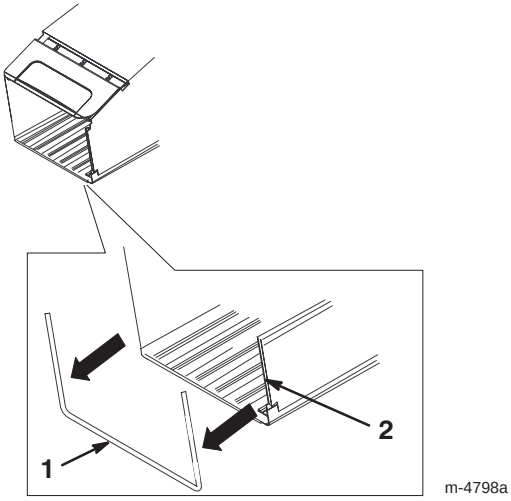

Figure 5

1. Grass bag frame
2. Side channel (2)

Note: Start on one end of the channel and push it onto the frame.

2. Ensure that the sides of the bag base are **inside** the bag frame as shown in Figure 6.

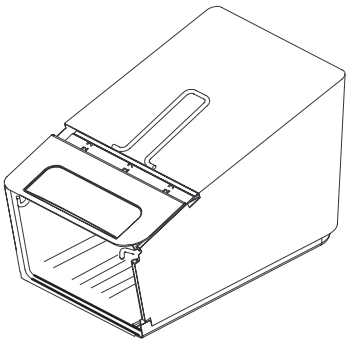

Figure 6

Installing the Battery

Electric-start Model only

1. Charge the battery. Refer to Charging the Battery on page 20.
2. Align the pins in the battery case with the holes in the battery bar, and lower the pins into the holes until the battery case snaps into place (Fig. 7).

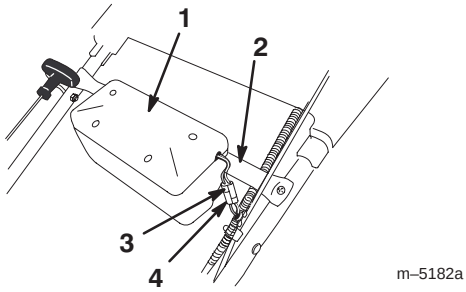

Figure 7

1. Battery case
2. Battery bar
3. Wire lead from battery
4. Wire lead from harness

3. Connect the wire lead from the battery to the wire lead from the electrical wire harness in the corrugated tube (Fig. 7).

Before Starting

Filling the Crankcase with Oil

The crankcase can hold 22 ounces (0.65 liters) of oil. Use only high-quality, SAE 30 or SAE 10W30 weight detergent oil that has the American Petroleum Institute (API) service classification SF, SG, SH, or SJ.

Before each use, ensure that the oil level is between the Add and the Full marks on the dipstick (Fig. 8).

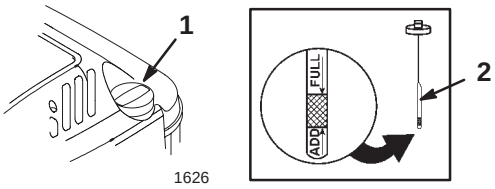

Figure 8

1. Oil fill cap
2. Dipstick

PROTOTYPE

To add oil:

1. Move the lawn mower to a level surface.
2. Clean around the dipstick (Fig. 8).
3. Remove the dipstick by rotating the cap counterclockwise and pulling it out.
4. Wipe the dipstick clean with a clean cloth.
5. Fully insert the dipstick into the filler neck, then remove it.

Note: To ensure an accurate oil level reading, you must fully install the dipstick.

6. Read the oil level on the dipstick (Fig. 8).

7. If the oil level reading is below the Add mark on the dipstick, **slowly** pour only enough oil into the filler hole to raise the oil level to the Full mark on the dipstick.

Important Do not overfill the crankcase with oil and run the engine; engine damage will result. Drain the excess oil until the oil level on the dipstick reads Full.

8. Insert the dipstick into the filler neck and rotate the cap clockwise until it is tight.

Filling the Fuel Tank with Gasoline

For best results, use clean, fresh, lead-free gasoline with an octane rating of 87 or higher. To ensure freshness, purchase only the quantity of gasoline that you expect to use in 30 days. Unleaded gasoline burns cleaner, extends engine life, and promotes good starting. You may use leaded gasoline if unleaded gasoline is not available.

Important Do not add oil to the gasoline.

Important Do not use methanol, gasoline containing methanol, gasohol containing more than 10% ethanol, premium gasoline, or white gas. Using these fuels can damage the engine's fuel system.

Important Do not use gasoline that is more than 30 days old.

Danger

In certain conditions, gasoline is extremely flammable and highly explosive. A fire or explosion from gasoline can burn you and others and can damage property.

- **Fill the fuel tank outdoors, in an open area, and when the engine is cold. Wipe up any gasoline that spills.**
- **Do not fill the fuel tank completely full. Add gasoline to the fuel tank until the level is 1/4 to 1/2 in. (6 to 13 mm) below the bottom of the filler neck. This empty space in the tank allows the gasoline to expand.**
- **Never smoke when handling gasoline, and stay away from an open flame or where a spark may ignite the gasoline fumes.**
- **Store gasoline in an approved fuel container and keep it out of the reach of children.**
- **Never buy more than a 30-day supply of gasoline.**

Danger

When fueling, under certain circumstances, a static charge can develop, igniting the gasoline. A fire or explosion from gasoline can burn you and others and damage property.

- **Always place gasoline containers on the ground and away from your vehicle before filling.**
- **Do not fill gasoline containers inside a vehicle or on a truck or trailer bed because interior carpets or plastic truck bed liners may insulate the container and slow the loss of any static charge.**
- **When practical, remove gasoline-powered equipment from the truck or trailer and refuel the equipment with its wheels on the round.**
- **If this is not possible, then refuel such equipment on a truck or trailer from a portable container, not from a gasoline dispenser nozzle.**
- **If you must use a gasoline dispenser nozzle, keep the nozzle in contact with the rim of the fuel tank or container opening at all times until fueling is complete.**

Use a fuel stabilizer/conditioner regularly during operation and storage. A stabilizer/conditioner cleans the engine during operation and prevents gum-like varnish deposits from forming in the engine during periods of storage.

Important Do not use fuel additives other than a fuel stabilizer/conditioner. Do not use fuel stabilizers with an alcohol base such as ethanol, methanol, or isopropanol.

1. Clean around the fuel tank cap (Fig. 9).

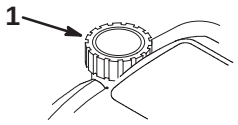

1626

Figure 9

1. Fuel tank cap

PROTOTYPE

2. Remove the cap from the tank.
3. Fill the fuel tank with unleaded gasoline to within 1/4 to 1/2 inch (6 to 13 mm) from the top of the tank. **Do not fill into the filler neck.**
4. Install the fuel tank cap and wipe up any spilled gasoline.

Reviewing the Maintenance Schedule

Review the Recommended Maintenance Schedule on page 14. You may need to perform one or more additional procedures before or soon after you begin operating the lawn mower.

Operation

Note: Determine the left and right sides of the machine from the normal operating position.

Each time before you mow, ensure that the self-propel drive (self-propel model only) and the blade control bail operate properly. When you release the blade control bail, the engine and the self-propel drive should stop. If they do not, contact an Authorized Service Dealer.

Controls

The starter handle and the blade control bail are on the upper handle as shown in Figure 10.

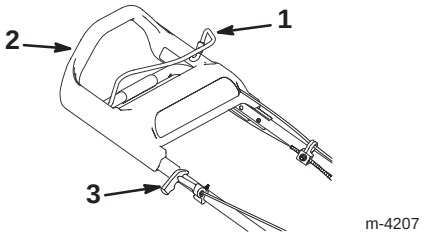

Figure 10

1. Blade control bail
2. Upper handle
3. Starter handle

Starting the Engine

1. Connect the wire to the spark plug (Fig. 11).

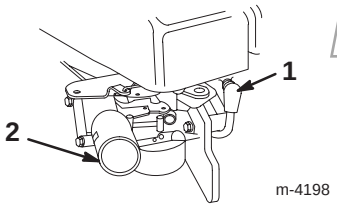

Figure 11

1. Spark-plug wire
2. Primer

2. Push in the primer 3 times, waiting one second between each push (Fig. 11).

Note: If the temperature is 55°F (13°C) or below, push in the primer 5 times, waiting one second between each push.

Note: Do not use the primer to start a warm engine after a brief shutdown. However, cool weather may require you to prime the engine again.

3. Hold the blade control bail against the upper handle (Fig. 12).

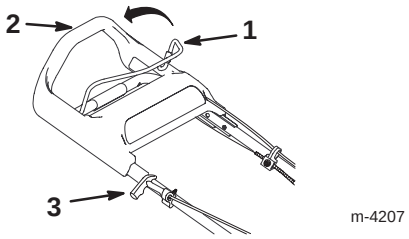

Figure 12

1. Blade control bail
2. Upper handle
3. Starter handle

4. Start the lawn mower.

- **Manual Starting**—Pull the starter handle lightly until you feel resistance, then pull it sharply (Fig. 10). Allow the rope to return to the handle slowly.
- **Electric Starting** (electric-start model only)—Insert the key into the switch, turn the key to the right, and release it when the engine starts (Fig. 13).

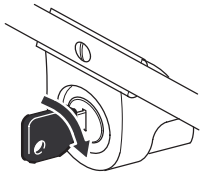

Figure 13

Note: If the battery is too low to start the engine, start the engine manually.

Note: If the engine fails to start after 3 attempts, repeat steps 2 through 4.

PROTOTYPE

Stopping the Engine

Release the blade control bail. Both the engine and the blade should stop. If they do not stop properly, contact an Authorized Service Dealer.

Using the Self-propel Drive

To operate the self-propel drive, simply walk forward with your hands on the upper handle and your elbows at your sides, and the lawn mower will automatically keep pace with you. The faster you walk, the farther the handle will slide and the faster the lawn mower will propel (Fig. 14).

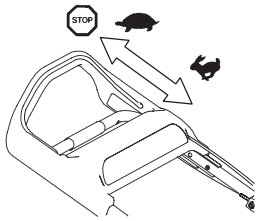

m-4206

Figure 14

To slow down the drive, simply slow your walking speed; to stop the drive, stop walking (Fig. 14).

Note: If, when backing up after self-propelling, the lawn mower does not roll backward freely, nudge the lawn mower forward about an inch without engaging the self-propel drive, then pull the lawn mower backward.

Adjusting the Cutting Height

The SmartWheel™ has 2 cutting scales: Sparse/Normal and Lush—to ensure the best cutting height setting in any mowing condition (Fig. 15). Use the Sparse/Normal scale during the warm summer season for the majority of your mowing. The Lush scale is for thick, moist, and succulent grass that grows most often in the spring.

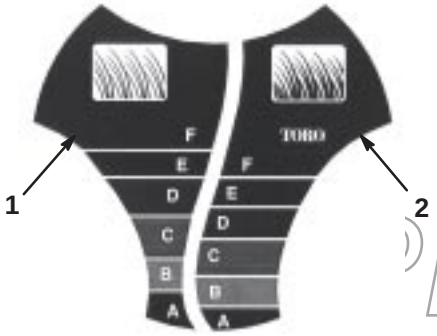

Figure 15

1. Sparse/normal grass cutting scale
2. Lush grass cutting scale

Toro recommends the following:

- Cut the grass at the D, E, or F settings or keep the grass between 2 to 3 inches (5.1 to 7.6 cm) high.
- Do not cut below the D setting unless the grass is sparse or it is late fall when grass growth begins to slow down. When you cut long grass, use a higher cutting height setting and walk slower; then cut the grass again at a normal setting. Mowing the grass when it is too long can plug the lawn mower and cause the engine to stall.

Note: The SmartWheel calculates the proper setting to ensure that you cut no more than a third of the grass blade.

1. Stop the engine and wait for all moving parts to stop.
2. Move the lawn mower into the grass; stop moving the lawn mower when the SmartWheel design on one of the rear wheels is upright (Fig. 15).
3. Use the SmartWheel design to compare the tips of the grass blades to the letters on the wheel. The letter on the SmartWheel that matches the tips of the grass blades is the proper cutting height.
4. Press down on the red button and hold the cutting height adjustment handle to move the cutting height up or down (Fig. 16).

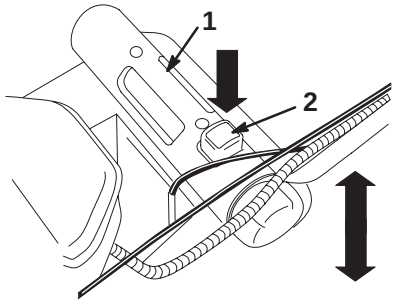

m-4781

Figure 16

1. Cutting height adjustment handle
2. Red button

5. Lift up or press down on the handle, and use the pointer and the cutting height setting on the link rod to set the lawn mower to the desired cutting height (Fig. 17).

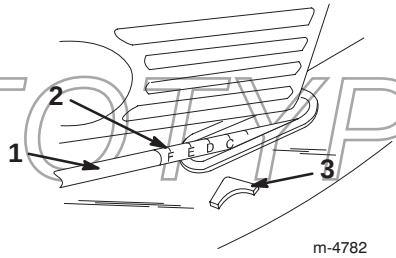

m-4782

Figure 17

1. Link rod
2. Cutting height setting
3. Pointer

PROTOTYPE

Using the Grass Bag

Occasionally, you may want to use the grass bag for bagging lush grass or collecting leaves.

Installing the Grass Bag

1. Stop the engine and wait for all moving parts to stop.
2. Open the rear door (Fig. 1).
3. Hold the spring-loaded rear door up to prevent it from closing.
4. Remove the recycler plug.
5. Hang the grass bag frame pins onto the hooks as shown in Figure 18.

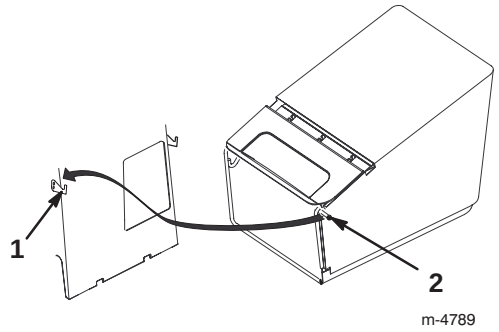

Figure 18

1. Hook (2)
2. Grass bag frame pin (2)

6. Release the rear door.

Mowing with the Grass Bag

Warning

A worn grass bag could allow small stones and other similar debris to be thrown in the operator's or bystander's direction and result in serious personal injury or death to the operator or bystanders.

Check the grass bag frequently. If it is damaged, install a new Toro replacement bag.

Cut the grass until the bag is full.

Important Do not overfill the bag.

Removing the Grass Bag

1. Stop the engine and wait for all moving parts to stop.

Danger

If the rear door does not close completely, the lawn mower could throw objects, causing serious personal injury or death.

If you cannot close the rear door because the grass clippings clog the discharge area, stop the engine, wait for all moving parts to stop, and remove the grass clippings (with a stick, not your hand) until the rear door closes completely.

2. Open the rear door (Fig. 1).
3. Hold the spring-loaded rear door up to prevent it from closing while you remove the grass bag.
4. Lift the grass bag frame pins off the hooks and out of the opening as shown in Figure 18.

Installing the Recycler Plug

1. Stop the engine and wait for all moving parts to stop.
2. Open the rear door (Fig. 1).
3. Hold the spring-loaded rear door up to prevent it from closing.
4. Insert the recycler plug into the opening as shown in Figure 19.

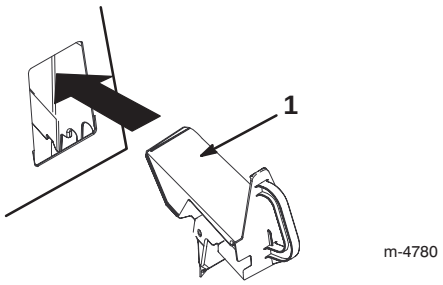

Figure 19

1. Recycler plug

5. Release the rear door.

Rear Discharge

Occasionally, you may need to cut the lawn without the grass bag or the recycler plug when the grass is too long for bagging.

To use the rear discharge feature, remove the recycler plug or the grass bag (refer to Removing the Grass Bag on page 12), and close the rear door.

PROTOTYPE

Danger

If the rear door does not close completely, the lawn mower could throw objects, causing serious personal injury or death.

If you cannot close the rear door because the grass clippings clog the discharge area, stop the engine, wait for all moving parts to stop, and remove the grass clippings (with a stick, not your hand) until the rear door closes completely.

Operating Tips

- Review the safety instructions and read this manual carefully before operating the lawn mower.
- Clear the area of sticks, stones, wire, branches, and other debris that the blade could hit and throw.
- Keep everyone, especially children and pets, away from the area of operation.
- Avoid striking trees, walls, curbs, or other solid objects. Never deliberately mow over any object.
- If the lawn mower strikes an object or starts to vibrate, immediately stop the engine, disconnect the wire from the spark plug, and examine the lawn mower for damage.
- Maintain a **sharp blade** throughout the cutting season. Periodically file down nicks on the blade.
- Replace the blade when necessary with an original Toro replacement blade.
- Mow only dry grass or leaves. Wet grass and leaves tend to clump on the yard and can cause the lawn mower to plug or the engine to stall.

Warning

Wet grass or leaves can cause you to slip and contact the blade, resulting in serious injury.

Mow only in dry conditions.

- Clean under the housing after each mowing. See Cleaning under the Housing on page 15.
- Keep the engine in good running condition.
- Set the engine speed to the fastest position for the best cutting results.

Warning

Operating a lawn mower with its engine running at a speed greater than the factory setting can cause the lawn mower to throw a part of the blade or engine into the operator's or bystander's area and result in serious personal injury or death.

- **Do not change the engine speed setting.**
- **If you suspect the engine speed is faster than normal, contact an Authorized Service Dealer.**

- Clean the air filter frequently. Recycling stirs up more clippings and dust which clogs the air filter and reduces engine performance.

Cutting Grass

- Grass grows at different rates at different times of the year. In the summer heat, it is best to cut grass at the C, D, or E cutting height settings. Cut only about a third of the grass blade at a time. Do not cut below the C setting unless the grass is sparse or it is late fall when grass growth begins to slow down.
- When cutting grass over 6 inches (15 cm) tall, first mow at the highest cutting height setting and walk slower; then mow again at a lower setting for the best lawn appearance. If the grass is too long and the leaves clump on top of the lawn, the lawn mower may plug and cause the engine to stall.
- Alternate the mowing direction. This helps disperse the clippings over the lawn for even fertilization.

If the finished lawn appearance is unsatisfactory, try one or more of the following:

- Sharpen the blade.
- Walk at a slower pace while mowing.
- Raise the cutting height on your lawn mower.
- Cut the grass more frequently.
- Overlap cutting swaths instead of cutting a full swath with each pass.

PROTOTYPE

Cutting Leaves

- After cutting the lawn, ensure that half of the lawn shows through the cut leaf cover. You may need to make more than one pass over the leaves.
- Slow down your mowing speed if the lawn mower does not cut the leaves finely enough.
- If you mow over oak leaves, you can add lime to the grass in the spring to reduce the acidity of the oak leaves.

Maintenance

Note: Determine the left and right sides of the machine from the normal operating position.

Recommended Maintenance Schedule

Maintenance Service Interval	Maintenance Procedure
Each Use	• Check the engine oil level. Refer to Checking the Engine Oil Level on page 15. • Check the stopping time of the blade brake. The blade must stop within 3 seconds of releasing the bail; if it does not, contact an Authorized Service Dealer for repair. • Remove grass clippings and dirt from under the housing. Refer to Cleaning under the Housing on page 15. • Clean the discharge tunnel and the recycler plug. Refer to Cleaning the Discharge Tunnel and the Recycler Plug on page 16.
5 Hours	• Check the blade and the engine mounting fasteners. Tighten them if they are loose.
25 Hours	• Clean the air filter pre-cleaner, and replace the paper air filter; replace the paper air filter more frequently in dusty or dirty operating conditions. Refer to Servicing the Air Filter on page 16. • Inspect the spark plug and replace it if necessary. Refer to Servicing the Spark Plug on page 16. • Adjust the self-propel drive cable and grease the rear axle fittings. Refer to Adjusting the Self-propel Drive Cable on page 17 and to Lubricating the Self-propel Drive on page 17.
50 Hours	• Change the engine oil.[1,2] Refer to Changing the Engine Oil on page 17. • Sharpen or replace the blade; maintain it more frequently if the edge dulls quickly in rough or in sandy conditions. Refer to Maintaining the Blade on page 18. • Check for leaks in the fuel system and/or a deteriorating fuel hose. Replace parts if necessary. • Remove grass clippings and debris from under the belt cover. Refer to Cleaning under the Belt Cover on page 20.
100 Hours	• Clean the cooling system. Refer to Cleaning the Cooling System on page 20.
Storage	• Empty the fuel tank before repairs as directed or before storage. Refer to Emptying the Fuel Tank on page 20. • Charge the battery as directed or before storage (electric-start model only). Charge the battery after extended storage. Replace the battery when necessary. Refer to Charging the Battery on page 20.

PROTOTYPE

[1]Change the engine oil after the first 5 operating hours.

[2]Change the engine oil after every 25 operating hours in dusty conditions or in high temperatures.

Important Refer to your engine operator's manual for additional maintenance procedures.

Caution

If you leave the wire on the spark plug, someone could accidently start the engine and seriously injure you or other bystanders.

Disconnect the wire from the spark plug before you do any maintenance. Set the wire aside so that it does not accidentally contact the spark plug.

Checking the Engine Oil Level

Before you use the lawn mower, ensure that the oil level is between the Add and the Full marks as shown on the dipstick (Fig. 8). If the oil level is below the Add mark, add oil. Refer to Filling the Crankcase with Oil on page 8.

Cleaning under the Housing

Keep the underside of the housing clean. Be especially careful to keep the kickers free of debris (Fig. 20).

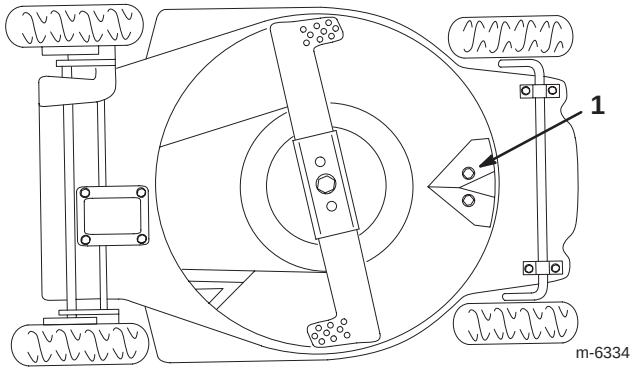

Figure 20

1. Kicker plate

Washing Method

1. Move the lawn mower onto a flat paved surface near a water hose.

2. Attach a quick-disconnect coupling (sold separately) to the end of the water hose.

3. Lift the rear door and attach the coupling to the lawn mower washout fitting on the recycling plug (Fig. 21).

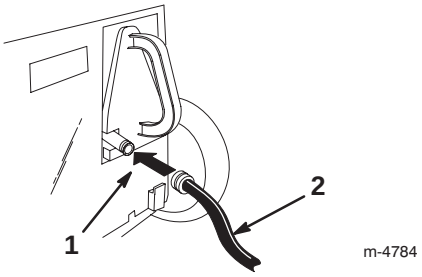

Figure 21

1. Washout fitting
2. Hose

4. Turn the water on high.

5. Start the engine.

6. Let the lawn mower run for 2 minutes.

7. Stop the engine and wait for all moving parts to stop.

8. Turn the water off.

9. Remove the coupling from the washout fitting.

10. Move the lawn mower to a dry area, and let the engine run for one minute to dry out the lawn mower and its components.

11. Stop the engine and wait for all moving parts to stop.

If the underside of the housing has excessive grass buildup, wait 30 minutes and repeat steps 2 through 11 above.

Warning

A broken or missing washout fitting could expose you and others to thrown objects or to the blade, causing injury or death.

- **Replace a broken or missing washout fitting immediately before using the lawn mower again.**
- **Plug any hole(s) in the lawn mower with bolts and locknuts.**
- **Never put your hands or feet under the lawn mower or through openings in the lawn mower.**

PROTOTYPE

Scraping Method

Warning

Tipping the lawn mower may cause the fuel to leak from the carburetor or the fuel tank. Gasoline is extremely flammable, highly explosive and under certain conditions can cause personal injury or property damage.

Avoid fuel spills by running the engine dry or removing gasoline with a hand pump; never siphon.

If washing does not remove all the debris from under the housing, tip the lawn mower and scrape it clean.

1. Remove the grass bag.
2. Disconnect the wire from the spark plug (Fig. 11).
3. Drain the gasoline from the fuel tank; refer to steps 3 and 4 of Emptying the Fuel Tank on page 20.
4. Tip the lawn mower onto its **left** side (Fig. 20).
5. Remove the dirt and grass clippings with a hardwood or plastic scraper. Avoid burrs and sharp edges.

Important Move the blade as little as possible to avoid future starting problems.

6. Turn the lawn mower upright.
7. Connect the wire to the spark plug.

Cleaning the Discharge Tunnel and the Recycler Plug

To ensure the best performance, clean the discharge tunnel and the recycler plug after each use. When the grass is thick and lush, clippings may collect on and around the recycler plug, making it difficult to remove.

Servicing the Air Filter

Clean the pre-cleaner and replace the air filter once every season or every 25 operating hours; replace it more frequently in dusty operating conditions.

Important Do not operate the engine without the air filter element; extreme engine damage will occur.

1. Stop the engine and wait for all moving parts to stop.
2. Disconnect the wire from the spark plug (Fig. 11).
3. Remove the screws that secure the air cleaner cover (Fig. 22).

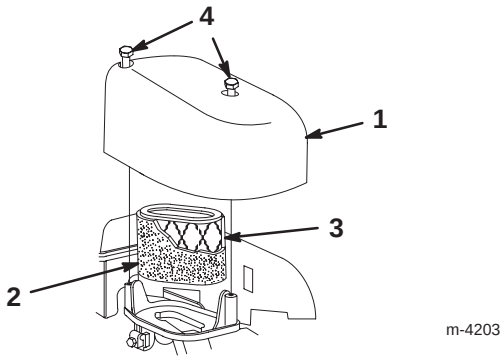

Figure 22

1. Cover
2. Foam pre-cleaner
3. Air filter
4. Screws

4. Remove the cover and clean it thoroughly (Fig. 22).
5. Remove the foam pre-cleaner.
6. Wash the pre-cleaner with a mild detergent and water, then blot it dry (Fig. 22).
7. Remove the paper air filter and discard it (Fig. 22).

Important Do not try to clean a paper air filter.

8. Insert the new paper air filter into the foam pre-cleaner (Fig. 22).
9. Install the new air filter (Fig. 22).
10. Install the cover (Fig. 22).

Servicing the Spark Plug

Check the spark plug after every 25 operating hours. Use a **Champion RC12YC** spark plug or equivalent.

1. Stop the engine and wait for all moving parts to stop.
2. Disconnect the wire from the spark plug (Fig. 11).
3. Clean around the spark plug and remove it from the cylinder head.

Important Replace a cracked, fouled, or dirty spark plug. Do not clean the electrodes because grit entering the cylinder could damage the engine.

PROTOTYPE

4. Set the gap on the new plug to 0.020 in. (0.50 mm) (Fig. 23).

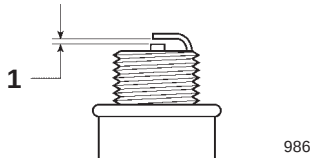

Figure 23

1. 0.020 in. (0.50 mm)

5. Install the spark plug and the gasket seal.
6. Torque the spark plug to 15 ft-lb (20 N·m).
7. Connect the wire to the spark plug.

Adjusting the Self-propel Drive Cable

If the top speed begins to slow on the lawn mower, adjust the self-propel drive cable.

1. Stop the engine and wait for all moving parts to stop.
2. Pull the upper handle back as far as possible.
3. Loosen the cable support nut (Fig. 24).

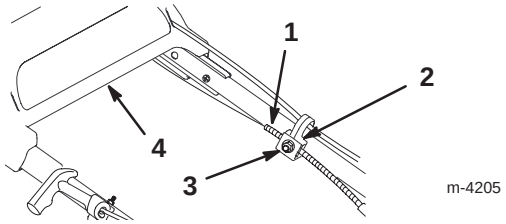

Figure 24

1. Cable jacket
2. Cable support
3. Nut
4. Upper handle

4. Remove the belt cover.
5. Push the belt guide tab down until it contacts the lawn mower, then hold it in place (Fig. 25).

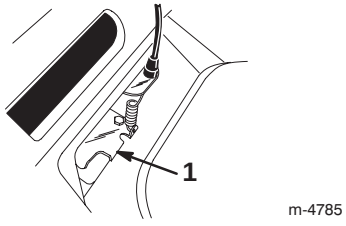

Figure 25

1. Belt guide tab

6. Pull the cable jacket down (toward the lawn mower) to remove all the slack in the cable (Fig. 24).
7. While holding the cable jacket down, release the drive bracket and tighten the nut on the cable support (Fig. 24).
8. Install the belt cover.

Lubricating the Self-propel Drive

After every 25 operating hours or at the end of the season, lubricate the rear wheels.

1. Wipe the grease fittings with a clean rag (Fig. 26).

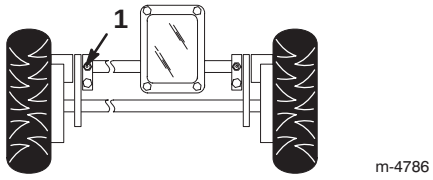

Figure 26

1. Grease fitting (2)

2. Install a grease gun onto each fitting and gently apply 2 or 3 pumps of #2 multi-purpose lithium base grease.

Important Applying grease using excess pressure may damage the seals.

Changing the Engine Oil

Change the oil after the first 5 operating hours and then after every 50 operating hours or every season. Run the engine just before changing the oil to warm the oil. Warm oil flows better and carries more contaminants.

Note: Change the oil after every 25 operating hours when operating under a heavy load or in high temperatures.

PROTOTYPE

Draining the Oil above the Housing (Preferred Method)

1. Remove the grass bag.
2. Disconnect the wire from the spark plug (Fig. 11).
3. Drain the gasoline from the fuel tank; refer to steps 3 and 4 of Emptying the Fuel Tank on page 20.
4. Remove the dipstick from oil fill tube and place a drain pan next to the **left** side of the lawn mower.

5. Tip the lawn mower onto its **left** side, allowing the oil to drain into the drain pan (Fig. 27).

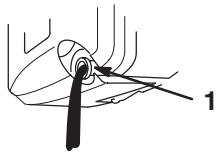

Figure 27

1. Oil fill tube

6. Turn the lawn mower upright.
7. Fill the crankcase with fresh oil to the Full mark on the dipstick. Refer to Filling the Crankcase with Oil on page 8.
8. Install the dipstick.
9. Wipe up any spilled oil.
10. Connect the wire to the spark plug.
11. Recycle the used oil according to local codes.

Draining the Oil below the Housing (Optional Method)

Note: You will need a 3/8-inch ratchet extension to perform this procedure.

Warning

The blade is sharp; contacting the blade can result in serious personal injury.

Wear gloves or wrap the sharp edges of the blade with a rag.

1. Disconnect the wire from the spark plug (Fig. 11).
2. Drain the gasoline from the fuel tank; refer to steps 3 and 4 of Emptying the Fuel Tank on page 20.
3. Tip the lawn mower onto its **left** side and secure it to prevent it from falling.
4. Place a drain pan under the lawn mower.
5. Remove the oil drain plug, return the lawn mower to its operating position, and allow the oil to drain into the drain pan (Fig 28).

Note: Avoid spilling the oil on the belt.

Important You may need to move the blade to get to the oil drain plug. Move the blade as little as possible to avoid future starting problems.

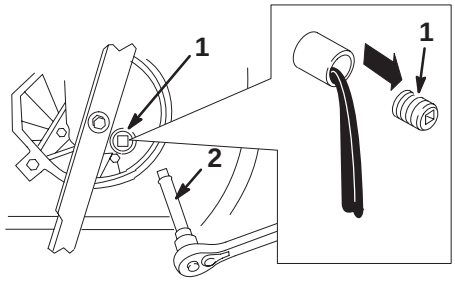

Figure 28

1. Oil drain plug
2. 3/8-inch Ratchet extension

6. Tip the lawn mower onto its **left** side and install the oil drain plug.
7. Move the oil drain pan from under the lawn mower and turn the lawn mower upright.
8. Fill the crankcase with fresh oil to the Full mark on the dipstick. Refer to Filling the Crankcase with Oil on page 8.
9. Install the dipstick.
10. Wipe up any spilled oil.
11. Connect the wire to the spark plug.
12. Recycle the used oil according to local codes.

Maintaining the Blade

A straight, sharp blade provides the best cutting performance. Regularly inspect and sharpen the blade.

Warning

The blade is sharp; contacting the blade can result in serious personal injury.

Wear gloves or wrap the sharp edges of the blade with a rag.

1. Stop the engine and wait for all moving parts to stop.
2. Disconnect the wire from the spark plug (Fig. 11).

PROTOTYPE

Warning

Tipping the lawn mower may cause the fuel to leak from the carburetor or the fuel tank. Gasoline is extremely flammable, highly explosive and under certain conditions can cause personal injury or property damage.

Avoid fuel spills by running the engine dry or removing gasoline with a hand pump; never siphon.

3. Drain the gasoline from the fuel tank; refer to steps 3 and 4 of Emptying the Fuel Tank on page 20.

4. Tip the lawn mower on its **left** side (Fig. 29).

Important Move the blade as little as possible to avoid future staring problems.

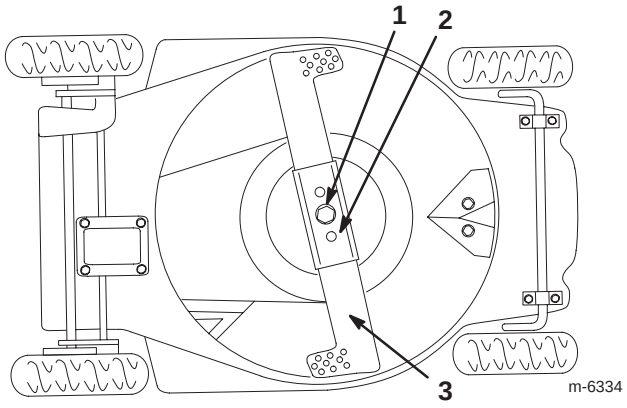

Figure 29

1. Blade bolt and lock washer
2. Blade stiffener
3. Blade

Inspecting the Blade

Carefully examine the blade for sharpness and wear, especially where the flat and the curved parts meet (Fig. 30A). Because sand and abrasive material can wear away the metal that connects the flat and curved parts of the blade, check the blade before using the lawn mower. If you notice a slot or wear (Figs. 30B and 30C), replace the blade; refer to Removing the Blade on page 19.

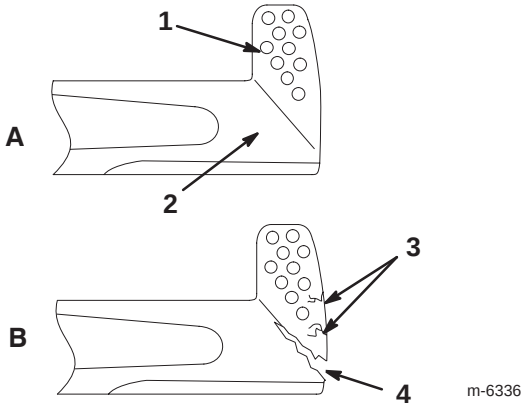

Figure 30

1. Sail
2. Flat part of blade
3. Wear
4. Slot formed

Note: For the best performance, install a new Toro blade before the cutting season begins. During the year, file down any small nicks to maintain the cutting edge.

Danger

A worn or damaged blade can break, and a piece of the blade could be thrown into the operator's or bystander's area, resulting in serious personal injury or death.

- **Inspect the blade periodically for wear or damage.**
- **Replace a worn or damaged blade.**

Removing the Blade

Warning

Operating the lawn mower without the blade stiffener in place can cause the blade to flex, bend, or break, resulting in serious injury or death to the operator or bystanders.

Do not operate the lawn mower without the blade stiffener.

1. Grasp the end of the blade using a rag or a thickly padded glove.

2. Remove the blade bolt, the lock washer, the blade, and the blade stiffener (Fig. 29).

Note: Turn the blade bolt counterclockwise to loosen it.

PROTOTYPE

Sharpening the Blade

File the top side of the blade to maintain its original cutting angle (Fig. 31A) and inner cutting edge radius (Fig. 31B). The blade will remain balanced if you remove the same amount of material from both cutting edges.

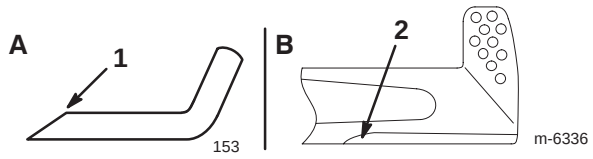

Figure 31

1. Sharpen at this angle only
2. Maintain the original radius here

Balancing the Blade

1. Check the balance of the blade by placing the center hole of the blade over a nail or screwdriver shank clamped horizontally in a vise (Fig. 32).

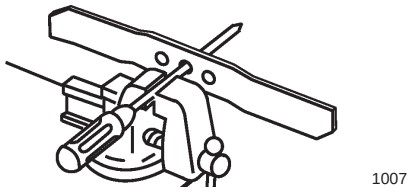

Figure 32

Note: You can also check the balance using a commercially manufactured, blade balancer.

2. If either end of the blade rotates downward, file that end (not the cutting edge or the end near the cutting edge). The blade is properly balanced when neither end drops.

Installing the Blade

1. Install a sharp, balanced Toro blade, the blade stiffener, the lock washer, and the blade bolt.

   Note: The sail part of the blade must point upward (toward the top of the housing).

2. Torque the blade bolt to 45 to 60 ft-lb (33 to 44 N·m).
3. Turn the lawn mower upright.
4. Connect the wire to the spark plug.

Cleaning Under the Belt Cover

Keep the area under the belt cover free of debris.

1. Stop the engine and wait for all moving parts to stop.
2. Lift off the cover and brush out all the debris from the belt area.
3. Install the belt cover.

Cleaning the Cooling System

After every 100 operating hours or every season, clean the dirt and the chaff from the cylinder, the cylinder head fins, and around the carburetor and the linkage. Remove debris from the air intake slots on the recoil housing. This will ensure proper cooling and the best engine performance.

Emptying the Fuel Tank

1. Stop the engine and wait for it to cool.

Important Drain gasoline from a cold engine only.

2. Disconnect the wire from the spark plug (Fig. 11).
3. Remove the cap from the fuel tank (Fig. 9).
4. Use a hand pump to pump the gasoline into a clean approved gasoline container.
5. Connect the wire to the spark plug.
6. Run the engine until it stops.
7. Start the engine again to ensure that all the gasoline is out of the carburetor.

Charging the Battery

Electric-start Model only

Warning

CALIFORNIA

Proposition 65 Warning

Battery posts, terminals, and related accessories contain lead and lead compounds, chemicals known to the State of California to cause cancer and reproductive harm. *Wash hands after handling.*

PROTOTYPE

Charge a new or stored battery for 72 continuous hours to ensure a full charge. The engine comes with an alternator which charges the battery during operation. You do not need to charge the battery after each mowing. During the lawn mowing season, charge the battery for 48 hours every month or as needed.

Important Do not overcharge the battery.

1. Stop the engine and wait for all moving parts to stop.
2. Disconnect the wire harness from the battery (Fig. 7).

3. Remove the battery by lifting it up and off of the lower handle section.

Note: You do not need to remove the battery if the lawn mower is near an electrical outlet.

4. Connect the Toro electro charger to the battery and plug it into a 230V AC power outlet.

Important Use only the Toro electro charger; other chargers could damage the battery. Always charge the battery indoors and at room temperature (70°F) when possible. Do not charge the battery longer than 72 hours; overcharging can damage the battery.

5. After charging the battery, unplug the charger and disconnect it from the battery.

6. Connect the wire harness to the battery terminal.

Disposing of the Battery

Electric-start Model only

Important Do not dispose of used batteries in your regular trash.

Important Recycle or dispose of a sealed lead (acid) battery according to local codes.

Incinerating, landfilling, or mixing sealed lead (acid) batteries with the municipal solid waste stream is prohibited by law in most areas.

Return this battery to a federal- or state-approved, sealed lead (acid) battery recycler.

Contact your local waste management officials for more information regarding the environmentally sound collection, recycling, and disposal of the battery.

Replacing the Fuse

Electric-start Model only

A fuse protects the electrical system charging circuit. If the battery does not stay charged, the fuse may be blown. Use a 5-amp plug-in type fuse.

1. Remove and discard the blown fuse.

2. Install the new fuse as shown in Figure 33.

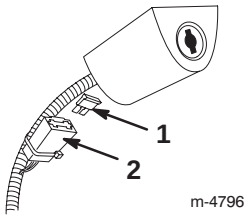

Figure 33

1. Fuse
2. Fuse holder

Folding the Handle

Warning

Folding or unfolding the handle improperly can pinch, stretch, or damage one or more of the cables. Any pinched, stretched, or damaged cable may cause an operational failure that results in an unsafe operating condition.

- **Do not pinch, stretch, or damage the cables.**
- **Handle the cables with care when folding or unfolding the handle.**
- **Do not use the lawn mower if one or more of the cables are pinched, stretched, or damaged. Contact an Authorized Service Dealer.**

1. Loosen the handle height adjustment knobs that secure the handle to the lawn mower.

2. Loosen the knobs that secure the upper handle section to the lower handle section.

3. Carefully swing the lower handle section forward until it rests on the engine.

4. Carefully swing the upper handle section rearward until it rests flat.

PROTOTYPE

Storage

To prepare the lawn mower for off-season storage, perform the recommended maintenance procedures. Refer to Maintenance on page 14.

Store the lawn mower in a cool, clean, dry place. Cover the lawn mower to keep it clean and protected.

Preparing the Fuel System

Warning

Gasoline can vaporize if you store it over long periods of time and explode if it comes into contact with an open flame.

- **Do not store gasoline over long periods of time.**
- **Do not store the lawn mower with gasoline in the fuel tank or the carburetor in an enclosure with an open flame. (For example, a furnace or a water heater pilot light.)**
- **Allow the engine to cool before storing it in any enclosure.**

Empty the fuel tank when mowing the last time before storing the lawn mower.

1. Run the lawn mower until the engine stops from running out of fuel.
2. Prime the engine and start it again.
3. Allow the engine to run until it stops. When you can no longer start the engine, it is sufficiently dry.

Preparing the Engine

1. While the engine is still warm, change the oil in the crankcase. Refer to Changing the Engine Oil on page 17.
2. Remove the spark plug (Fig. 11).
3. Using an oil can, add about one tablespoon of oil through the spark plug hole.
4. Slowly rotate the engine several times using the starter rope to distribute the oil.
5. Install the spark plug but **do not** connect the wire to the spark plug.

General Information

1. Clean the housing. Refer to Cleaning the under the Housing on page 15.
2. Clean any dirt and chaff from the cylinder, cylinder head fins, and blower housing.
3. Remove grass clippings, dirt, and grime from the external parts of the engine, the shrouding, and the top of the housing.
4. Check the condition of the blade. Refer to Maintaining the Blade on page 18.
5. Charge the battery (electric-start model only); refer to Charging the Battery on page 20. Store the battery in an unheated area, if possible. For long-term battery storage, charge the battery every 6 months; in temperatures of 80°F (27°C) or above, charge the battery every 90 days.
6. Service the air filter; refer to Servicing the Air Filter on page 16.
7. Lubricate the self-propel drive; refer to Lubricating the Self-Propel Drive on page 17.
8. Tighten all nuts, bolts, and screws.
9. Touch up all rusted or chipped paint surfaces with paint available from an Authorized Service Dealer.

Removing From Storage

Warning

Folding or unfolding the handle improperly can pinch, stretch, or damage one or more of the cables. Any pinched, stretched, or damaged cable may cause an operational failure that results in an unsafe operating condition.

- **Do not pinch, stretch, or damage the cables.**
- **Handle the cables with care when folding or unfolding the handle.**
- **Do not use the lawn mower if one or more of the cables are pinched, stretched, or damaged. Contact an Authorized Service Dealer.**

1. Carefully unfold the upper handle until it nests with the lower handle, then tighten the knobs.
2. Check and tighten all fasteners.
3. Remove the spark plug (Fig. 11) and spin the engine rapidly using the starter to blow the excess oil from the cylinder.
4. Clean the spark plug or replace it if it is cracked, broken, or if the electrodes are worn.

PROTOTYPE

5. Install the spark plug and torque it to 15 ft-lb (20 N·m).
6. Perform the recommended maintenance procedures; refer to Maintenance on page 14.
7. Fill the fuel tank with fresh, clean gasoline.
8. Check the engine oil level. Refer to Checking the Engine Oil Level on page 15.
9. Charge the battery; refer to Charging the Battery on page 20.
10. Connect the wire to the spark plug.

Troubleshooting

Toro designed and built your lawn mower for trouble-free operation. Check the following components and items carefully, and refer to Maintenance on page 14 for more information. If a problem continues, contact an Authorized Service Dealer.

Problem	Possible Causes	Corrective Action
Engine does not start	1. The fuel tank is empty or the fuel system contains stale fuel.	1. Drain and/or fill the fuel tank with fresh gasoline. If the problem persists, contact an Authorized Service Dealer.
	2. The primer has not been pushed in.	2. Push the primer in 3 times.
	3. The wire is not connected to the spark plug.	3. Connect the wire to the spark plug.
	4. The spark plug is pitted, fouled, or the gap is incorrect.	4. Check the spark plug and adjust the gap if necessary. Replace the spark plug if it is pitted, fouled, or cracked.
Engine starts hard or loses power	1. The fuel tank contains stale fuel.	1. Drain and fill the fuel tank with fresh gasoline.
	2. The fuel cap vent hole is plugged.	2. Clean the fuel cap vent hole or replace the fuel cap.
	3. The air filter element is dirty and is restricting the air flow.	3. Clean the air filter pre-cleaner and/or replace the paper air filter.
	4. The underside of the housing contains clippings and debris.	4. Clean under the housing.
	5. The spark plug is pitted, fouled, or the gap is incorrect.	5. Check the spark plug and adjust the gap if necessary. Replace the spark plug if it is pitted, fouled, or cracked.
	6. The engine oil level is low or the oil is dirty.	6. Check the engine oil. Change the oil if it is dirty or add oil if it is low.
Engine runs rough	1. The wire is not connected to the spark plug.	1. Connect the wire to the spark plug.
	2. The spark plug is pitted, fouled, or the gap is incorrect.	2. Check the spark plug and adjust the gap if necessary. Replace the spark plug if it is pitted, fouled, or cracked.
	3. The air filter element is dirty and is restricting the air flow.	3. Clean the air filter pre-cleaner and/or replace the paper air filter.

PROTOTYPE

Problem	Possible Causes	Corrective Action
Lawn mower or engine vibrates excessively	1. The blade is bent or is out of balance. 2. The blade bolt is loose. 3. The underside of the housing contains clippings and debris. 4. The engine mounting bolts are loose.	1. Balance the blade. If the blade is bent, replace it. 2. Tighten the blade bolt. 3. Clean under the housing. 4. Tighten the engine mounting bolts.
Uneven cutting pattern	1. All 4 wheels are not at the same height. 2. The blade is dull. 3. You are mowing in the same pattern repeatedly. 4. The underside of the housing contains clippings and debris.	1. Place all 4 wheels at the same height. 2. Sharpen and balance the blade. 3. Change the mowing pattern. 4. Clean under the housing.
Discharge chute plugs	1. The cutting height is too low. 2. You are mowing too fast. 3. The grass is wet. 4. The underside of the housing contains clippings and debris.	1. Raise the cutting height. 2. Slow down. 3. Allow the grass to dry before mowing. 4. Clean under the housing.
Lawn mower does not self-propel	1. The self-propel drive cable is out of adjustment or is damaged. 2. There is debris under the belt cover.	1. Adjust the self-propel drive cable. Replace the cable if necessary. 2. Clean the debris from under the belt cover.

PROTOTYPE