Form No. 3328-945

Dethatching Reel

Greensmaster® 3000 Series

Model No. 04493—230000001 and Up

Parts Catalog

Ordering Replacement Parts

To order replacement parts, please supply: the part number, the quantity, and the description of each part desired.

Understanding Reference Numbers

Each identified part in an illustration has a reference number. The reference number for a part also appears in the parts list, along with other information about the part.

This catalog uses two special reference number formats, one to indicate parts in a service assembly and another to indicate the quantity of a given part in an illustration.

Service Assembly Reference Numbers

Parts in service assemblies have reference numbers in the form **a:b.** The **a** represents the reference number of the entire service assembly and the **b** represents a sequential number unique to each part within the service assembly.

For example, a wheel assembly might be identified by reference number **6**, the tire by **6:1**, the valve by **6:2**, and the wheel by **6:3**. When you order the assembly identified by reference number 6, you receive all parts identified by reference numbers 6:1, 6:2, and 6:3. However, you may also order any part individually.

Reference numbers of this type appear in illustrations and in part lists.

Reference Numbers Indicating Quantity

In an illustration, if a reference number indicates more than one part, the reference number has the form **nX y.** The **n** represents the quantity of the part, the **X** is the multiplication symbol, and the **y** represents the reference number.

For example, in an illustration, the reference number **2X 37** means that two of the parts identified by reference number 37 are indicated.

© The TORO Company — 2002
All Rights Reserved

Contents

Description	Page
Dethatcher Assembly	3
Dethatcher Shaft Assembly	4
Roller Assembly No. 95-5943	5

Accessories

Description	Model / Part No.
Roller	95-5943
Scraper Kit	95-1600

Part Description Abbreviations

Part descriptions in this catalog may include the following abbreviations.

Abbreviation	Meaning
AR	as required
ASM	assembly
CARR	carriage
DEG	degrees
FH	flat head
GA	gauge
HF	hex flange
HH	hex head
HHF	hex head flange
HLH	hex lag head
HJ	hex jam
HOC	height-of-cut
HS	hex socket
HSBH	hex socket button head
HSFH	hex socket flat head
HSH	hex socket head
HWH	hex washer head
HWHTF	hex washer head thread forming
HYD	hydraulic
INC	incorporated
LH	left hand
NI	nylon insert
PPH	Phillips pan head
PTH	Phillips truss head
PTO	power take off
RH	right hand
SFH	slotted fillister head
SHH	slotted hex head
SQH	square head
SHWH	slotted hex washer head
SPH	slotted pan head
SRH	slotted round head
STD	standard
TAP	self tapping
TTH	Torx truss head
WH	wing head

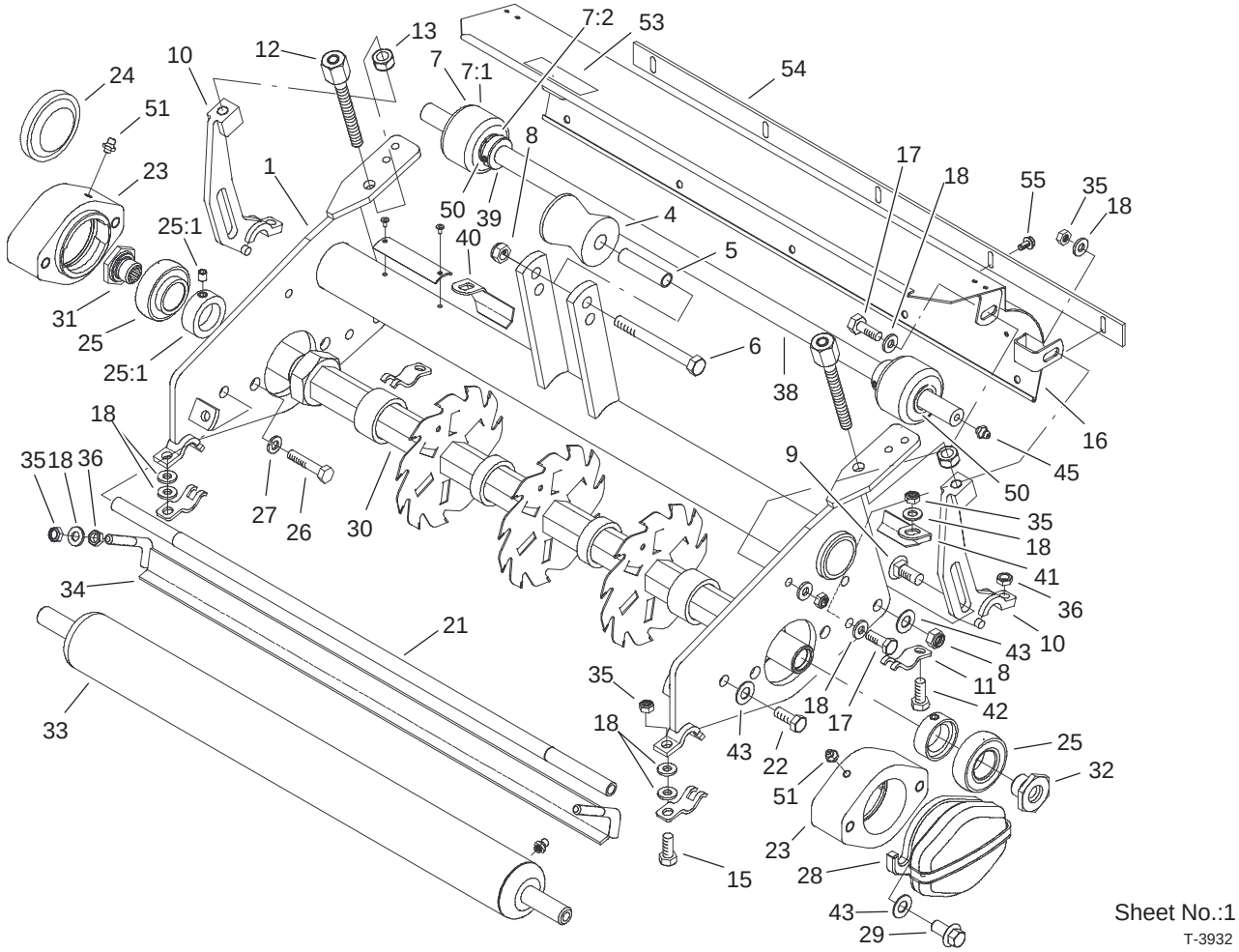

Dethatcher Assembly

Ref. No.	Part No.	Qty.	Description
1	98-3587-01	1	Frame-Dethatcher
4	93-2463	1	Roller-Lift
5	93-2464	1	Spacer-Roller
6	33115-080	1	Screw-HH
☆7		2	Wheel / Bearing ASM
7:1	94-9211	1	Wheel ASM
7:2	95-7497	2	Bushing-Wheel
8	33025-00	3	Nut-Lock
9	33125-025	2	Screw-CARR
10	95-1638	2	Bracket-Rear, HOC Adjust
11	99-8168	4	Collar-HOC
12	95-1633	2	HOC Adjust ASM
13	3296-5	2	Nut-Lock, NI
15	33114-025	2	Screw-HH
16	98-3551	1	Grass Shield ASM
17	33114-020	4	Screw-HH
18	3256-74	16	Washer-Flat
21	98-2196	1	Rod-Shield
22	33115-020	2	Screw-HH
23	95-7148	2	Housing-Bearing
24	2410-30	1	Cap-Plastic
25	94-3405	2	Bearing-Ball
25:1	3245-35	1	Screw-HS
25:2	251-77	1	Lockcollar-Bearing
26	33115-025	4	Screw-HH

Ref. No.	Part No.	Qty.	Description
27	48-9590	4	Washer-Lock
28	95-1642-01	1	Weight-Counter
29	93-2569	4	Screw-HHF
☆30		1	Dethatcher Shaft ASM
31	93-1394	1	Nut-Spline
32	94-9214	1	Nut-Spline, LH
33	95-5943	1	Roller ASM
34	94-9226	1	Bracket-Scraper
35	33024-00	10	Nut-Lock
36	33014-00	4	Nut-Hex
38	94-9210	1	Shaft-Wheel, Rear
39	94-9213	2	Collar-Shaft
40	94-9219	1	Scraper-Roller, RH
41	94-9220	1	Scraper-Roller, LH
42	33114-030	2	Screw-HH
43	3256-24	6	Washer-Flat
45	302-5	2	Fitting-Grease
50	257-11	4	Washer-Thrust
51	302-5	2	Fitting-Grease
53	93-6688	1	Decal-Danger, Europe
54	36-7260	1	Bar-Off, Cut
55	104-2065	5	Screw-HWH

☆ Not serviced separately

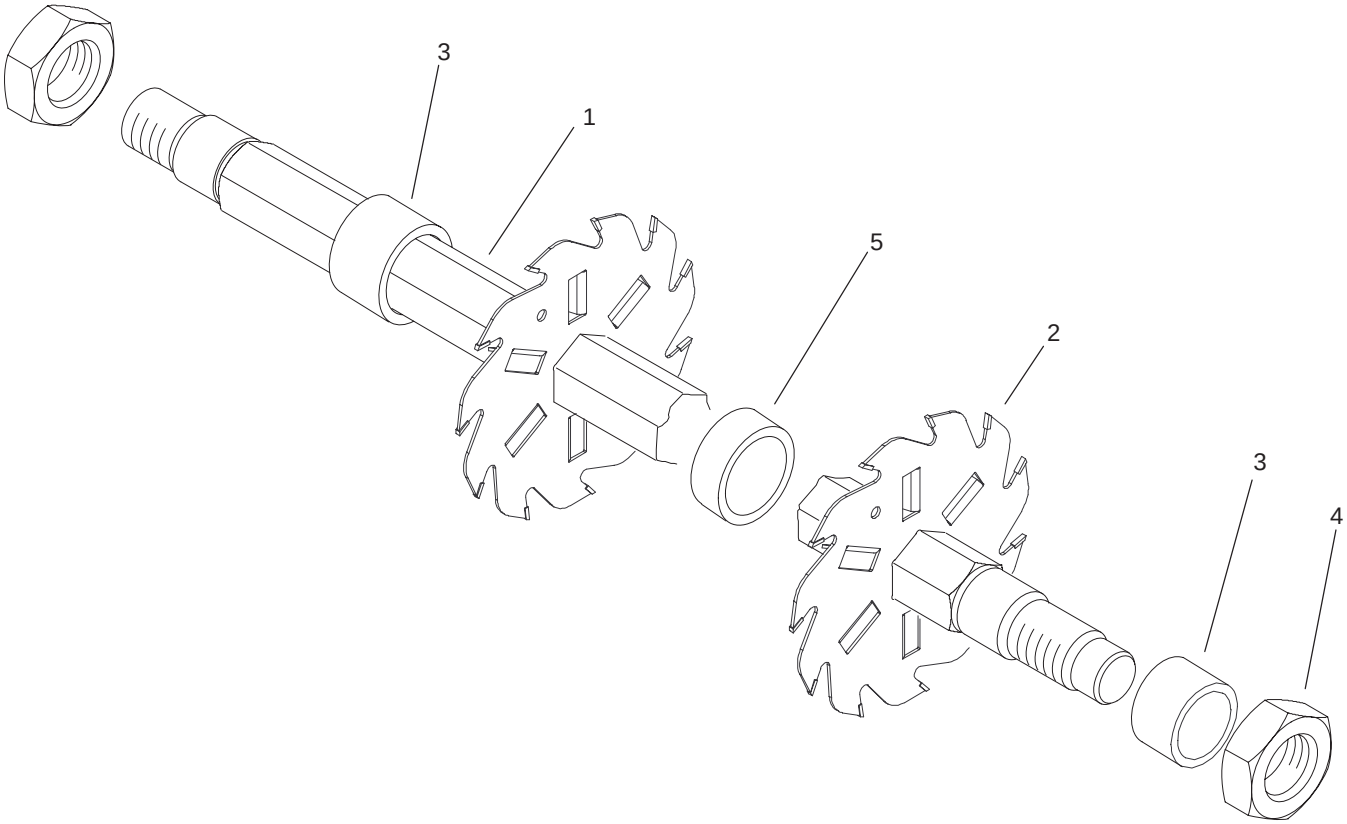

Sheet No.:A1

T-3933

Dethatcher Shaft Assembly

Ref. No.	Part No.	Qty.	Description
1	94-9202	1	Shaft-Dethatcher
2	106-6355	36	Blade-11 Tooth (Carbide)
*2	106-5422	36	Blade-11 Tooth (Narrow Carbide)
3	82-6600	2	Spacer
4	67-5840	2	Nut-Jam
5	17-1580	35	Spacer

Ref. No.	Part No.	Qty.	Description

* Not illustrated

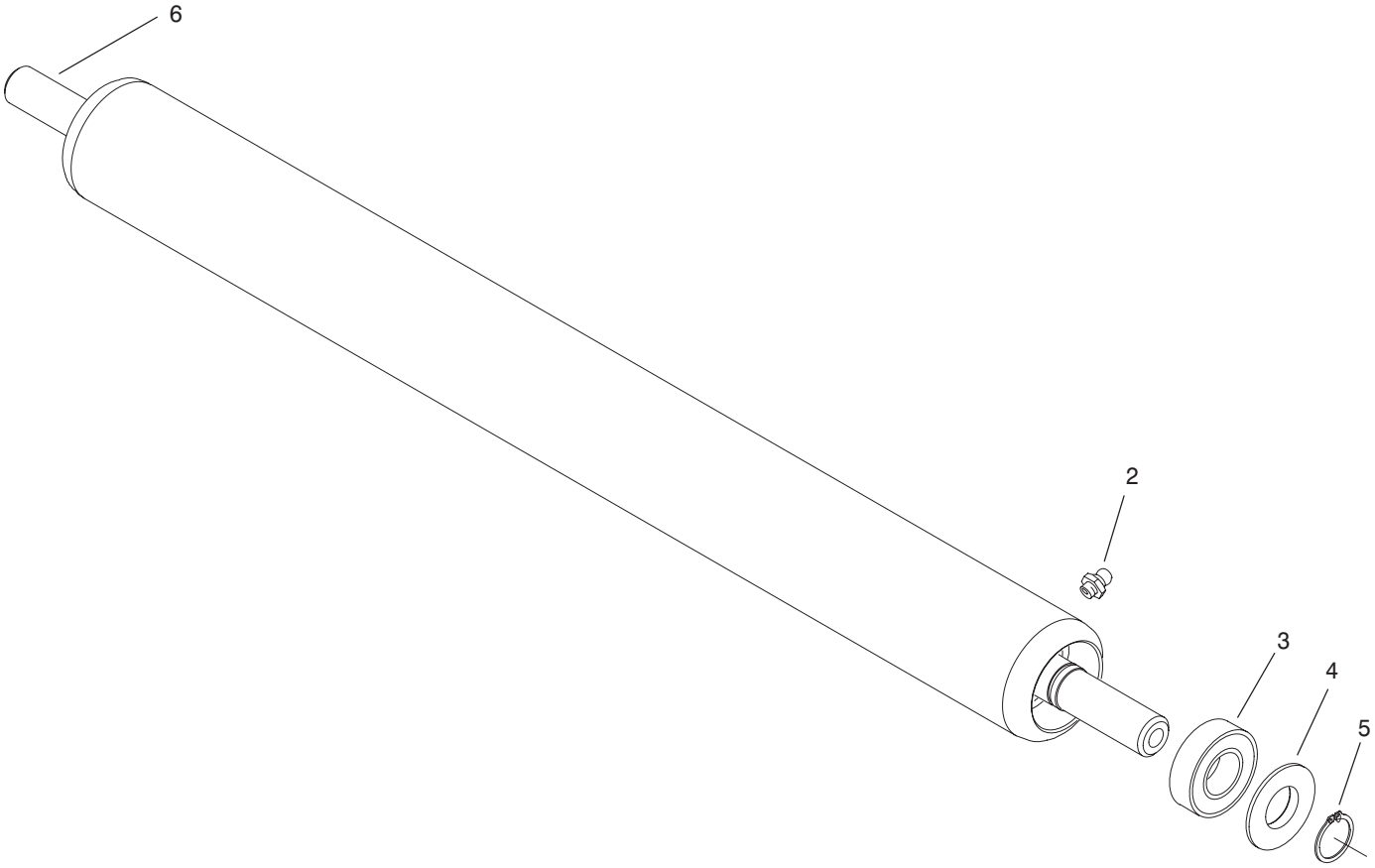

Sheet No.:A2

T-3934

Roller Assembly No. 95-5943

Ref. No.	Part No.	Qty.	Description
2	302-5	2	Fitting-Grease
3	85-9970	2	Bearing-Ball
4	85-7190	2	Washer-Shield
5	32151-12	2	Ring-Retaining
6	95-5946	1	Shaft-Roller

Ref. No.	Part No.	Qty.	Description

Maintenance Record

Date								

Maintenance Record

Date								

TORO®