Form No. 3467-555 Rev A

TORO®

Count on it.

Parts Catalog

Greensmaster® 1026 Mower

Model No. 04840—Serial No. 416500000 and Up

Register at www.Toro.com.
Original Instructions (EN)

CE

3467-555 A

Ordering Replacement Parts

To order replacement parts, please supply the part number, the quantity, and the description of each part desired.

Understanding Reference Numbers

Each identified part in an illustration has a reference number. The reference number for a part also appears in the parts list, along with other information about the part.

This catalog uses two special reference number formats, one to indicate parts in a service assembly and another to indicate the quantity of a given part in an illustration.

Service Assembly Reference Numbers

Parts in service assemblies have reference numbers in the form a:b. The a represents the reference number of the entire service assembly and the b represents a sequential number unique to each part within the service assembly.

For example, a wheel assembly might be identified by reference number 6, the tire by 6:1, the valve by 6:2, and the wheel by 6:3. When you order the assembly identified by reference number 6, you receive all parts identified by reference numbers 6:1,6:2, and 6:3. However, you may also order any part individually. Reference numbers of this type appear in illustration and in parts lists.

Reference Numbers Indicating Quantity

In an illustration, if a reference number indicates more than one part, the reference number has the form nX y. The n represents the quantity of the part, the X is the multiplication symbol, and the y represents the reference number.

For example, in an illustration, the reference number 2X 37 means that two of the parts identified by reference number 37 are indicated.

Contents

Frame and Handle Mount Assembly 4
Drum Drive Assembly 5
Drum Drive Replacement Kit Assembly No. 147-2345 6
Drum Drive Gear Box Assembly 7
Transmission Assembly 8
Engine Assembly 9
Engine Assembly No. 147-2328 11
Transmission Gearbox Assembly No. 140-9324 Transmission Case Assembly 12
Transmission Gearbox Assembly No. 140-9324 Reel Drive Assembly 13
Transmission Gearbox Assembly No. 140-9324 Traction Drive Assembly 14
Differential Assembly No. 132-4555 15
Reel Controls and Covers Assembly 16
Upper Receiver Assembly No. 147-2288 17
Upper Handle Assembly 18
Traction Bail Assembly 19
Miscellaneous Parts Assembly 20
Attachments and Accessories 21

© 2024—The Toro® Company
8111 Lyndale Avenue South
Bloomington, MN 55420

Contact us at www.Toro.com.
Printed in the USA.
All Rights Reserved

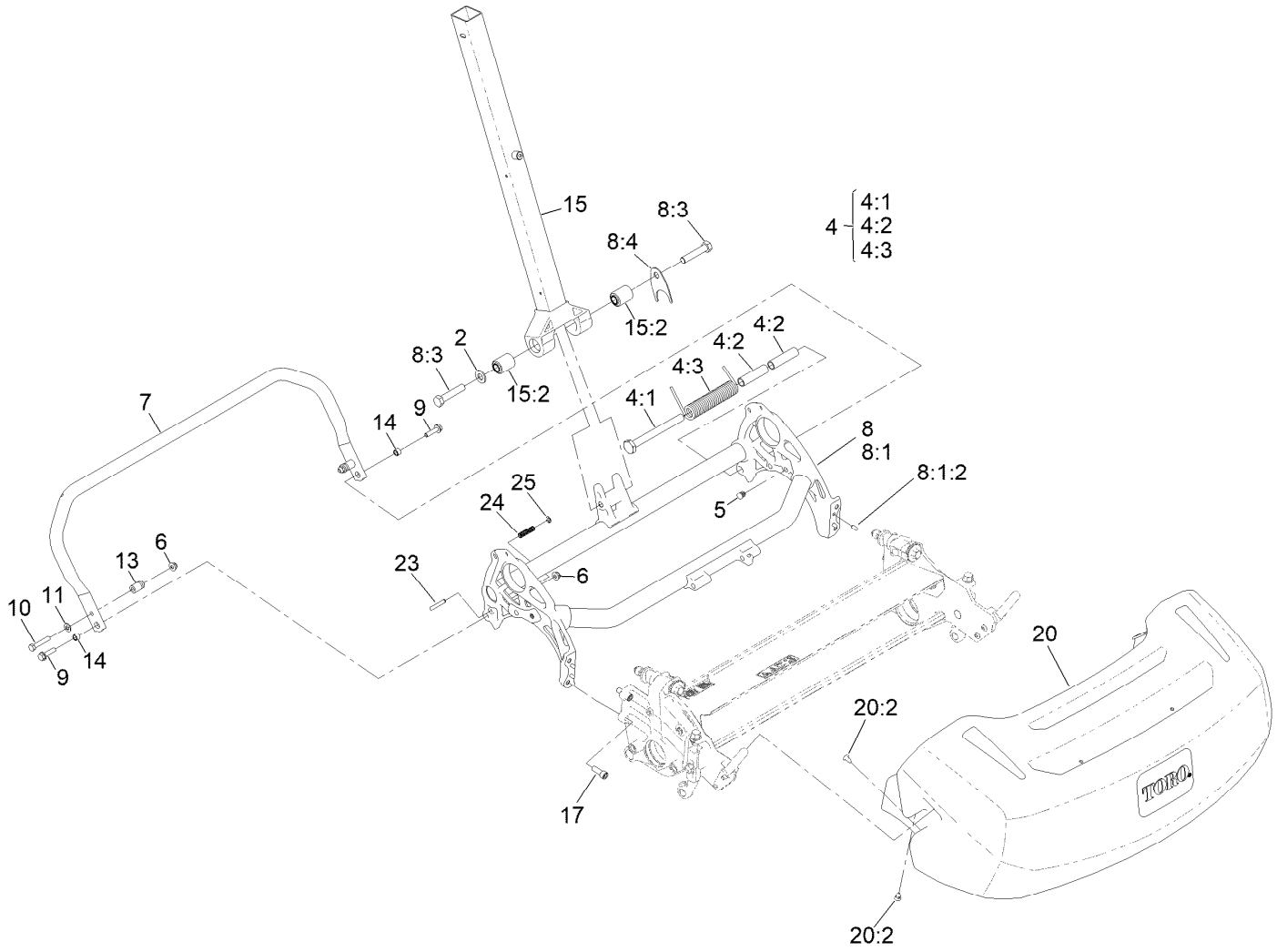

Frame and Handle Mount Assembly

Ref.	Part Number	Qty.	Description
2	3256-26	1	Washer-Flat
4	147-2290	1	Kit-Kickstand Spring Replacement
4:1	147-2285	1	Pin-Mount, Spring
4:2	147-2286	2	Sleeve, Spring-Mount
4:3	147-2268	1	Spring-Torsion, LH
5	139-4326	2	Plug-Plastic
6	119-4041	3	Nut-HF
7	147-2271	1	Kickstand, 26 Inch
8	140-9362	1	Frame ASM, 26"
8:1		1	Frame ASM. 26" ●
8:1:2	95-0715	4	Pin-Dowel
8:3	325-10	2	Screw-HH
8:4	140-9333	1	Washer, Anti-Rotation

Ref.	Part Number	Qty.	Description
9	112-6913	2	Screw-HF
10	322-9	2	Screw-HH
11	3256-23	2	Washer-Plain
13	65-7900	2	Retainer-Spring
14	65-7910	2	Spacer
15	137-0292	1	Lower Handle ASM
15:2	138-1469	2	Bushing-Straight
17	3274-7	4	Screw-HSH
20	140-9294	1	Basket-Grass, GR1026
20:2	121-4729	4	Plug
23	139-7431	1	Pin-Kickstand, Lock
24	73-3450	1	Spring-Compression
25	32151-86	1	E-Ring

● Not serviced separately

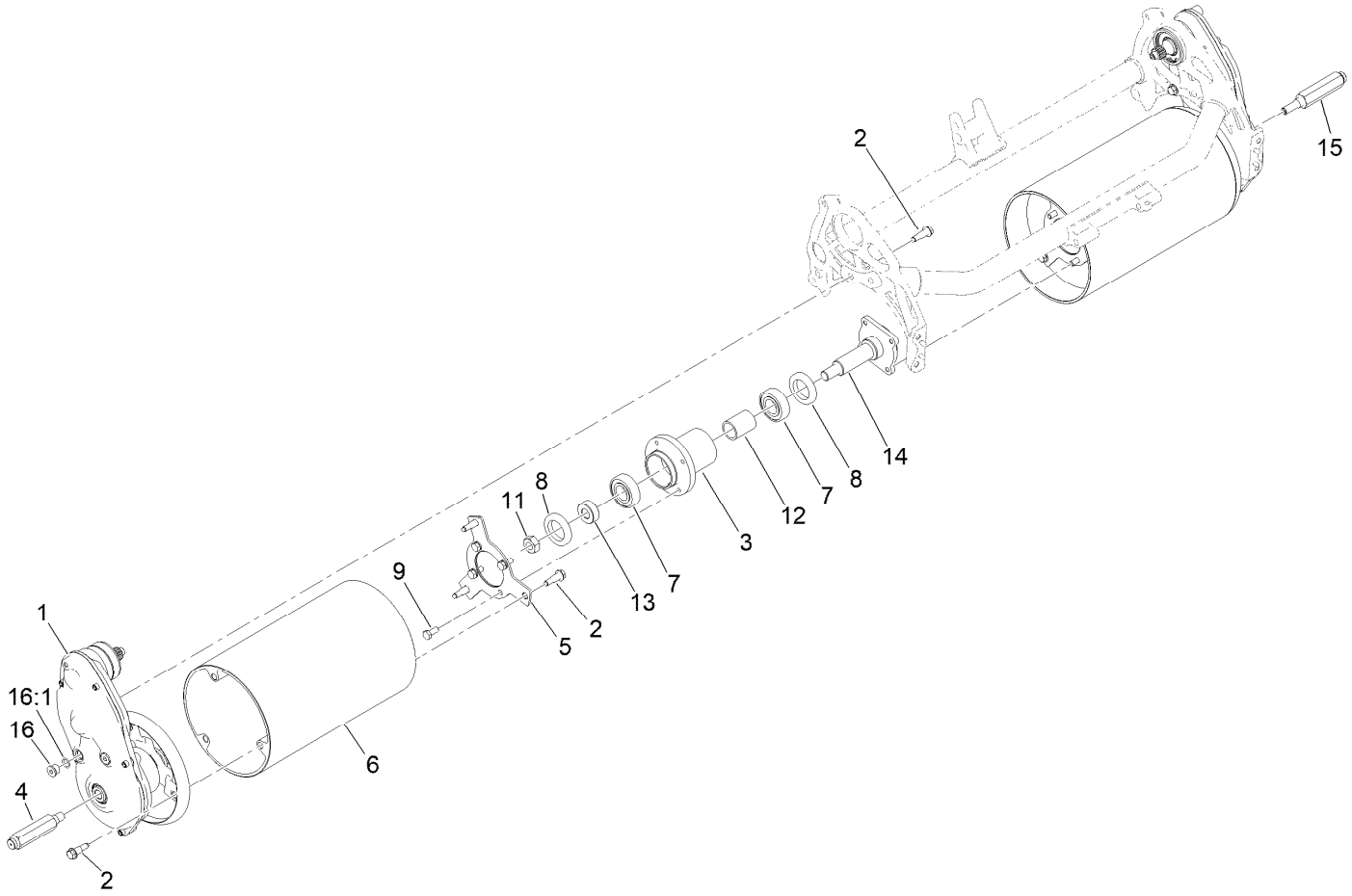

Drum Drive Assembly

Ref.	Part Number	Qty.	Description
1	147-2345	1	Kit-Drum Drive Replacement
2	132-4607	14	Bolt-Shoulder, Flange
3	132-6971	1	Hub-Drum
4	132-4605	1	Shaft-Hex, RH
5	147-2257	2	Plate-Drum, Hub
6	138-1529	2	Drum-Traction, 26 Inch
7	251-82	2	Bearing-Ball
8	253-159	2	Seal

Ref.	Part Number	Qty.	Description
9	114-7728	8	Screw-HF
11	3296-33	1	Nut-Lock, NI
12	65-6520	1	Spacer
13	65-6530	1	Spacer
14	94-5850	1	Spindle-Drum
15	132-4606	1	Shaft-Hex, LH
16	353-989	4	Plug-Hex, Hollow
16:1	237-42	1	O-Ring

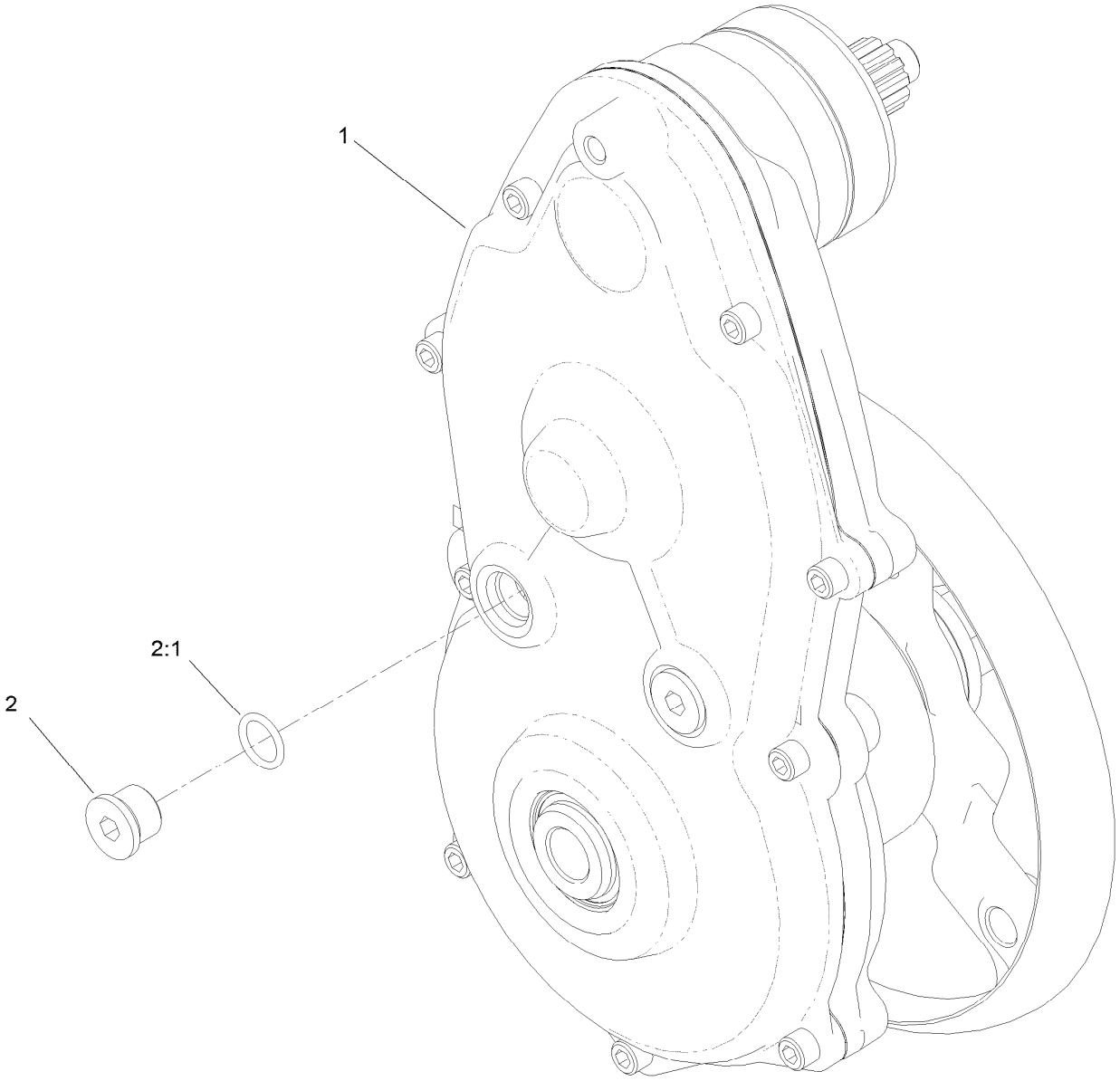

Drum Drive Replacement Kit Assembly No. 147-2345

Ref.	*Part Number*	*Qty.*	*Description*
1		1	Drum Drive Gear Box ASM ●
2	353-989	2	Plug-Hex, Hollow
2:1	237-42	1	O-Ring

● Not serviced separately

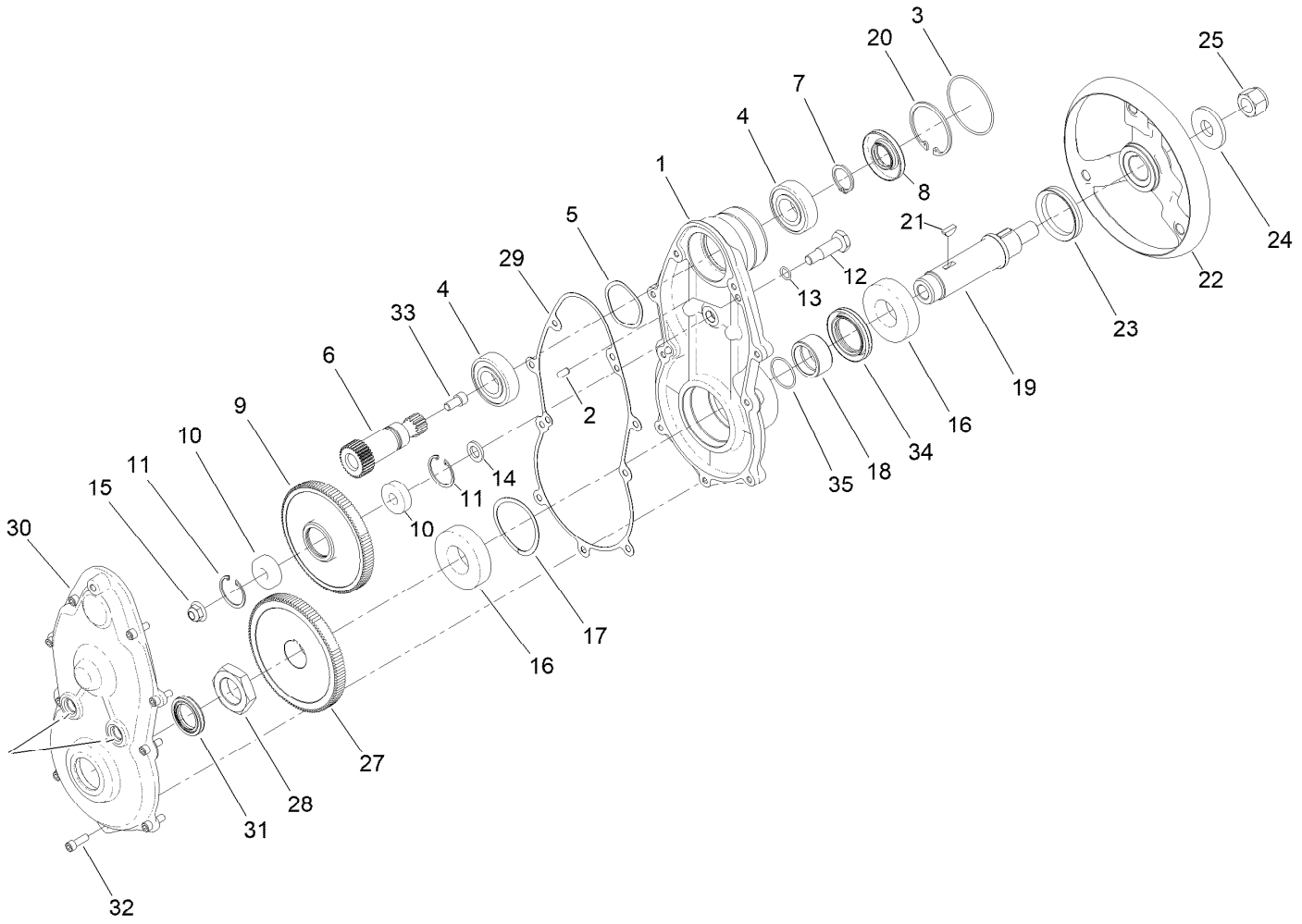

Drum Drive Gear Box Assembly

Ref.	Part Number	Qty.	Description
1	147-2321	1	Housing-Drive, Drum
2	133-4591	2	Pin-Dowel
3	133-9082	1	O-Ring
4	251-82	2	Bearing-Ball
5	3290-485	1	Washer-Wave
6	132-4565	1	Gear-Spur, 30T
7	138-1507	1	Ring-Retaining, EXT (25MM)
8	138-1491	1	Seal-Oil
9	137-0274	1	Gear-Spur, 108T
10	49-2410	2	Bearing-Ball
11	138-1506	2	Ring-Retaining, Int (32MM)
12	133-4558	1	Pin-Bearing, Short
13	80-8460	1	O-Ring
14	133-4553	1	Spacer-Bearing
15	119-4042	1	Nut-HF, NI
16	251-312	2	Bearing-Ball
17	115-5258	1	Spring-Wire, Flat

Ref.	Part Number	Qty.	Description
18	147-2348	1	Spacer
19	133-4562	1	Shaft-Drum, Drive
20	138-1480	1	Ring-Retaining, Int (52MM)
21	138-1504	2	Key-Woodruff, 5MM
22	133-9244	1	Hub-Drum, Outer
23	253-161	1	Seal-V-Ring
24	104-9216	1	Washer-Hardened
25	126-3841	1	Nut-Hex, NI
27	147-2349	1	Gear-Spur, 114T
28	133-9078	1	Nut-Hex
29	147-2324	1	Gasket-Drum Drive
30	147-2323	1	Cover-Drive, Drum
31	133-4559	1	Seal-Oil
32	140-9233	9	Screw-HSH
33	3274-12	1	Screw-HSH
34	147-2346	1	Seal-Oil
35	147-2347	1	O-Ring

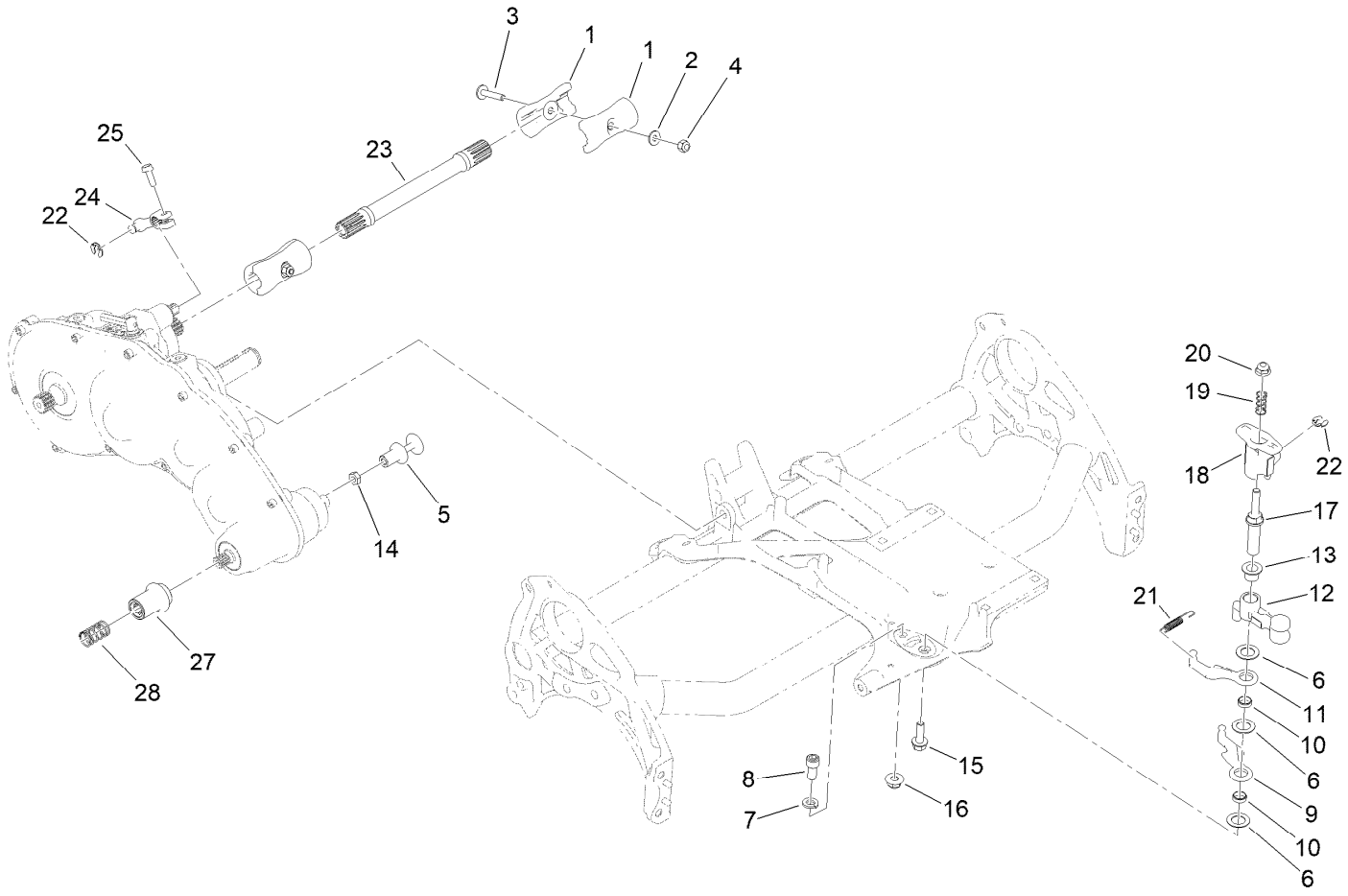

Transmission Assembly

Ref.	Part Number	Qty.	Description
1	133-9100	4	Coupler-Splined, 4 Tooth
2	119-8952	2	Washer
3	126-8232	2	Screw-Truss Hex Skt
4	3296-42	2	Nut-Lock, NI
5	133-9207	1	Adapter-Slider
6	139-7362	3	Washer-Poly
7	3253-21	1	Washer-Lock
8	131-8573	1	Screw-HSH
9	138-1523	1	Reel Lever
10	133-9226	2	Bushing-Straight
11	138-1524	1	Lever-Reel
12	133-9206	1	Bellcrank-Reel
13	125-5239	1	Bushing-Flange
14	120-9638	1	Nut-Jam

Ref.	Part Number	Qty.	Description
15	115-5142	1	Screw-HHF
16	119-4042	1	Nut-HF, NI
17	137-0298	1	Shaft-Selector, Reel
18	137-0299	1	Hub-Selector, Reel
19	117-1031	1	Spring-Compression
20	119-4041	1	Nut-HF
21	119-4609	1	Spring-Extension
22	32151-47	2	Ring-Retaining
23	139-4328	1	Shaft-Drive, 26 Inch
24	133-9117	1	Lever-Brake, Cable
25	131-6150	1	Screw-HWHTF
27	140-9366	1	Tube-Drive, Reel
28	133-9128	1	Spring-Compression, Coupler

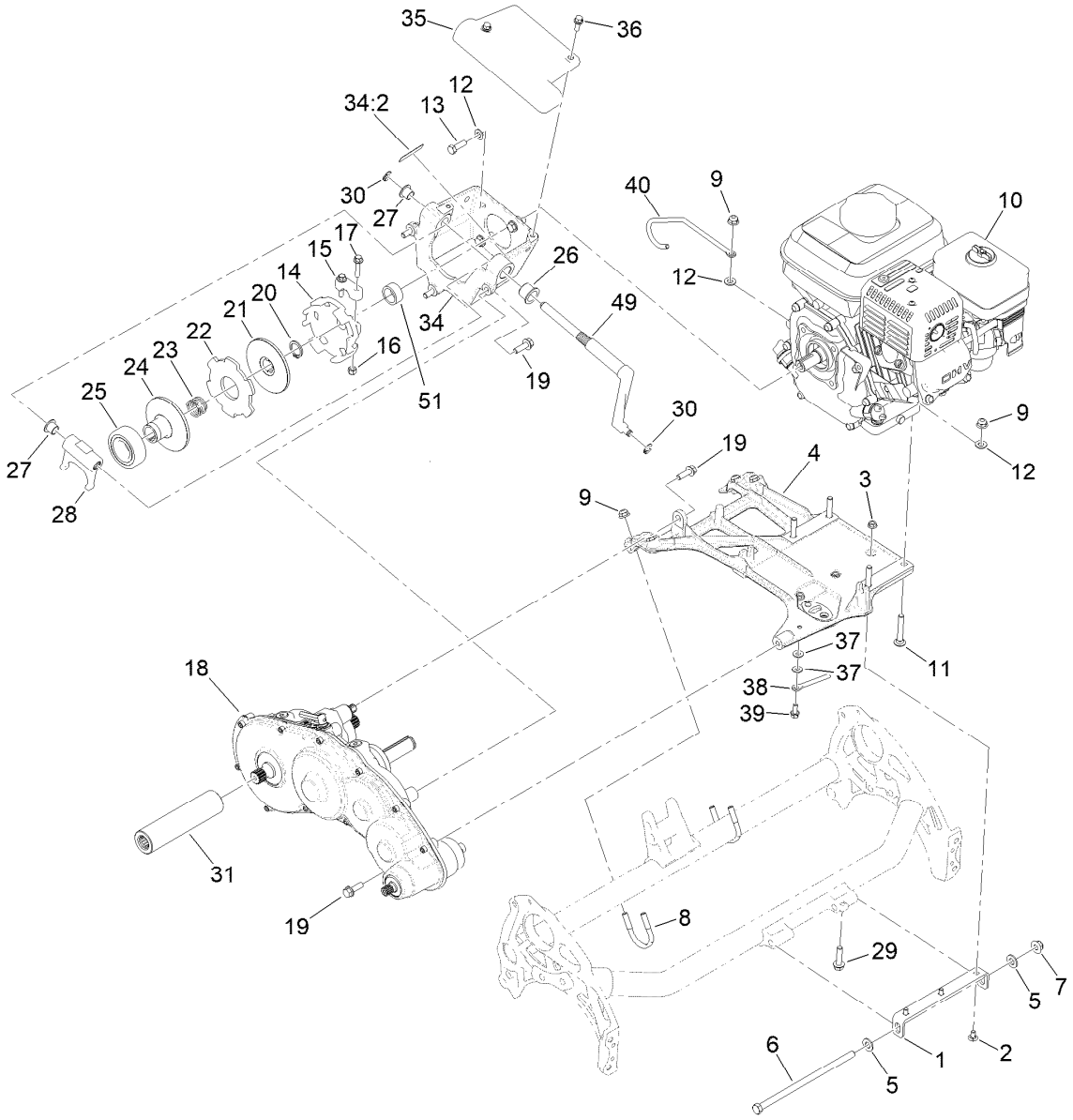

Engine Assembly

Ref.	Part Number	Qty.	Description
1	138-1623-01	1	Bracket-Mount, Engine
2	116-5611	3	Bolt-Carriage 1/4-20 X 1/2 Short Neck
3	32128-10	3	Nut-Lock, HHF
4	138-5517	1	Base-Engine
5	3256-24	2	Washer-Plain
6	323-30	1	Screw-HH
7	119-4042	1	Nut-HF, NI
8	137-0301	2	Clamp-Tube
9	119-4041	8	Nut-HF
10	147-2328	1	Engine ASM, Honda ●
11	3230-6	4	Bolt-CARR
12	3256-23	8	Washer-Plain
13	131-5919	4	Screw-HH, Patch
14	138-3542	1	Hub-Clutch, External
15	138-5522	1	Clamp-Hub, Clutch
16	3296-42	2	Nut-Lock, NI
17	127-8639	2	Screw-HHF

Ref.	Part Number	Qty.	Description
18	140-9324	1	Kit-Transmission Replacement
19	115-5142	5	Screw-HHF
20	32151-33	1	Ring-Retaining, EXT
21	133-9095	1	Disc-Clutch
22	133-9094	1	Plate-Friction
23	133-9123	1	Spring-Compression, Clutch
24	138-1508	1	Disc-Clutch, Slider
25	138-1505	1	Bearing-Sealed, Self Aligning
26	132-4089	1	Bushing
27	125-5239	2	Bushing-Flange
28	138-3548	1	Fork-Clutch
29	112-6913	1	Screw-HF
30	32151-47	2	Ring-Retaining
31	138-1616	1	Tube-Drive
34	139-4301	1	Bell Housing ASM
34:2	120-9570	1	Decal-Warning

● Obtain parts from www.honda-engines.com

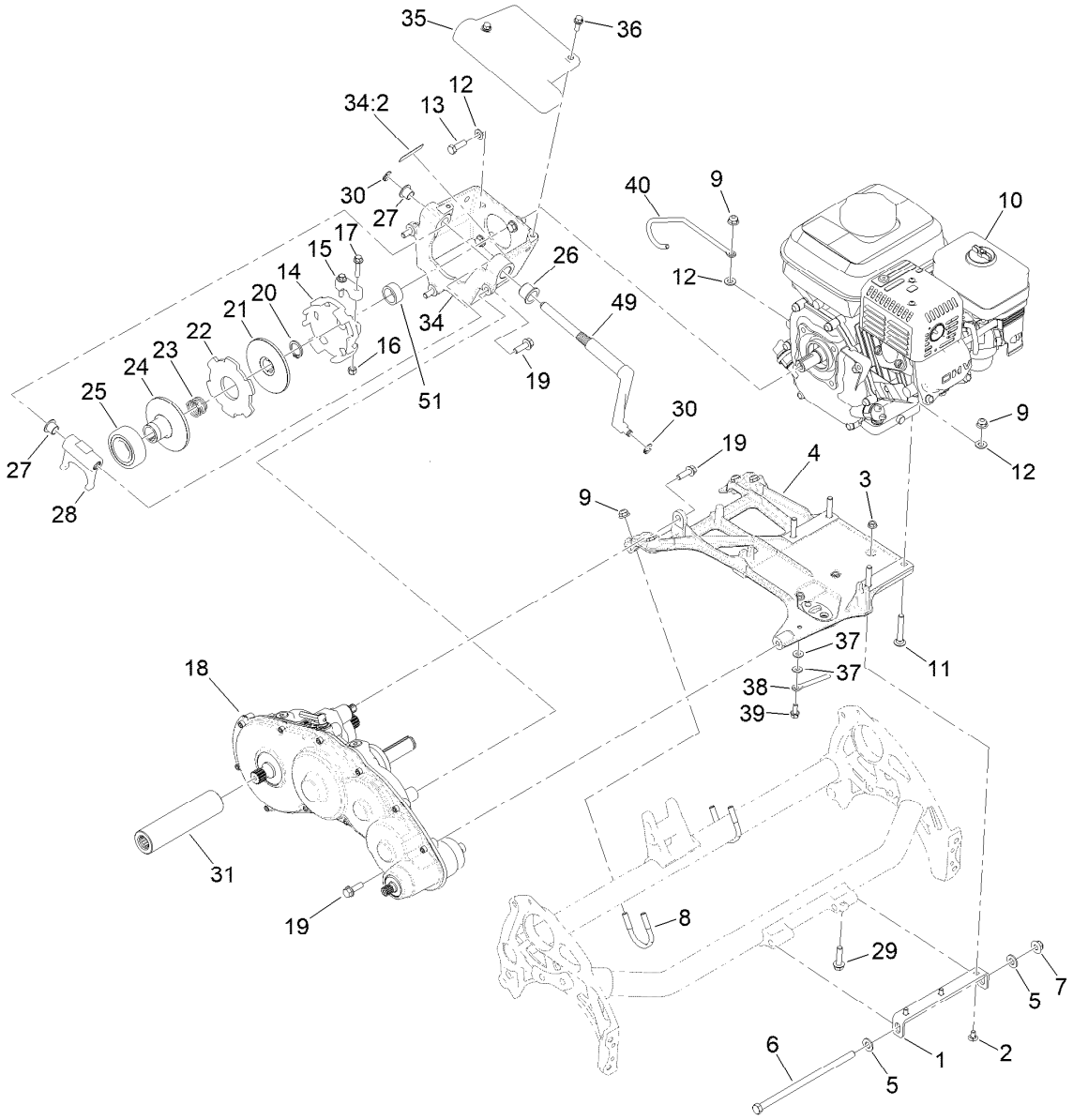

Engine Assembly (continued)

Ref.	Part Number	Qty.	Description
35	138-5545	1	Cover-Clutch
36	119-1138	2	Screw-HHF
37	3256-22	2	Washer-Flat
38	138-1591	1	Guide-Cable
39	3234-33	1	Screw-HHF
40	139-4309	1	Guide-Cable
49	138-3549	1	Shaft-Fork
51	147-2265	1	Spacer-Clutch

● Obtain parts from www.honda-engines.com

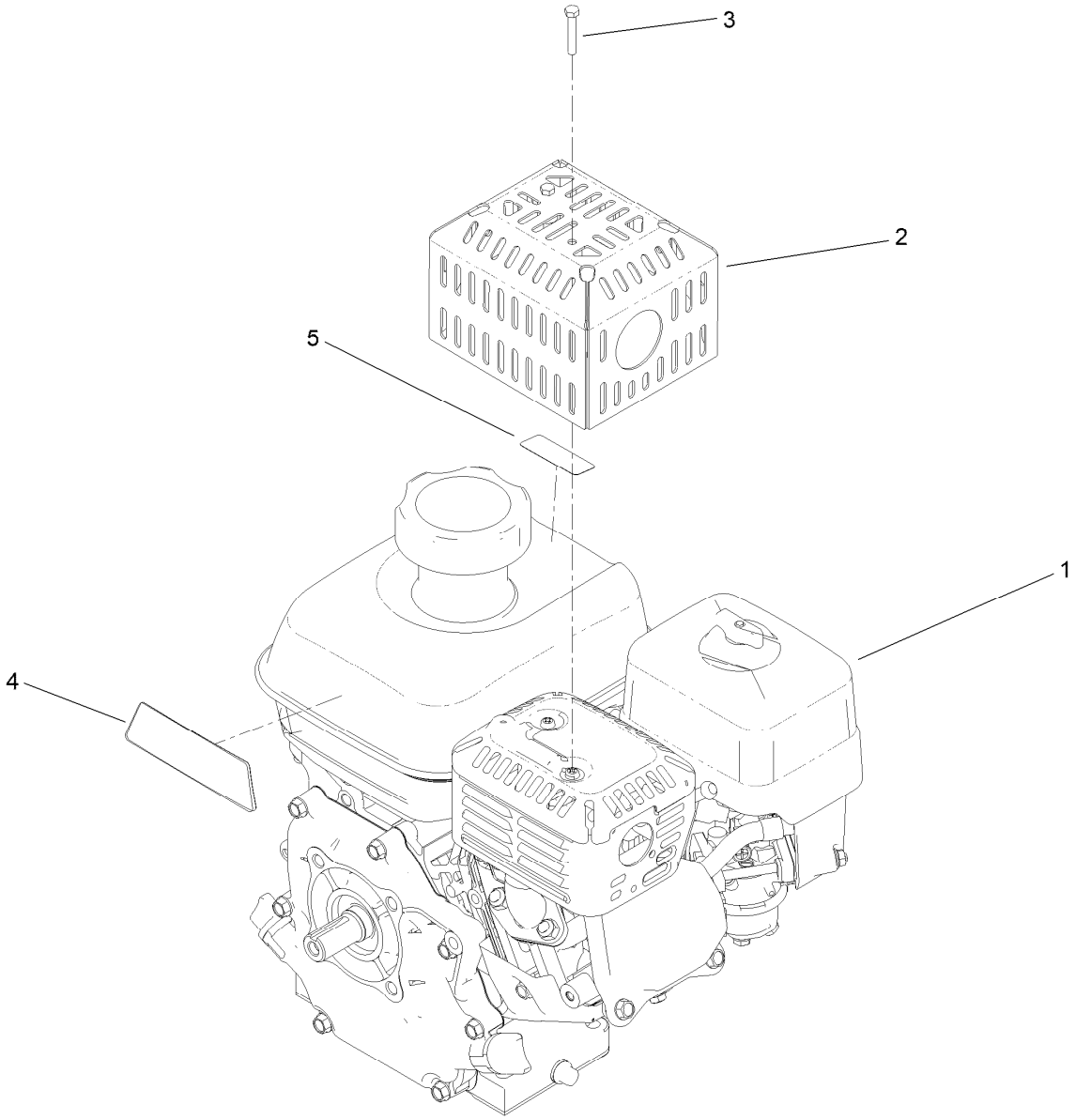

Engine Assembly No. 147-2328

Ref.	*Part Number*	*Qty.*	*Description*
1		1	Engine ASM, Honda ●■
2	138-2128-03	1	Guard-Muffler
3	87-5150	2	Screw-HH
4	138-2138	1	Decal-Warning, Engine
5	130-8322	1	Decal-Warning, Ethanol

● Not serviced separately

■ Obtain parts from www.honda-engines.com

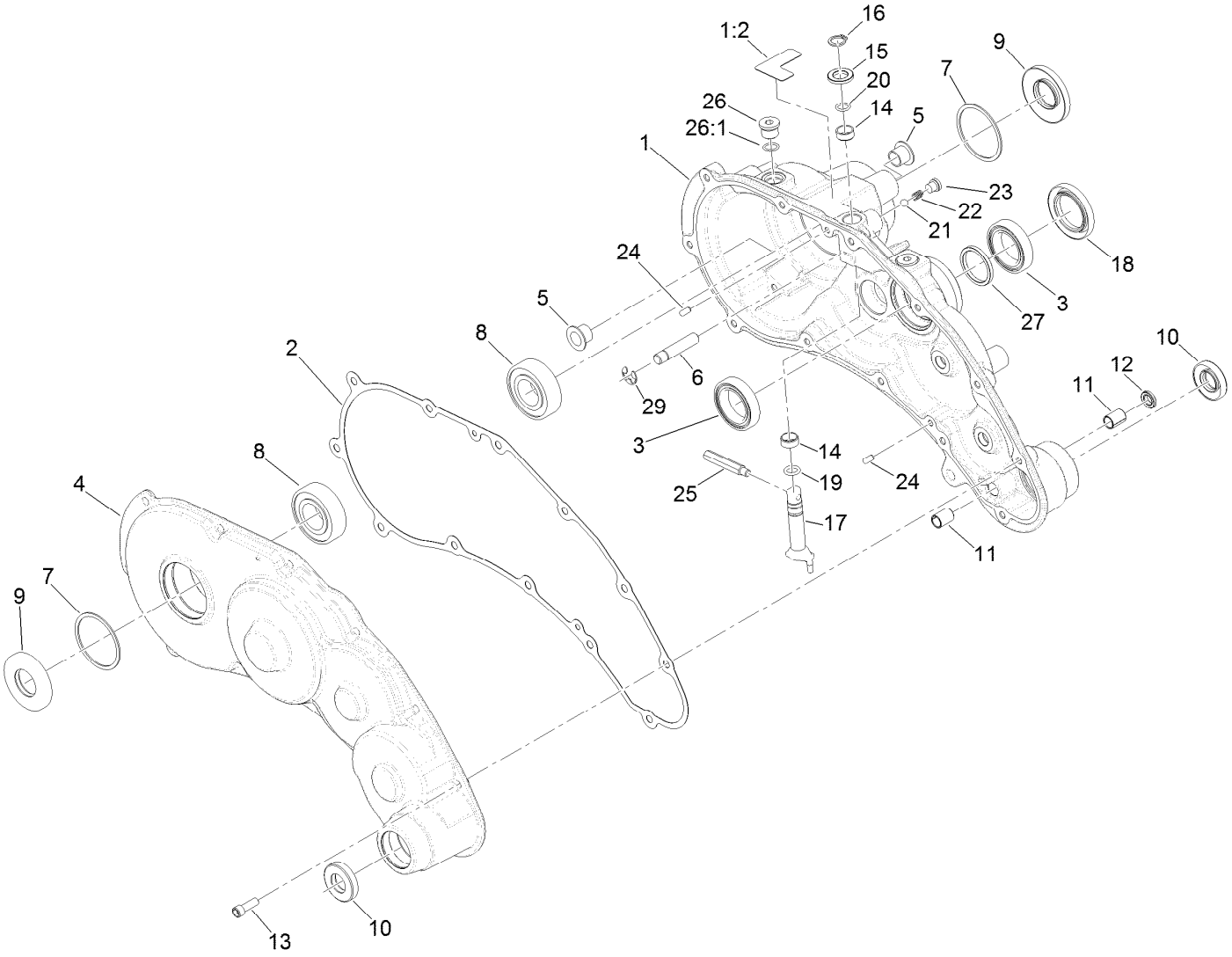

Transmission Gearbox Assembly No. 140-9324
Transmission Case Assembly

Ref.	Part Number	Qty.	Description
1	139-4306	1	Transmission Housing ASM
1:2	138-1644	1	Decal-Release, Traction
2	132-4551	1	Gasket-Transmission
3	121-9281	2	Bearing-Ball
4	138-1603	1	Transmission Cover ASM
5	125-5239	2	Bushing-Flange
6	133-9122	1	Pin-Mount, Brake
7	32151-92	2	Ring-Retaining
8	251-82	2	Bearing-Ball
9	133-9075	2	Seal-Oil
10	130-9463	2	Seal-Oil
11	131-3038	2	Bushing-Sleeve
12	131-3126	1	Seal-Oil
13	140-9233	12	Screw-HSH
14	121-4738	2	Bushing-Straight

Ref.	Part Number	Qty.	Description
15	108-5059	1	Spacer-Bushing
16	32151-61	1	Ring-Retaining
17	130-6816	1	Shaft-Selector, Traction
18	140-9325	1	Seal-Grease, High Temp
19	131-1879	1	O-Ring Seal
20	237-22	1	O-Ring
21	105-2442	1	Ball-Detent
22	105-2443	1	Spring-Detent
23	131-1825	2	Plug-ORB
24	121-9249	2	Pin-Dowel
25	133-9149	1	Pin-Groomer
26	353-989	2	Plug-Hex, Hollow
26:1	237-42	1	O-Ring
27	138-1496	1	Spacer
29	105-7004	1	E-Ring

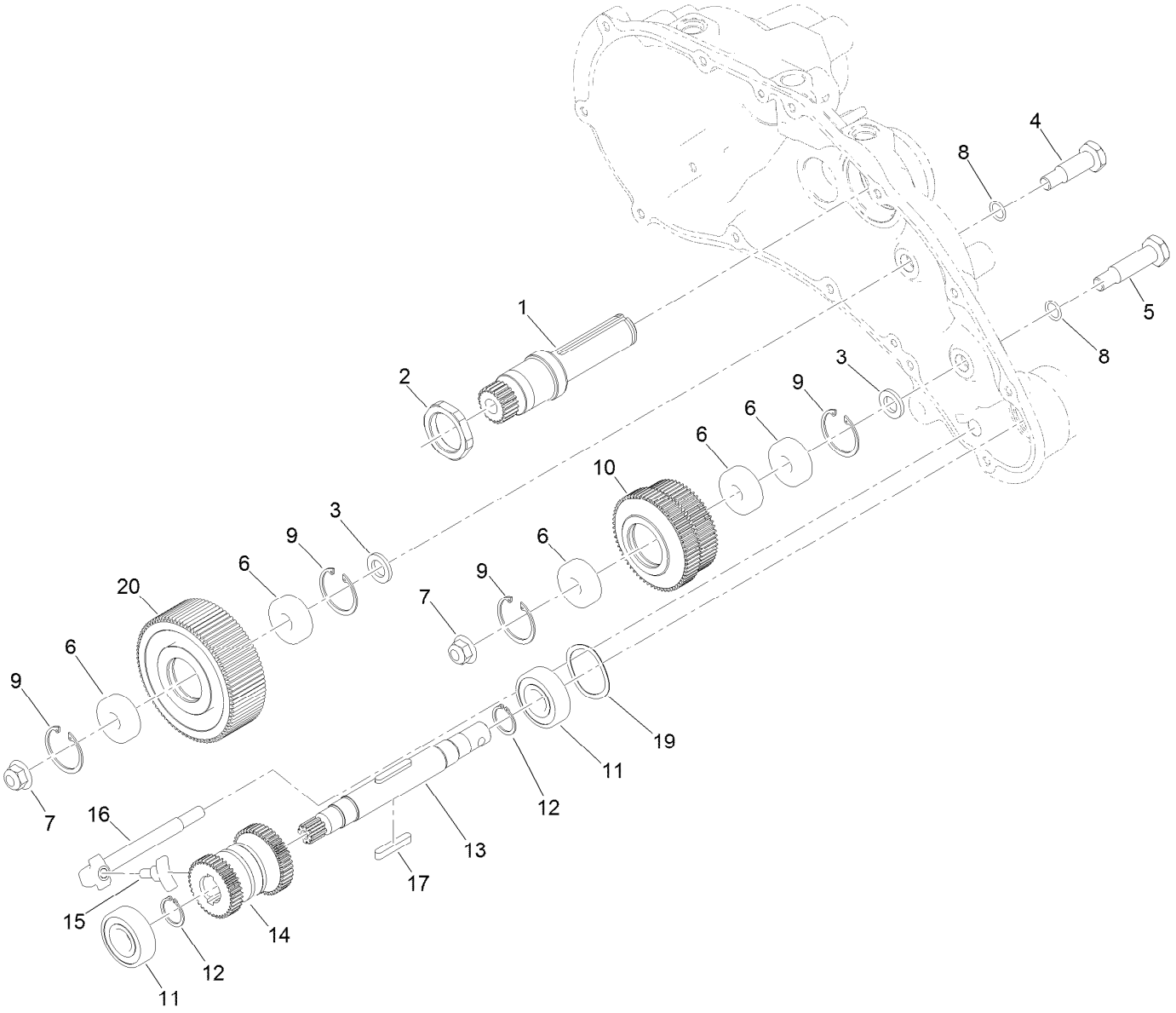

Transmission Gearbox Assembly No. 140-9324
Reel Drive Assembly

Ref.	*Part Number*	*Qty.*	*Description*
1	138-1509	1	Shaft-Input, 22T
2	138-1495	1	Nut-Lock, Thin
3	133-4553	2	Spacer-Bearing
4	133-4558	1	Pin-Bearing, Short
5	133-4557	1	Pin-Bearing, Long
6	49-2410	5	Bearing-Ball
7	104-8301	2	Nut-HF, NI
8	80-8460	2	O-Ring
9	138-1506	4	Ring-Retaining, Int (32MM)
10	137-0272	1	Gear-Spur, 60T/65T

Ref.	*Part Number*	*Qty.*	*Description*
11	38-7820	2	Bearing-Ball
12	138-1629	2	Ring-Retaining, EXT (17MM)
13	139-4359	1	Shaft-Drive, Reel
14	130-6834	1	Gear-Spur, Slider
15	133-9120	1	Shoe-Clutch, Reel
16	133-9121	1	Actuator-Clutch, Reel
17	103-2739	2	Key
19	131-3170	1	Spring-Wave
20	137-0273	1	Gear-Spur, 85T

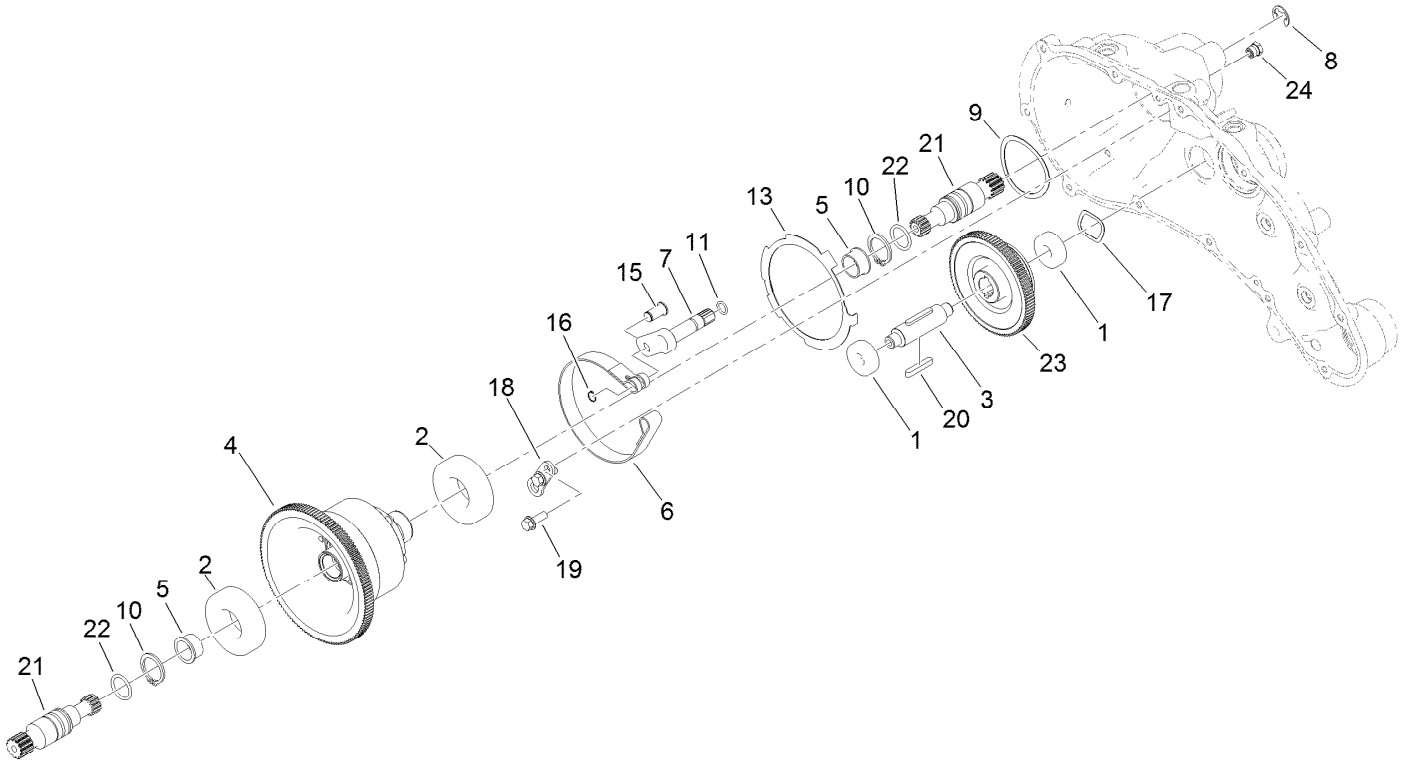

Transmission Gearbox Assembly No. 140-9324
Traction Drive Assembly

Ref.	*Part Number*	*Qty.*	*Description*
1	49-2410	2	Bearing-Ball
2	251-312	2	Bearing-Ball
3	137-0236	1	Shaft-Slider, Neutral
4	132-4555	1	Differential ASM
5	256-252	2	Bearing-Flange
6	140-9277	1	Band-Brake
7	132-4550	1	Lever-Brake
8	32120-47	1	Ring-Retaining, External
9	115-5258	1	Spring-Wire, Flat
10	32151-36	2	Ring-Retaining
11	237-22	1	O-Ring

Ref.	*Part Number*	*Qty.*	*Description*
13	140-9236	1	Plate-Retainer, Brake
15	120-9687	1	Pin-Clevis, Brake
16	32120-46	1	Ring-Retaining
17	112-5163	1	Washer-Wave
18	140-9279	1	Plate-Retainer, Pin
19	119-1138	2	Screw-HHF
20	103-2739	2	Key
21	130-6841	2	Shaft-Differential
22	237-159	2	O-Ring
23	137-0276	1	Gear-Spur, Neutral (93T)
24	133-4589	1	Fitting-Plug

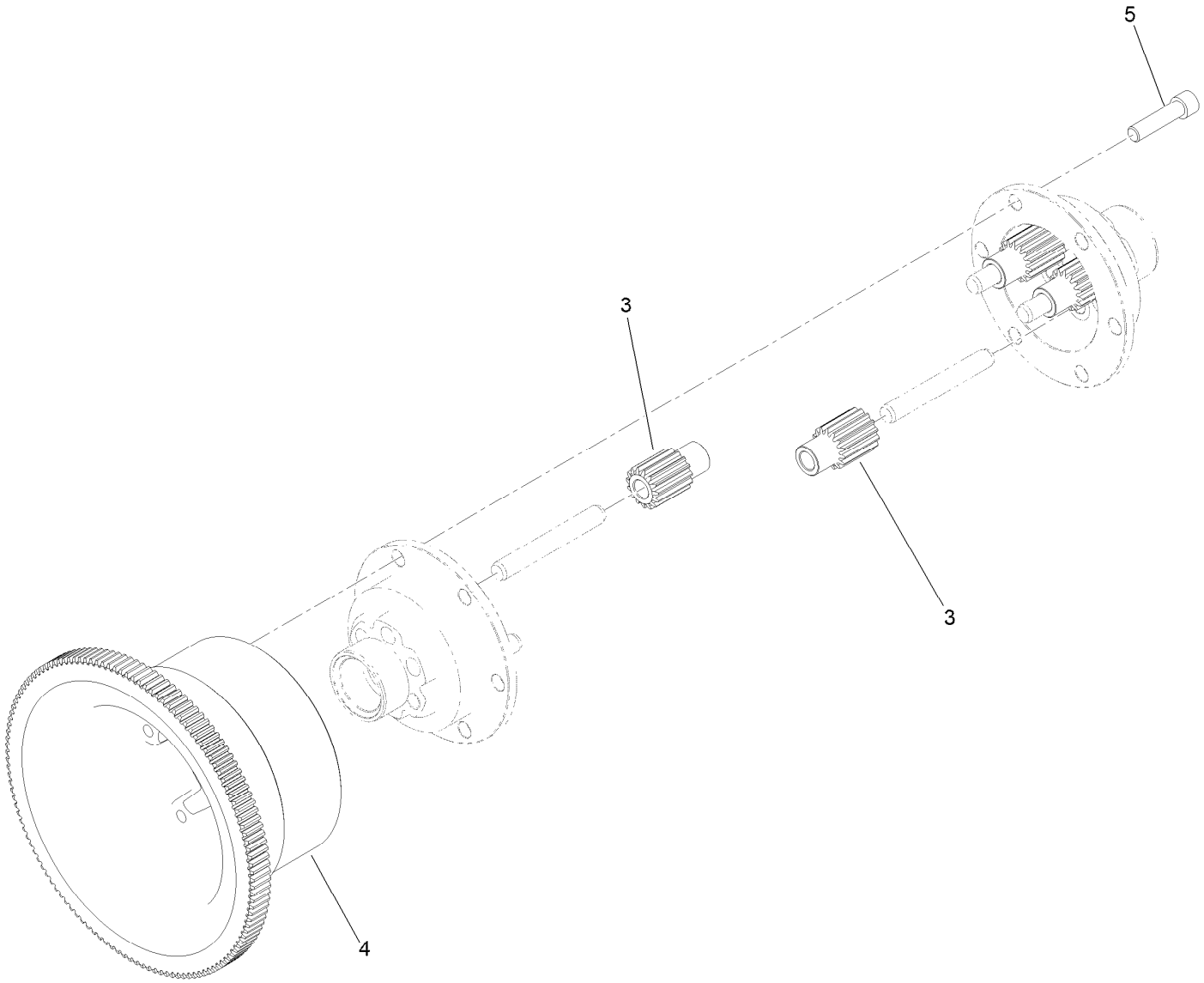

Differential Assembly No. 132-4555

Ref.	*Part Number*	*Qty.*	*Description*
3	130-6840	6	Gear-Spur, Differential
4	137-0294	1	Gear-Differential, 127T
5	3274-26	6	Screw-HSH

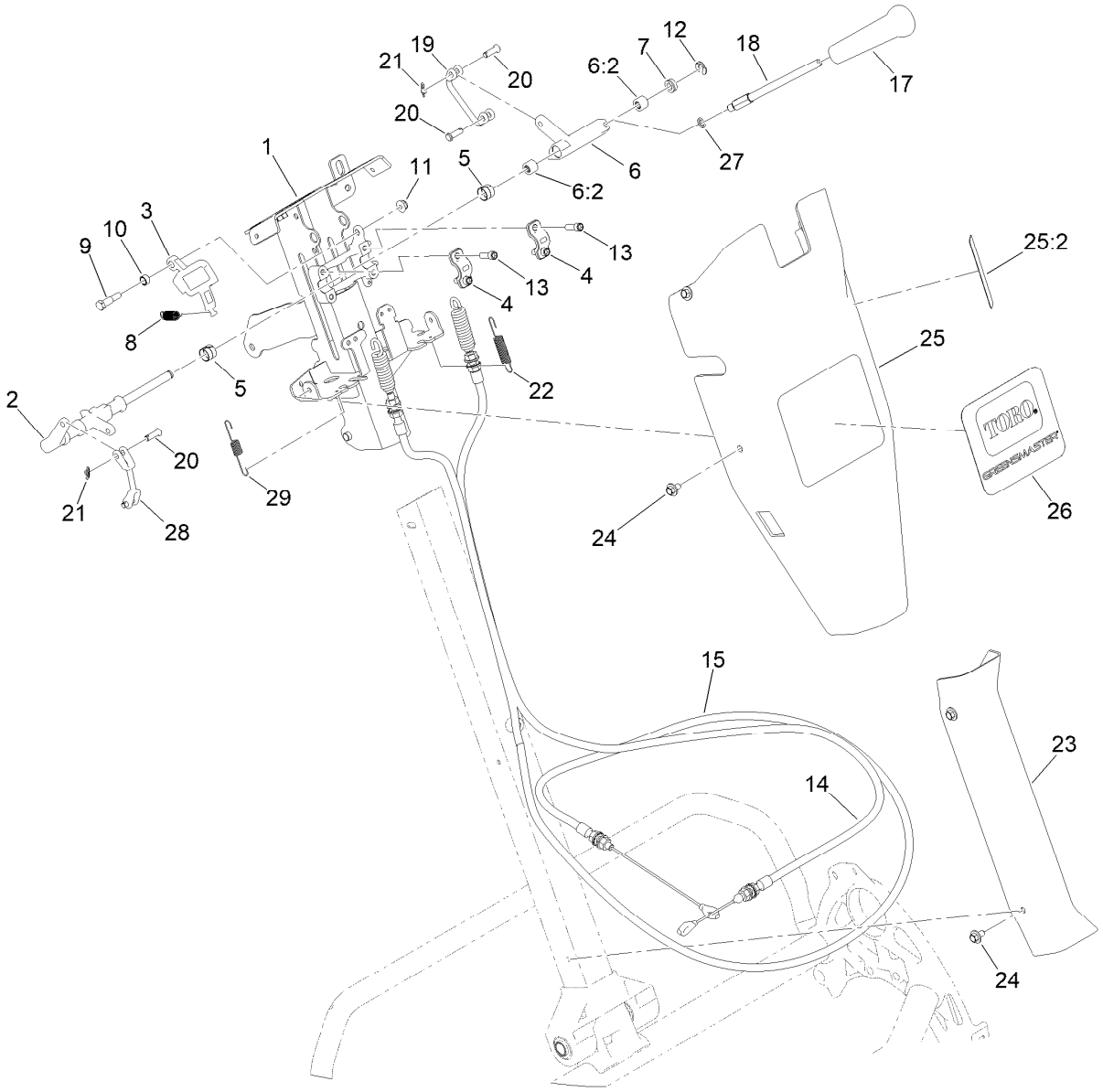

Reel Controls and Covers Assembly

Ref.	Part Number	Qty.	Description
1	147-2288	1	Kit- Upper Receiver Replacement
2	140-9305	1	Shaft-Main, Controls
3	137-0266	1	Cam-Latch, Upper
4	138-1513	2	Clamp-Shaft, Control
5	137-0263	2	Bushing-Split
6	137-0312	1	Reel Lever ASM
6:2	138-1637	2	Bearing-Needle
7	131-3187	1	Seal-V-Ring
8	140-3410	1	Spring-Extension
9	137-0313	1	Screw-Shoulder
10	137-0346	1	Spacer-Latch, Bail
11	104-7201	1	Nut-HF, NI
12	32151-47	1	Ring-Retaining
13	140-9233	4	Screw-HSH
14	137-0180	1	Cable-Clutch

Ref.	Part Number	Qty.	Description
15	140-9330	1	Cable-Reel Engagement
17	104-9760	1	Knob-Black
18	137-0190	1	Rod-Handle, Reel Lever
19	137-0232	1	Connector-Clevis
20	1-808265	4	Pin-Clevis
21	138-1587	2	Clip-Pin, Cotter
22	138-1536	1	Spring-Extension
23	138-1479	1	Cover-Handle, Lower
24	46-6810	8	Screw And Washer ASM
25	139-4304	1	Control Upper Cover ASM
25:2	138-1589	1	Decal-Reel Drive Engagement
26	138-1581	1	Decal-Greensmaster 1026
27	75-5470	1	Spacer-Bearing
28	138-1592	1	Connector-Clevis
29	140-3417	1	Spring-Extension

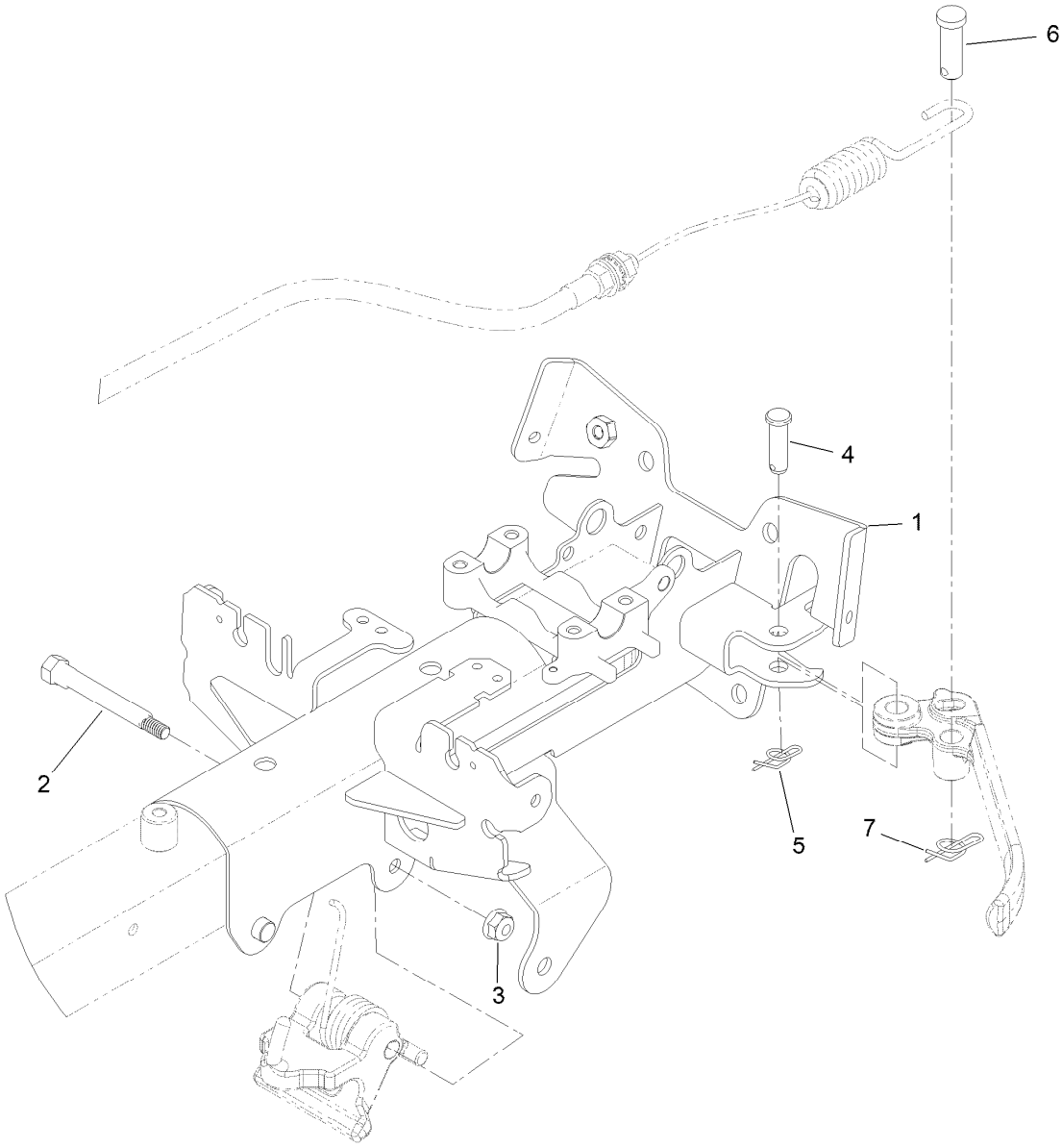

Upper Receiver Assembly No. 147-2288

Ref.	*Part Number*	*Qty.*	*Description*
1	147-2284-0P	1	Upper Receiver, Welded
2	147-2269	1	Cam-Handle, Pivot
3	119-4040	1	Nut-HF, NI
4	283-61	1	Pin-Yoke
5	116-6639	1	Pin-Cotter, Locking
6	1-808285	1	Pin-Clevis
7	140-9312	1	Pin-Cotter, Locking

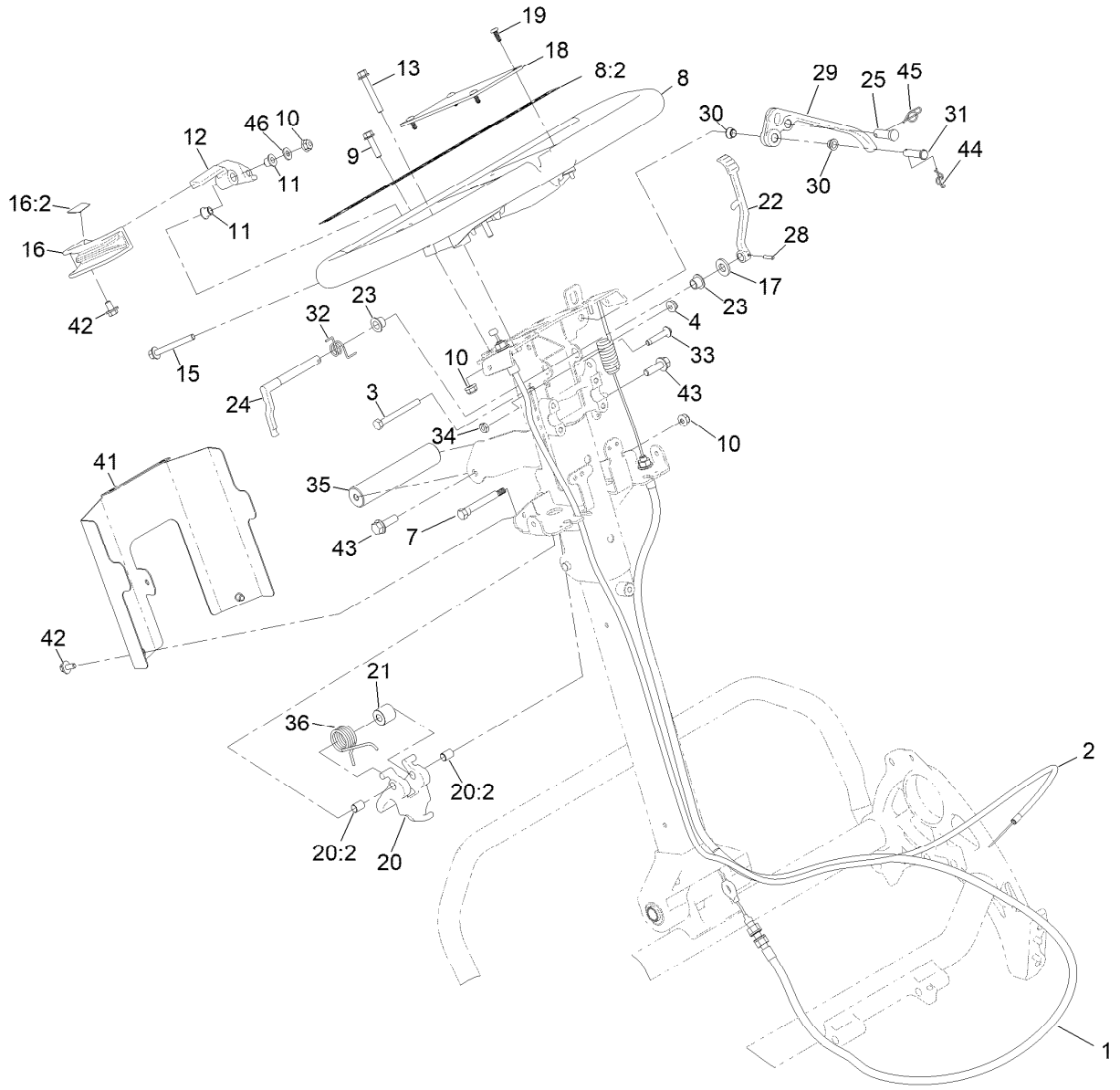

Upper Handle Assembly

Ref.	Part Number	Qty.	Description
1	140-9318	1	Cable ASM, Brake
2	137-0182	1	Cable-Throttle
3	321-15	1	Screw-HH
4	104-7201	1	Nut-HF, NI
7	147-2269	1	Cam-Handle, Pivot
8	138-1645	1	Handle ASM
8:2	138-5532	1	Decal-Warning, General
9	120-4654	2	Screw-HHF
10	119-4040	4	Nut-HF, NI
11	138-3538	2	Bushing-Flange
12	138-1636	1	Arm-Throttle
13	138-5527	1	Screw-HHF
15	140-9317	1	Screw-HHF,Lock
16	139-4303	1	Throttle Lever ASM
16:2	138-5534	1	Decal-Throttle
17	100-4852	1	Washer-Hardened
18	138-5514	1	Plate-Notepad, Handle
19	127-6843	4	Screw-Plastite, Torx Pan
20	137-0317	1	Handle Adjuster ASM
20:2	137-0308	2	Bushing-Igus

Ref.	Part Number	Qty.	Description
21	140-9335	1	Spacer-Spring
22	140-3377	1	Lever-Lock, Brake
23	138-1514	2	Bushing-Flange
24	138-1573	1	Latch-Brake
25	1-808285	1	Pin-Clevis
28	32121-73	1	Pin-Roll
29	140-9298	1	Lever-Brake
30	138-5538	2	Bushing-Flange
31	283-6	1	Pin-Clevis
32	138-1518	1	Spring-Brake, Torsion
33	132-6777	1	Screw-Twh Thd Roll
34	120-9695	1	Nut-Jam
35	138-1535	1	Handle-Assist, Lift
36	140-9334	1	Spring-Handle, Torsion
41	138-5530-03	1	Cover-Bottom, Controls
42	46-6810	3	Screw And Washer ASM
43	115-5142	2	Screw-HHF
44	116-6639	1	Pin-Cotter, Locking
45	140-9312	1	Pin-Cotter, Locking
46	139-1323	2	Washer-Spcl

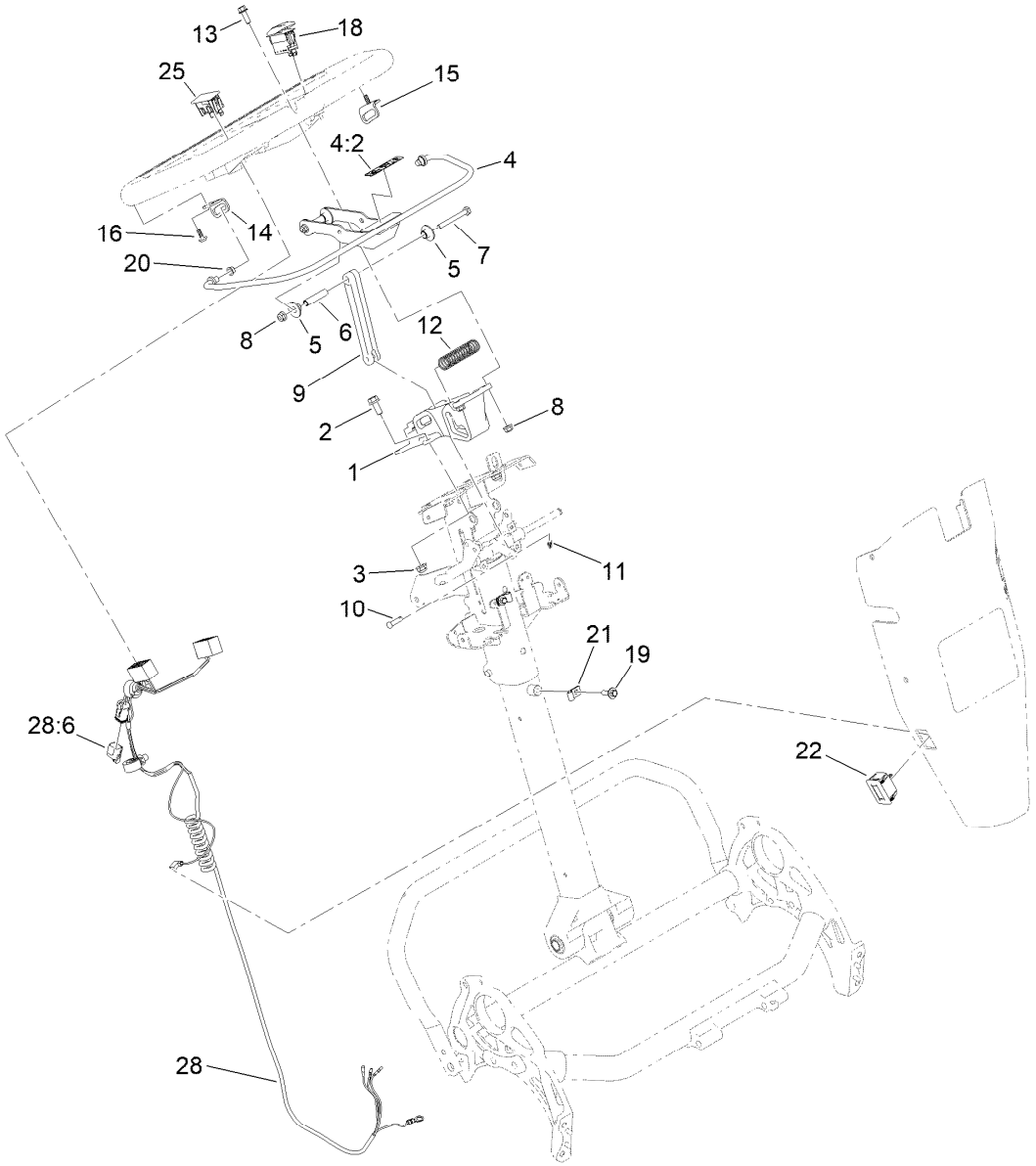

Traction Bail Assembly

Ref.	Part Number	Qty.	Description
1	138-5524	1	Mount-Handle
2	3234-47	2	Screw-HHF
3	119-4041	2	Nut-HF
4	139-4302	1	Clutch Bail ASM
4:2	138-5533	1	Decal-Bail, Traction
5	138-3466	4	Bushing-Flange
6	138-3465	2	Spacer-Tube
7	321-18	2	Screw-HH
8	119-4040	4	Nut-HF, NI
9	138-5515	1	Link-Bail, Clutch
10	353-322	1	Pin-Clevis
11	138-1587	1	Clip-Pin, Cotter
12	138-3468	1	Spring-Compression

Ref.	Part Number	Qty.	Description
13	120-9678	2	Screw-HHF
14	138-3539	1	Bracket-Bail, RH
15	138-3540	1	Bracket-Bail, LH
16	138-5775	2	Screw-Delta Point
18	122-1497	1	Switch-Rocker, On-None-Off
19	46-6811	2	Screw-Thd Roll Sems
20	138-5538	2	Bushing-Flange
21	2412-91	2	Clamp
22	119-1347	1	Meter-Hour
25	119-7791	1	Plug-Hole
28	122-1416	1	Harness-Wire
28:6	32180-091	1	Cap-Dust, 2 Way

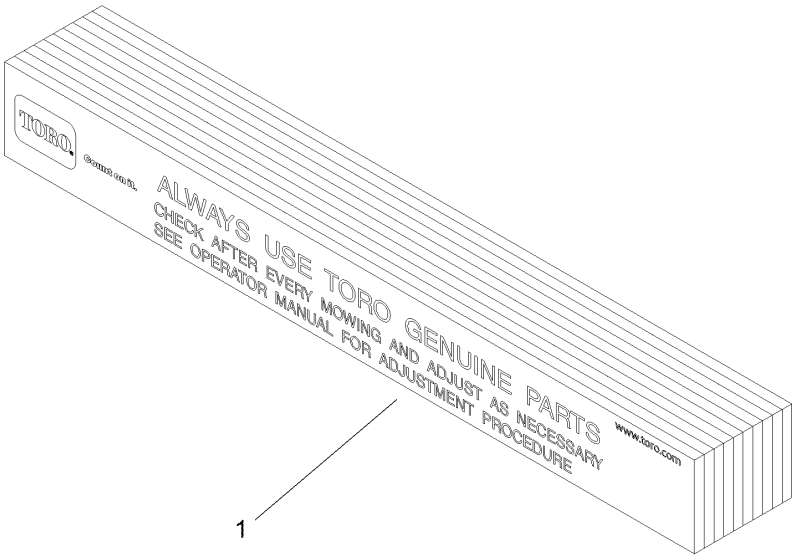

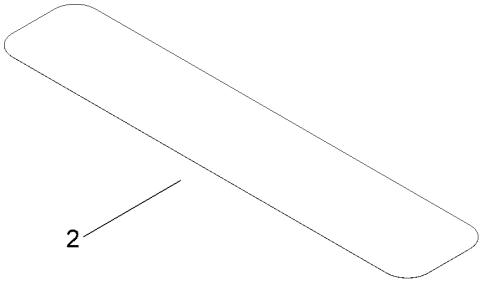

Miscellaneous Parts Assembly

Ref.	*Part Number*	*Qty.*	*Description*
1	125-5610	1	Paper-Reel, Toro (10 Pack)
2	140-5531	1	Shim-Toro Reel (.002In)

Attachments and Accessories

For 04840 Greensmaster 1026 Mower

Product Name	Model/Part
8-Blade 26in Fixed EDGESERIES CU	04842
11-Blade 26in Fixed EDGESERIES CU	04843
Split Full 26in Roller	04127
Split Wiehle 26in Roller	04137
26in Extended Wiehle Roller (2019+)	04146
26in Interlace Narrow Wiehle Roller Asm	04806
26in Full Front Roller Asm	04816
26in Wide Wiehle Roller Asm	04826
26in Interlaced Roller Scraper Asm	139-4394
26in Full Roller Scraper Asm	139-4398
26in Smooth Roller Scraper Brush Asm	139-5117
26in Interlaced Roller Scraper Brush Asm	139-5125
26in Wide Wiehle Roller Scraper Asm	139-7406
Wide Wiehle Roller Scraper Brush Asm	139-7410
Universal Groomer Drive	04707
26in Stiff Grooming Brush	04276
26in Twin Tip Groomer Reel	04803
26in Stiff Grooming Brush Kit	127-1549
Roller Extension Kit	115-7361
Access Backlap Kit	139-4342
Extended HOC Arm	99-4286
Bedbar-26in	138-1522-01
Bedknife-Highcut	104-2646
Bedknife-Fairway	107-8181
Bedknife-Micro-Cut	112-9275
Bedknife-EDGEMAX, Tournament Cut	117-1548
Bedknife-EDGEMAX, 26in Microcut Short	139-4322
Bedknife-EDGEMAX, 26in Tournament Short	139-4323
Bedknife-EDGEMAX, 26in Microcut	139-4324
Bedknife-1/8in	93-9015
Bedknife-Tournament Cut	94-5885
Blade-GR Groomer, Twin Tip (0.032in)	140-5580
Blade-GR Groomer, Helix (0.028in)	140-5581
Blade-GR Groomer, Helix (0.015"in)	140-5582
Wheel Kit	04123
Light Kit (2019+)	04135
Push Broom Kit, Walk Greensmower (2019+)	04136
CU Light Kit Mount	04138
Backlap Kit	04800
Wireless Hour Meter Kit	139-4369
MVP Kit-Cutting Unit Re-Build	121-2637
Premium Engine Oil 10w30 (55 Gallon Drum)	121-6392
Premium Engine Oil 10w30 (5 Gallon Pail)	121-6393
Grease-Synthetic	136-8595
Turf Evaluator	04399
Toro Reel Paper (10 Pack)	125-5610

Attachments and Accessories (continued)

Angle Indicator..... 131-6828
Angle Indicator Mount..... 131-6829
Shim-TORO Reel (.002in) 140-5531
Height-of-Cut Bar..... 94-9010
Trans Pro 80 Tow-Behind Trailer..... 04238
Flat Ramp 04245
Rail Ramp Kit (Update)..... 04247

Notes:



Count on it.