FORM NO. 3311-881

TORO®

MODEL NO. 30790 – 20001 & UP
MODEL NO. 30562 – 20001 & UP
MODEL NO. 30555 – 20001 & UP

PARTS CATALOG

GROUNDSMASTER® 62 TWIN

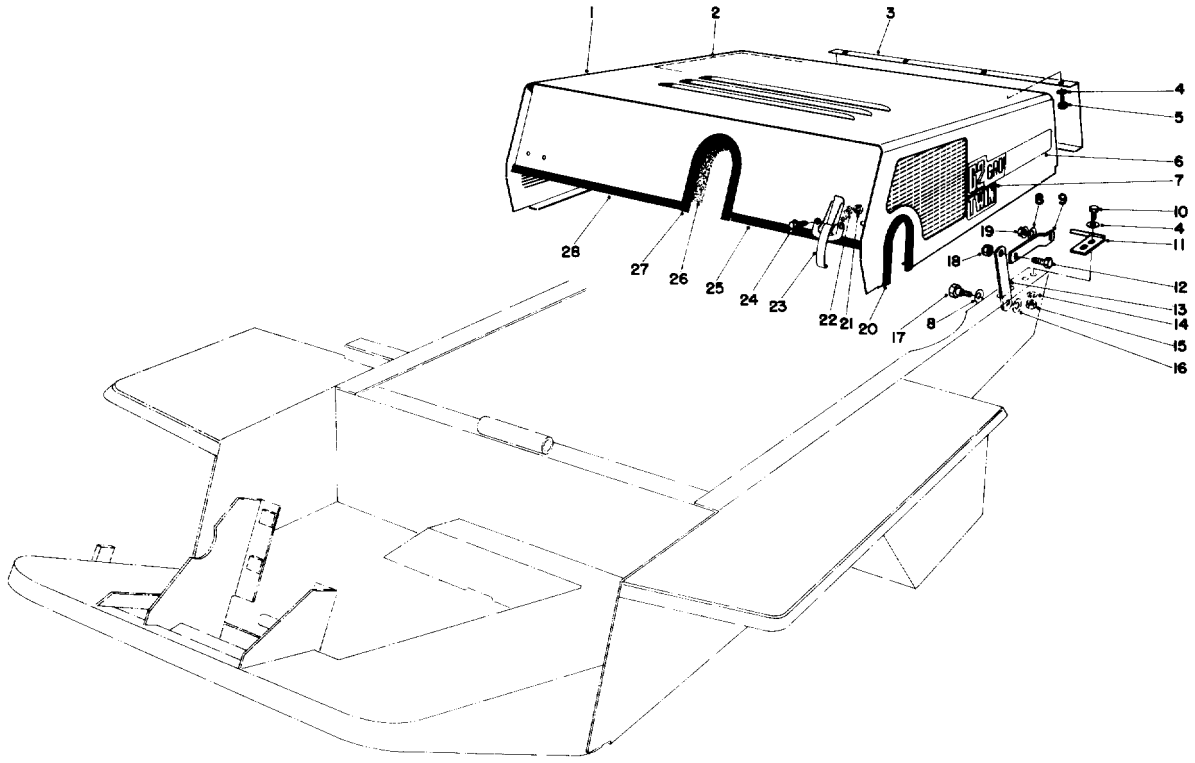

HOOD ASSEMBLY

Ref. No.	Part No.	Description	No. Used
1	44-9180	Hood	1
2	44-9040	Foam Strip – Hood (Rear)	1
3	44-8830	Grille – Rear Panel	1
4	3256-22	Washer	12
5	32140-16	Screw – Self Tapping Hex. Hd.	8
6	44-9360	Decal – GM-62	2
7	44-9210	Decal – Twin	2
8	3290-211	Washer – Lock Spring	4
9	27-6800	Link – Hood	2
10	321-4	Capscrew	4
11	27-4830	Pivot Pin L.H.	1
*	27-4800	Pivot Pin R.H.	1
12	3211-27	Screw – Cap Hex Hd.	2
13	27-6810	Tie – Hood	2
14	3253-3	Washer – Lock Spring	4

Ref. No.	Part No.	Description	No. Used
15	3217-5	Nut – Hex	4
16	4-2390	Washer	2
17	19-1470	Shoulder Screw	2
18	3296-5	Nut – Lock	2
19	32128-19	Nut – Flange	2
20	44-9190	Hood Trim	1
21	3217-26	Nut – Hex	4
22	3253-17	Washer – Lock	4
23	249-21	Latch	2
24	3290-144	Screw – Machine Hex Slotted Hd.	4
25	46-3320	Hood Trim	1
26	44-9030	Foam Strip – Hood (Front)	1
27	38-4070	Hood Trim	1
28	38-4080	Hood Trim	1

*Not Illustrated

COPYRIGHT © ALL RIGHTS RESERVED
The Toro Company – 1982

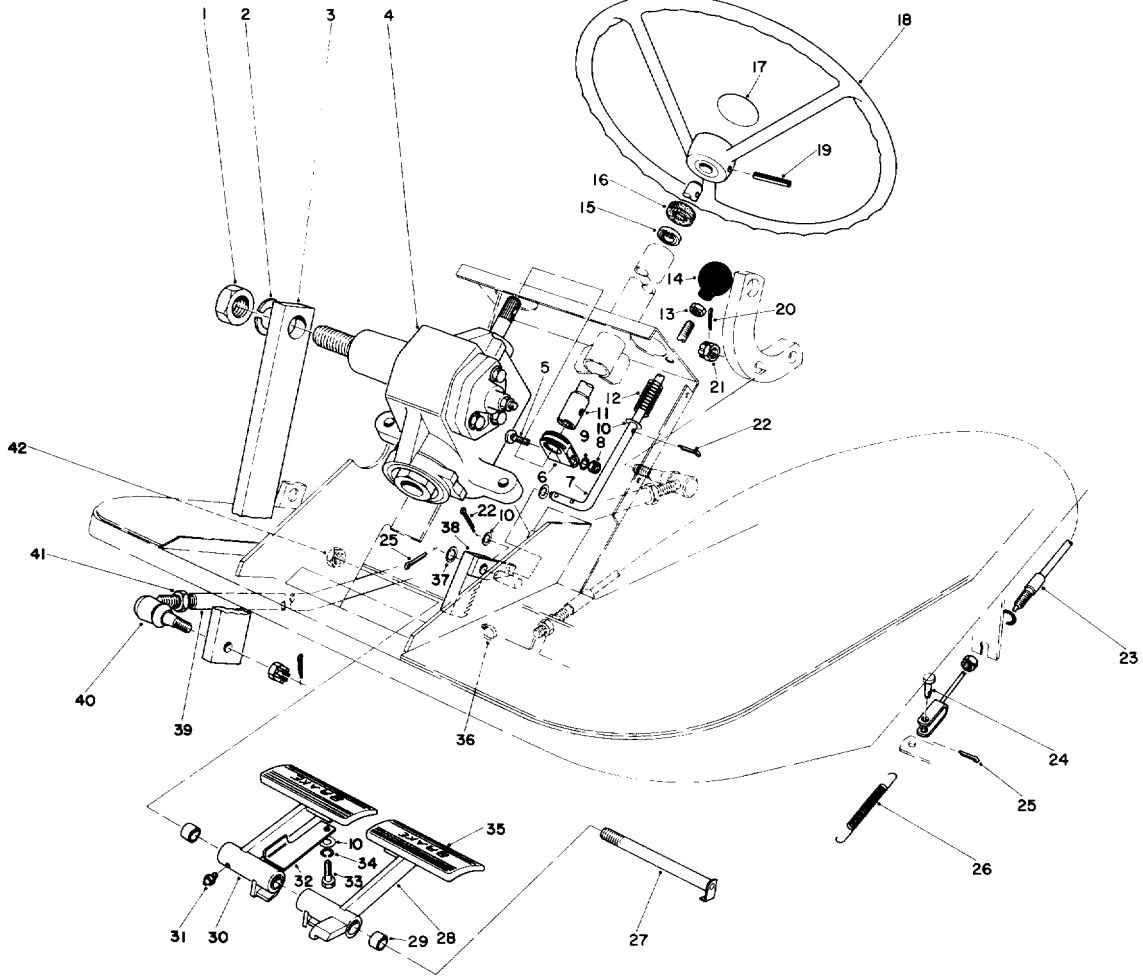

PEDALS AND STEERING WHEEL ASSEMBLY

Ref. No.	Part No.	Description	No. Used
1	3220-8	Nut	1
2	3253-28	Lockwasher	1
3	41-8880	Arm – Gear Box	1
4	41-8820	Steering Gear Assembly	1
5	3232-16	Bolt – Carriage	1
6	41-8830	Clamp – Coupling	1
7	27-3550	Rod – Brake Latch	1
8	3217-8	Nut – Hex	1
9	3253-6	Washer – Lock, Spring	1
10	3256-22	Washer – Plain Flat	4
11	41-8840	Steering Shaft	1
12	3-3251	Spring	1
13	3217-5	Nut – Hex	1
14	233-17	Knob	1
15	251-275	Bearing – Ball	1
16	21-9260	Dust Cover	1
17	24-2090	Cap – Steering Wheel	1
18	25-6260	Steering Wheel	1
19	32121-10	Pin – Roll	1
20	3272-7	Cotter Pin	2
21	32136-4	Slotted Nut	2
22	3272-5	Pin – Cotter	3
23	21-3370	Brake Cable Assembly	2

Ref. No.	Part No.	Description	No. Used
24	283-30	Pin – Clevis	2
25	3272-10	Pin – Cotter	3
26	3-7243	Spring – Return	2
27	42-2540	Pin – Brake	1
28	41-8810	Brake Pedal L.H. (Incl. Ref. #29 & 31)	1
29	256-42	Bushing	4
30	41-8800	Brake Pedal R.H. (Incl. Ref. #29 & 31)	1
31	302-5	Grease Fitting	2
32	27-3560	Latch – Parking Brake	1
33	329-4	Screw – Cap, Hex Hd.	1
34	3253-3	Washer – Lock Spring	1
35	7-3900	Foot Pad – Brake	2
36	3290-378	Plastic Ty-On	1
37	3256-26	Washer – Plain Flat	2
38	42-3220	Rack	1
39	27-3390	Tube – Front Steering	1
40	21-0140	Socket Assembly R.H. (Incl. Ref. #21)	2
41	3220-5	Nut – Hex Jam	2
42	3296-33	Nut – Lock, Nylon Insert	1

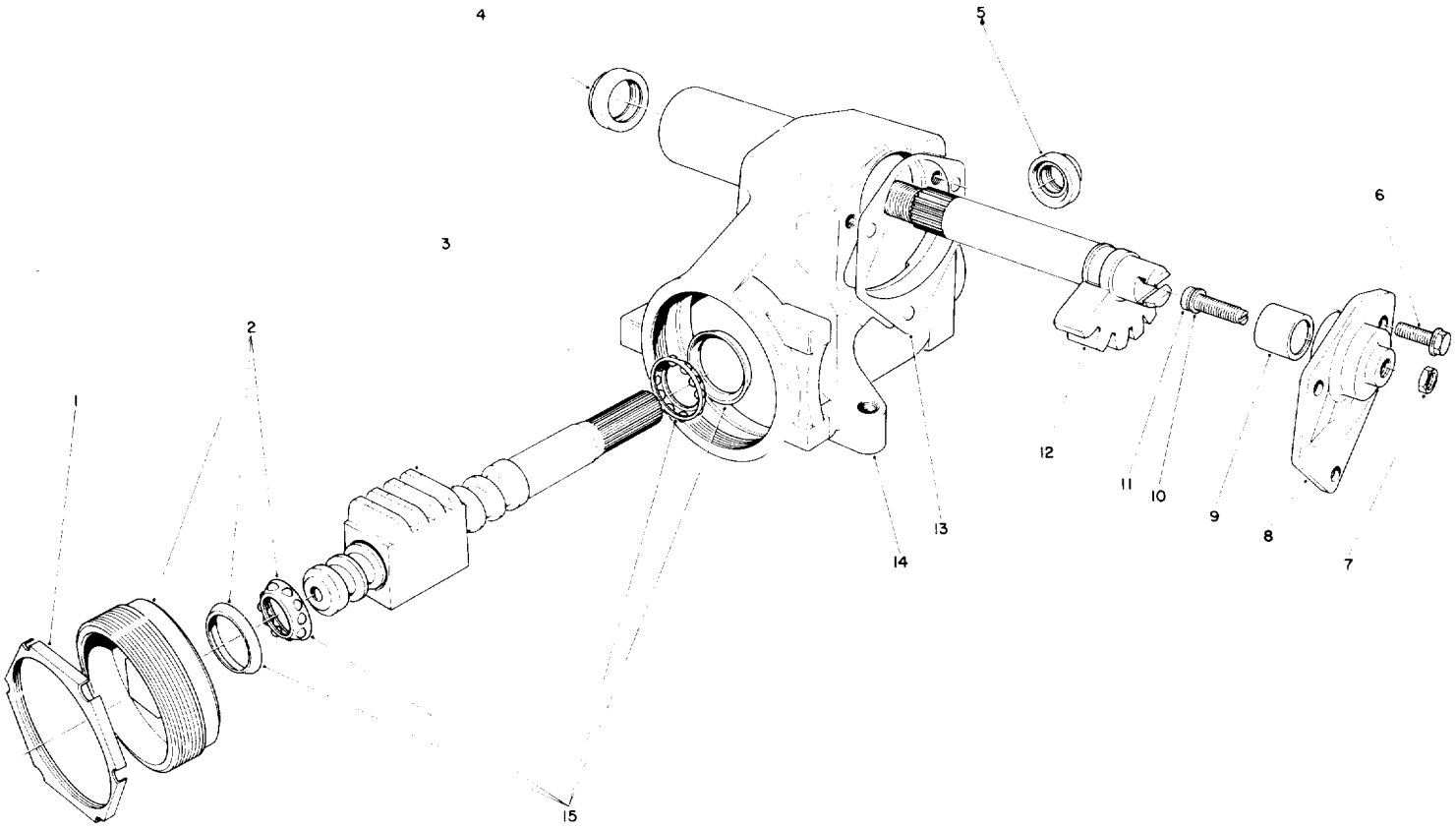

STEERING GEAR ASSEMBLY NO. 41-8820

Ref. No.	Part No.	Description	No. Used
1	5676217	Nut – Adjuster Lock	1
2	5666681	Adjuster Assembly	1
3	7812946	Worm Assembly – Steering	1
4	7801626	Seal	1
5	7802160	Seal	1
6	7807009	Hex Head Flange Bolt	3
7	114495	Nut	1
8	7806748	Side Cover Service Kit (Incl. Ref. #6, 9, 11 & 13)	1

Ref. No.	Part No.	Description	No. Used
9		Bushing	1
10	605142	Shim Kit	1
11	7802482	Adjuster	1
12	7812834	Gear – Pitman Shaft	1
13	5666734	Gasket	1
14	5679292	Steering Gear Housing	1
15	5666693	Bearing Assembly – Worm Thrust	1

Note: Obtain parts from your local GMC, Chevrolet Dealer.

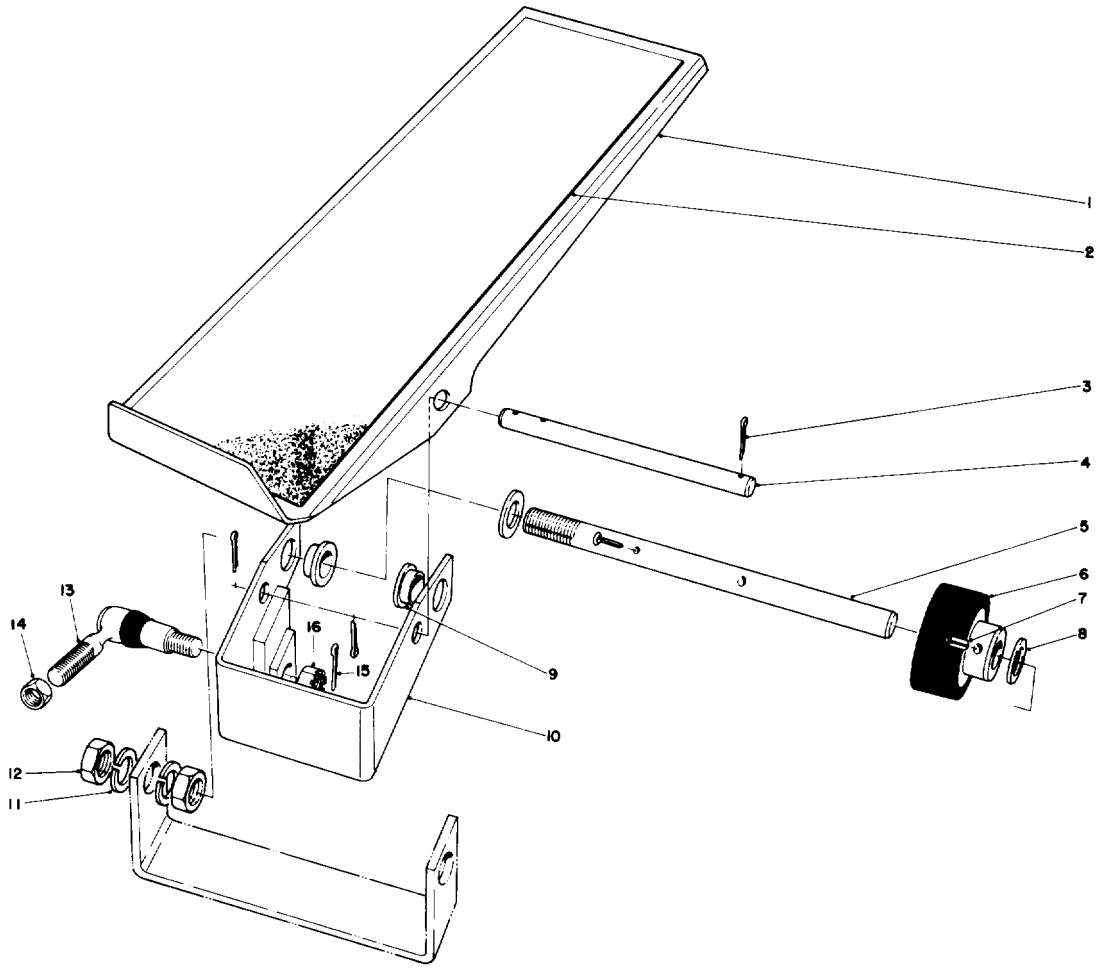

TRACTION PEDAL ASSEMBLY

Ref. No.	Part No.	Description	No. Used
1	29-5670	Traction Pedal	1
2	28-5130	Pad Pedal	1
3	3272-10	Cotter Pin	4
4	29-5630	Pivot Pin Pedal	1
5	29-5640	Shaft – Traction Pedal	1
6	28-5220	Friction Wheel Assembly	1
7	32121-16	Roll Pin	1
8	5-7570	Washer	2
9	256-156	Bushing	2

Ref. No.	Part No.	Description	No. Used
10	29-5600	Pivot Bracket Assembly (Incl. Ref. #9)	1
11	3253-7	Lockwasher	2
12	3218-5	Jam Nut	2
13	21-0140	Socket Assembly R.H. (Incl. Ref. #16)	1
14	3220-5	Jam Nut	1
15	3272-7	Cotter Pin	1
16	32136-4	Slotted Nut	1

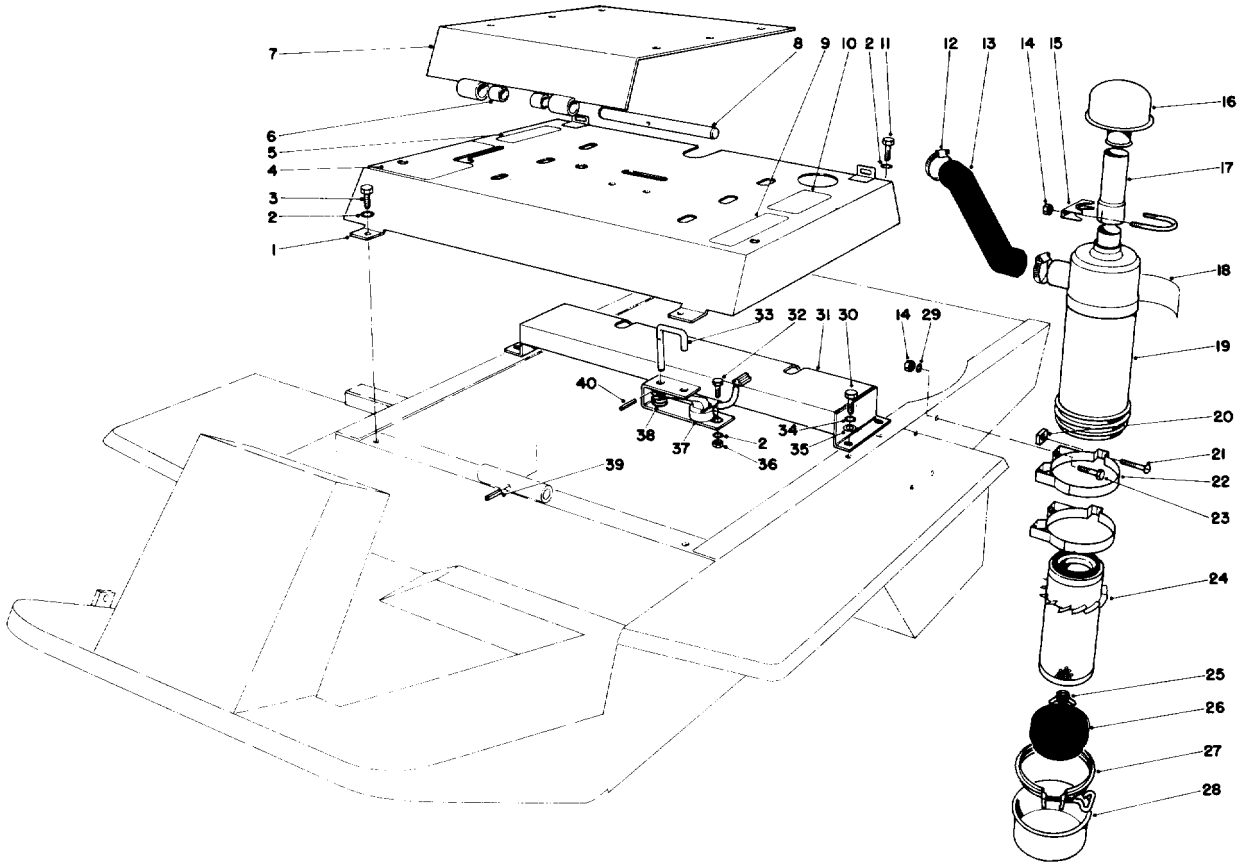

SEAT MOUNT AND AIR CLEANER ASSEMBLY

Ref. No.	Part No.	Description	No. Used
1	38-2470	Cover – Seat Support (Incl. Ref. #4, 5, 9 & 10)	1
2	3253-3	Washer – Lock Spring	5
3	32104-114	Screw – Self Tapping Hex. Hd.	2
4	27-4390	Decal – Hydraulic Lift	1
5	28-3290	Decal – Caution	1
6	256-173	Bushing	2
7	38-4020	Seat Mounting (Incl. Ref. #6)	1
8	27-4720	Shaft – Seat Pivot	1
9	27-4620	Decal – Caution	1
10	27-7310	Decal – Refueling	1
11	321-4	Capscrew	2
12	2412-42	Hose Clamp	2
13	44-9050	Hose – Air Cleaner Inlet	1
14	3217-6	Nut – Hex	6
15	20-4840	Muffler Clamp	1
16	27-7180	Cap Assembly	1
17	44-8950	Tube – Air Cleaner	1
18	27-7160	Decal – Instruction	1
19	27-7100	Air Cleaner Assembly (Incl. Ref. #18 & 24-28)	1
20	32107-11	Nut – Square	2

Ref. No.	Part No.	Description	No. Used
21	3258-19	Machine Screw	2
22	27-7170	Band Assembly Mounting (Incl. Ref. #20 & 21)	2
23	322-3	Screw – Cap Hex. Hd.	4
24	27-7110	Element Assembly	1
25	27-7120	Nut & Gasket Assembly	1
26	27-7140	Skirt – Baffle	1
27	27-7130	Clamp Assembly	1
28	27-7150	Cup Assembly	1
29	3253-4	Washer – Lock	4
30	323-5	Screw – Cap Hex Hd.	4
31	37-9770	Seat Support	1
32	321-2	Screw – Cap Hex. Hd.	1
33	38-3170	Pin – Seat Switch	1
34	3253-21	Washer – Lock	4
35	3256-24	Washer – Plain	4
36	3217-5	Nut – Hex	1
37	29-6930	Switch Arm	1
38	3-6685	Spring	1
39	32121-4	Pin – Roll	1
40	32121-50	Pin – Roll	1

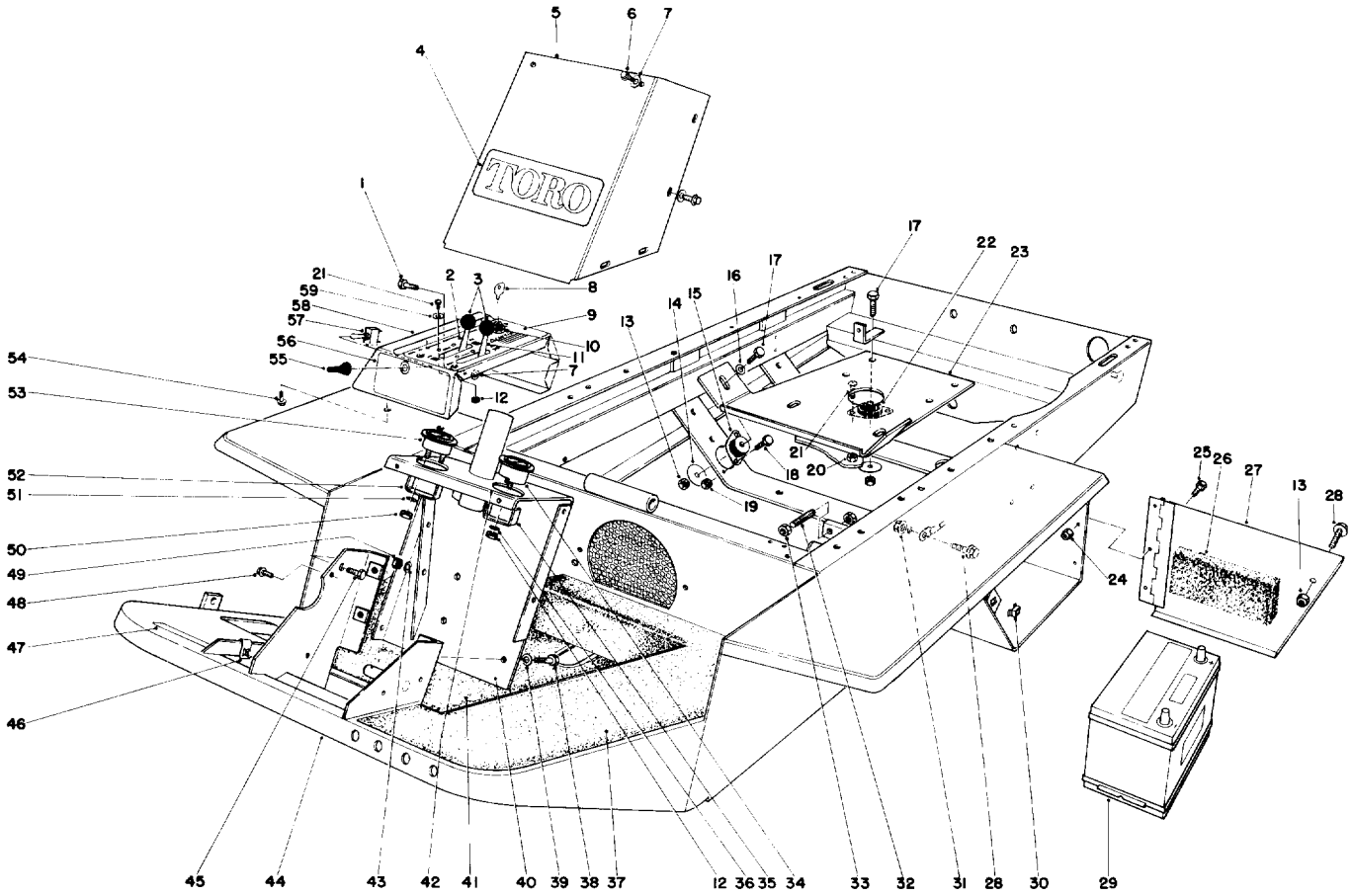

INSTRUMENT PANEL AND STEERING POST ASSEMBLY

Ref. No.	Part No.	Description	No. Used
1	321-4	Capscrew	1
2	44-9300	Control – Choke	1
3	233-35	Knob	2
4	43-5110	Decal – Toro	1
5	41-8900	Cover – Steering Tower	1
6	32104-114	Screw – Tapping Hex Hd.	11
7	3256-22	Washer – Plain Flat	12
8	218-412	Key (Set of 2)	1
9	44-9370	Decal – Instrument Panel	1
10	27-2360	Switch – Ignition	1
11	44-9250	Control Throttle	1
12	3217-26	Nut – Hex	5
13	3296-39	Nut – Lock Nylon Insert	5
14	28-1140	Washer	4
15	44-9390	Mount – Engine Rubber	2
16	3256-24	Washer – Plain Flat	2
17	323-12	Screw – Cap Hex Hd.	4
18	322-3	Capscrew	4
19	3296-29	Nut – Lock Nylon Insert	4
20	3296-2	Nut – Lock Nylon Insert	4
21	3251-3	Screw – Machine Rd. Hd.	8
22	18-8000	Rubber Mount	2
23	44-9320	Engine Base	1

Ref. No.	Part No.	Description	No. Used
24	3296-42	Nut – Lock Nylon Insert	3
25	321-2	Screw – Cap Hex Hd.	3
26	44-9460	Foam Strip – Battery Cover	1
27	44-8920	Battery Cover	1
28	3234-11	Screw – Cap Hex Hd. w/Locking Flange	2
29	44-9260	Battery Assy.	1
30	3290-433	Retainer – Grip Nut	1
31	3290-357	Nut – Hex Hd. w/Locking Flange	1
32	27-6940	Pin – Stop	1
33	3218-3	Nut – Hex, Jam	2
34	12-9990	Hour Meter	1
35	218-515	Mounting Bracket	1
36	3254-1	Washer – External Tooth	1
37	27-3250	Nonskid – Tunnel	1
38	324-6	Screw – Cap Hex Hd.	3
39	3253-6	Washer – Lock, Spring	3
40	42-2580	Steering Post Bracket	1
41	27-3260	Nonskid Floor	1
42	41-8910	Decal – Instruction	1
43	3253-21	Washer – Locker Spring	1
44	44-9170	Frame	1

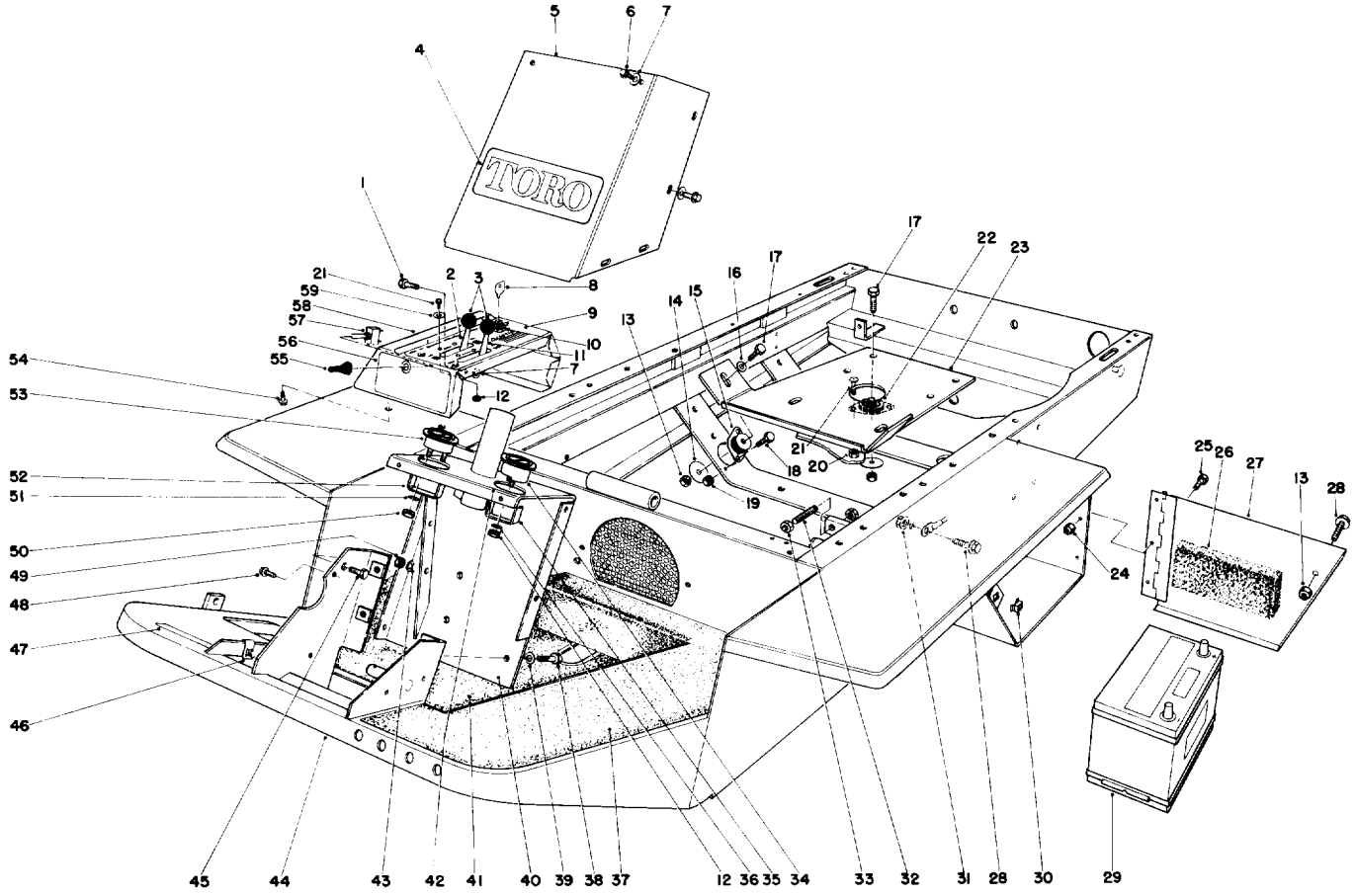

INSTRUMENT PANEL AND STEERING POST ASSEMBLY (Continued)

Ref. No.	Part No.	Description	No. Used
45	323-5	Screw – Cap, Hex Hd.	1
46	3290-192	Nut – Clip, U-Type	2
47	27-7320	Decal – Traction Pedal	1
48	32104-60	Screw – Self Tapping Hex Washer Hd.	1
49	3217-7	Nut – Hex	1
50	3219-14	Nut – Brass	6
51	3256-21	Lockwasher	2
52	39-9600	Mounting Clamp	1

Ref. No.	Part No.	Description	No. Used
53	33-0990	Ammeter	1
54	32104-116	Screw – Self Tapping Hex Washer Hd.	2
55	218-473	Boot – Toggle Switch	1
56	46-3460	Decal – By-Pass	1
57	6-1659	Switch – Toggle (Incl. Ref. #55)	1
58	46-3350	Instrument Panel	1
59	3253-17	Washer – Lock Spring	4

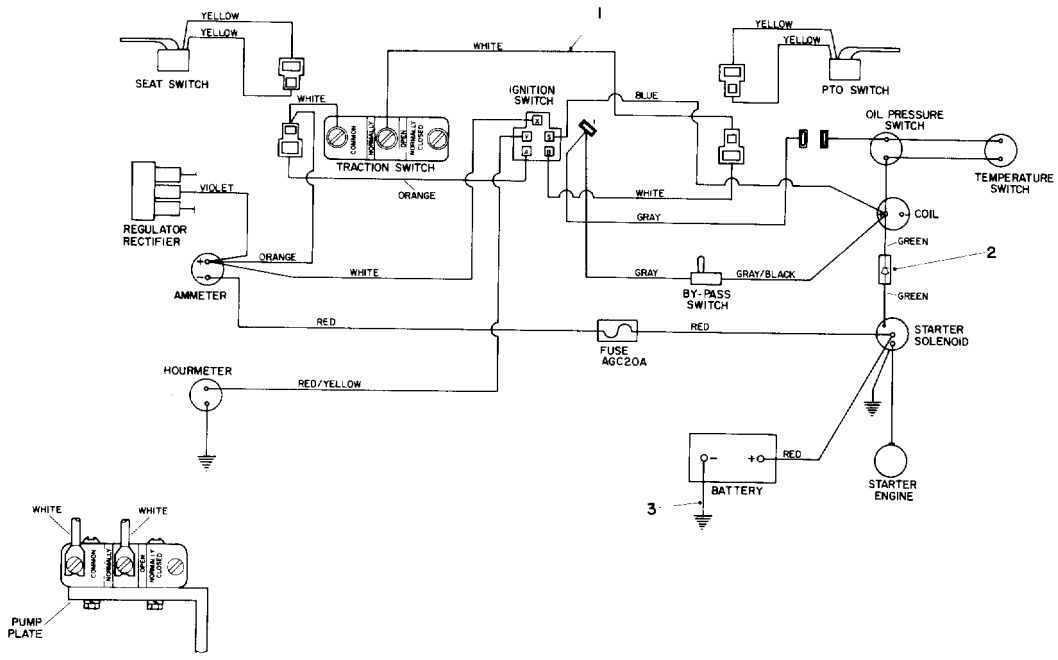

ELECTRICAL SCHEMATIC

Ref. No.	Part No.	Description	No. Used
1	44-9430	Wire Harness (Incl. Ref. # 2)	1
2	44-9930	Jumper Wire Ass'y	1

Ref. No.	Part No.	Description	No. Used
3	27-5090	Wire Battery Ground	1

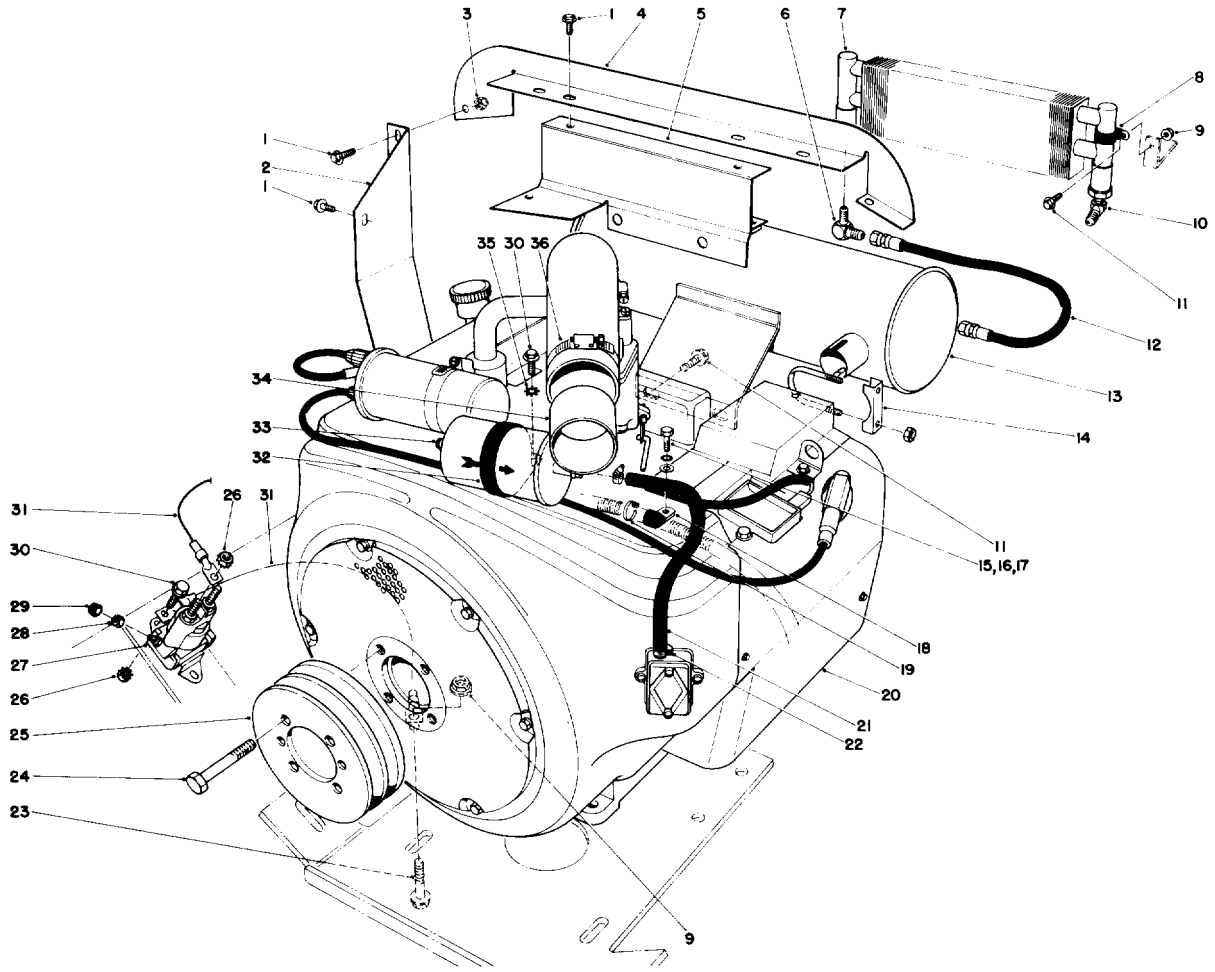

ENGINE ASSEMBLY

Ref. No.	Part No.	Description	No. Used
1	3234-13	Screw – Cap Hex Hd. Flange	10
2	44-8690	Shield – Engine Heat	1
3	3296-16	Nut – Lock, Nylon Insert	1
4	44-8710	Shroud – Engine	1
5	44-9010	Bracket – Shield Support	1
6	353-428	Elbow – Male 90°	1
7	22-7320	Oil Cooler	1
8	2412-39	Clamp – R	2
9	3290-357	Nut – Hex Hd. w/Locking Flange	4
10	353-714	Elbow – Male 45°	1
11	3234-11	Screw – Cap, Hex Hd. w/Locking Flange	4
12	44-9020	Hose Assembly – Oil	1
13	44-8960	Muffler	1
*	46-2390	Muffler – Spark Arrestor (Optional)	1
14	2412-76	Clamp – Muffler	2
15	321-4	Capscrew	1
16	3253-3	Washer – Lock Spring	1
17	3256-22	Washer – Plain, Flat	1
18	2412-81	Clamp – R	1
19	3290-336	Tie Cable	1

*Not Illustrated

Ref. No.	Part No.	Description	No. Used
20	221-711	Engine (Onan Model No. B48G-GA020 Type No. 4051C	1
21	44-9060	Line – Fuel	1
22	2412-36	Hose Clamp	2
23	3234-18	Screw – Cap Hex Hd. w/Locking Flange	2
24	322-40	Screw – Cap, Hex Hd.	4
25	43-5340	Pulley – Engine	1
26	32149-2	Nut – Lock	4
27	44-9380	Solenoid Starter	1
28	3219-14	Nut – Hex	1
29	32149-8	Nut – Lock	1
30	3234-4	Screw – Cap Hex Hd. w/Locking Flange	3
31	10-7160	Wire Assembly	2
32	2412-44	Clamp – Filter	1
33	18-1520	Filter Gas	1
34	44-9450	Adapter – Air Inlet	1
35	3255-8	Washer – Lock, External Tooth	2
36	2412-42	Hose Clamp	1

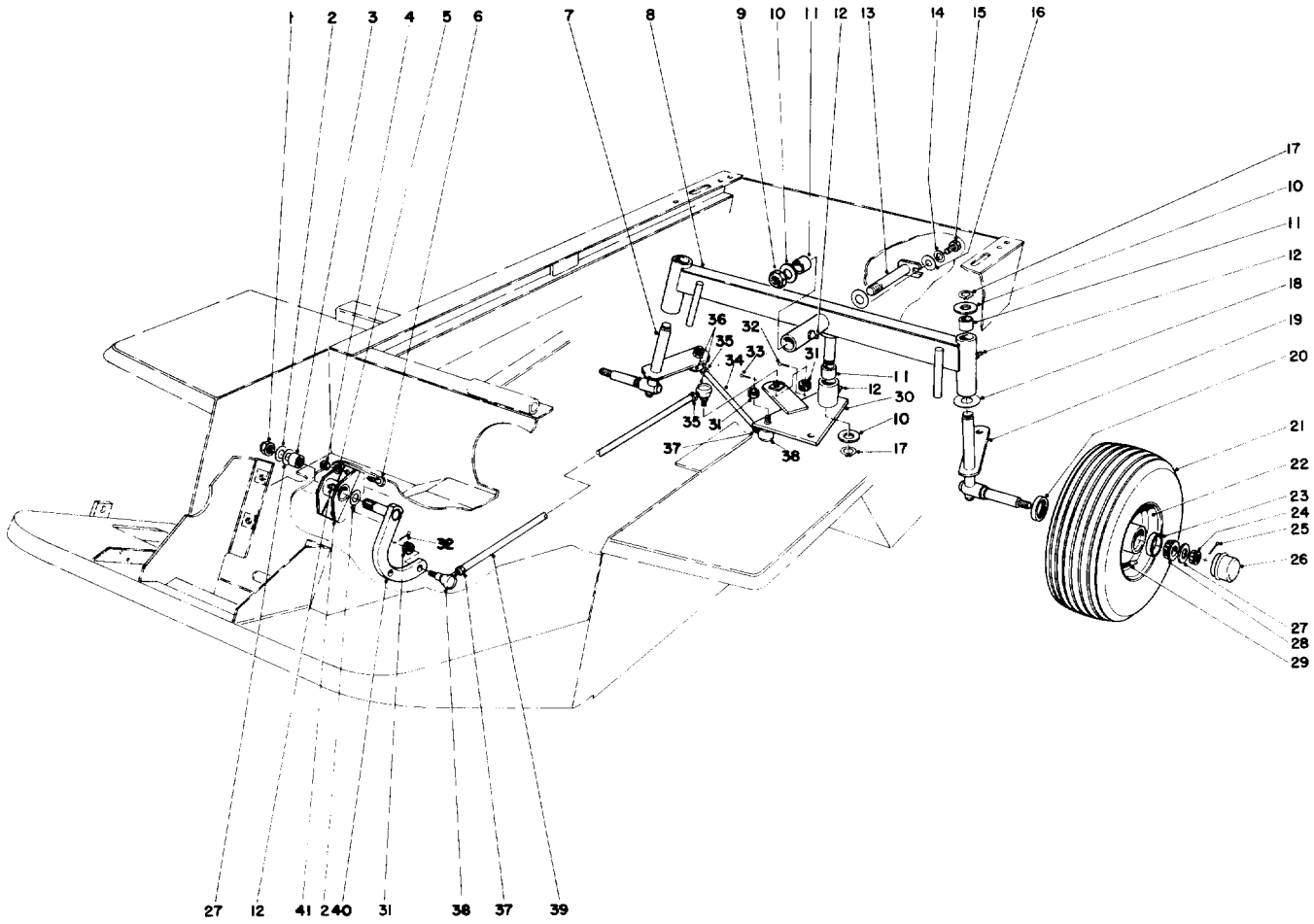

REAR AXLE ASSEMBLY

Ref. No.	Part No.	Description	No. Used
1	3296-15	Nut – Lock	1
2	3-6514	Washer – Thrust	2
3	252-6	Bearing	2
4	3217-7	Nut – Full	2
5	3253-21	Washer – Lock	2
6	323-5	Screw – Cap, Hex. Hd.	2
7	39-8900	Spindle R.H.	1
8	44-9090	Rear Axle (Incl. Ref. #11 & 12)	1
9	3296-49	Nut – Lock, Nylon Insert	1
10	10-8110	Washer	4
11	3-0348	Bushing	8
12	302-5	Grease Fitting	4
13	27-4060	Pin – Rear Axle	1
14	3253-3	Lockwasher	1
15	321-2	Capscrew	1
16	3256-22	Washer – Plain, Flat	1
17	32151-36	Ring – Retaining Ext.	3
18	256-121	Bushing	2
19	39-8850	Spindle L.H.	1
20	253-129	Oil Seal	2
21	231-104	Tire	2
22	217-108	Rim (Incl. Ref. #23)	2
23	254-72	Bearing Cup	4

Ref. No.	Part No.	Description	No. Used
24	32136-5	Nut – Hex, Castle	2
25	3272-13	Cotter Pin	2
26	241-119	Dust Cap	2
27	3256-28	Washer – Plain, Flat	3
28	254-94	Bearing Cone	2
29	232-35	Valve Stem W/Cap	2
30	44-9120	Steering Plate (Incl. Ref. #11 & 12)	1
31	32136-4	Slotted Nut	6
32	3272-7	Cotter Pin	2
33	3272-6	Cotter Pin	4
34	27-4090	Tie Rod – Steering	2
35	3220-12	Nut – Hex Jam	3
36	21-0150	Socket Assembly L.H. (Incl. Ref. #31)	3
37	3220-5	Nut – Hex Jam	3
38	21-0140	Socket Assembly R.H. (Incl. Ref. #31)	3
39	44-9110	Tube – Rear Steering	1
40	27-5230	Pivot Arm	1
41	27-3640	Pivot Mount (Incl. Ref. #3 & 12)	1
*	232-39	Inner Tube (Optional)	2

*Not Illustrated

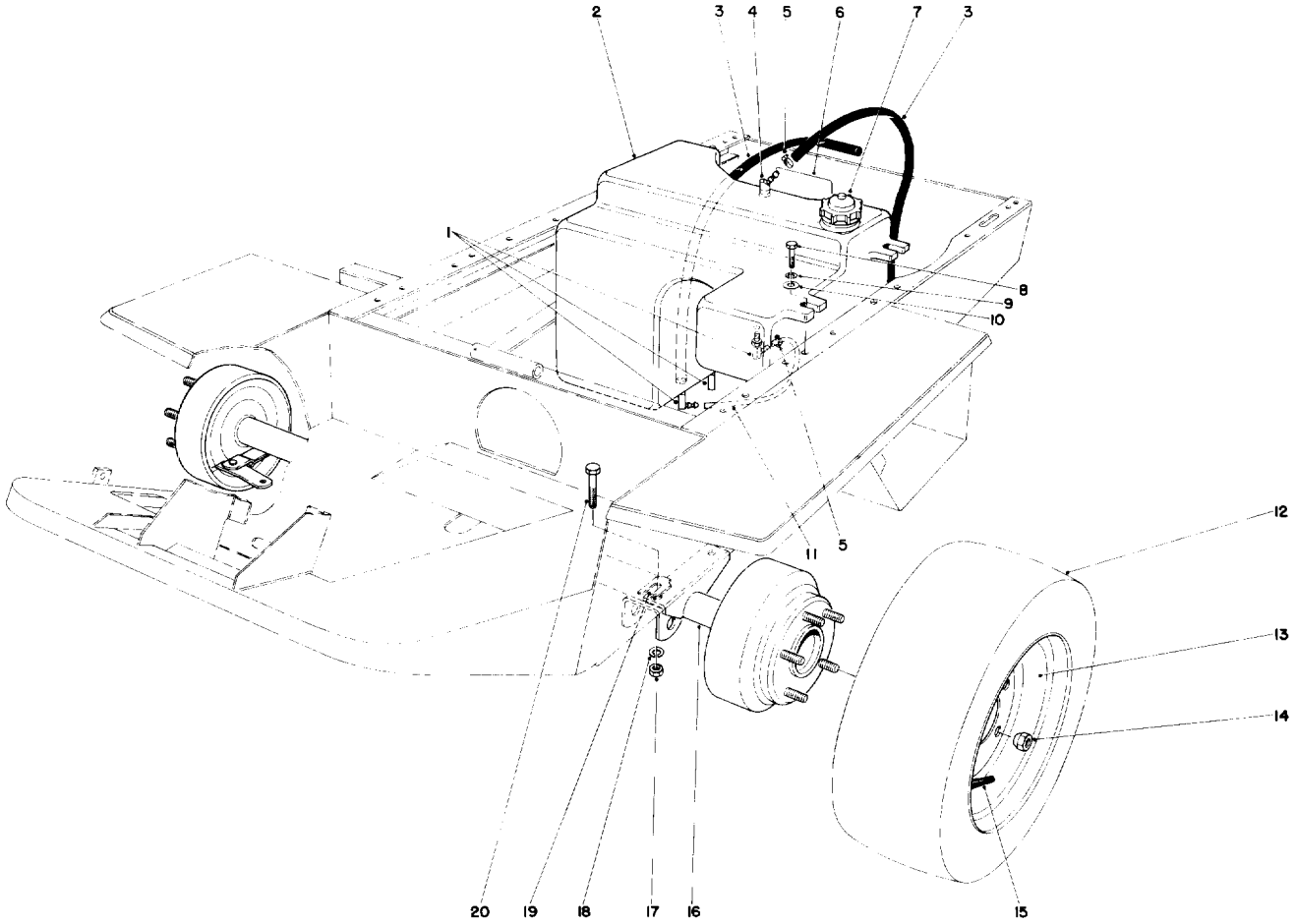

GAS TANK AND AXLE ASSEMBLY

Ref. No.	Part No.	Description	No. Used
1	353-536	90° Elbow	3
2	43-5350	Gas Tank (Incl. Ref. # 1 & 3)	1
3	37-9920	Hose	2
4	353-705	45° Elbow	1
5	2412-36	Clamp – Worm Drive	5
6	43-8480	Decal – Danger	1
7	37-9540	Gas Cap	1
8	323-19	Screw – Cap, Hex Hd.	3
9	3253-21	Lockwasher	3
10	3256-41	Washer – Plain	3
11	27-5370	Gas Line – Tank Connection	1

Ref. No.	Part No.	Description	No. Used
12	231-103	Tire	2
13	217-107	Rim	2
14	242-35	Nut – Hex	10
15	232-35	Valve Stem w/Cap	2
16	43-9040	Axle Assembly	1
17	3217-8	Nut – Hex	4
18	3253-6	Washer – Lock	4
19	42-6080	Shim Axle	A/R
20	324-9	Screw – Cap, Hex Hd.	4
*	232-43	Inner Tube (Optional)	2

* Not Illustrated

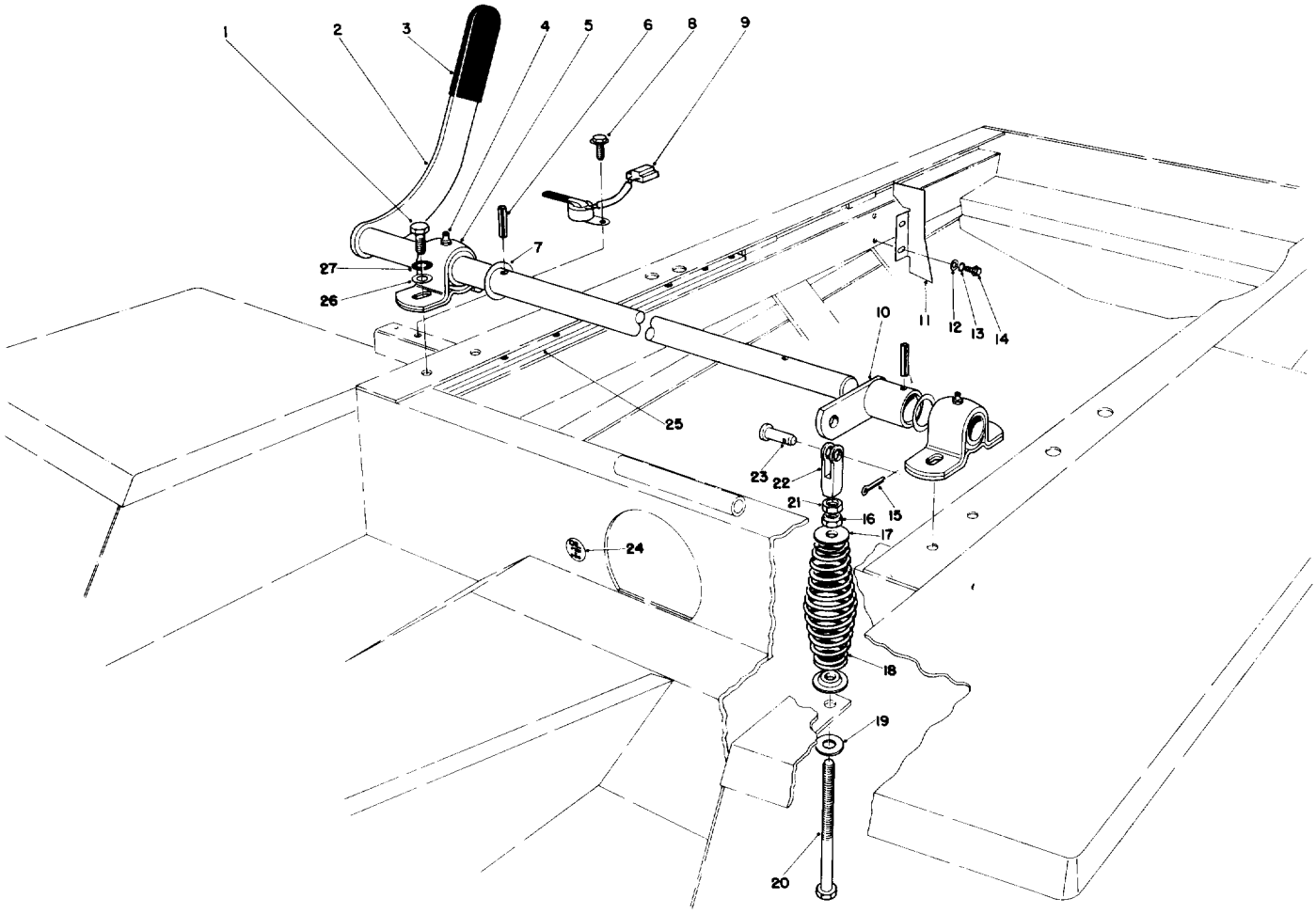

POWER TAKE OFF LEVER ASSEMBLY

Ref. No.	Part No.	Description	No. Used
1	321-4	Capscrew	4
2	27-4910	Power Take Off Lever	1
3	21-1880	Grip Handle	1
4	302-5	Grease Fitting	2
5	251-269	Bearing – Pillow Block	2
6	32121-31	Pin – Roll	2
7	3-6514	Washer	2
8	32104-116	Screw – Self Tapping Hex Washer Hd.	1
9	29-6930	Switch Arm	1
10	46-3360	Engagement Arm	1
11	44-8680	Shield – Heat	1
12	3256-23	Washer – Plain	2
13	3253-4	Washer – Lock Spring	2

Ref. No.	Part No.	Description	No. Used
14	32104-23	Screw – Self Tapping Hex Hd.	2
15	3272-5	Cotter Pin	1
16	3296-5	Nut – Lock	1
17	44-8890	Retainer – Spring	2
18	44-8820	Spring – Compression	1
19	3256-41	Washer – Plain	1
20	27-7900	Screw – Adjusting	1
21	3220-3	Nut – Hex Jam	1
22	282-1	Yoke	1
23	283-42	Pin – Clevis	1
24	11-6350	Decal – Oil	1
25	37-7060	Bar – Frame Rail	2
26	3256-22	Washer – Plain	4
27	3253-3	Washer – Lock Spring	4

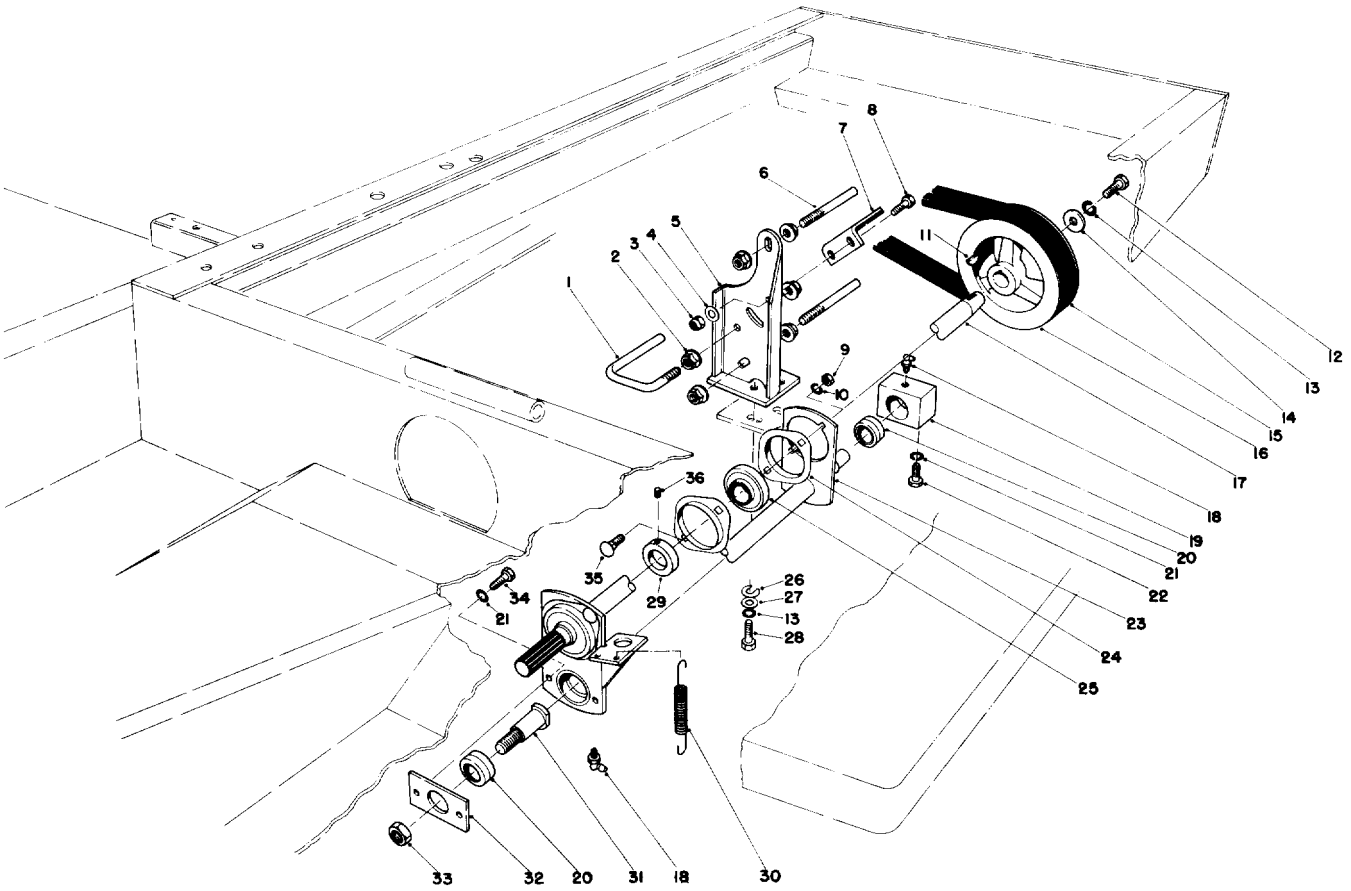

POWER TAKE OFF ASSEMBLY

Ref. No.	Part No.	Description	No. Used
1	44-9220	Guide – Belt, Power Take Off (Lower)	1
2	3290-357	Nut – Hex Hd. w/Locking Flange	6
3	3296-29	Nut – Lock, Nylon Insert	2
4	3256-23	Washer	2
5	44-9310	Bracket – Power Take Off Brake	1
6	44-9230	Guide – Belt Power Take Off	2
7	44-9330	Support Pad Assembly – Power Take Off Brake	1
8	322-4	Screw – Cap Hex Hd.	2
9	3217-6	Nut – Hex	4
10	3253-4	Washer – Lock, Spring	4
11	3257-5	Key – Woodruff	1
12	323-18	Screw – Cap, Hex Hd.	1
13	3253-21	Washer – Lock, Spring	4
14	29-4730	Washer – Power Take Off	1
15	44-8990	V-Belt – Torque Team	1
16	43-5320	Pulley – Power Take Off	1
17	27-4980	Shaft – Power Take Off	1

Ref. No.	Part No.	Description	No. Used
18	302-40	Grease Fitting	2
19	28-9050	Hub – Bearing	1
20	251-268	Bearing	2
21	3253-3	Washer – Lock Spring	4
22	321-6	Screw – Cap, Hex Head	2
23	44-9350	Engagement Arm	1
24	251-255	Flange Bearing	4
25	251-253	Bearing w/Collar (Incl. Ref. # 29 & 36)	2
26	28-5640	Washer – Special	A/R
27	3256-24	Washer – Plain, Flat	3
28	323-7	Screw – Cap, Hex Hd.	3
29	251-77	Locking Collar	2
30	28-8950	Spring – Extrusion	2
31	27-6970	Stud – Bearing	1
32	27-6650	Retainer – Bearing	1
33	3296-33	Nut – Lock Nylon Insert	1
34	321-3	Screw – Cap Hex Hd.	2
35	3230-16	Carriage Bolt	4
36	3245-1	Set Screw	2

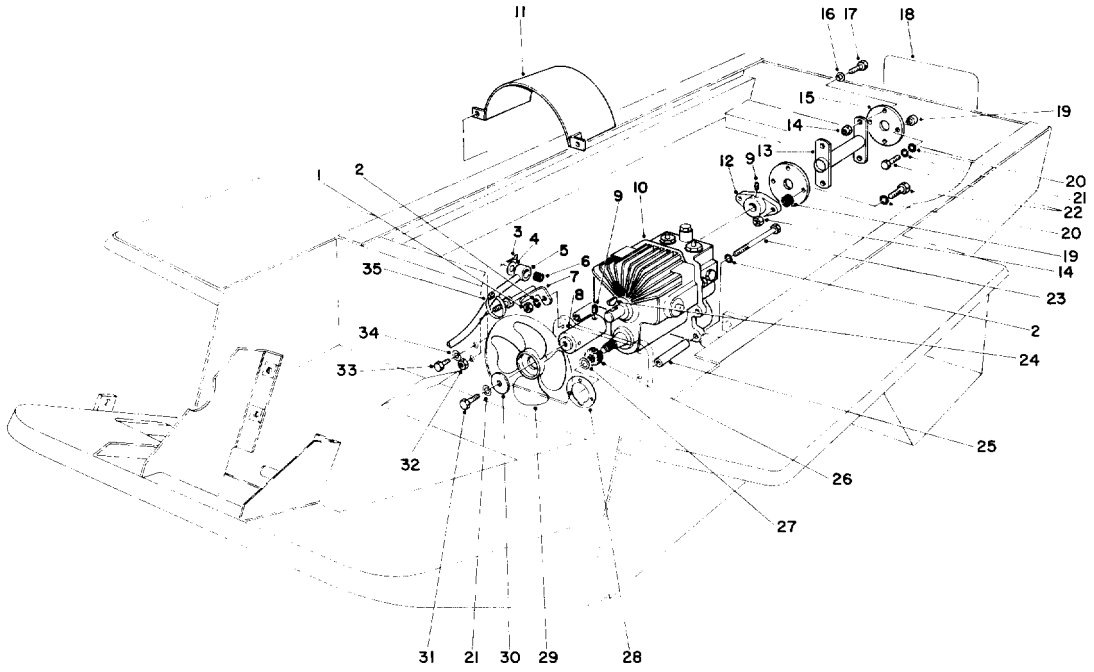

TRANSMISSION AND DRIVE COUPLING ASSEMBLY

Ref. No.	Part No.	Description	No. Used
1	3217-7	Nut Hex	1
2	3253-21	Washer – Lock Spring	3
3	3272-10	Pin Cotter	1
4	3256-26	Washer – Plain, Flat	1
5	27-4160	Pump Control Tube	1
6	23-2270	Bushing – Rubber	1
7	27-5310	Axle Support	1
8	27-4340	Hub & Plug Assembly	1
9	3245-1	Setscrew	4
10	46-7240	Transmission	1
11	27-3270	Fan Shroud	1
12	27-4370	Pump Hub	1
13	44-8720	Drive Shaft	1
14	32152-5	Nut – Lock, Top Deform	6
15	44-2230	Coupling – Rubber	2
16	27-6600	Spacer – Rubber Coupling	4
17	3210-5	Screw – Cap, Hex. Hd.	4
18	43-5120	Decal – Toro	1

Ref. No.	Part No.	Description	No. Used
19	33-2020	Spacer	4
20	3256-3	Washer – Plain, Flat	4
21	3253-4	Washer – Lock, Spring	2
22	3210-8	Screw – Cap, Hex. Hd.	4
23	323-38	Screw – Cap Hex Hd.	2
24	3257-5	Woodruff Key	2
25	27-3680	Mounting Spacer	4
26	23-4810	Spur Gear	1
27	32120-72	Snap Ring	1
28	27-3690	Gasket – Transmission	1
29	27-3740	Fan	1
30	27-4360	Washer	1
31	322-5	Capscrew	1
32	3218-5	Nut – Hex Jam	2
33	321-2	Screw – Cap Hex Hd.	2
34	3253-3	Washer – Lock Spring	2
35	3290-378	Plastic Ty-On	1

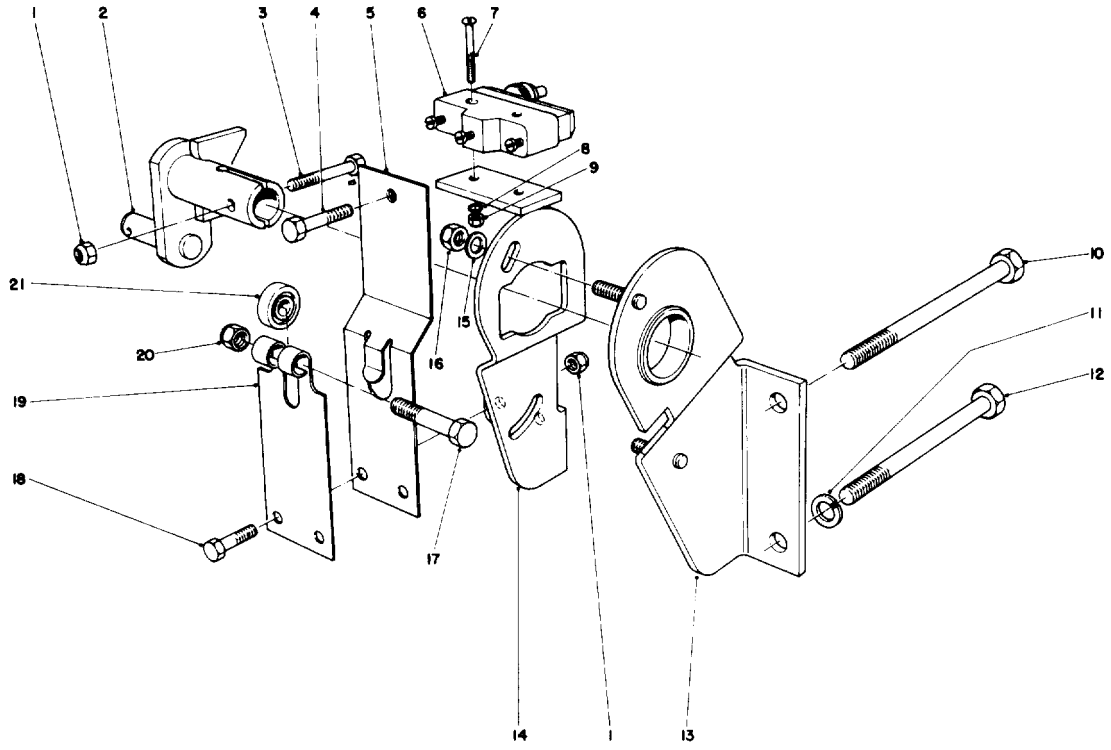

TRANSMISSION INTERLOCK ASSEMBLY

Ref. No.	Part No.	Description	No. Used
1	3296-42	Locknut	4
2	29-9790	Pump Lever	1
3	321-9	Capscrew	2
4	3210-7	Capscrew	1
5	29-6170	Extended Leaf Spring	1
6	29-6160	Micro Switch	1
7	3249-11	Round Head Machine Screw	2
8	3254-9	Internal Tooth Lockwasher	2
9	3217-16	Brass Full Nut	2
10	27-9620	Capscrew	1
11	3253-21	Lockwasher	1

Ref. No.	Part No.	Description	No. Used
12	323-39	Capscrew	1
13	29-9800	Mounting Bracket	1
14	29-9760	Pump Plate	1
15	29-9840	Washer – Thrust	2
16	3296-3	Locknut	2
17	322-17	Capscrew	1
18	321-4	Capscrew	2
19	29-6150	Leaf Spring	1
20	3296-29	Locknut	1
21	251-259	Ball Bearing	1

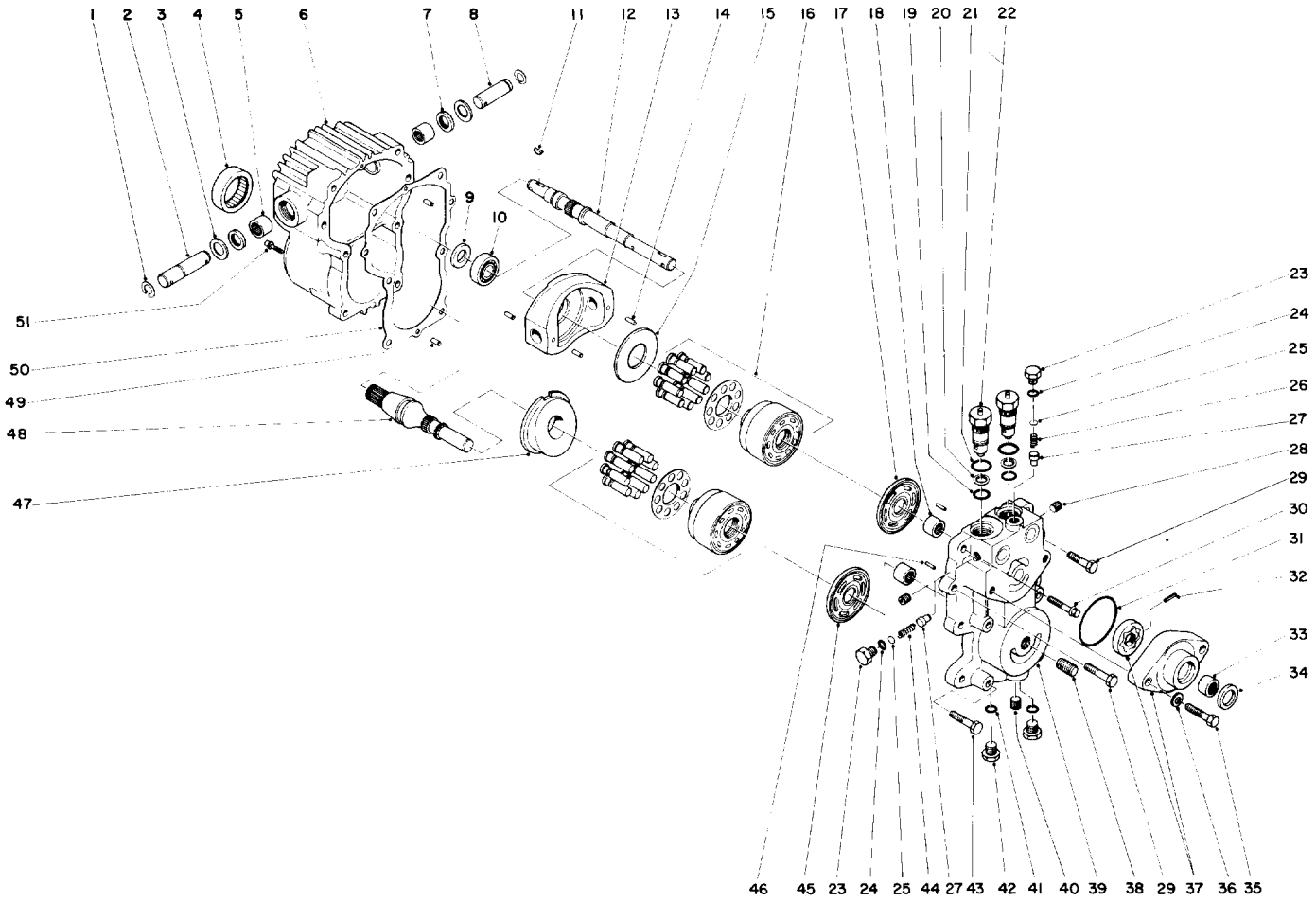

TRANSMISSION ASSEMBLY 46-7240

Ref. No.	Part No.	Description	No. Used
1	32151-46	Retaining Ring	2
2	25-2500	Trunnion Shaft	1
3	25-2510	Washer	2
4	28-3300	Roller Bearing	1
5	28-3310	Needle Bearing	2
6	46-7270	Housing	1
7	25-3210	Lip Seal	2
8	28-3670	Trunnion Shaft	1
9	28-3660	Lip Seal	1
10	251-8	Ball Bearing	1
11	3257-5	Woodruff Key	2
12	28-3640	Pump Shaft	1
13	28-3630	Variable Swashplate	1
14	32121-91	Pin	3
15	28-3610	Thrust Plate	1
16	25-2600	Cylinder Block Kit	2
17	46-7320	Pump Valve Plate	1
18	25-3300	Needle Bearing	2
19	28-3590	"O" Ring	2
20	28-3580	Back Up Ring	2
21	28-3570	"O" Ring	2
22	40-6700	Check Valve Assembly (Incl. Ref. # 19 - 21)	2
23	25-2460	Hex Hd. Plug	2
24	28-3400	"O" Ring	2
25	25-2470	Shim Pack	A/R
26	46-7310	Relief Valve Spring Imp.	1

Ref. No.	Part No.	Description	No. Used
27	28-3420	Relief Valve Cone Chg.	2
28	285-17	Pipe Plug	4
29	323-8	Capscrew	2
30	28-3530	Capscrew	2
31	28-3520	"O" Ring	1
32	38-2680	Pin	1
33	252-63	Needle Bearing	1
34	28-3470	Lip Seal	1
35	324-23	Hex Hd. Capscrew	2
36	28-3450	Flat Washer	2
37	38-2670	Charge Pump Kit (Incl. Ref. # 31 - 34)	1
38	25-2660	Filter Union	1
39	46-7300	Center Section	1
40	46-7280	Plug – Pipe	1
41		"O" Ring	2
42	28-3440	Threaded Plug (Incl. Ref. # 41)	2
43	323-10	Capscrew	4
44	25-2480	Relief Valve Spring Chg.	1
45	28-3380	Motor Valve Plate	1
46	25-2430	Pin	2
47	28-3370	Swashplate	1
48	28-3360	Motor Shaft	1
49	28-3350	Pin	2
50	28-3340	Gasket	1
51	28-3320	12 Point Capscrew	2

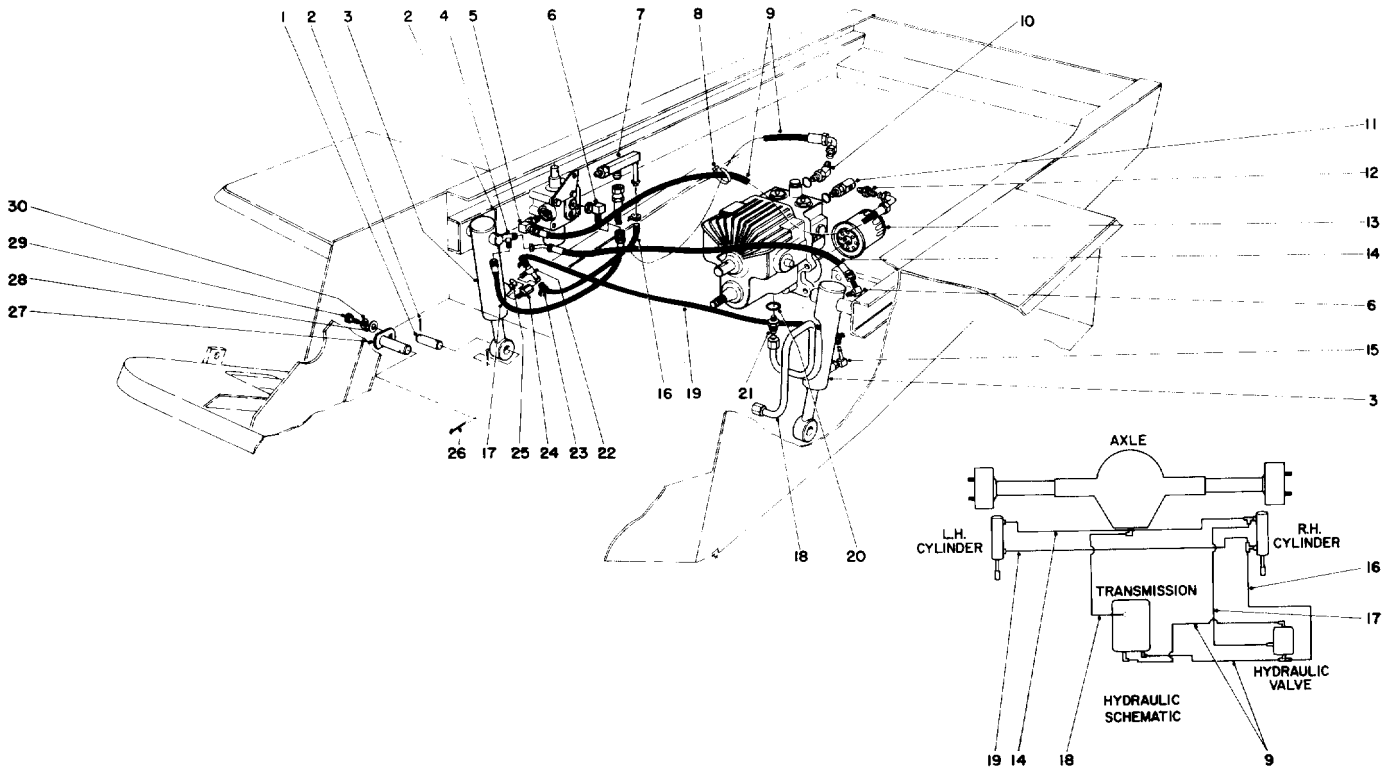

HYDRAULIC VALVE AND LIFT ARM AND CYLINDERS

Ref. No.	Part No.	Description	No. Used
1	27-4240	Pin – Cylinder	2
2	3272-23	Pin – Cotter	6
3	43-5260	Hydraulic Cylinder	2
4	353-566	Fitting – Adjustment Tee	1
5	353-374	90° Elbow	1
6	353-375	90° Elbow	2
7	38-2550	Fitting Assembly	1
8	3290-378	Plastic Ty – On	2
9	38-2560	Hose – Transmission To Valve	2
10	353-212	Fitting	1
11	36-7960	Fitting Special	1
12	353-678	Adapter	1
13	23-2300	Oil Filter	1
14	27-5010	Hose – Cylinder Connector	1
15	304-99	90° Barb Hose Stem	1

Ref. No.	Part No.	Description	No. Used
16	27-4490	Hose – Low Pressure	1
17	27-5020	Hose – Cylinder Tee To Valve	1
18	27-3760	Hydraulic Tube	1
19	27-4480	Hose – Low Pressure	1
20	237-80	"O" – Ring	1
21	353-385	Fitting	1
22	353-567	Fitting – Male Tee	1
23	2412-36	Clamp – Worm Drive	4
24	353-565	Fitting – Connector	1
25	237-78	"O" Ring	1
26	3272-17	Pin Cotter	2
27	27-4310	Pivot Pin	2
28	3256-22	Washer – Plain Flat	2
29	321-2	Screw – Cap Hex. Hd.	2
30	3253-3	Washer – Lock Spring	2

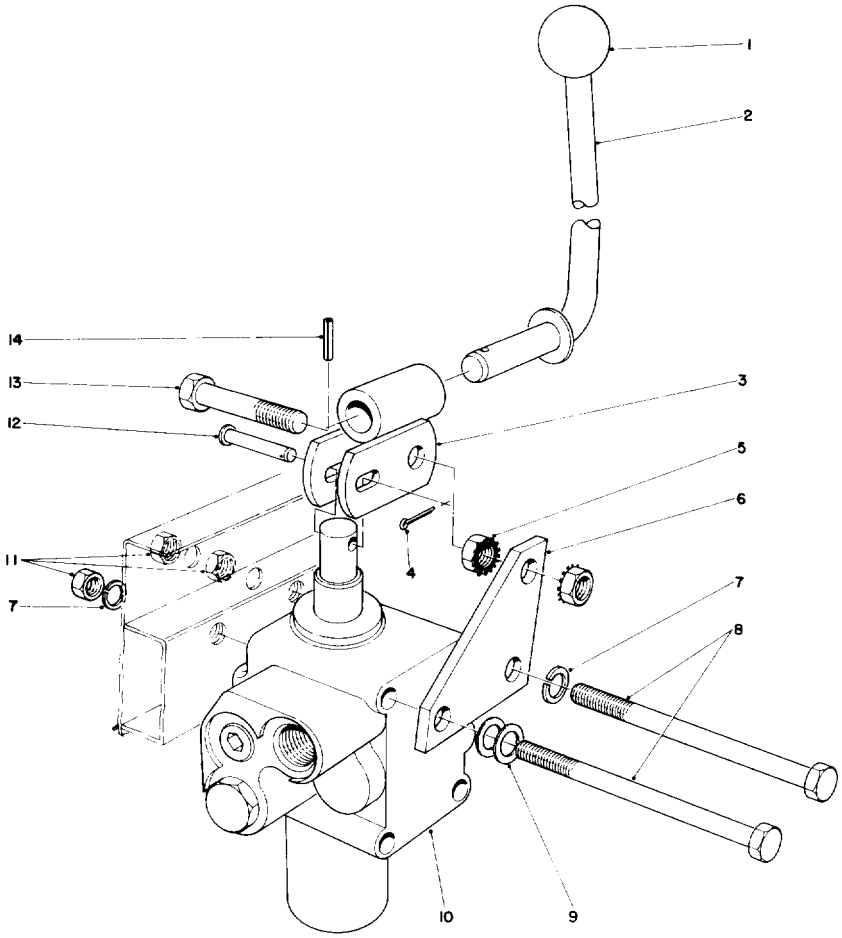

VALVE AND LEVER ASSEMBLY

Ref. No.	Part No.	Description	No. Used
1	233-39	Knob	1
2	27-4200	Valve Lever	1
3	27-4220	Valve Lever Link	1
4	3272-6	Cotter Pin	1
5	32149-2	Nut – Lock	2
6	27-4230	Bracket – Valve	1
7	3253-3	Lockwasher	3

Ref. No.	Part No.	Description	No. Used
8	321-24	Screw – Cap, Hex Hd.	3
9	3256-22	Washer – Plain	2
10	43-1700	Valve Hydraulic	1
11	3217-5	Nut – Hex	4
12	283-17	Clevis Pin	1
13	321-10	Screw – Cap, Hex Hd.	1
14	32121-73	Roll Pin	1

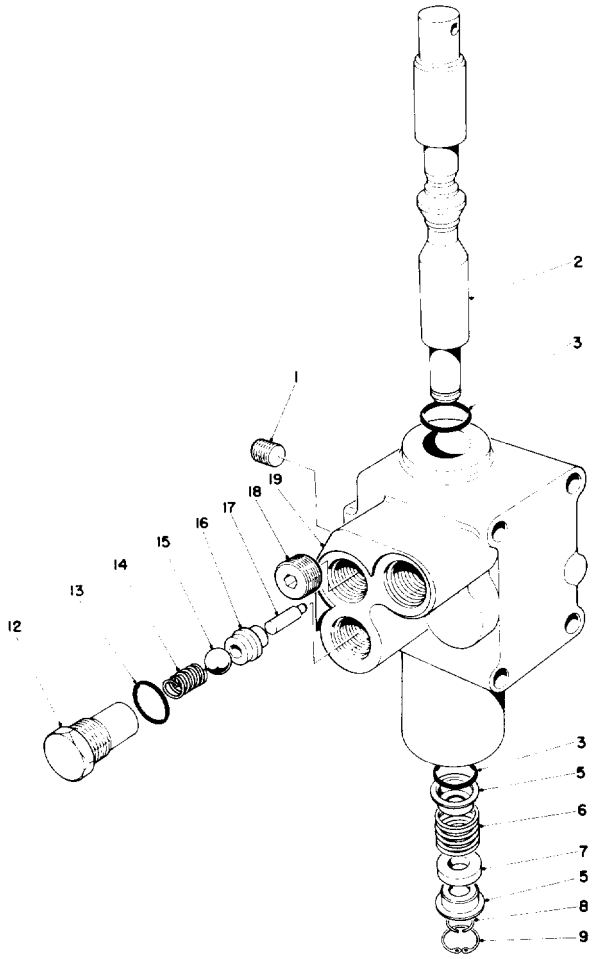

VALVE ASSEMBLY NO. 43-1700

Ref. No.	Part No.	Description	No. Used
1	28-1120	Plug	1
2	27-5210	Spool	1
3	22-8500	O-Ring	2
5	22-8380	Retainer – Spring	2
6	22-8410	Spring	1
7	27-5200	Float Spacer	1
8	22-8480	Snap Ring – Spool	1
9	22-8490	Snap Ring	1

Ref. No.	Part No.	Description	No. Used
12	22-8330	Plug	1
13	237-42	O-Ring	1
14	22-8340	Spring	1
15	22-8350	Ball	1
16	22-8370	Seat – Check Valve	1
17	22-8360	Pin Cam	1
18	28-1130	Plug	1
19		Body	1

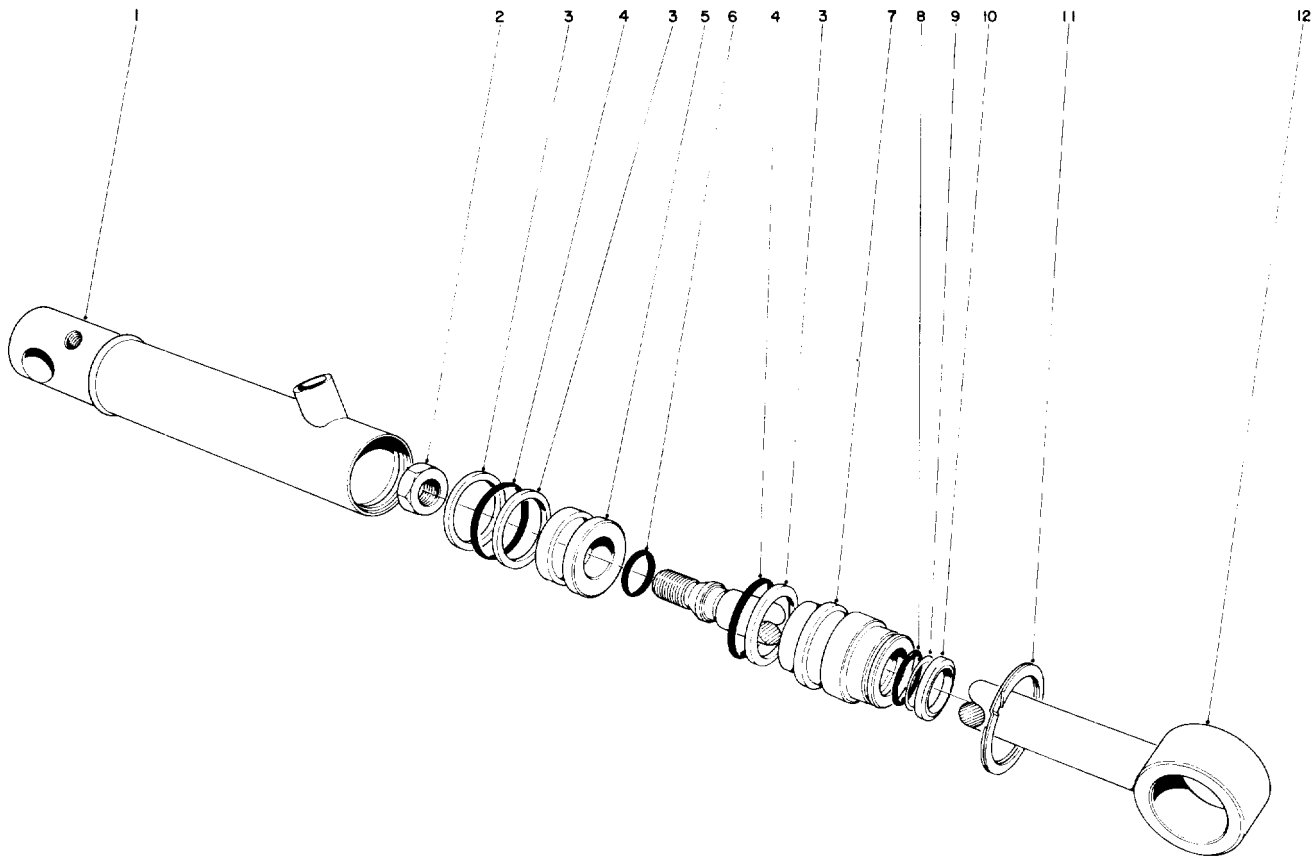

HYDRAULIC CYLINDER NO. 43-5260

Ref. No.	Part No.	Description	No. Used
1		Tube Assembly	1
2	43-5130	Jam Nut	1
3		Back Up Washer	3
4		O-Ring Piston	2
5	43-5150	Piston	1
6		O-Ring	1
7	43-5140	Head	1
8		O-Ring	1
9		Leather	1
10		Dust Seal	1
11	43-5220	Ring Retaining	1
12	43-5230	Shaft w/Clevis	1
*	43-5250	Seal Repair Kit (Incl. Ref.. # 3, 4, 6, 8, 9 & 10)	1

*Not Illustrated

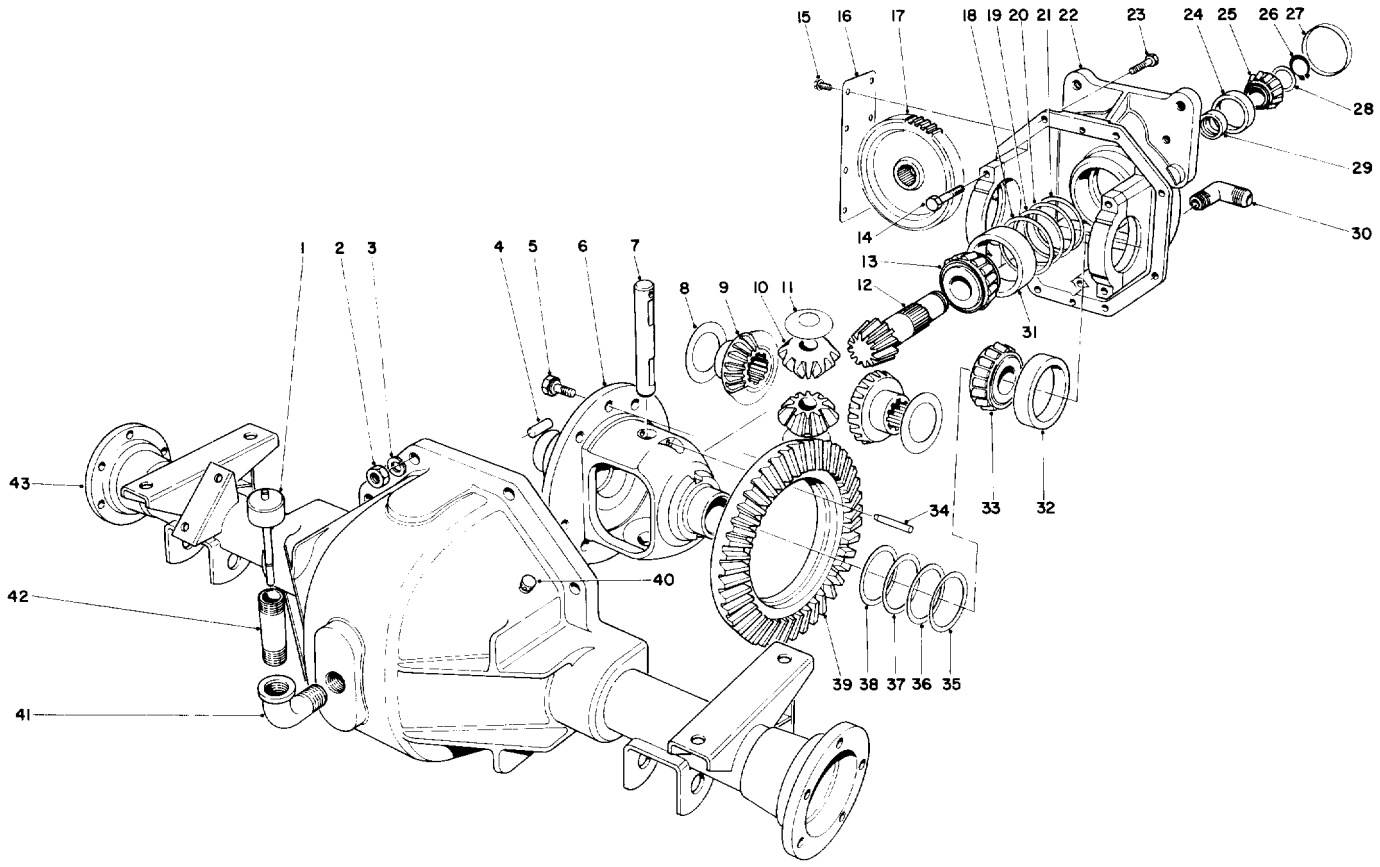

DIFFERENTIAL ASSEMBLY

Ref. No.	Part No.	Description	No. Used
1	27-3710	Dipstick	1
2	3219-2	Nut	8
3	3255-8	Lockwasher	8
4	21-8270	Dowel Pin	2
5	21-7770	Drive Gear Screw	5
6	21-7670	Differential Case	1
7	21-7700	Pinion Mate Shaft	1
8	21-7720	Thrust Washer	2
9	24-8790	Differential Bevel Side Gear	2
10	21-7690	Pinion Gear	2
11	21-7730	Thrust Washer	2
12		Drive Pinion (Incl. Ref. #39)	1
13	43-6760	Tapered Roller Bearing Cone	1
14	324-23	Capscrew	4
15	12-5450	Thread Forming Screw	8
16	21-7830	Gear Cover	1
17	21-8150	Spur Gear	1
18	43-6710	Shim Adjusting Differential Bearing .003	A/R
19	43-6711	Shim Adjusting Differential Bearing .005	A/R
20	43-6712	Shim Adjusting Differential Bearing .010	A/R
21	43-6713	Shim Adjusting Differential Bearing .030	A/R
22	43-6860	Upper Housing Assembly (Incl. Ref. #14)	1
23	3210-7	Capscrew	8

*Not Illustrated

Ref. No.	Part No.	Description	No. Used
24	254-90	Bearing Cup	1
25	254-91	Bearing Cone	1
26	43-6550	Retaining Ring	1
27	21-7850	Cap Plug	1
28	46-2210	Shim Front Pinion Bearing (.031)	A/R
*	46-2211	Shim Front Pinion Bearing (.033)	A/R
*	46-2212	Shim Front Pinion Bearing (.035)	A/R
*	46-2213	Shim Front Pinion Bearing (.037)	A/R
*	46-2214	Shim Front Pinion Bearing (.039)	A/R
*	46-2215	Shim Front Pinion Bearing (.041)	A/R
*	46-2216	Shim Front Pinion Bearing (.043)	A/R
*	46-2220	Shim Front Pinion Bearing (.045)	A/R
*	46-2221	Shim Front Pinion Bearing (.047)	A/R
*	46-2222	Shim Front Pinion Bearing (.049)	A/R
*	46-2223	Shim Front Pinion Bearing (.051)	A/R
*	46-2224	Shim Front Pinion Bearing (.053)	A/R

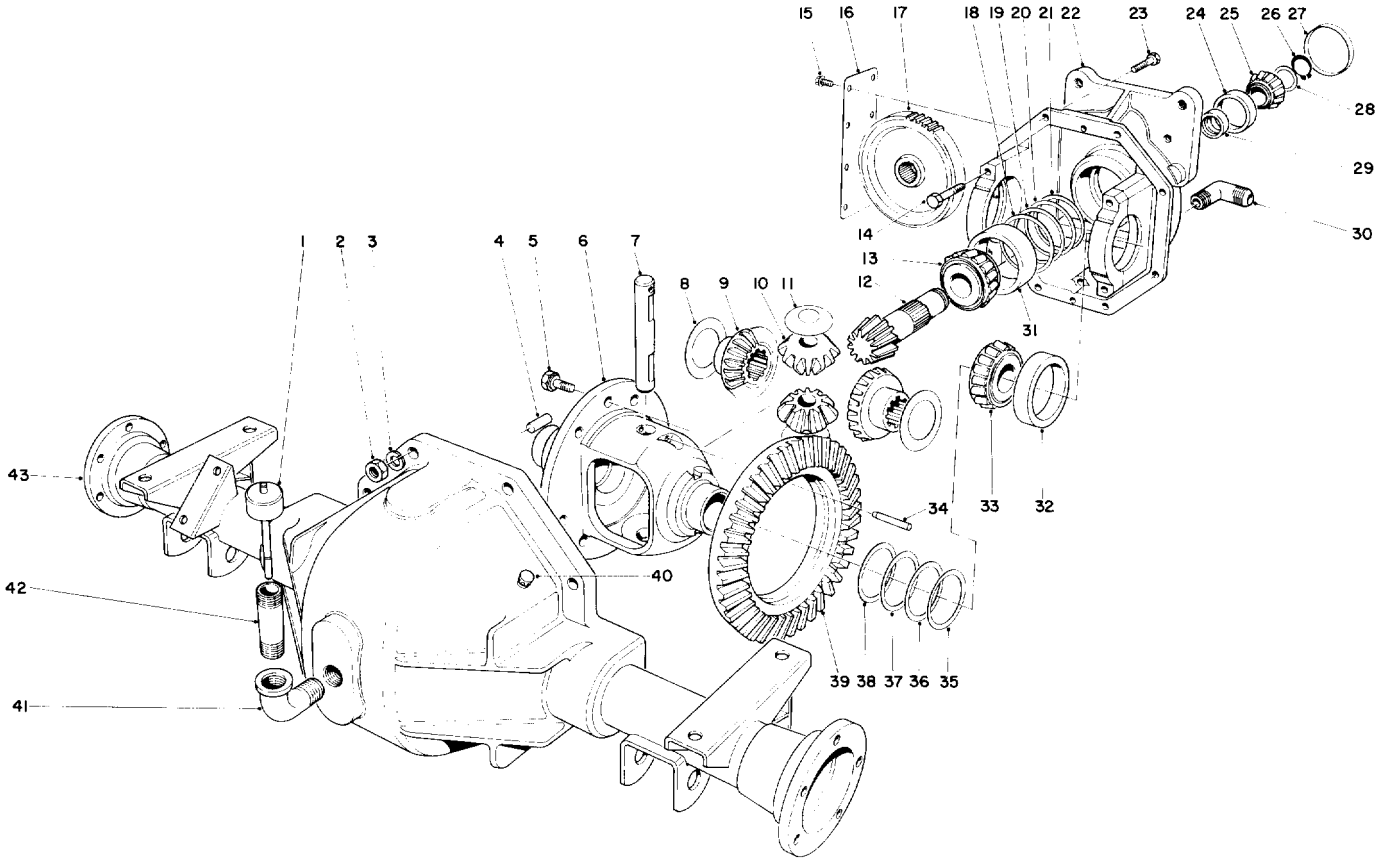

DIFFERENTIAL ASSEMBLY (Continued)

Ref. No.	Part No.	Description	No. Used
*	46-2225	Shim Front Pinion Bearing (.055)	A/R
*	46-2226	Shim Front Pinion Bearing (.057)	A/R
29	21-8020	Front Pinion Bearing Spacer	1
30	353-533	Fitting 90° Elbow	1
31	43-6750	Tapered Roller Bearing Cup	1
32	254-66	Cup – Tapered Bearing	2
33	254-65	Cone – Tapered Bearing	2
34	32121-15	Roll Pin	1
35	21-8090	Differential Adjust. Shim. .003	A/R

Ref. No.	Part No.	Description	No. Used
36	21-8100	Differential Adjust. Shim. .005	A/R
37	21-8110	Differential Adjust. Shim. .010	A/R
38	21-8120	Differential Adjust. Shim. .030	A/R
39		Ring Gear	1
40	46-3330	Vent Tube Assembly	1
41	2811-9	Street Elbow 90°	1
42	289-38	Pipe Nipple	1
43	43-6850	Lower Housing Assembly	1
*	43-6510	Gear & Pinion Assembly (Incl. Ref. # 12 & 39)	1

*Not Illustrated

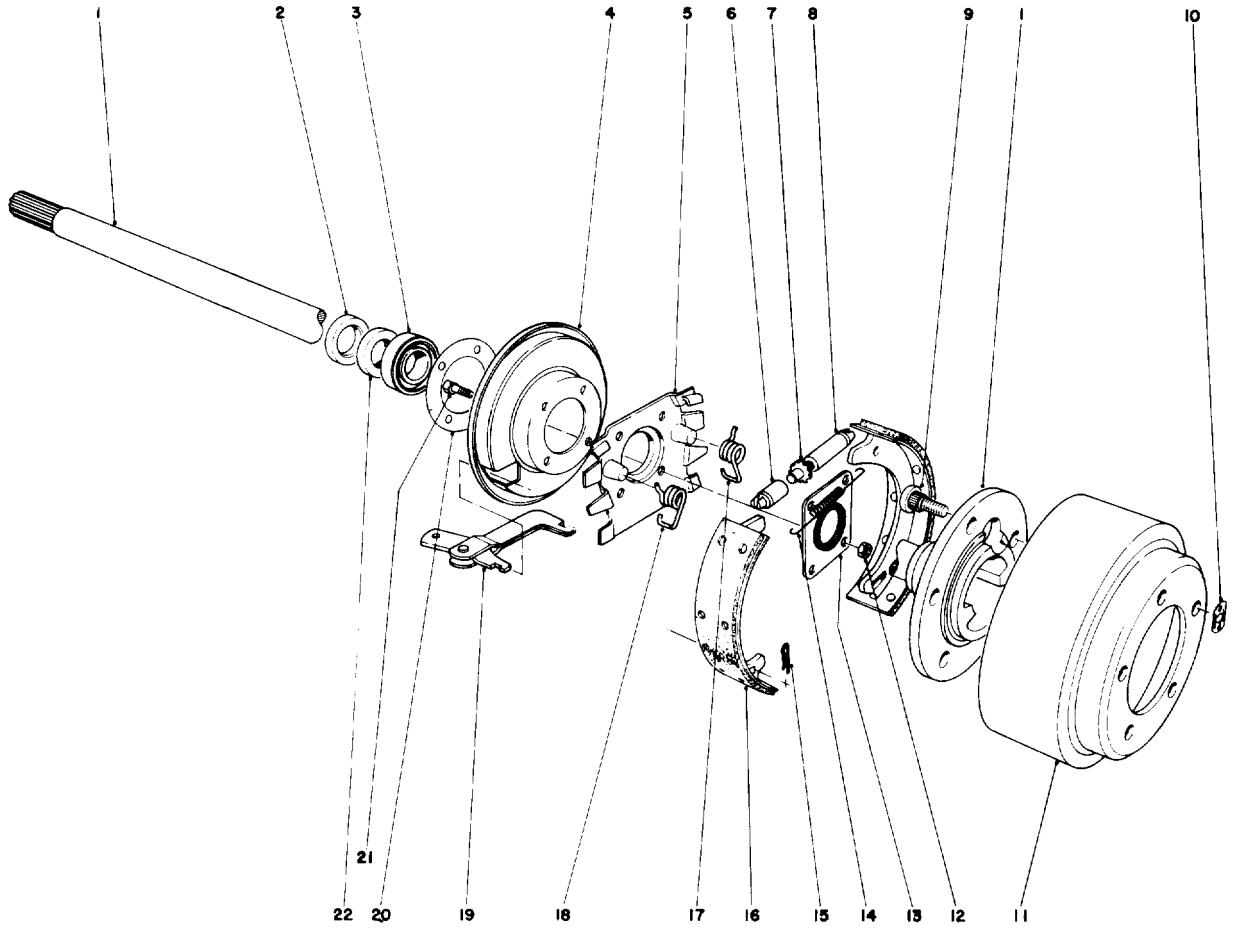

BRAKE ASSEMBLY

Ref. No.	Part No.	Description	No. Used
1	27-6860	Axle Shaft Flanged L.H.	1
*	27-6850	Axle Shaft Flanged R.H.	1
2	21-8330	Oil Seal	2
3	21-8180	Bearing – Tapered Roller	2
4	21-9450	Dust Shield	2
5	40-2190	Torque Spider	2
6	21-9390	Socket – Adjusting Screw	2
7	21-9370	Adjusting Screw	2
8	21-9380	Pivot Nut	2
9	242-34	Axle Flange Stud	10
10	21-8360	Clip Retaining	2
11	28-0680	Brake Drum	2

Ref. No.	Part No.	Description	No. Used
12	43-6800	Locknut – Flange Hd.	8
13	28-0670	Oil Seal	2
14	21-9440	Spring – Adjusting Screw	2
15	21-9460	Retainer – Parking Brake Lever	4
16	43-2690	Shoe & Lining Ass'y.	4
17	21-9420	Spring – Shoe Return L.H.	2
18	21-9430	Spring – Shoe Return R.H.	2
19	27-6880	Strut & Lever Parking Brake	2
20	21-8320	Gasket Wheel Bearing	2
21	28-0660	Capscrew	8
22	24-8840	Ring Wheel Bearing	2

*Not Illustrated

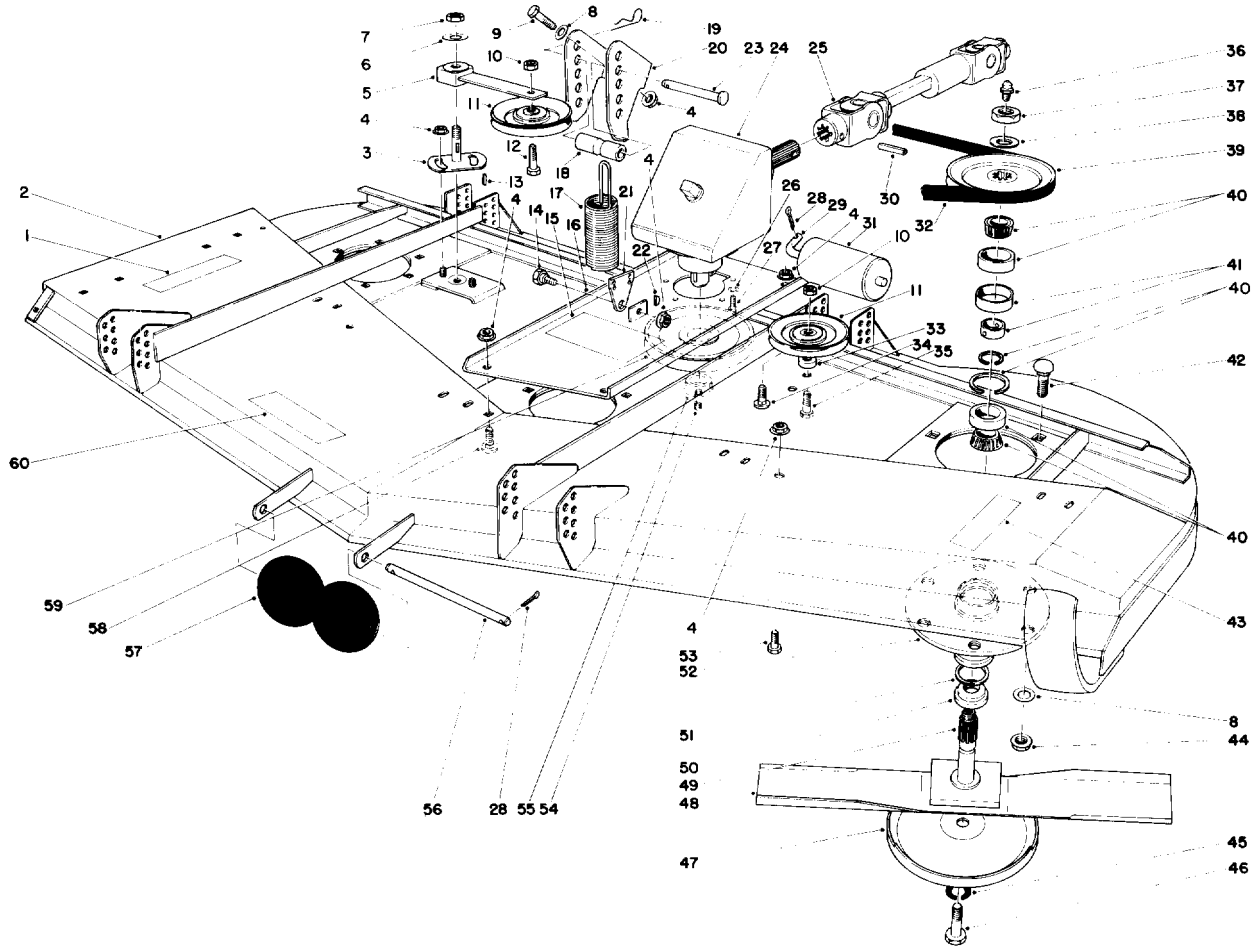

CUTTING UNIT MODEL NO. 30562

Ref. No.	Part No.	Description	No. Used
1	26-7980	Decal – Caution	1
2	44-5960	Cutting Deck	1
3	44-6300	Plate – Idler	1
4	3290-357	Nut – Lock	11
5	27-8580	Idler Socket & Bushing Assy.	1
6	3256-27	Washer	1
7	3296-33	Nut – Lock	1
8	3256-24	Washer	A/R
9	323-10	Screw – Cap, Hex Hd.	2
10	3296-5	Nut – Lock	2
11	27-1080	Pulley – Idler	2
12	3211-6	Screw – Cap, Hex Hd.	1
13	5-1077	Key Square	1
14	46-3380	Bolt – Shoulder	1
15	44-6470	Decal – Caution	1
16	44-6380	Base – Gear Box	1
17	46-3200	Spring – Extension	1
18	40-0300	Spacer	1
19	3290-355	Pin – Hair	1
20	46-2620	Bracket Spring	1
21	46-3190	End Spring	1
22	3257-5	Key – Woodruff	1
23	283-55	Pin Clevis	1

Ref. No.	Part No.	Description	No. Used
24	8-0909	Gear Box	1
25	27-4520	Universal Drive Shaft	1
26	3253-21	Washer – Lock	5
27	3274-1	Screw – Cap, Socket Hd.	5
28	3272-11	Cotter Pin	4
29	40-0340	Shaft – Rear Roller	2
30	32121-34	Pin – Roll	2
31	36-1740	Roller – Deck	2
32	44-6260	V-Belt	1
33	44-6390	Spacer	1
34	3231-27	Bolt – Carriage	2
35	3211-8	Screw – Cap, Hex. Hd.	1
36	302-2	Grease Fitting	3
37	32146-20	Nut – Lock, Hex Jam	3
38	7-4150	Washer	3
39	44-6340	Pulley – Hub Spindle	3
40	27-0960	Bearing Assembly	3
41	27-5970	Spacer – Matched Set	3
42	3231-22	Bolt – Carriage Short Neck	18
43	26-7970	Decal – Caution (Rotating Blades)	1
44	32128-21	Nut – Lock, Flange	18
45	3253-27	Washer – Lock, Spring	3

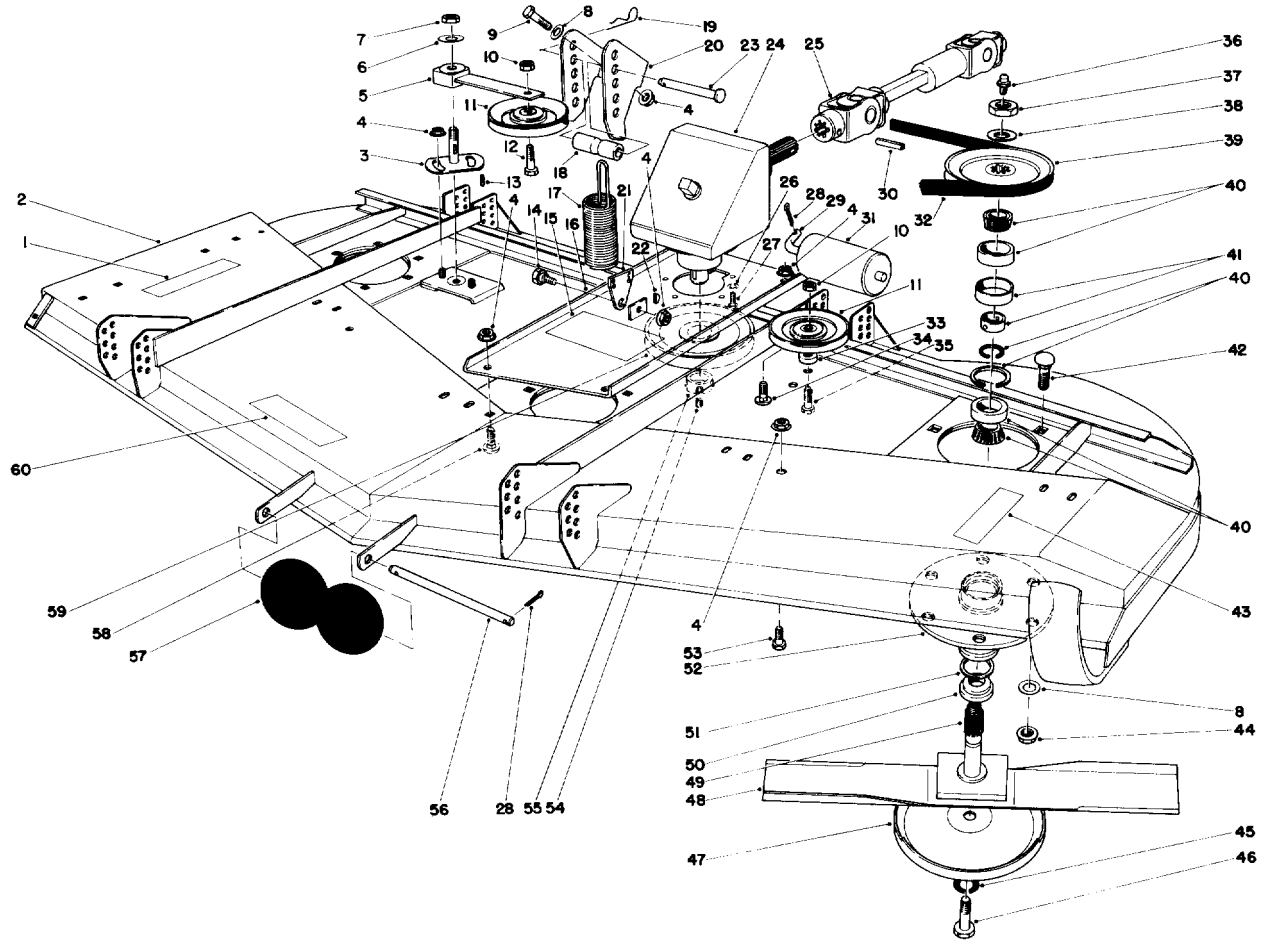

CUTTING UNIT MODEL NO. 30562 (Continued)

Ref. No.	Part No.	Description	No. Used
46	44-2200	Capscrew – Blade	3
47	27-1000	Anti-Scalp Cup	3
48	44-6250	Blade	3
49	27-0920	Spindle Shaft	3
50	27-0950	Spacer – Spindle Bearing	3
51	253-139	Seal – Wave	6
52	27-0880	Spindle Housing	3
53	323-4	Screw – Cap Hex. Hd.	2

Ref. No.	Part No.	Description	No. Used
54	3245-9	Screw – Set, Socket Hd.	2
55	27-6140	Bushing – Taper Lock	1
56	40-6400	Shaft – Roller	1
57	29-4820	Roller – Front	2
58	3231-21	Bolt – Carriage, Short Neck	2
59	27-6110	Pulley – Gear Box	1
60	26-7960	Decal – Caution	1

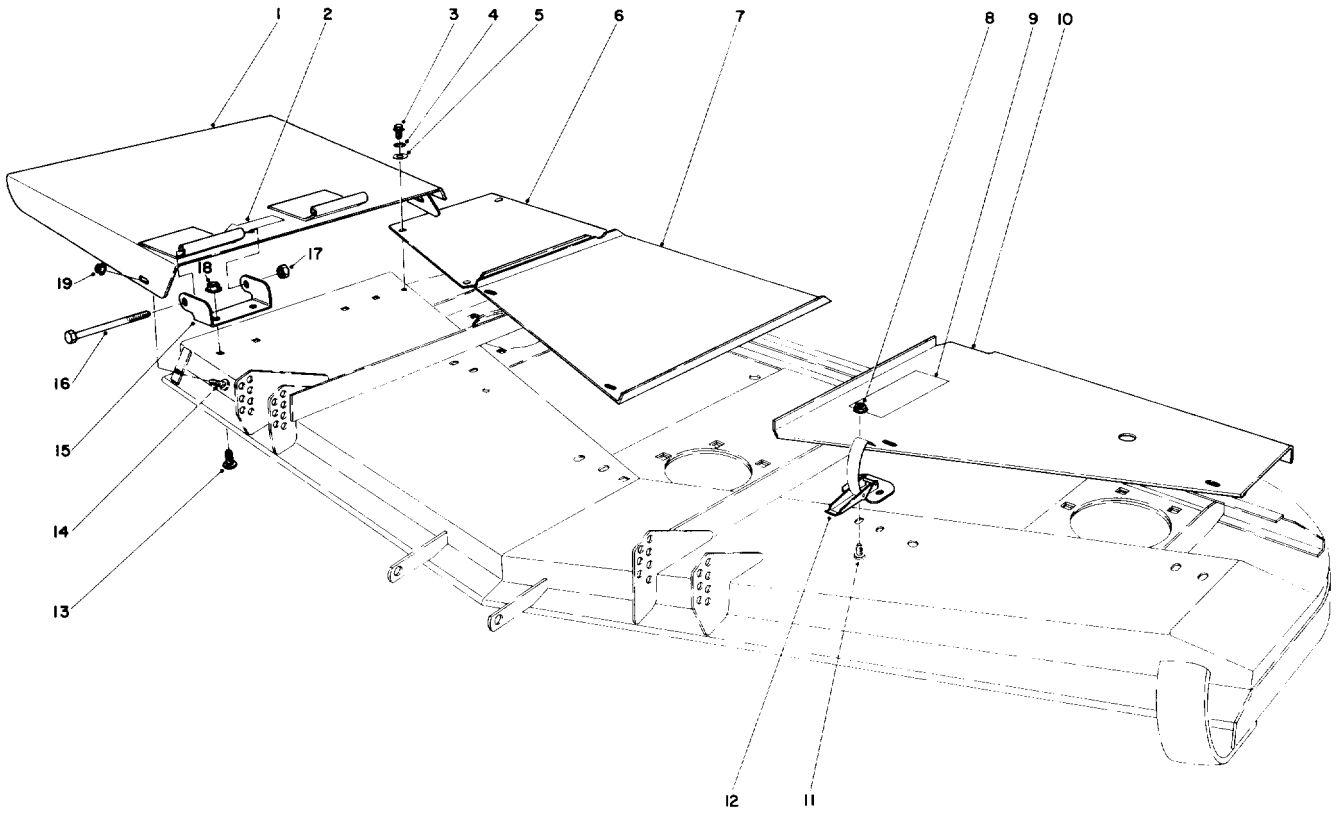

CUTTING UNIT MODEL NO. 30562 (Continued)

Ref. No.	Part No.	Description	No. Used
1	44-6320	Deflector	1
2	26-7120	Decal – Blade Line	1
3	32104-114	Screw Self Tapping Hex. Hd.	4
4	3253-3	Washer – Lock	4
5	3256-22	Washer	4
6	44-6280	Cover – Deck R.H.	1
7	44-6270	Cover – Deck, Center	1
8	32128-17	Nut – Lock, Flange	8
9	42-6860	Decal Height of Cut	1
10	44-6290	Cover – Deck L.H.	1

Ref. No.	Part No.	Description	No. Used
11	3290-144	Screw – Machine Hex Slotted	8
12	249-21	Latch Draw	4
13	3231-27	Bolt – Carriage	4
14	3230-20	Bolt Carriage	2
15	26-1950	Hinge Bracket	2
16	325-17	Screw – Cap, Hex Hd.	2
17	32146-13	Nut – Lock	2
18	3290-357	Nut – Lock	4
19	32128-20	Nut – Lock Hex Flange	2

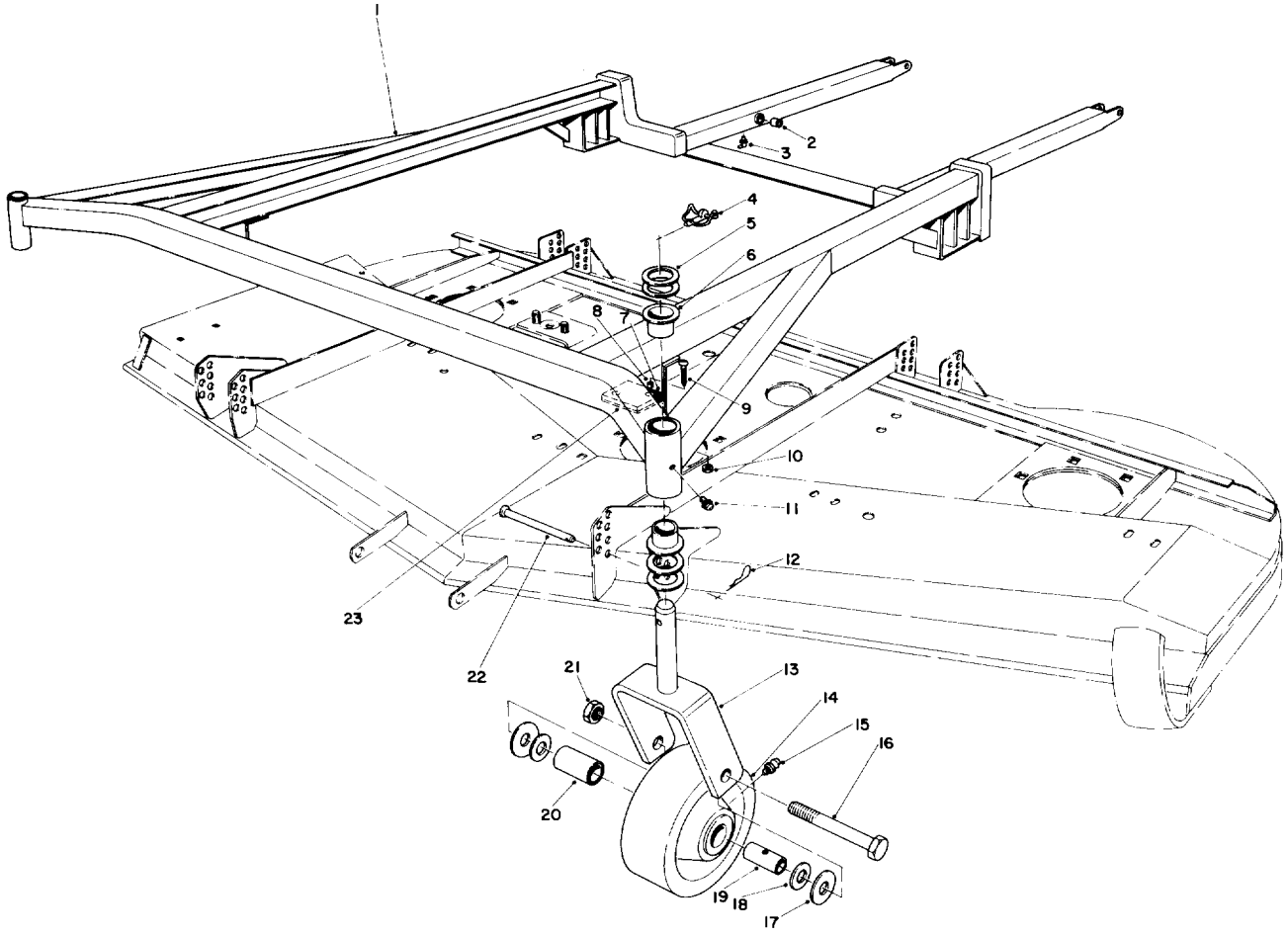

CUTTING UNIT MODEL NO. 30562 (Continued)

Ref. No.	Part No.	Description	No. Used
1	44-6410	Frame	1
2	256-101	Bushing	4
3	302-40	Grease Fitting	2
4	3290-384	Lynch Pin	2
5	3-6781	Washer – Thrust	8
6	28-9290	Bushing Special	4
7	40-0330	Cushion – Rubber	2
8	40-9520	Spacer – Split	4
9	32122-28	Screw – Machine Truss Hd.	4
10	3296-2	Nut – Lock	4
11	302-5	Grease Fitting	2
12	3290-355	Pin – Hair	4

Ref. No.	Part No.	Description	No. Used
13	40-0370	Front Castor Fork	2
14	27-1050	Castor Wheel (Incl. Ref. # 15 & 17 - 20)	2
15	302-49	Grease Fitting	2
16	328-9	Screw – Cap, Hex Head	2
17	27-1170	Thrust Washer	4
18	27-1180	Bearing Retainer	4
19	27-1200	Spanner Bushing	2
20	27-1210	Roller Bearing	2
21	32153-6	Locknut	2
22	283-55	Pin Clevis	4
23	42-6200	Shim – Cushion	A/R

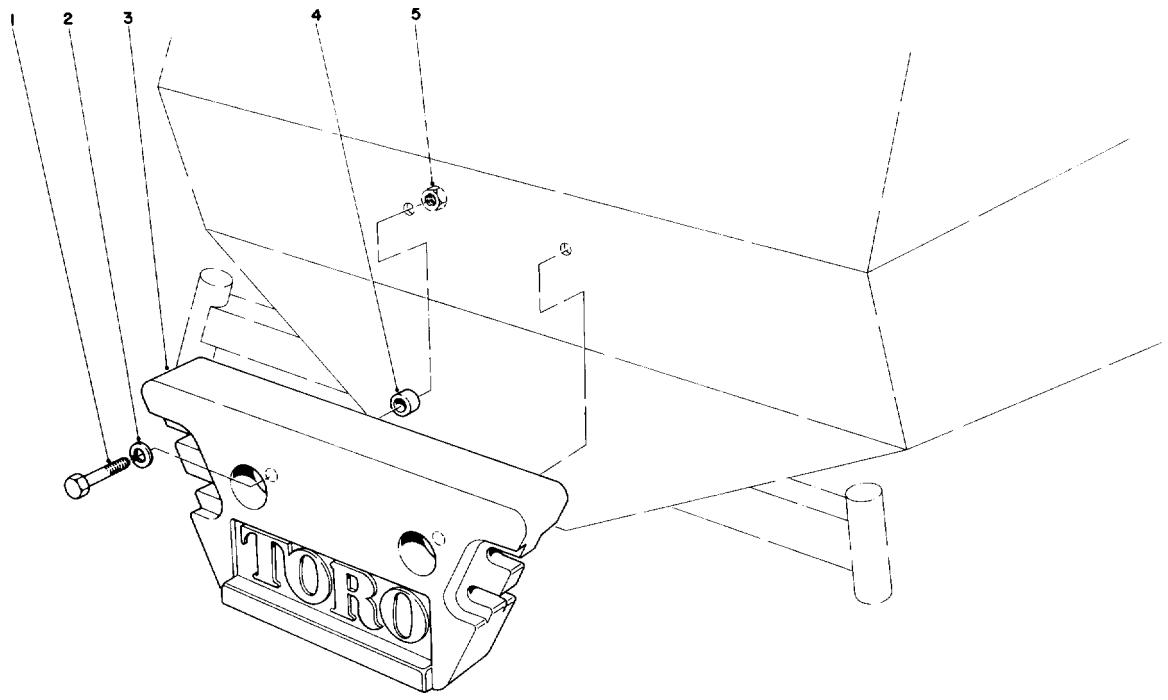

CUTTING UNIT MODEL NO. 30562 (Continued)

Ref. No.	Part No.	Description	No. Used
1	325-8	Screw – Cap, Hex Hd.	2
2	3253-7	Washer – Lock, Spring	2
3	24-5790	Rear Weight	1

Ref. No.	Part No.	Description	No. Used
4	3-8847	Spacer	2
5	3217-9	Nut – Hex	2

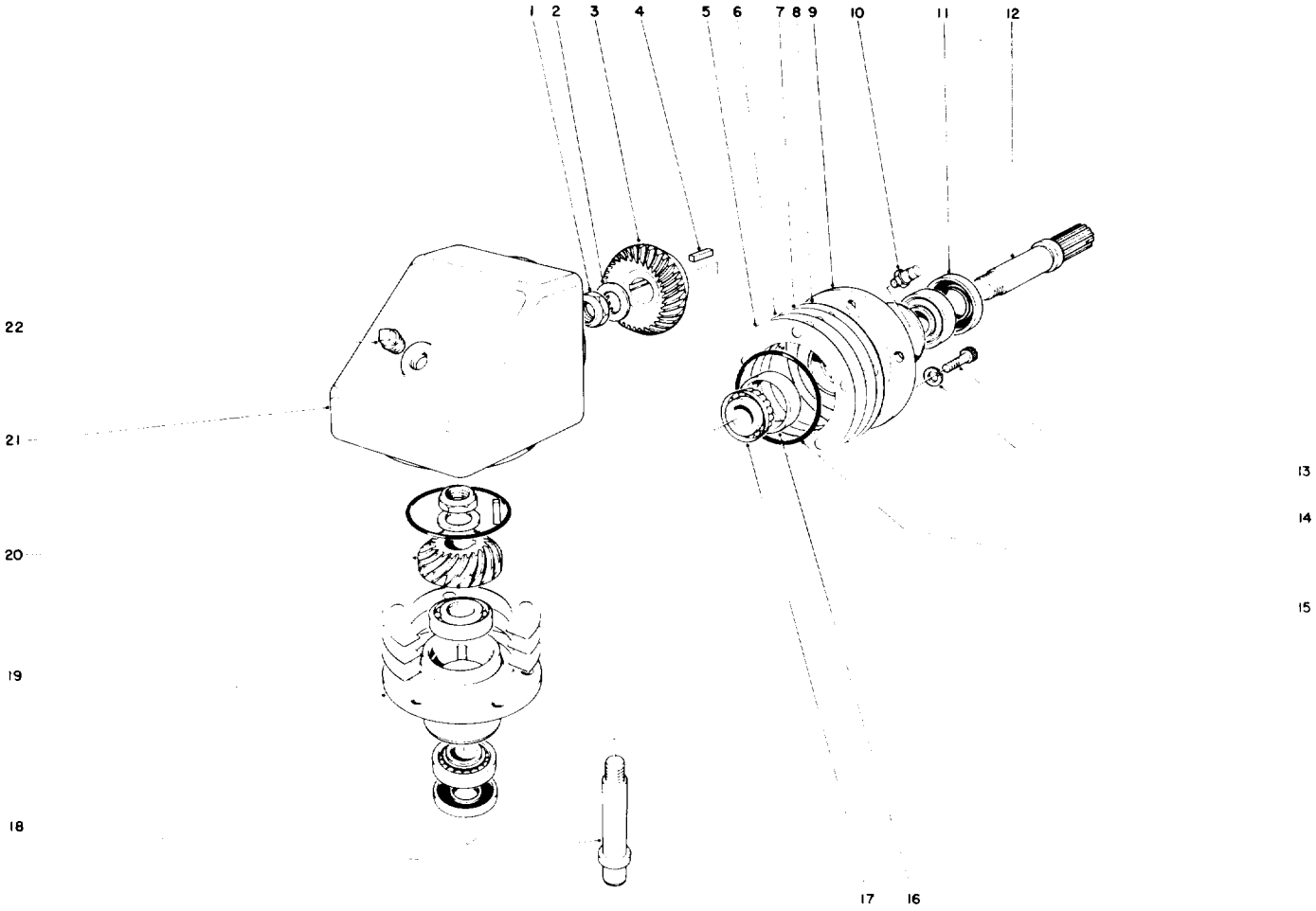

CUTTING UNIT MODEL NO. 30562 & 30555

Ref. No.	Part No.	Description	No. Used
1	3296-15	Nut	2
2	3-6514	Thrust Washer	2
3	26-1340	Gear – Spiral Bevel	1
4	18-6430	Square Key	2
5	26-1350	Shim .002 Thick Red	A/R
6	26-1360	Shim .005 Thick Blue	A/R
7	26-1370	Shim .015 Thick Pink	A/R
8	33-2040	Shim .020 Thick Yellow	A/R
9	26-1290	Bearing Housing – Input	1
10	302-14	Vent Plug	1
11	253-137	Oil Seal	2

Ref. No.	Part No.	Description	No. Used
12	26-1310	Shaft – Input	1
13	3274-7	Capscrew Socket Head	5
14	3253-21	Lockwasher	5
15	237-97	O-Ring	2
16	254-90	Bearing Cup	4
17	254-91	Bearing Cone	4
18	26-1320	Shaft – Output	1
19	26-1380	Bearing Housing – Output	1
20	26-1330	Pinion Spiral	1
21	26-1270	Gear Box	1
22	281-11	Pipe Plug Sq. Hd.	1

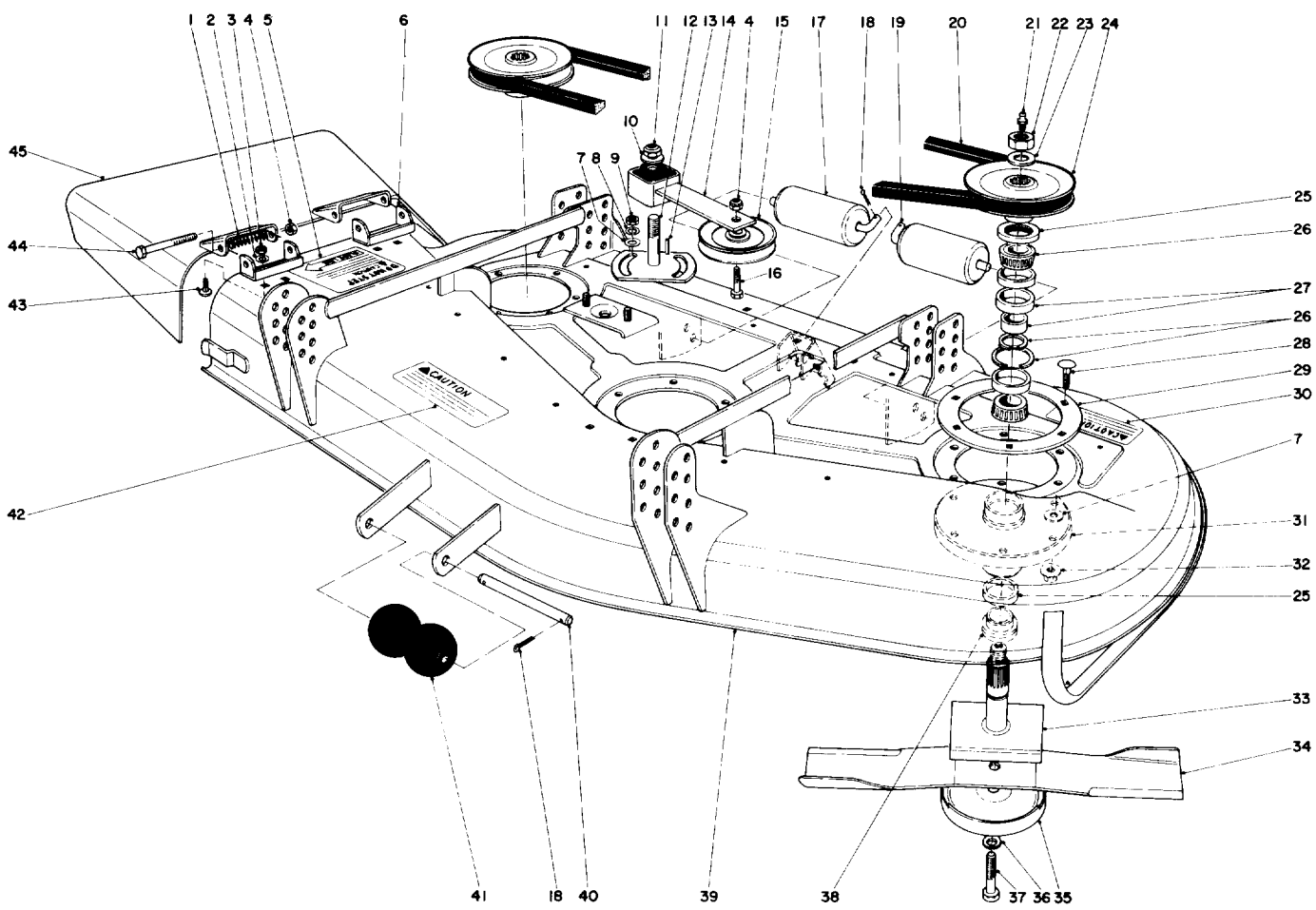

CUTTING UNIT MODEL NO. 30555

Ref. No.	Part No.	Description	No. Used
1	40-6230	Spring – Torsion	2
2	3253-4	Lockwasher	4
3	3217-6	Nut	4
4	3296-5	Locknut	3
5	40-5730	Decal – Caution	1
6	29-5590	Pivot Bracket – Deflector	2
7	3256-24	Washer – Flat	20
8	3253-21	Lockwasher	2
9	3218-3	Nut – Jam	2
10	3256-27	Washer – Flat	1
11	3296-33	Locknut	1
12	28-9060	Plate – Idler	1
13	5-1077	Key Square	1
14	27-8580	Idler Socket	1
15	27-1080	Pulley – Idler	1

Ref. No.	Part No.	Description	No. Used
16	3211-6	Capscrew	1
17	36-1740	Roller – Deck	2
18	3272-11	Cotter Pin	4
19	40-0340	Shaft – Rear Roller	2
20	27-1160	V-Belt	1
21	302-2	Grease Fitting	3
22	32146-20	Locknut	3
23	7-4150	Washer	3
24	27-0970	Pulley	3
25	253-139	Seal – Wave	6
26	27-0960	Bearing (Matched Set of Two)	3
27	27-5970	Spacer – Matched Set	3
28	3231-22	Carriage Bolt	18
29	27-7680	Ring – Deck Support	3
30	26-7970	Decal – Caution	1

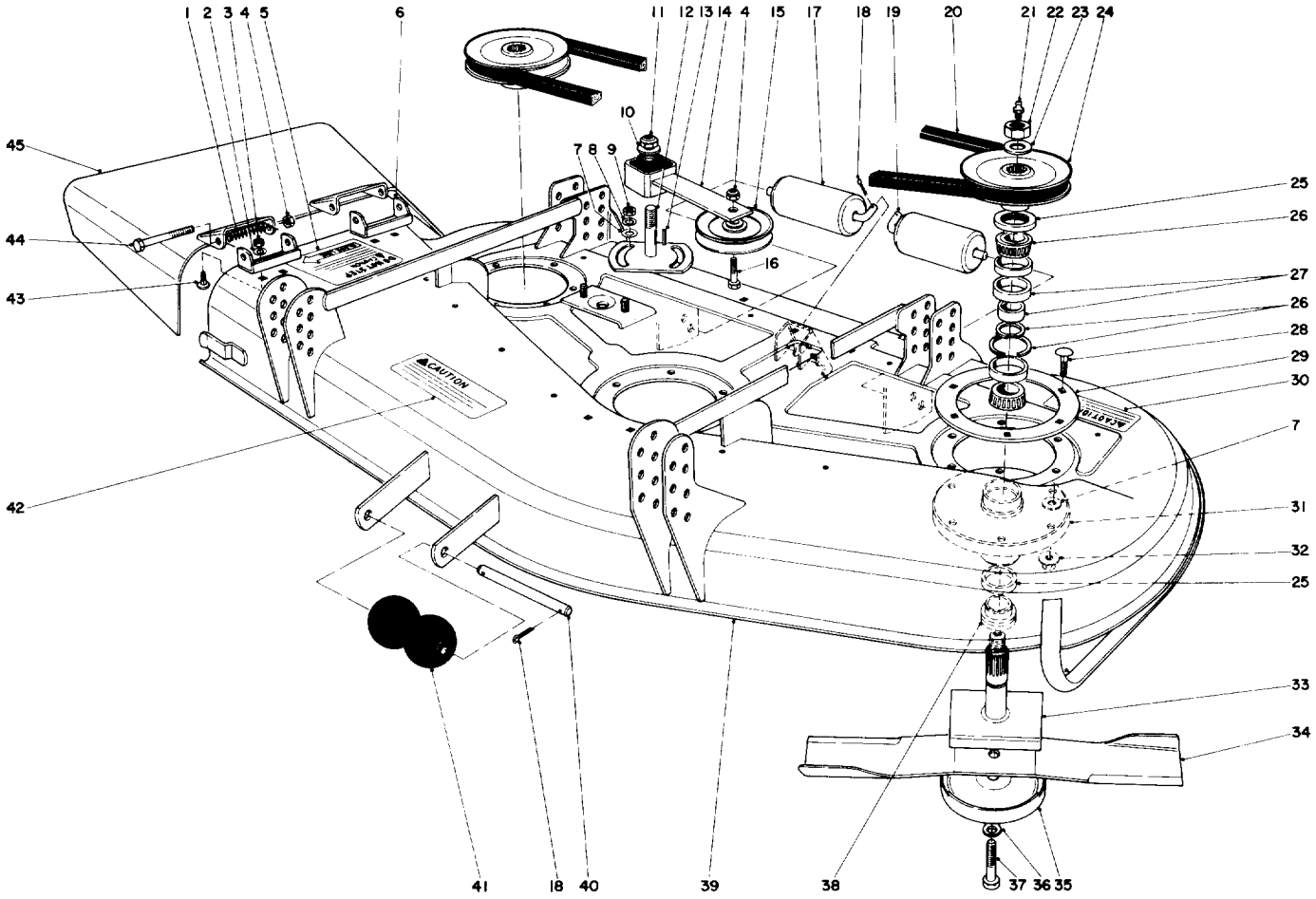

CUTTING UNIT MODEL NO. 30555 (Continued)

Ref. No.	Part No.	Description	No. Used
31	27-0880	Spindle Housing	3
32	32128-21	Locknut – Flange	18
33	27-0920	Spindle Shaft	3
34	27-0990	Blade	3
35	27-1000	Anti-Scalp Cup	3
36	3253-27	Lockwasher	3
37	44-2200	Capscrew	3
38	27-0950	Spacer – Spindle Bearing	3

Ref. No.	Part No.	Description	No. Used
39	40-0020	Cutting Deck	1
40	40-6400	Shaft – Roller	1
41	29-4820	Roller	2
42	26-7960	Decal – Caution	1
43	3230-20	Carriage Bolt	4
44	3211-15	Capscrew	2
45	40-6200	Grass Deflector	1
*	44-5480	Blade – High Sail (Optional)	3

*Not Illustrated

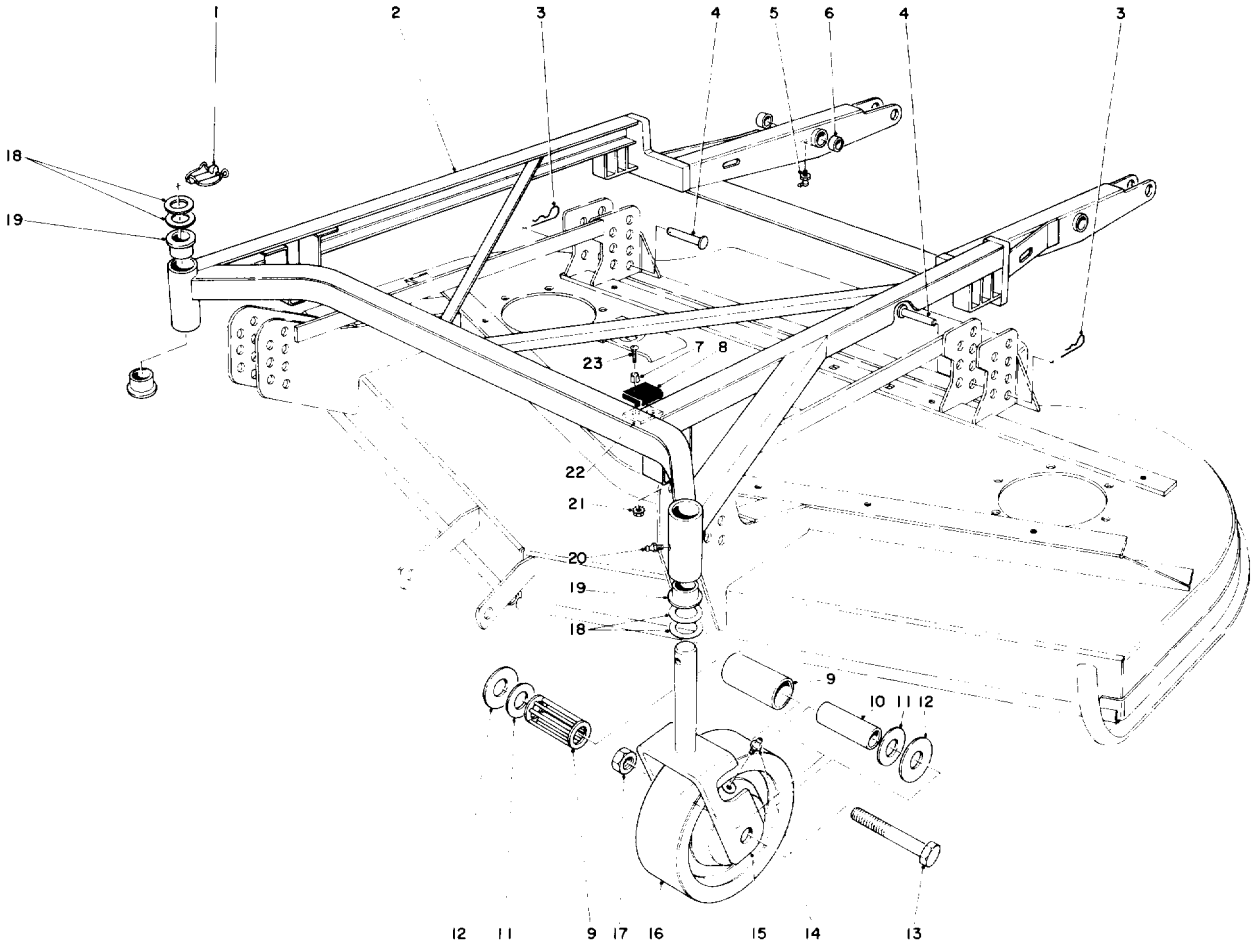

CUTTING UNIT MODEL NO. 30555 (Continued)

Ref. No.	Part No.	Description	No. Used
1	3290-384	Lynch Pin	2
2	44-2170	Frame – Deck Suspension (Incl. Ref. #5-6 & 19)	1
3	3290-355	Pin – Hair	4
4	283-55	Pin Clevis	4
5	302-40	Grease Fitting	2
6	256-101	Bushing	4
7	40-9520	Spacer – Split	4
8	40-0330	Cushion – Rubber	2
9	27-1210	Roller Bearing	2
10	27-1200	Spanner Bushing	2
11	27-1180	Bearing Retainer	4

Ref. No.	Part No.	Description	No. Used
12	27-1170	Thrust Washer	4
13	328-9	Capscrew	2
14	302-49	Grease Fitting	2
15	40-0370	Front Castor Fork	2
16	27-1190	Wheel	2
17	32153-6	Locknut	2
18	3-6781	Washer – Thrust	8
19	28-9290	Bushing – Special	4
20	302-5	Grease – Fitting	2
21	3296-2	Locknut	4
22	42-6200	Shim Cushion	A/R
23	32122-28	Machine Screw Truss Head	4

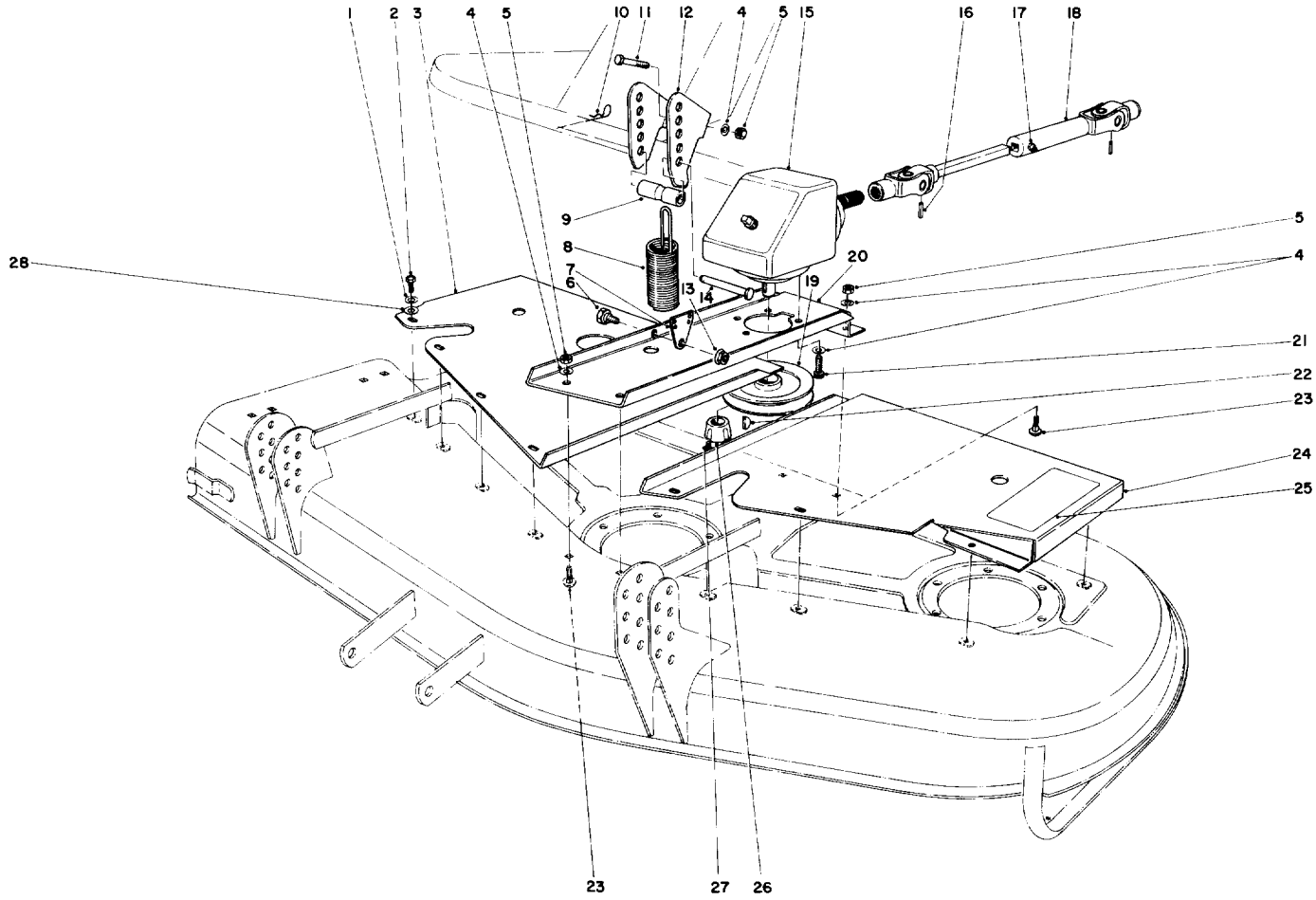

CUTTING UNIT MODEL NO. 30555 (Continued)

Ref. No.	Part No.	Description	No. Used
1	3253-3	Lockwasher	11
2	32104-114	Self Tapping Screw Hex Hd.	11
3	40-0410	Cover R.H.	1
4	3253-21	Lockwasher	11
5	3217-7	Nut	6
6	46-3380	Bolt – Shoulder	1
7	46-3190	End – Spring	1
8	46-3200	Spring – Extension	1
9	40-0300	Spacer	1
10	3290-355	Hair – Pin	1
11	323-10	Capscrew	2
12	46-2620	Bracket – Spring	1
13	3290-357	Nut – Lock Flange	1
14	283-55	Pin – Clevis	1

Ref. No.	Part No.	Description	No. Used
15	8-0909	Gear Box Assembly	1
16	32121-34	Roll Pin	2
17	302-5	Grease Fitting	1
18	27-4520	Universal Drive Shaft	1
19	27-6110	Pulley – Gear Box	1
20	40-0360	Base – Gear Box	1
21	3274-1	Capscrew – Socket Hd.	5
22	3257-5	Key – Woodruff	1
23	3231-21	Carriage Bolt	4
24	40-0390	Cover L.H.	1
25	42-6860	Decal – Height of Cut	1
26	27-6140	Bushing – Taper Lock	1
27	3245-9	Set Screw – Socket Hd.	1
28	3256-22	Washer – Flat	11

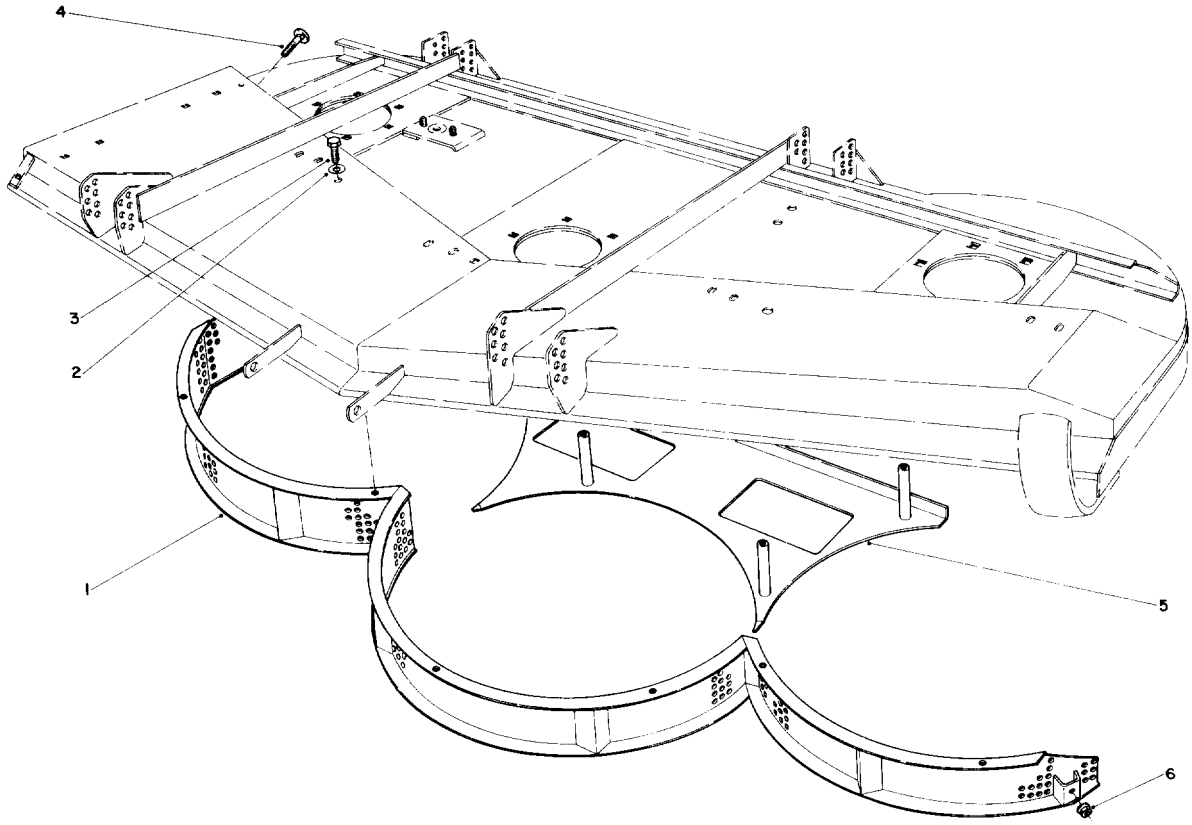

MULCHER KIT MODEL NO. 30792 (Optional)

(Used With Model 30562 Cutting Unit)

Ref. No.	Part No.	Description	No. Used
1	46-3010	Mulcher Screen	1
2	3253-21	Washer – Lock	10
3	323-4	Capscrew – Hex. Hd.	11

Ref. No.	Part No.	Description	No. Used
4	3230-2	Bolt – Carriage	1
5	46-3150	Shelf – Bottom Rear	1
6	3290-357	Nut – Lock Hex Flange	6

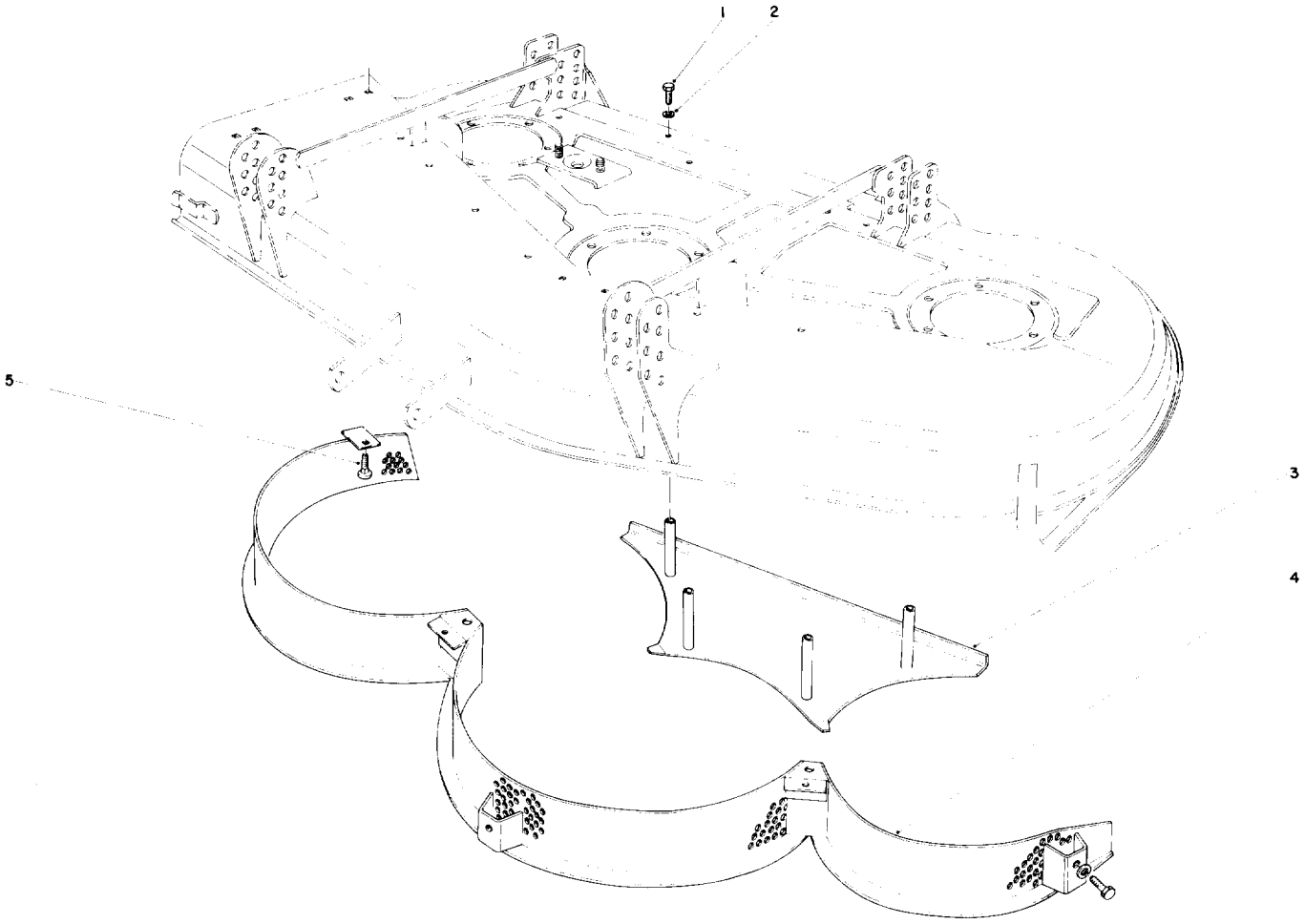

MULCHER KIT MODEL NO. 30700 (Optional)

(Used With Model 30555 Cutting Unit)

Ref. No.	Part No.	Description	No. Used
1	323-6	Capscrew	8
2	3253-21	Lockwasher	8
3	42-6340	Bottom Rear Shelf	1
4	42-6310	Mulcher Screen	1
5	3230-1	Carriage Bolt	1

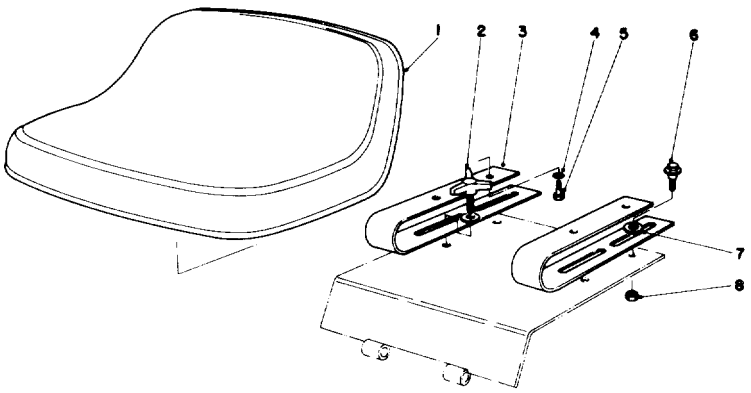

STANDARD SEAT KIT MODEL NO. 30765

Ref. No.	Part No.	Description	No. Used
1	27-5170	Seat	1
2	27-4570	Adjustment Handle	2
3	38-4030	Seat Spring	2
4	3253-4	Lockwasher	4

Ref. No.	Part No.	Description	No. Used
5	322-2	Capscrew	4
6	27-5240	Bolt Shoulder	2
7	3256-26	Flat Washer	4
8	3296-39	Locknut	2

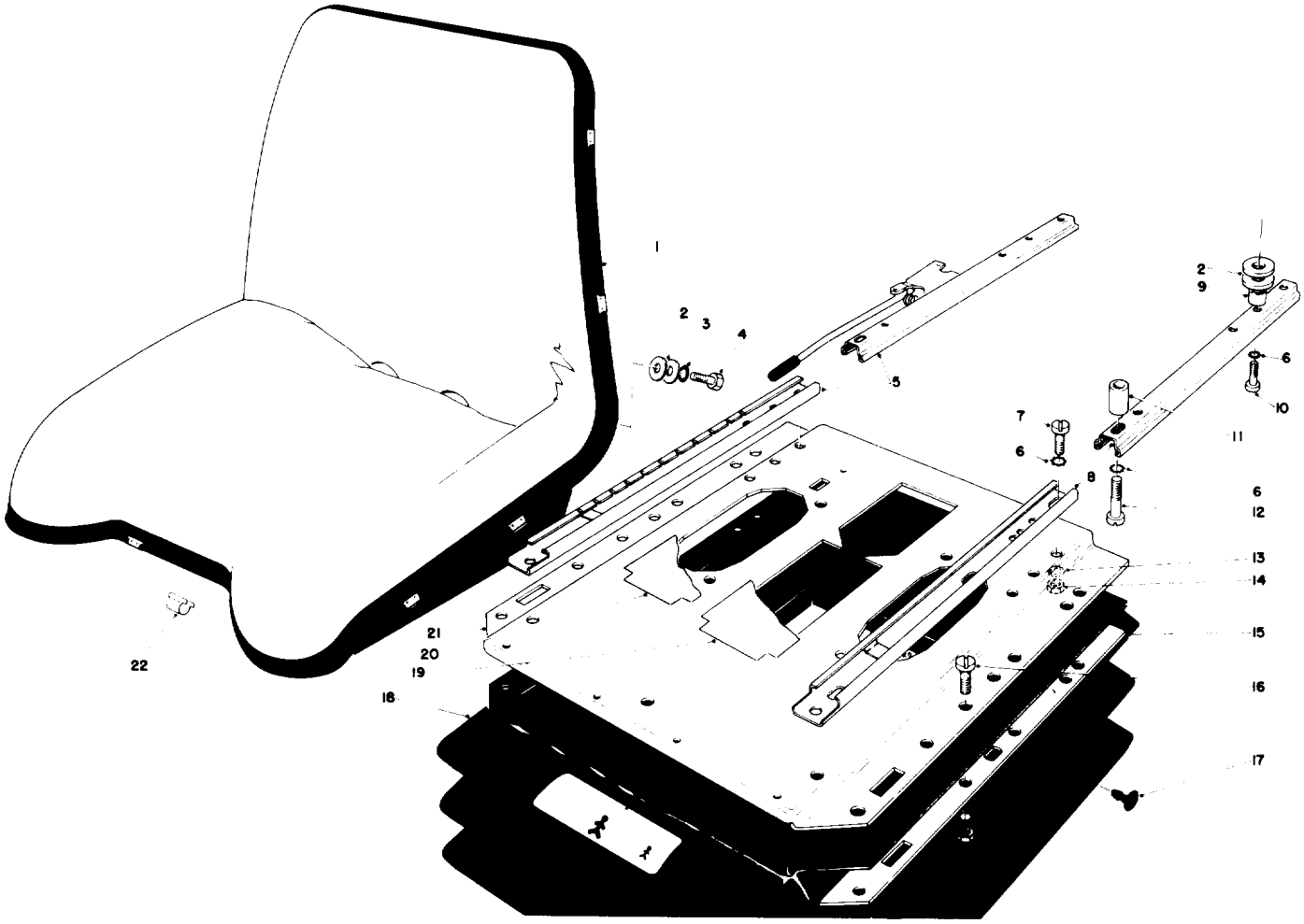

DELUXE SEAT KIT MODEL NO. 30766

Ref. No.	Part No.	Description	No. Used
1	39-5730	Seat Bucket Complete	1
2	39-5690	Washer 13 MM	8
3	39-5680	Serrated Washer	2
4	39-5670	Capscrew 7/16 – 20 U.N.F.	2
5	40-3790	Adjustment Track & Latch	1
6	40-3800	Serrated Washer	8
7	40-3810	Cylinder Bolt M8X16	4
8	40-3820	Adjustment Track	1
9	40-3830	Sleeve	2
10	40-3840	Cylinder Bolt M8X25MM	2
11	40-3850	Sleeve	2
12	40-3860	Cylinder Bolt	2

Ref. No.	Part No.	Description	No. Used
13	40-3870	Spring Washer	6
14	40-3880	Nut M8	6
15	40-3890	Trim	2
16	39-9220	Capscrew M8X16	6
17	39-5710	Plug	24
18	40-3900	Rubber Bellows	1
19	40-3910	Cover – Center	1
20	40-3920	Cover	2
21	40-3930	Upper Suspension Plate Complete	1
22	39-9540	Outside Bead Clip	13
*	37-9630	Seat ASM – Complete	1

*Not Illustrated

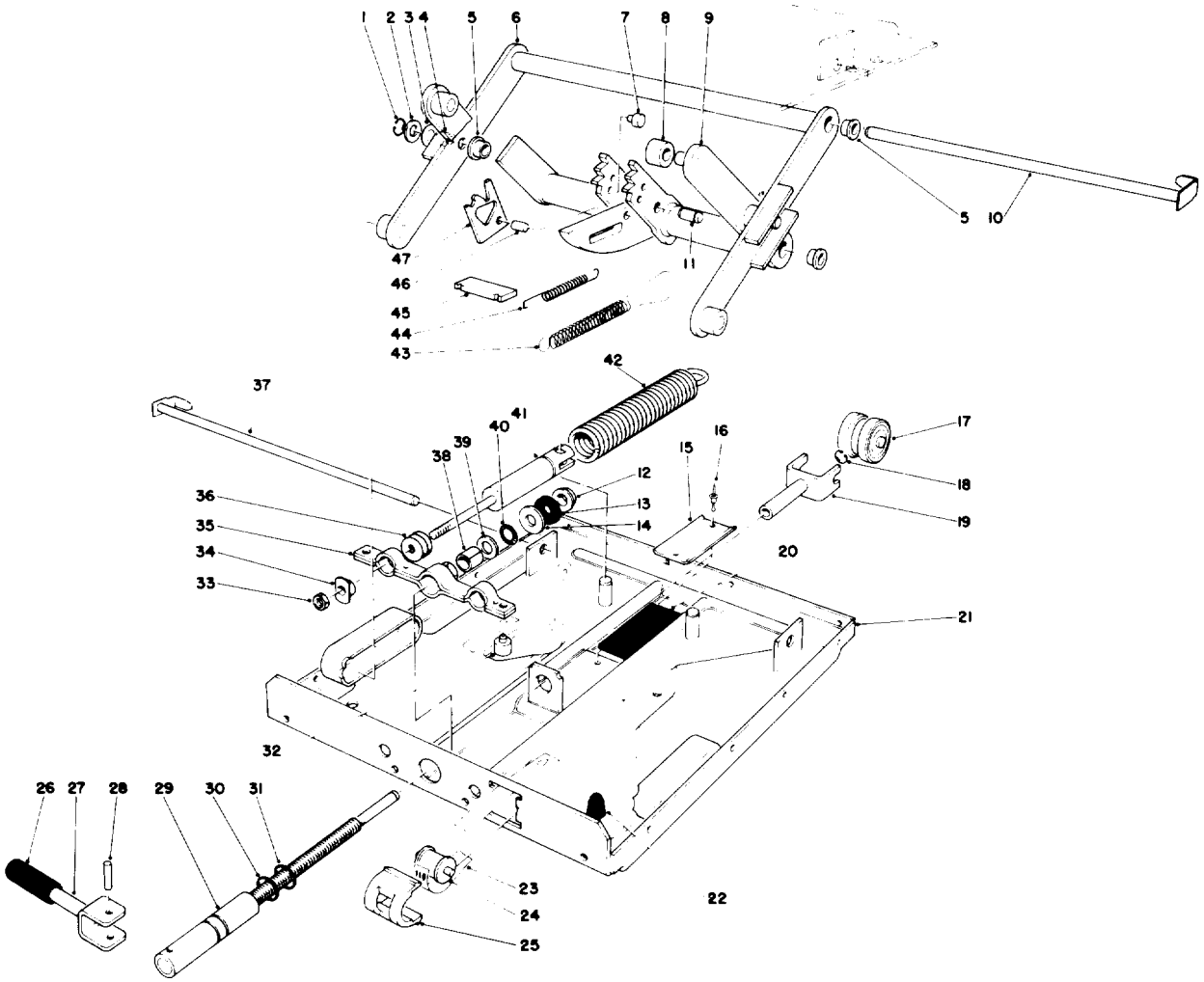

DELUXE SEAT KIT MODEL NO. 30766 (Continued)

Ref. No.	Part No.	Description	No. Used
1	40-3950	Washer	2
2	39-9500	Washer 13 MM	2
3	40-3960	Washer	2
4	40-3970	Bearing Bushing	2
5	40-3980	Bearing	4
6	40-3990	Swing Arm – Outside	1
7	40-4000	Bolt	2
8	40-4010	Roller	4
9	40-4020	Swing Arm Inside	1
10	40-4030	Pin	1
11	40-4040	Grooved Locking Pin 08X16MM	2
12	40-4050	Sleeve	1
13	40-4060	Rubber Washer	1
14	40-4070	Washer 8 MM	1
15	40-4080	U-Track	1
16	40-4090	Plate 4X 10MM	2
17	40-4100	Trible-Bearing	1
18	39-9310	Retaining Ring	1
19	40-4110	Fork	1
20	40-4120	Rubber Plate	1
21	40-4130	Lower Suspension Plate – Complete (Incl. Ref. #15 - 16 & 20)	1
22	39-9520	Rubber Bumper	2

Ref. No.	Part No.	Description	No. Used
23	40-4140	Weight Indicator Band	1
24	40-4150	Roller	1
25	40-4160	Guide Sleeve	1
26	40-4170	Handle	1
27	40-4180	Toggle	1
28	40-4190	Grooved Pin 5X28MM	1
29	40-4200	Pin	1
30	40-4210	Rubber Ring 14MM Black	1
31	40-4220	Rubber Ring 14MM Red	1
32	40-4230	Plug	1
33	40-4240	Nut	2
34	40-4250	Weld Nut	2
35	40-4260	Spring Bracket	1
36	40-4270	Threaded Rod	2
37	40-4280	Pin	1
38	40-4290	Sleeve 14X 1X 19MM	1
39	40-4300	Washer	1
40	40-4310	Thrust Needle Bearing	1
41	40-4320	Shock Absorber	2
42	40-4330	Coil Spring	2
43	40-4340	Coil Spring	1
44	40-4350	Coil Spring	2
45	40-4360	Plate	1
46	40-4370	Bolt	1
47	40-4380	Release Bracket	2

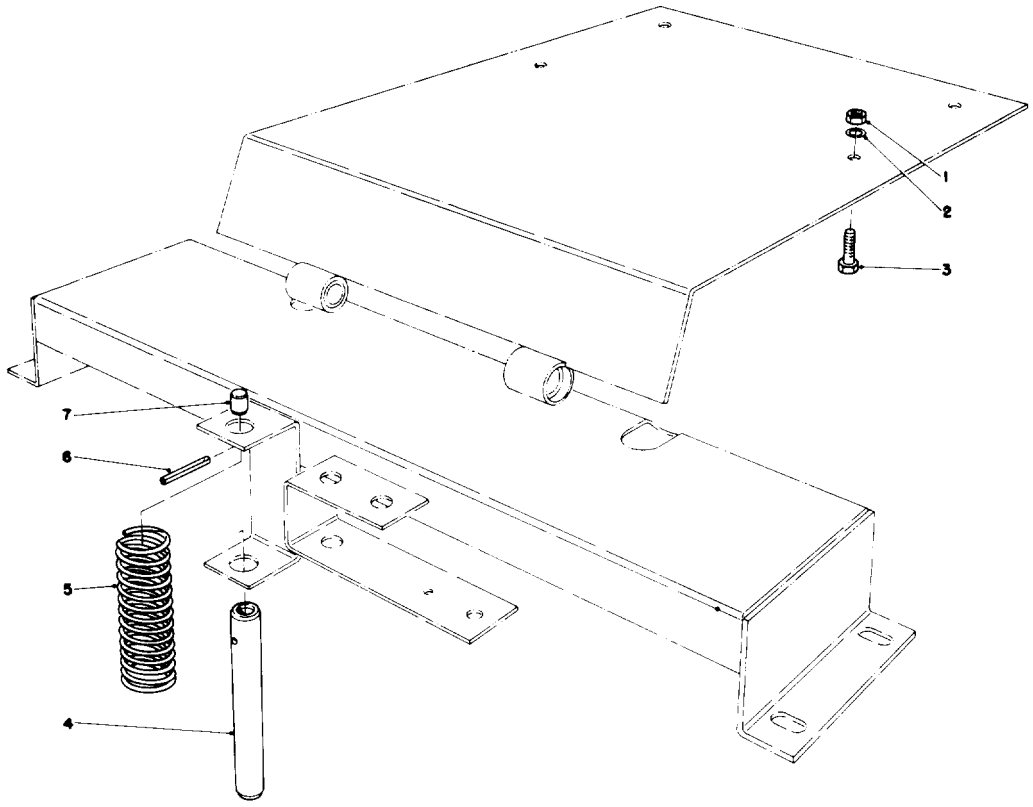

DELUXE SEAT KIT MODEL NO. 30766 (Continued)

Ref. No.	Part No.	Description	No. Used
1	3217-6	Nut	4
2	3253-24	Lockwasher	4
3	322-3	Capscrew	4
4	27-9870	Pin – Seat Switch	1

Ref. No.	Part No.	Description	No. Used
5	37-9780	Spring – Compression	1
6	32121-6	Spring – Pin	1
7	28-6180	Pin – Plastic	1

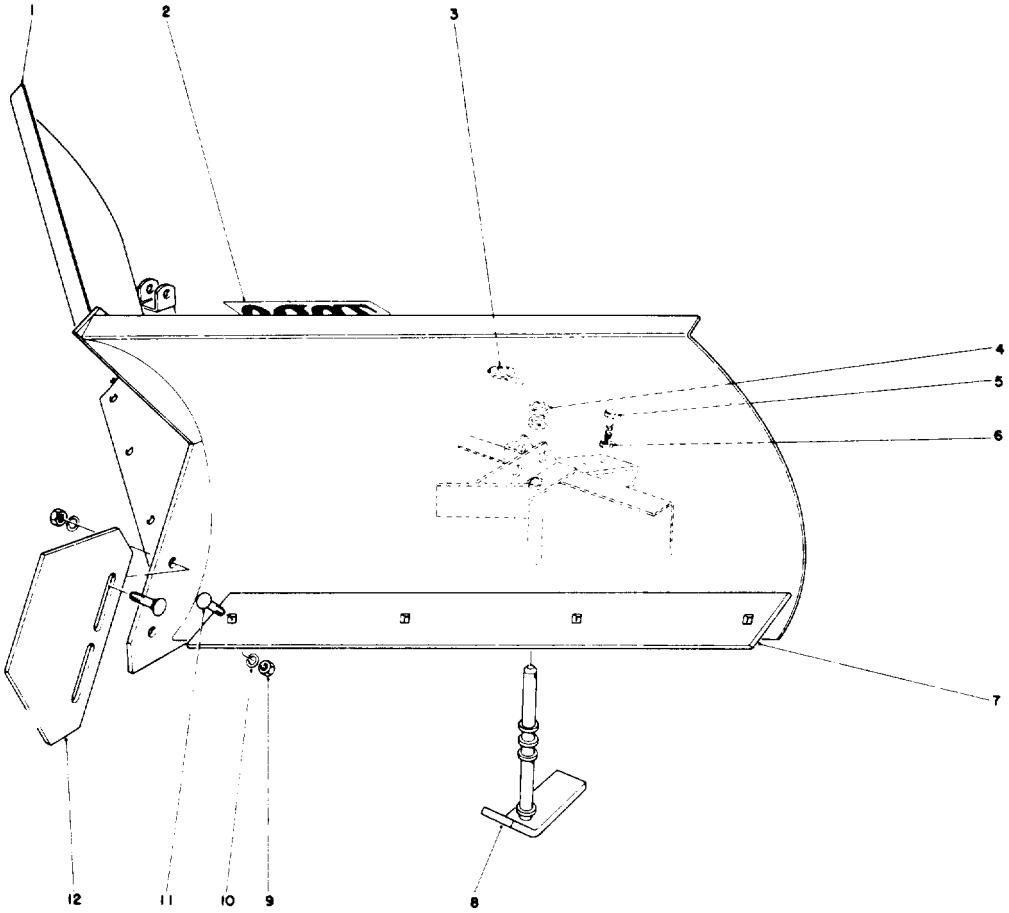

V-PLOW MODEL NO. 30750 (Optional)

Ref. No.	Part No.	Description	No. Used
1	23-9960	V-Plow	1
2	18-2180	Decal	1
3	3290-243	Lynch Pin	2
4	20-4370	Spacer Tubes	10
5	325-6	Capscrew	1
6	3218-5	Jam Nut	1

Ref. No.	Part No.	Description	No. Used
7	24-5570	Scraper Blade	2
8	24-5540	Skid	2
9	3217-9	Nut	10
10	3253-7	Lockwasher	10
11	3233-2	Carriage Bolt	10
12	24-5530	Nose Skid	1

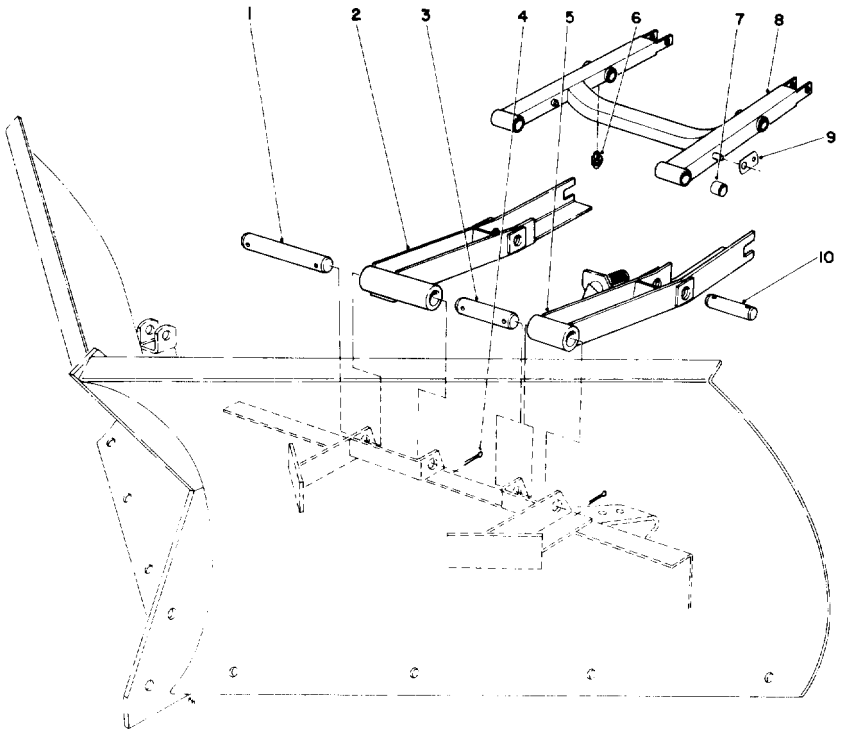

V-PLOW INSTALLATION NO. 30755 (Optional)

Ref. No.	Part No.	Description	No. Used
1	28-5490	Pin R.H.	1
2	28-5510	Push Arm R.H.	1
3	25-1350	Pin L.H.	1
4	3272-23	Cotter Pin	8
5	28-5500	Push Arm L.H.	1
6	302-53	Grease Fitting	2

Ref. No.	Part No.	Description	No. Used
7	256-101	Bushing	8
8†	27-4270	Lift Arm (Incl. Ref. #6 & 7)	1
9†	27-5270	Strap Brake Spring	2
10	28-6460	Pin	2
*	28-5470	Tire Chains	2

*Not Illustrated
†Parts must be ordered for mounting V-Plow on Model No. 30775 order parts separately.

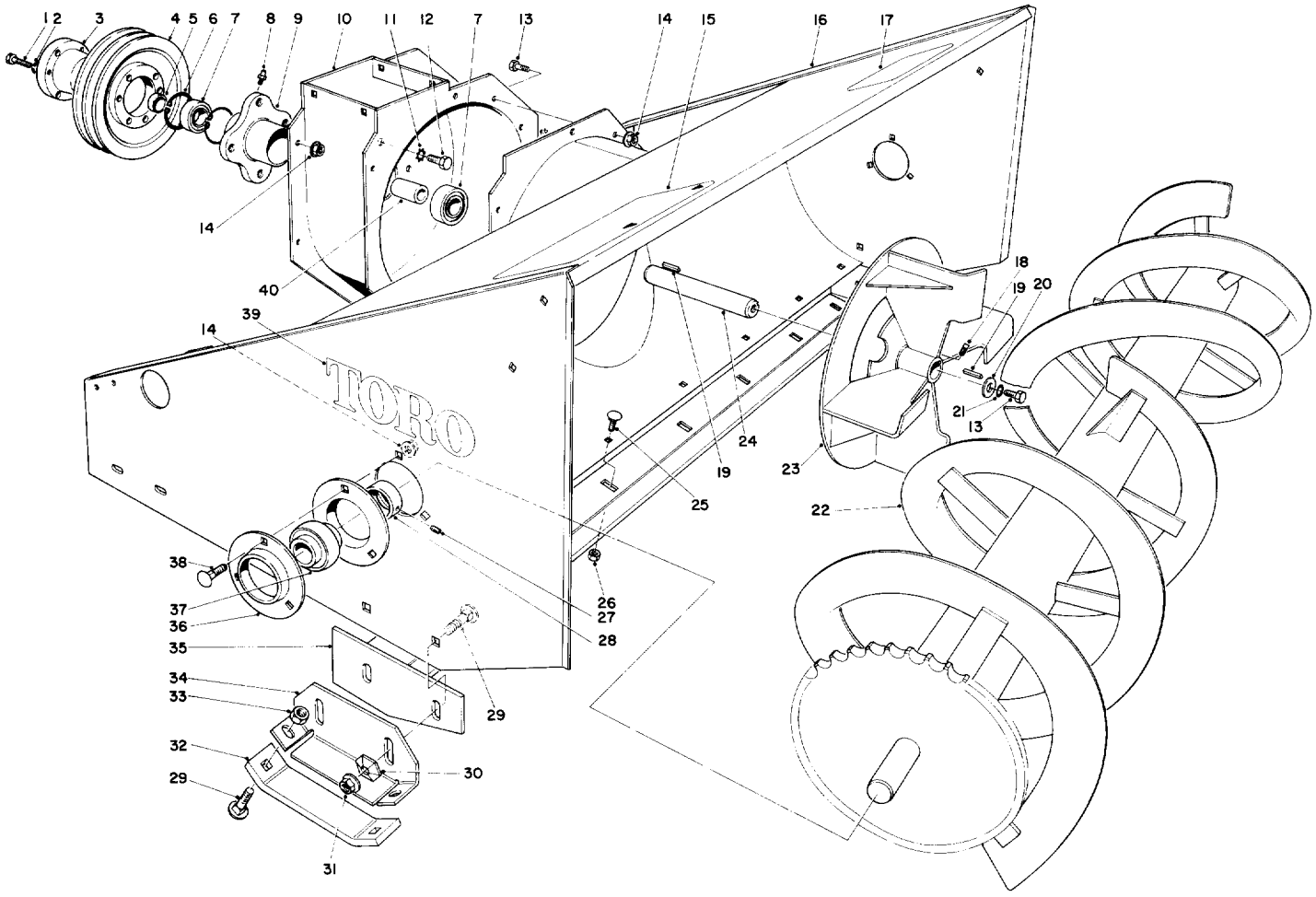

48" SNOWTHROWER MODEL NO. 30570 (Optional)

Ref. No.	Part No.	Description	No. Used
1	321-3	Screw, Cap Hex Hd.	3
2	3253-3	Lockwasher	3
3	46-3650	Hub – "QD" (Incl. Ref. #1 & 2)	1
4	46-3640	Pulley – "QD"	1
5	37-5170	Spacer	1
6	32151-20	Snap Ring	2
7	251-276	Bearing	2
8	302-11	Grease Fitting	1
9	32-4950	Housing Spindle	1
10	39-5030	Blower Housing	1
11	3255-2	Lockwasher	4
12	3213-20	Capscrew	4
13	322-3	Capscrew	9
14	32128-20	Flange Nut	16
15	46-5860	Decal – Rear Weight	1
16	39-5010	Auger Housing	1
17	29-6350	Decal – Warning	1
18	3243-1	Square Head Setscrew	2
19	31-0700	Square Key	2
20	3-6715	Flat Washer	1

Ref. No.	Part No.	Description	No. Used
21	3253-4	Lockwasher	1
22	32-6140	Auger	1
23	32-6130	Impeller	1
24	37-5240	Shaft – Impeller	1
25	3230-19	Carriage Bolt	7
26	3296-47	Locknut	7
27	3245-1	Set Screw	2
28	251-77	Locking Collar	2
29	3231-2	Carriage Bolt	8
30	3290-224	Pyramidal Lockwasher	4
31	32128-18	Flange Nut	4
32	37-5110	Skid – Shoe	2
33	32152-2	Locknut	4
34	37-4950	Skid – Mount Plate	2
35	37-5380	Scraper	1
36	251-287	Flange	4
37	251-253	Bearing (Incl. Ref. #27 & 28)	2
38	3230-18	Carriage Bolt	6
39	27-4600	Decal – Toro	2
40	31-0540	Sleeve	1

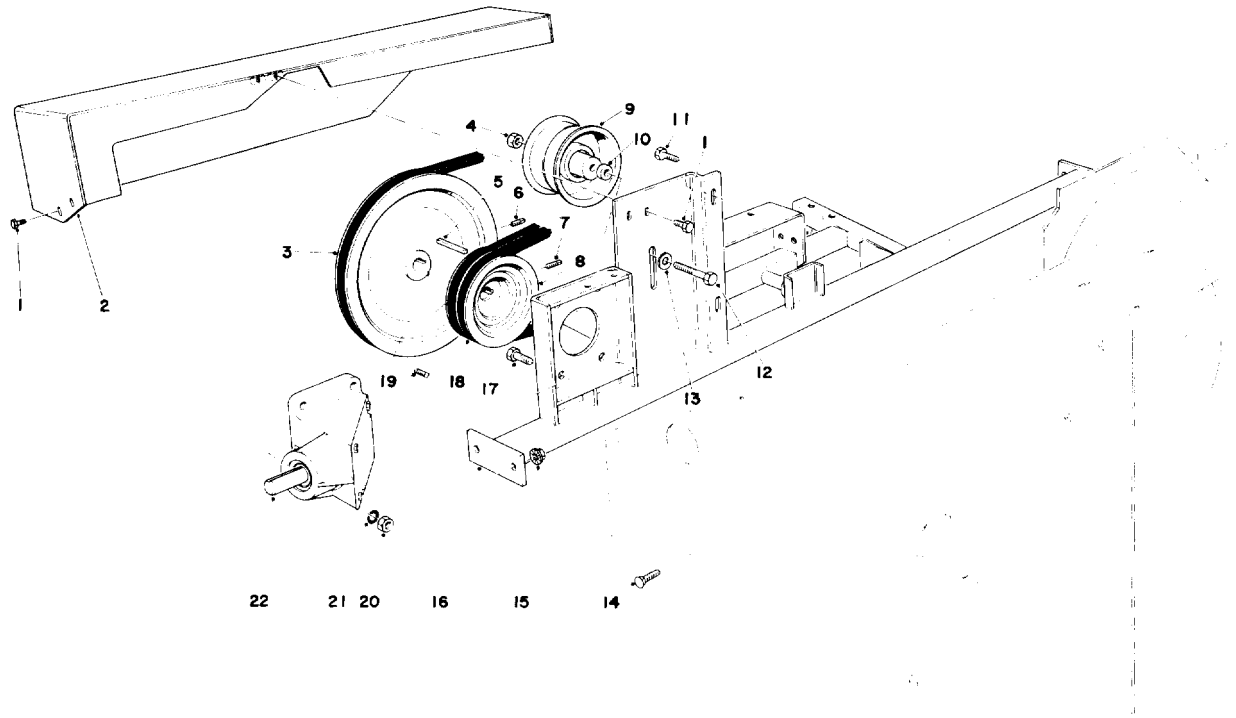

48" SNOWTHROWER MODEL NO. 30570 (Optional)

Ref. No.	Part No.	Description	No. Used
1	3234-13	Flange Screw	4
2	37-5510	Belt Shield	1
3	32-4480	Sheave	1
4	32152-2	Locknut	1
5	3-0971	Key	1
6	3242-2	Sq. Hd. Setscrew	1
7	3242-6	Sq. Hd. Setscrew	2
8	37-5090	Pulley – Gear Box	1
9	37-5760	Idler Pulley	1
10	37-5210	Spacer – Idler	1
11	322-3	Capscrew	2

Ref. No.	Part No.	Description	No. Used
12	323-11	Capscrew	1
13	3256-3	Flatwasher	1
14	3231-30	Carriage Bolt	4
15	3290-357	Hex Locknut	4
16	37-5400	Cross Brace	1
17	323-7	Capscrew	4
18	37-5670	V-Belt (Matched Set of 2)	1
19	3242-4	Sq. Hd. Setscrew	1
20	3217-7	Hexnut	4
21	3253-21	Lockwasher	4
22	37-5410	Gear Box Assembly	1

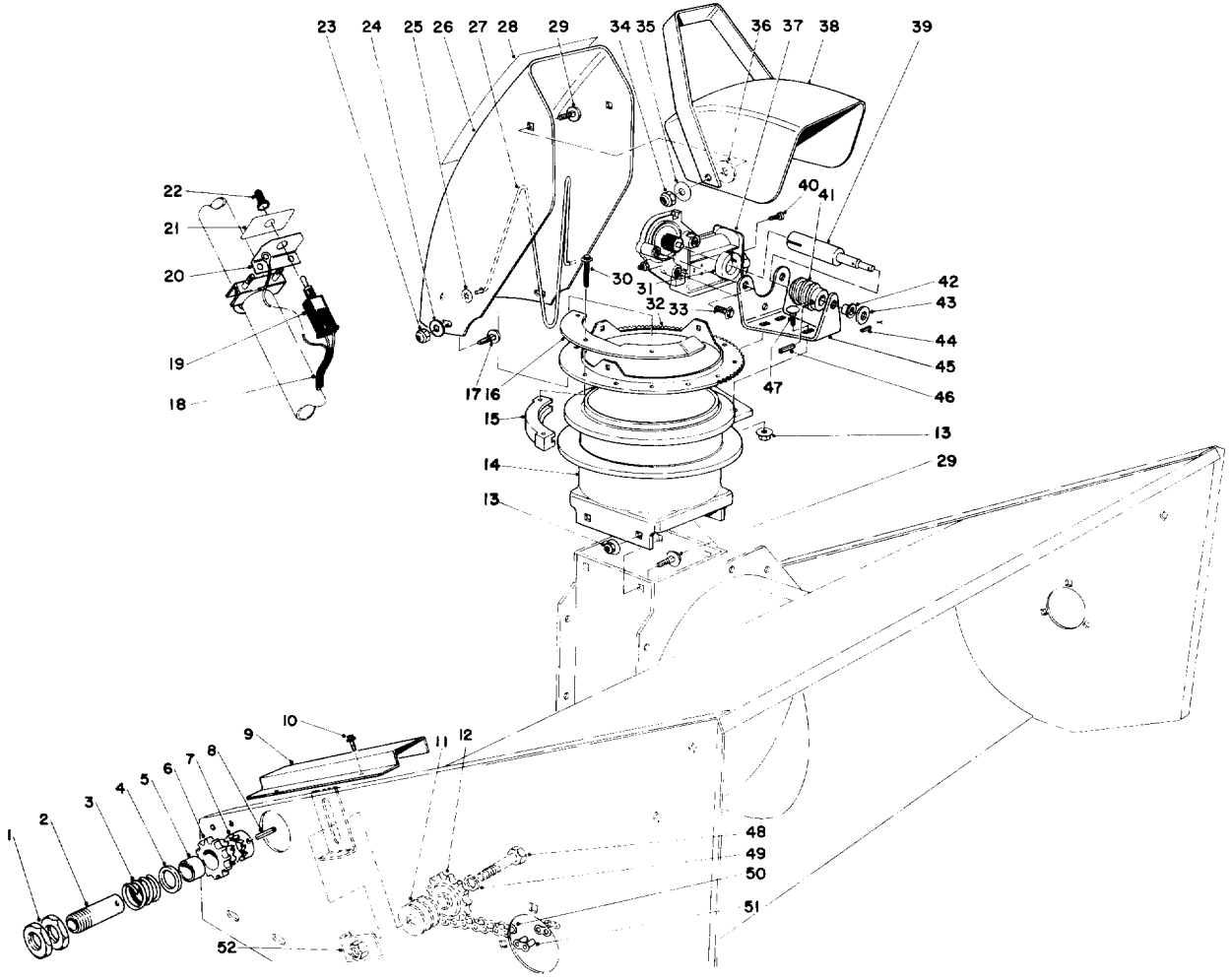

48" SNOWTHROWER MODEL NO. 30570 (Optional)

Ref. No.	Part No.	Description	No. Used
1	37-5720	Nut – Thin	2
2		Clutch Sleeve	1
3		Spring Compression	1
4		Spacer	1
5		Bushing	1
6		Clutch Sprocket	1
7		Clutch Collar	1
8	32121-34	Roll Pin	1
9	32-1620	Chain Cover	1
10	32104-76	Self-Tapping Screw	2
11	3256-7	Flatwasher	3
12	30-0090	Idler Sprocket	1
13	3290-357	Locknut	7
14	39-4870	Chute Transition	1
15	25-5450	Swivel Block	6
16	39-4900	Stop-Chute Rotator	1
17	3230-18	Carriage Bolt	3
18	39-4990	Wire Harness	1
19		Toggle Switch	1
20		Toggle Switch Mount	1
21	39-4970	Decal – Chute Rotation	1
22	218-473	Toggle Switch Boot	1
23	3296-47	Locknut	3
24	3256-23	Flatwasher	3
25	3290-326	Pushnut	2
26	25-5440	Upper Chute	1
27	12-2040	Chute Wire	1
28	29-6350	Decal – Warning	1

Ref. No.	Part No.	Description	No. Used
29	3231-27	Carriage Bolt	6
30	27-0220	Special Screw	12
31	39-4940	Collar	1
32	39-4890	Ring – Chute Swivel	1
33	3234-13	Flange Screw	3
34	32152-2	Locknut	2
35	3290-340	Belleville Washer	2
36	20-4320	Rubber Washer	2
37	39-4920	Gearmotor	1
38	11-7120	Deflector	1
39	39-4930	Shaft – Worm Gear	1
40	3274-26	Socket Head Screw	1
41	8-8600	Worm Gear	1
42	256-255	Bushing	1
43	3256-1	Flatwasher	2
44	32121-20	Roll Pin	1
45	39-4910	Motor Mount	1
46	32121-50	Roll Pin	1
47	3231-2	Carriage Bolt	3
48	327-6	Capscrew	1
49	3253-8	Lockwasher	1
50	30-0160	Chain – Roller	1
51	2710-11	Connecting Link	1
52	30-0450	Nut Plate	1
*	37-5640	Slip Clutch (Incl. Ref. #1-8)	1
*	39-4950	Toggle Switch Assembly (Incl. Ref. #19-22)	1

*Not Illustrated

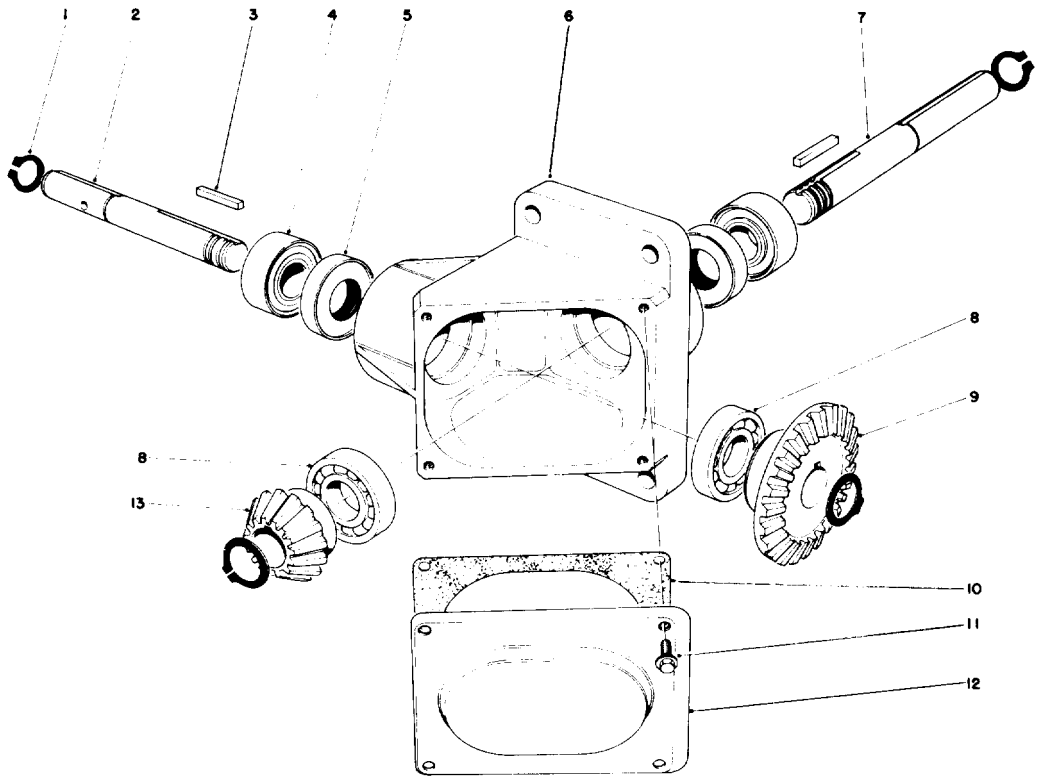

48" SNOWTHROWER MODEL NO. 30570 (Optional)

Ref. No.	Part No.	Description	No. Used
1	32120-72	Retaining Ring	4
2	30-0590	Shaft	1
3	30-0660	Key	2
4	30-0630	Bearing	2
5	30-0640	Oil Seal	2
6	30-0650	Housing	1
7	37-5840	Shaft	1

Ref. No.	Part No.	Description	No. Used
8	30-0620	Bearing	2
9	30-0670	Gear	1
10	30-0680	Gasket – Cover Plate	1
11	12-3270	Screw Special	4
12	30-0690	Cover Plate	1
13	30-0600	Gear	1

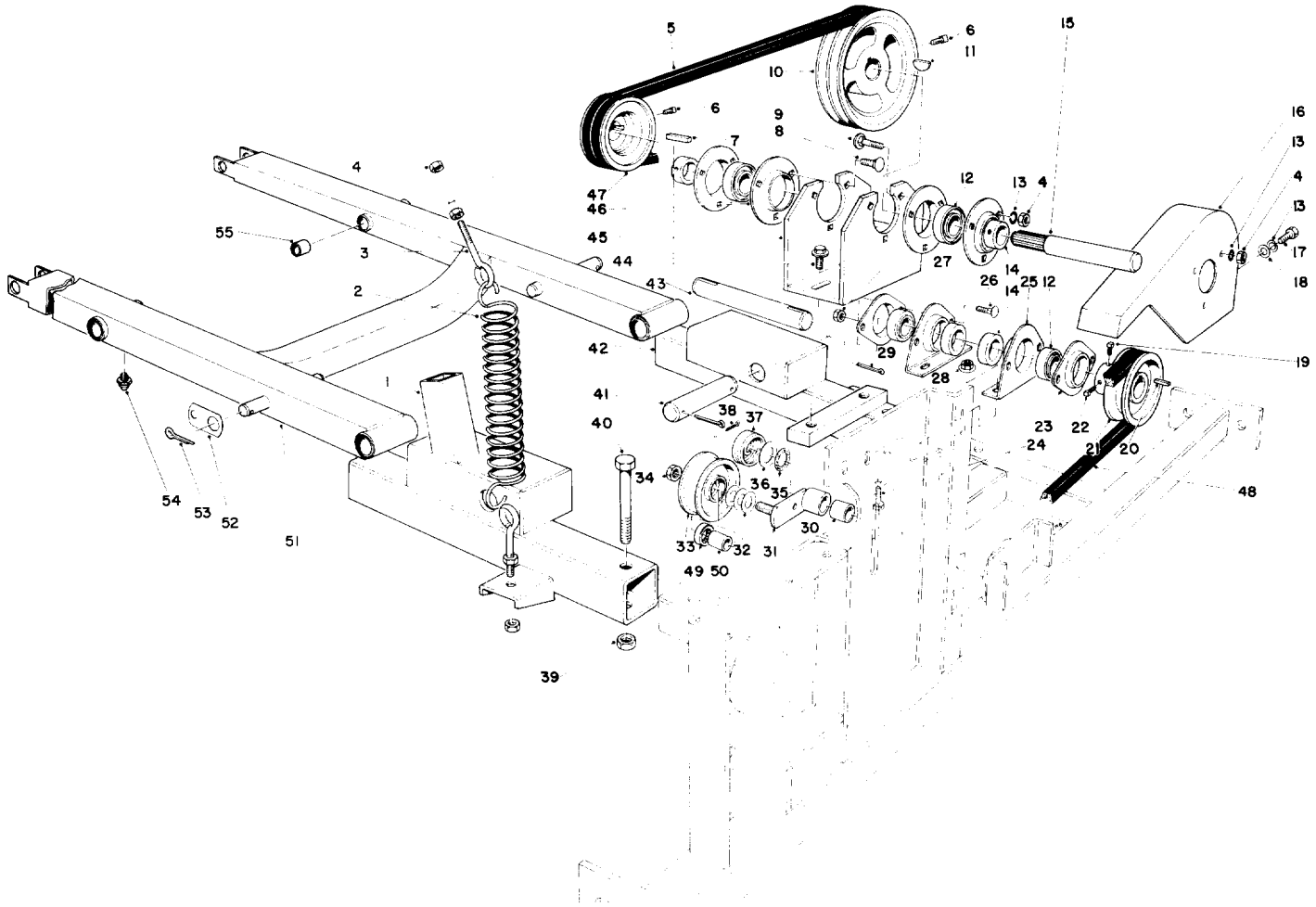

48" SNOWTHROWER ADAPTER KIT MODEL NO. 30572

Ref. No.	Part No.	Description	No. Used
1	37-5600	Adapter R.H.	1
2	30-1020	Spring – Extension	2
3	30-0980	Eye Bolt	4
4	3217-6	Hex Nut	17
5	37-5650	V-Belt (Matched Set)	1
6	3242-6	Square Head Setscrew	4
7	3-3267	Square Key	1
8	3230-16	Carriage Bolt	3
9	3230-4	Carriage Bolt	3
10	37-5340	Pulley	1
11	3257-8	Key – Woodruff	1
12	251-253	Bearing (Incl. Ref. #14)	4
13	3253-24	Lockwasher	11
14	251-77	Collar	4
15	39-4370	Jackshaft	1
16	37-5580	Belt Shield	1
17	322-3	Capscrew	2
18	3256-23	Washer	2
19	3242-1	Square Head Setscrew	1
20	5-7280	Key – Square	1
21	32-1790	Sheave	1
22	3242-2	Square Head Setscrew	1
23	251-285	Flange	2
24	323-4	Capscrew	4
25	251-286	Flange	2
26	3230-1	Carriage Bolt	4
27	32128-20	Nut – Flange	4
28	3290-357	Nut – Flange	4
29	3272-52	Cotter Pin	4
30	31-0680	Bushing Bronze	1

Ref. No.	Part No.	Description	No. Used
31	37-5470	Idler Arm (Incl. Ref. #30)	1
32	3256-27	Washer	3
33	32-1450	Idler Pulley	1
34	30-8670	Locknut	1
35	31-7620	Felt Washer	1
36	31-0210	Washer	1
37	31-9500	Spring – Torsion	1
38	3272-23	Pin – Cotter	1
39	32152-2	Locknut	2
40	323-11	Capscrew	2
41	37-5160	Pin	2
42	37-5620	Adapter L.H.	1
43	37-5250	Jackshaft	1
44	3234-12	Flange Screw	2
45	37-5610	Jackshaft – Support	1
46	251-287	Flange	4
47	37-5070	Pulley	1
48	37-5660	V-Belt	1
49	31-0530	Ball Bearing	1
50	30-5440	Sleeve	1
51†	27-4270	Lift Arm (Incl. Ref. # 54 & 55)	1
52†	27-5270	Strap Brake Spring	2
53†	3272-12	Cotter Pin	2
54	302-53	Grease Fitting	2
55	256-101	Bushing	8
*	32-2820	Idler Assembly (Incl. Ref. #33 & 49-50)	1
*	37-5790	Reflector	2
*	32104-42	Self-Tapping Screw	4

*Not Illustrated †Parts must be ordered for mounting 48" Snowthrower on Model No. 30775, order parts separately.

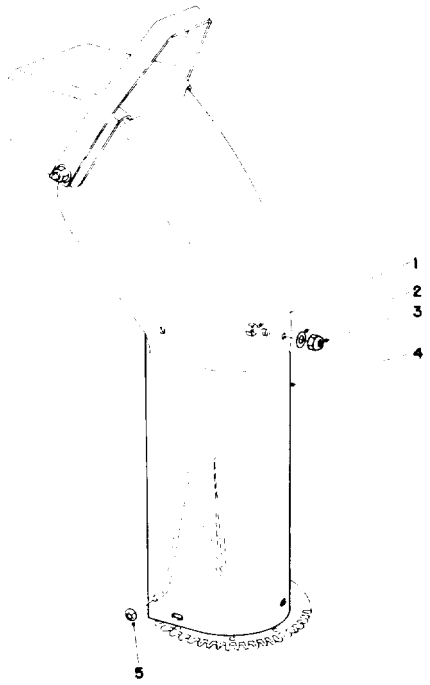

CHUTE EXTENSION KIT 26-1100

Ref. No.	Part No.	Description	No. Used
1	322-2	Hex Hd. Capscrew	6
2	3256-23	Washer	6
3	32152-1	Locknut	6

Ref. No.	Part No.	Description	No. Used
4†		Upper Chute Extender	1
5	3290-326	Pushnuts	2

†Not available, for reference only.

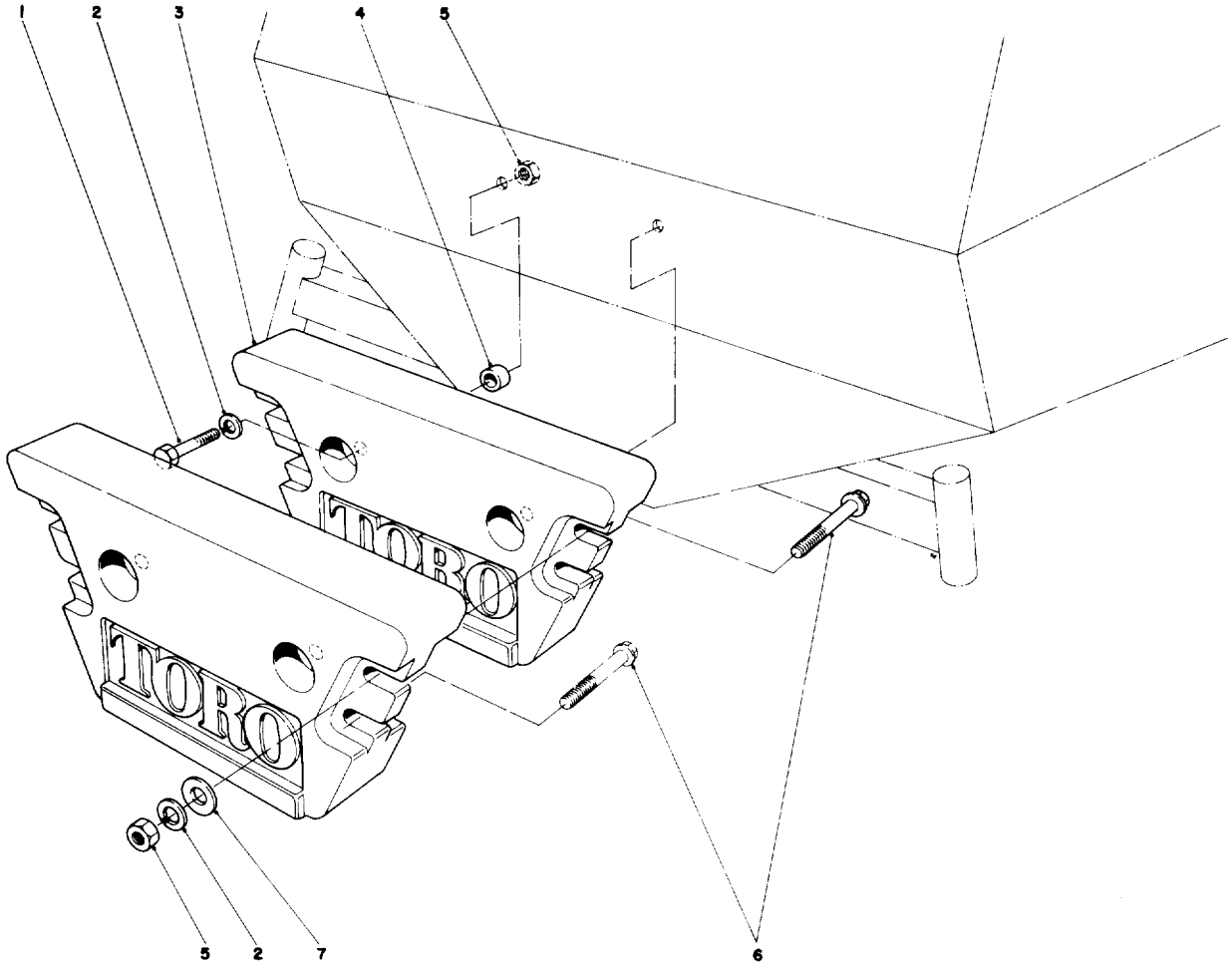

REAR WEIGHT KIT MODEL NO. 24-5780 (Optional)

Ref. No.	Part No.	Description	No. Used
1	325-8	Capscrew	2
2	3253-7	Lockwasher	6
3	24-5790	Rear Weight	2
4	3-8847	Spacer	2

Ref. No.	Part No.	Description	No. Used
5	3217-9	Nut	6
6	325-14	Capscrew	4
7	3256-26	Flatwasher	8

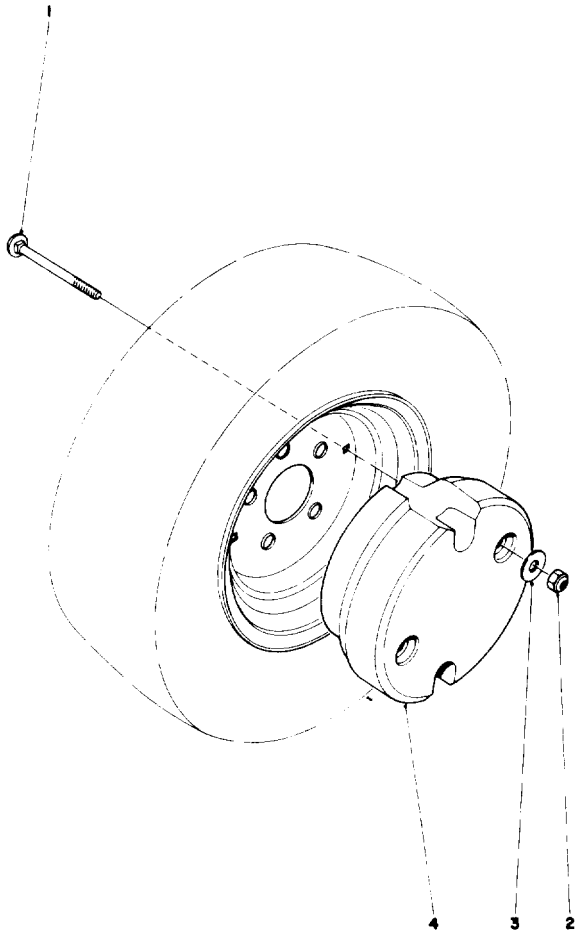

WHEEL WEIGHT KIT NO. 30762 (Optional)

Ref. No.	Part No.	Description	No. Used
1	3231-24	Carriage Bolt	4
2	3296-26	Nut	4
3	3256-24	Washer	4
4†		Wheel Weight	2

†Order Replacement Kit Model No. 30762

ENGINE, ONAN MODEL NO. B48G - GA020 TYPE NO. 4051C
CYLINDER BLOCK AND OIL SYSTEM

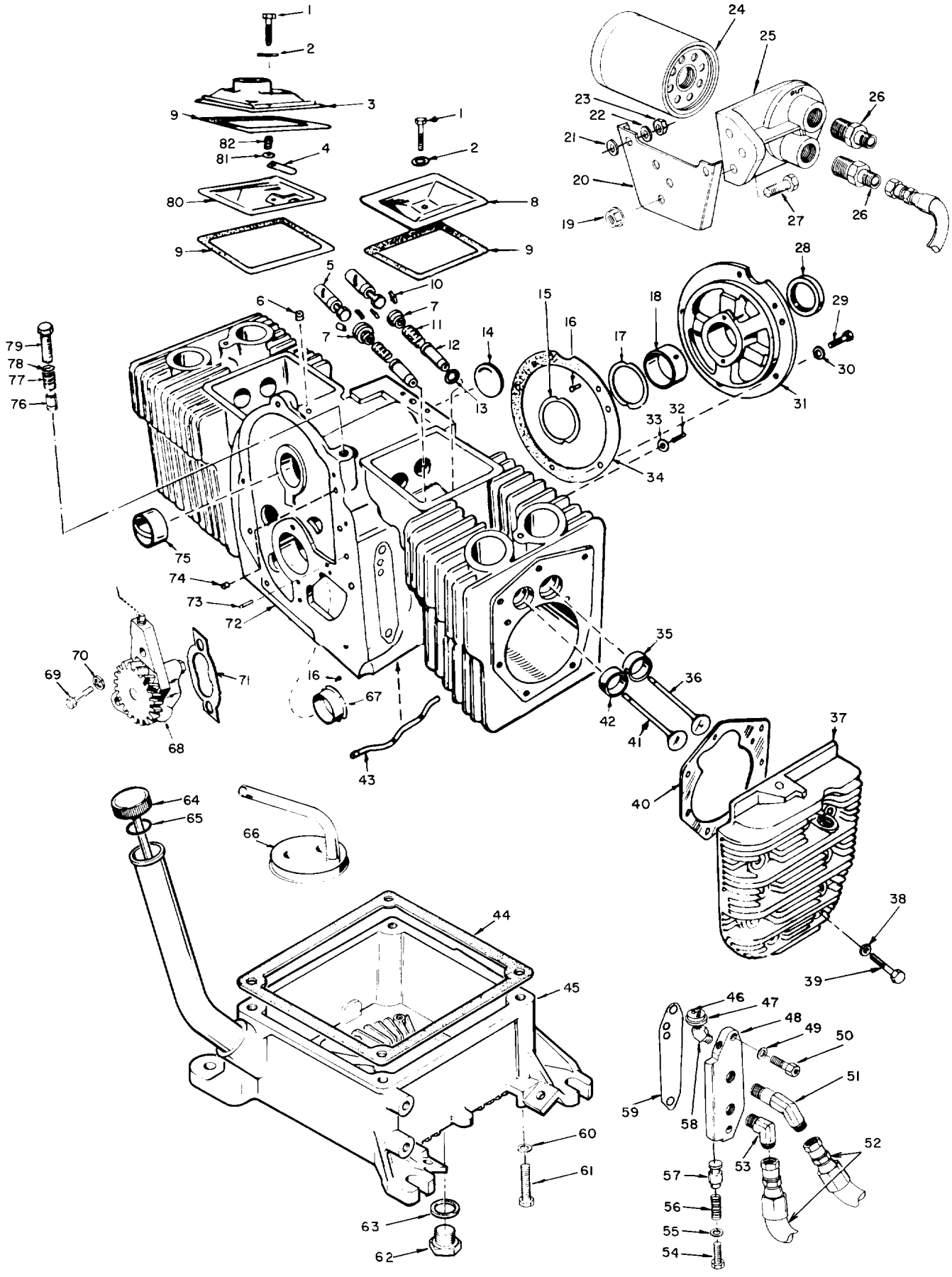

ENGINE, ONAN MODEL NO. B48G - GA020 TYPE NO. 4051C
CYLINDER BLOCK AND OIL SYSTEM

Ref. No.	Part No.	Description	No. Used
1	800-0010	Screw – Cap Hex Hd.	2
2	526-0063	Washer, Flat – Copper	2
3	110-2274	Cover – Valve	1
4	123-1175	Reed – Breather Valve	1
5	115-0006	Tappet, Valve (Standard)	4
*	115-0006-02	Tappet, Valve (.002 Oversize)	4
*	115-0006-05	Tappet, Valve (.005 Oversize)	4
6	517-0120	Plug, Breather Hole	1
7	110-0904	Roto Cap – Valve	4
8	110-1879	Cover, Valve	1
9	110-1921	Gasket, Valve Cover	3
10	110-0639	Lock, Valve Spring	8
11	110-0539	Spring Valve	4
12	110-1807	Guide, Valve	4
13	110-0068	Gasket, Intake Valve Guide	2
14	517-0048	Plug, Welch – Camshaft Opening	1
15	104-0575	Washer, Thrust	1
16	516-0072	Pin, Drive – Bearing Stop	4
17	104-0776	Shim, Crankshaft End Play (.005)	A/R
18	101-0450	Bearing, Crankshaft Rear Standard (Incl. Ref. #15)	1
*	101-0450-02	Bearing, Crankshaft Rear .002 Undersize (Incl. Ref. #15)	1
*	101-0450-10	Bearing, Crankshaft Rear .010 Undersize (Incl. Ref. #15)	1
*	101-0450-20	Bearing, Crankshaft Rear .020 Undersize (Incl. Ref. #15)	1
*	101-0450-30	Bearing, Crankshaft Rear .030 Undersize (Incl. Ref. #15)	1
19	870-0257	Nut, Self-Lock	3
20	122-0559	Bracket, Remote Oil Filter	1
21	526-0174	Washer, Over Bracket	2
22	526-0030	Washer, Under Bracket	2
23	862-0003	Nut, Hex	2
24	122-0469	Filter Oil	1
25	122-0476	Base, Remote Oil Filter	1
26	502-0804	Connector, Male	2
27	800-0027	Screw, Cap Hex Head	3
28	509-0041	Seal, Oil – Crankshaft Rear	1
29	800-0051	Screw, Cap – Hex Hd.	5
30	850-0050	Washer, Lock – Spring	5
31	101-0439	Plate, Bearing – Rear	1
32	520-0820	Stud	2
33	526-0066	Washer, Flat Copper	2
34	101-0415	Gasket, Bearing Plate	1
35	110-0197	Insert, Valve Seat – Intake (Standard)	2
*	110-0197-02	Insert, Valve Seat – Intake (.002 Oversize)	2
*	110-0197-05	Insert, Valve Seat – Intake (.005 Oversize)	2
*	110-0197-10	Insert, Valve Seat – Intake (.010 Oversize)	2
*	110-0197-25	Insert, Valve Seat – Intake (.025 Oversize)	2
36	110-2368	Valve, Intake	2
37	110-3214	Head, Cylinder – Right Side	1
*	110-3213	Head, Cylinder – Left Side	1
38	526-0122	Washer, Flat	18
39	800-0540	Screw, Cap – Hex Head (Special) (5/16-18 x 1-5/8")	8
*	800-0541	Screw, Cap – Hex Head (Special) 5/16-18 x 2")	10

Ref. No.	Part No.	Description	No. Used
40	110-3181	Gasket, Cylinder Head	2
41	110-1955	Valve, Exhaust	2
42	110-1824	Insert, Valve Seat – Exhaust (Std.)	2
*	110-1824-02	Insert, Valve Seat – Exhaust (.002 Oversize)	2
*	110-1824-05	Insert, Valve Seat – Exhaust (.005 Oversize)	2
*	110-1824-10	Insert, Valve Seat – Exhaust (.010 Oversize)	2
*	110-1824-25	Insert, Valve Seat – Exhaust (.025 Oversize)	2
43	120-0735	Tube, Oil – Cylinder Block	1
44	102-0693	Gasket, Oil Base	1
45	102-0913	Base, Oil	1
46	336-8117	Lead, Low Oil Pressure Cut Off	1
47	309-0105	Switch, Low Oil Pressure Cut Off	1
48	122-0369	Adapter, Oil Filter	1
49	526-0065	Washer, Flat Copper	2
50	802-0057	Screw, Cap – Socket Head	2
51	502-0806	Elbow, Male (To Filter)	1
52	501-0440	Hose, Oil	2
53	502-0805	Elbow, Male (From Filter)	1
54	801-0046	Screw, Cap Hex Hd.	1
55	526-0066	Washer, Flat	1
56	120-0140	Spring, By-Pass	1
57	120-0398	Valve, By-Pass Plunger	1
58	502-0053	Elbow, Street 45°	1
59	122-0375	Gasket, Oil Filter Adapter	1
60	850-0050	Washer, Lock-Spring	4
61	800-0061	Screw, Cap – Hex Head	4
62	102-0938	Plug, Oil Drain	1
63	102-0743	Gasket, Oil Drain	1
64	123-1402	Cap and Indicator, Oil Fill	1
65	509-0142	O-Ring, Oil Fill Cap	1
66	120-0713	Cup, Intake – Oil Pump	1
67	101-0432	Bearing, Crankshaft – Front (Flanged) Standard	1
*	101-0432-02	Bearing, Crankshaft – Front (Flanged) .002 Undersize	1
*	101-0432-10	Bearing, Crankshaft – Front (Flanged) .010 Undersize	1
*	101-0432-20	Bearing, Crankshaft – Front (Flanged) .020 Undersize	1
*	101-0432-30	Bearing, Crankshaft – Front (Flanged) .030 Undersize	1
68	120-0491	Pump, Oil	1
69	800-0007	Screw, Cap – Hex Hd.	2
70	850-0040	Washer, Lock Spring	2
71	120-0161	Gasket Kit, Oil Pump	1
72	110-3029	Block Assy. (Incl. Ref. #6, 12-18, 29-31, 34-35, 42-43, 67, 73 & 75	1
73	516-0141	Pin, Gear Cover Alignment	2
74	517-0067	Plug, Core Hole	1
75	101-0405	Bearing, Camshaft	2
76	120-0398	Plunger, Bypass Valve	1
77	120-0140	Spring, Bypass Valve	1
78	526-0066	Washer, Flat – Copper	1
79	801-0049	Screw, Cap – Hex Head	1
80	123-1173	Baffle, Breather Valve	1
81	526-0018	Washer, Flat	1
82	123-1174	Spring, Breather Valve	1

*Not Illustrated

ENGINE, ONAN MODEL NO. B48G - GA020 TYPE NO. 4051C

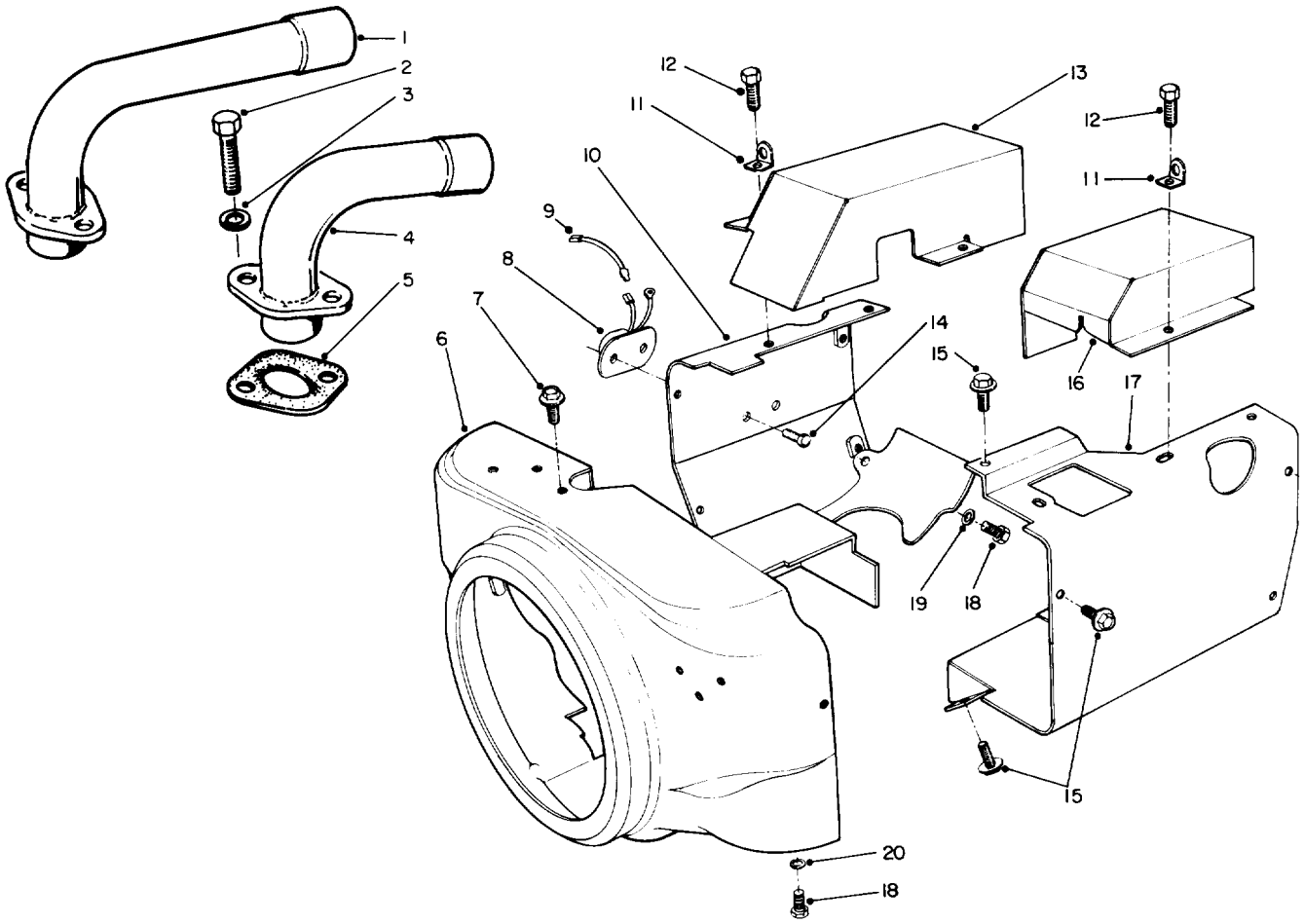

ENGINE AIR HOUSING

Ref. No.	Part No.	Description	No. Used
1	154-2129	Adapter, Exhaust – Left	1
2	800-0026	Screw, Cap – Hex Hd.	4
3	850-0045	Washer, Lock – Spring	4
4	154-2128	Adapter, Exhaust – Right	1
5	154-1725	Gasket, Exhaust	2
6	134-4197	Housing, Blower	1
7	815-0261	Screw, Cap – Hex. Hd.	1
8	309-0497	Switch, High Air Temp. Cut Off	1
9	3369501	Lead	1
10	134-3803	Housing, Cylinder Air – Left Side	1

Ref. No.	Part No.	Description	No. Used
11	403-1523	Bracket, Lifting	2
12	815-0508	Screw, Tapping – Hex Hd.	2
13	134-4028	Cover, Exhaust – Left	1
14	818-0076	Rivet, High Air Temp. Cut Off	2
15	821-0007	Screw, Cup Hex Washer Hd.	5
16	134-4029	Cover, Exhaust – Right	1
17	134-4201	Housing, Cylinder Air – Right Side	1
18	815-0290	Screw, Cap – Hex Hd.	4
19	526-0021	Washer, Flat	2
20	526-0018	Washer, Flat	2

ENGINE, ONAN MODEL NO. B48G - GA020 TYPE NO. 4051C

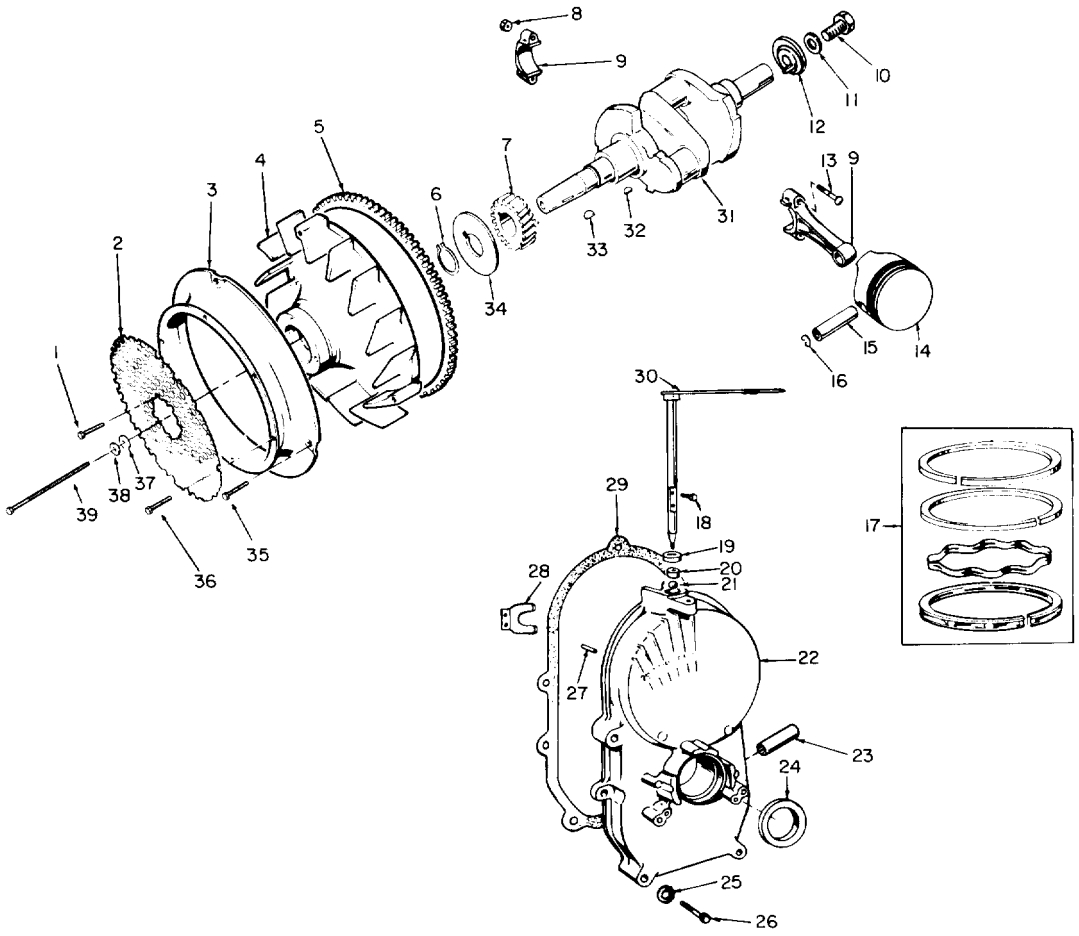

CRANKSHAFT AND FLYWHEEL

Ref. No.	Part No.	Description	No. Used
1	821-0014	Screw, Cap – Hex Head Locking	4
2	134-4120	Guard, Flywheel	1
3	134-3847	Venture, Blower Wheel	1
4	134-3912	Flywheel (Incl. Ref. #5)	1
5	104-0779	Gear, Ring	1
6	518-0014	Ring, Retaining	1
7	104-0032	Gear, Crankshaft	1
8	870-0302	Nut, Hex – Crown Lock	4
9	114-0257	Rod, Connecting – Standard (Incl. Ref. #8 & 13)	2
*	114-0257-10	Rod, Connecting (.010 Undersize) (Incl. Ref. #8 & 13)	2
*	114-0257-20	Rod, Connecting (.020 Undersize) (Incl. Ref. #8 & 13)	2
*	114-0257-30	Rod, Connecting (.030 Undersize) (Incl. Ref. #8 & 13)	2
10	801-0050	Screw, Cap Hex Hd.	1
11	850-0050	Washer, Lock-Spring	1
12	104-1156	Weight, Balance	1
13	114-0240	Bolt, Special – Connecting Rod	4
14	112-0186	Piston and Pin – Standard (Incl. Ref. #15 & 16)	2
*	112-0186-05	Piston and Pin (.005 Oversize) (Incl. Ref. #15 & 16)	2
*	112-0186-10	Piston and Pin (.010 Oversize) (Incl. Ref. #15 & 16)	2
*	112-0186-20	Piston and Pin (.020 Oversize) (Incl. Ref. #15 & 16)	2
*	112-0186-30	Piston and Pin (.030 Oversize) (Incl. Ref. #15 & 16)	2
*	112-0186-40	Piston and Pin (.040 Oversize) (Incl. Ref. #15 & 16)	2

Ref. No.	Part No.	Description	No. Used
15	112-0122	Pin, Piston	2
16	518-0311	Ring, Retaining	4
17	113-0189	Ring Set, Piston – Standard	2
*	113-0189-05	Ring Set, Piston (.005 Oversize)	2
*	113-0189-10	Ring Set, Piston (.010 Oversize)	2
*	113-0189-20	Ring Set, Piston (.020 Oversize)	2
*	113-0189-30	Ring Set, Piston (.030 Oversize)	2
*	113-0189-40	Ring Set, Piston (.040 Oversize)	2
18	815-0046	Screw, Machine – Pan Hd.	2
19	510-0014	Ball, Bearing – Governor Shaft	1
20	510-0105	Bearing, Governor Shaft	1
21	509-0008	Seal, Oil – Governor Shaft	1
22	103-0669	Gear Case Assembly (Incl. Ref. #18-21, 23-24, 27-28 & 30)	1
23	149-1299	Tube, Vacuum Port	1
24	509-0040	Seal, Oil – Crankshaft	1
25	526-0065	Washer, Flat – Copper	5
26	800-0032	Screw, Cap Hex Hd.	4
*	800-0545	Screw, Cap Hex Hd. Special	1
27	516-0130	Pin, Dowel – Governor Cup Stop	1
28	150-1187	Yoke, Governor Shaft	1
29	103-0408	Gasket, Gearcase Mounting	1
30	150-1470	Shaft and Arm, Governor	1
31	104-1419	Crankshaft	1
32	515-0001	Key, Crankshaft Gear	1
33	515-0227	Key, Flywheel	1
34	104-0043	Washer, Gear Retaining	1
35	821-0010	Screw, Cap Hex Washer Hd.	5
36	815-0518	Screw, Tapping Hex Washer Hd.	6
37	526-0017	Washer, Flat	1
38	850-0055	Washer, Lock – Spring	1
39	104-0170	Screw, Cap – Hex Head	1

*Not Illustrated

ENGINE, ONAN MODEL NO. B48G - GA020 TYPE NO. 4051C

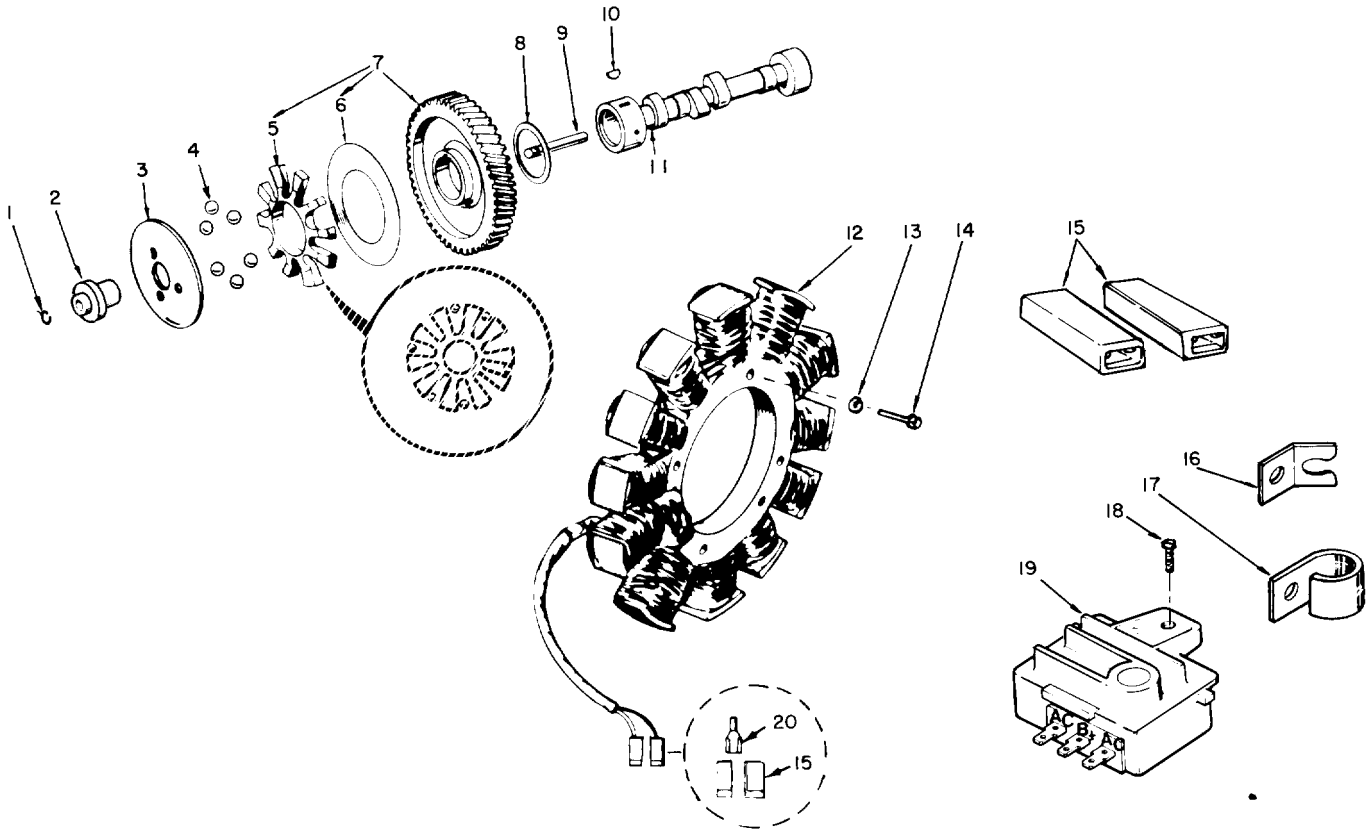

CAMSHAFT AND FLYWHEEL ALTERNATOR

Ref. No.	Part No.	Description	No. Used
1	150-0078	Ring, Retaining	1
2	150-1519	Hub, Governor Cup	1
3	150-1520	Cup, Governor	1
4	510-0015	Ball, Governor	6
5	150-1257	Spacer, Flyball	1
6	150-0077	Plate, Flyball	1
7	105-0332	Gear, Camshaft (Incl. Ref. #5 & 6)	1
8	105-0541	Washer, Thrust	1
9	150-0075	Pin, Center	1
10	515-0001	Key, Woodruff—Camshaft Gear	1

Ref. No.	Part No.	Description	No. Used
11	105-0402	Camshaft (Incl. Ref. #9)	1
12	191-1256	Stator (Incl. Ref. #15 & 20)	1
13	850-0030	Washer – Lock, Spring	3
14	813-0148	Screw – Machine, Round Hd.	3
15	323-1216	Body, Terminal Connector (AC Terminals)	2
16	167-0188	Bracket, Alternator Lead	1
17	332-2319	Clamp, Wire – Alternator Leads	1
18	821-0007	Screw – Cap Hex Washer Hd.	1
19	191-1206	Regulator Voltage	1
20	332-2423	Terminal, Stator Leads	2

ENGINE, ONAN MODEL NO. B48G - GA020 TYPE NO. 4051C

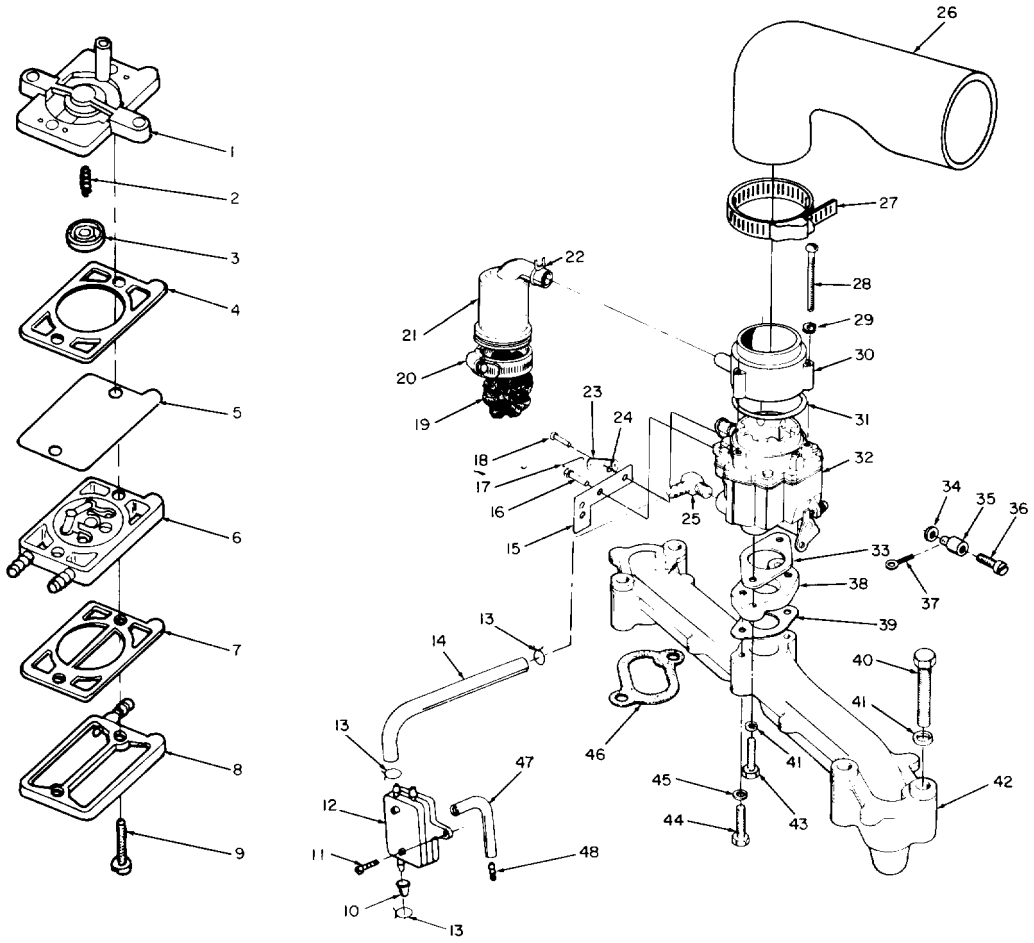

FUEL SYSTEM

Ref. No.	Part No.	Description	No. Used
1	149-1324	Base, Pump	1
2	142-0545	Spring, Fuel Pump	1
3	142-0552	Plate, Drive – Fuel Pump	1
4	142-0541	Gasket – Pump Cover	1
5	142-0555	Diaphragm – Fuel Pump	1
6	142-0537	Valve Assembly, Reed – Fuel Pump (Includes Cap & Clamp)	1
7	149-1323	Gasket – Cover to Valve Assy.	1
8	149-1326	Cover – Pump	1
9	142-0540	Screw – Pump Cover to Body	2
10	149-1321	Cap, Fuel Outlet	1
11	815-0555	Screw, Tapping Pan Hd.	2
12	149-1322	Pump, Fuel – Vacuum Pluse (Incl. Ref. #1-9)	1
13	503-0301	Clamp, Hose	3
14	503-0874	Hose, Fuel (13")	1
15	153-0524	Bracket, Cable Choke	1
16	821-0002	Screw, Cap Hex Washer Hd.	1
17	153-0500	Link, Choke	1
18	815-0480	Screw, Shoulder	1
19	123-1428	Filter, Breather Tube	1
20	503-01071	Clamp, Breather Tube	1
21	123-1539	Tube, Crankcase Breather	1
22	503-0171	Clamp, Hose	1
23	153-0523	Swivel, Choke	1
24	854-0010	Washer, Lock Internal Tooth	1

Ref. No.	Part No.	Description	No. Used
25	502-0313	Elbow – Hose	1
26	140-1428	Elbow, Air Inlet	1
27	503-0274	Clamp, Hose	1
28	813-0106	Screw – Machine Round Hd.	3
29	850-0030	Washer – Lock	3
30	140-1714	Adapter, Air Cleaner	1
31	509-0145	Seal, O-Ring	1
32	146-0294	Carburetor, Complete (Incl. Ref. #32)	1
33	154-0733	Gasket, Carburetor to Adapter	1
34	526-0140	Washer	1
35	152-0155	Swivel	1
36	815-0104	Screw	1
37	516-0059	Cotter Pin	1
38	154-1977	Adapter, Carburetor	1
39	145-0438	Gasket, Adapter to Manifold	1
40	800-0033	Screw, Cap – Hex Head	4
41	850-0045	Washer, Lock-Spring	6
42	154-2206	Manifold, Intake	1
43	800-0027	Screw, Cap – Hex Hd.	2
44	800-0023	Screw, Cap – Hex Hd.	2
45	850-0040	Washer, Lock – Spring	2
46	154-1744	Gasket, Manifold to Block	2
47	503-0663	Hose, Fuel Pump Vacuum	1
48†	149-1299	Tube, Vacuum Port	1

†Part included in 103-0669 Gear Case Assembly

ENGINE, ONAN MODEL NO. B48G - GA020 TYPE NO. 4051C

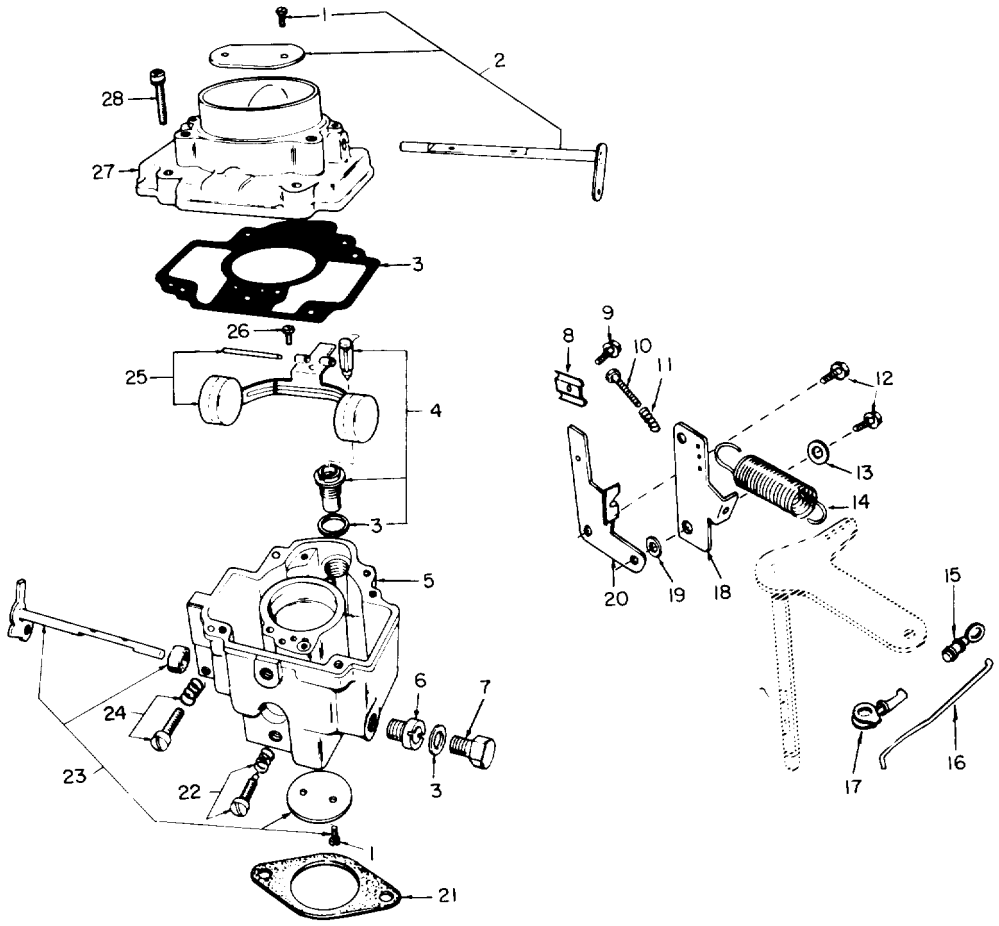

CARBURETOR AND GOVERNOR CONTROL—VARIABLE SPEED (Side Pull)

Ref. No.	Part No.	Description	No. Used
1	146-0142	Screw, Valve Mounting	4
2	146-0260	Choke Shaft Package	1
3	146-0220	Gasket Kit	1
4	146-0289	Valve and Seat Package	1
5†		Body	1
6	146-0316	Jet, Power	1
7	146-0278	Plug, Power Jet	1
8	153-0514	Clamp, Cable	1
9	815-0391	Screw, Tapping – Hex Head	1
10	815-0510	Screw, Tapping Hex Head	1
11	150-1398	Spring, Idle Setting	1
12	815-0436	Screw – Cap Hex Washer Hd.	2
13	526-0214	Washer, Flat	1
14	150-1214	Spring, Governor	1
15	518-0004	Clip, Retaining – Control Rod	1
16	150-1924	Rod, Governor Control	1

Ref. No.	Part No.	Description	No. Used
17	518-0406	Clip, Retaining – Control Rod	1
18	150-1576	Arm, Governor Control	1
19	150-1269	Bushing, Control Arm	1
20	150-1725	Bracket, Cable	1
21	154-0733	Gasket Carburetor Mounting	1
22	146-0209	Idle Needle Package	1
23	146-0259	Throttle Shaft Package	1
24	146-0261	Idle Speed Adjusting Screw Pkg.	1
25	146-0262	Float Package	1
26	146-0222	Screw, Lever Pin	1
27†		Intake, Air	1
28	146-0247	Screw, Body to Intake	4
*	146-0294	Carburetor, Complete (Incl. Ref. #21)	1
*	146-0283	Kit, Repair	1

*Not Illustrated †Not Sold Separately

ENGINE, ONAN MODEL NO. B48G - GA020 TYPE NO. 4051C

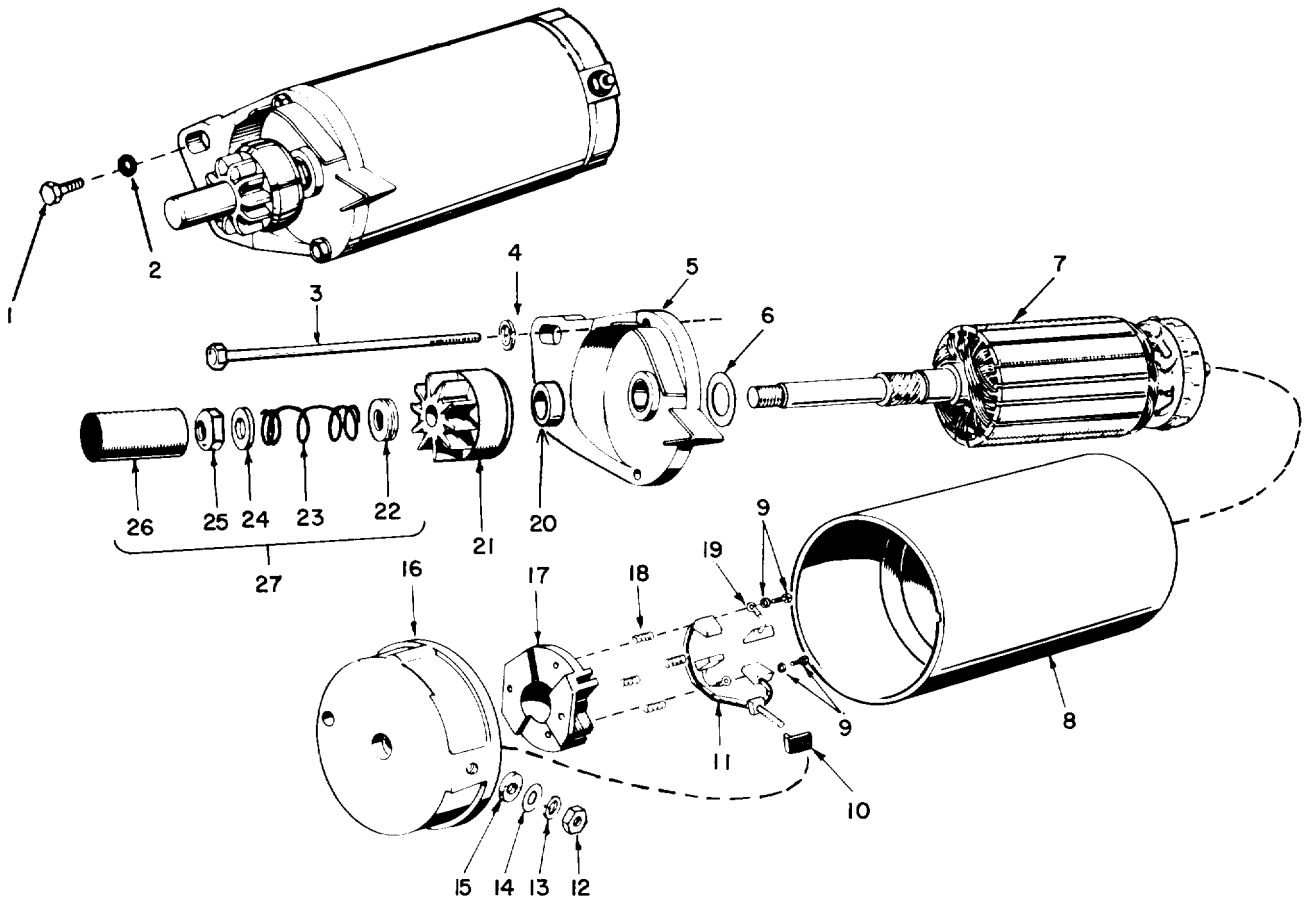

STARTER MOTOR

Ref. No.	Part No.	Description	No. Used
1	800-0552	Screw – Cap, Hex Hd.	2
2	526-0122	Washer, Flat	2
3	191-1048	Screw – Hex Hd.	2
4	850-0040	Washer, Lock	2
5	191-1287	Cap Assembly, Drive End	1
6	191-1038	Washer, Armature Thrust	1
7	191-1039	Armature	1
8†		Housing, Starter Motor	1
9†		Screw and Lockwasher	2
10†		Bushing Insulation – Input Stud	1
11†		Stud and Brush Assembly Input	1
12†		Nut, Securing – Input Stud	1
13†		Washer, Lock – Input Stud	1
14†		Washer, Flat – Input Stud	1
15†		Washer, Insulation – Input Stud	1
16	191-1040	Cap Assembly, Commatator (Incl. Ref. #10-15&17-19&21)	1
17†		Brush Holder	1
18†		Spring, Brush	4
19†		Brush, Ground	2
20	191-1534	Cap, Dust	1
21	191-1036	Drive Assembly	1
22†		Spacer, Dust Cover	1
23†		Spring, Anti-Drift	1
24†		Washer, Stop Nut	1
25†		Nut, Stop	1
26†		Cover, Dust	1
27	191-1359	Dust Cover Assembly (Incl. Ref. #22-26)	1
*	191-1041	Repair Kit, Brush, Spring and Stud (Incl. Ref. #11, 18-19)	1
*	191-1527	Motor Starter Complete	1

*Not Illustrated
†Not Sold Separately

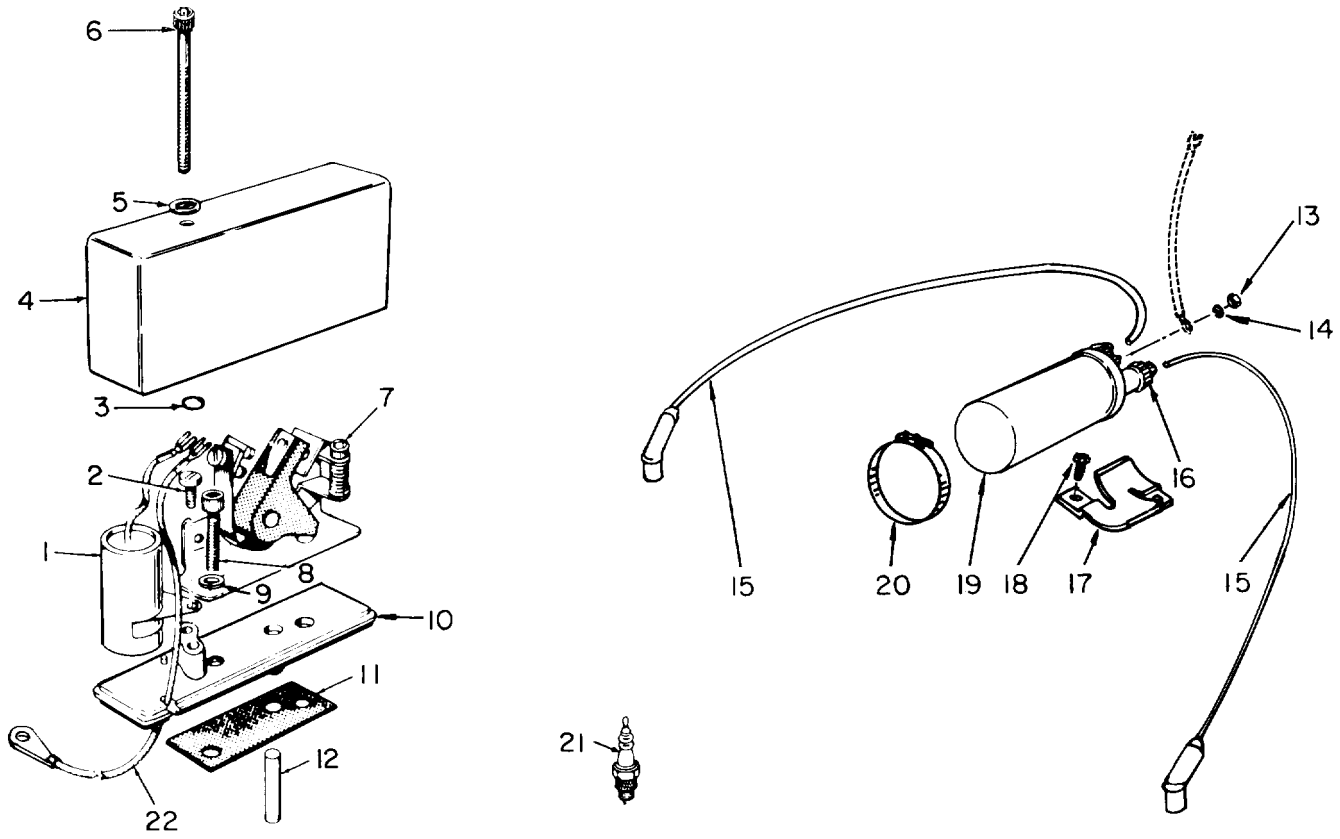

IGNITION SYSTEM

Ref. No.	Part No.	Description	No. Used
1	312-0244	Condenser	1
2	815-0358	Cap Screw Slotted	1
3	509-0065	Retainer ("O" Ring)	1
4	160-1285	Cover, Breaker Box	1
5	526-0008	Flat Washer	1
6	802-0022	Screw, Cap-Hex Socket	1
7	160-1183	Point Set Breaker	1
8	802-0034	Cap Screw Socket Hd.	2
9	850-0038	Lockwasher	2
10	160-1219	Base Breaker	1
11	160-1150	Gasket, Breaker Box	1
12	160-1151	Plunger, Breaker Points	1

Ref. No.	Part No.	Description	No. Used
13	166-0554	Nut – Hex, Special	1
14	850-2005	Washer, Lock – Spring	1
15	167-1595	Cable – Spark Plug 27" Right	1
*	167-1596	Cable – Spark Plug 9" Left	1
16	166-0604	Cap Coil Terminal	2
17	166-0721	Bracket Ignition Coil	1
18	821-0009	Screw, Cap Hex Washer Hd.	1
19	166-0535	Coil, Ignition	1
20	503-0365	Clamp, Ignition Coil	1
21	167-0291	Plug, Spark	2
22	336-8402	Lead – Breaker Box to Coil	1
*	160-1303	Breaker Box (Incl. Ref. #1-11)	1

*Not Illustrated