FORM NO. 3311-891

TORO

MODEL NO. 20698 — 2000001 & UP

PARTS CATALOG

18" H.P. REAR BAGGER

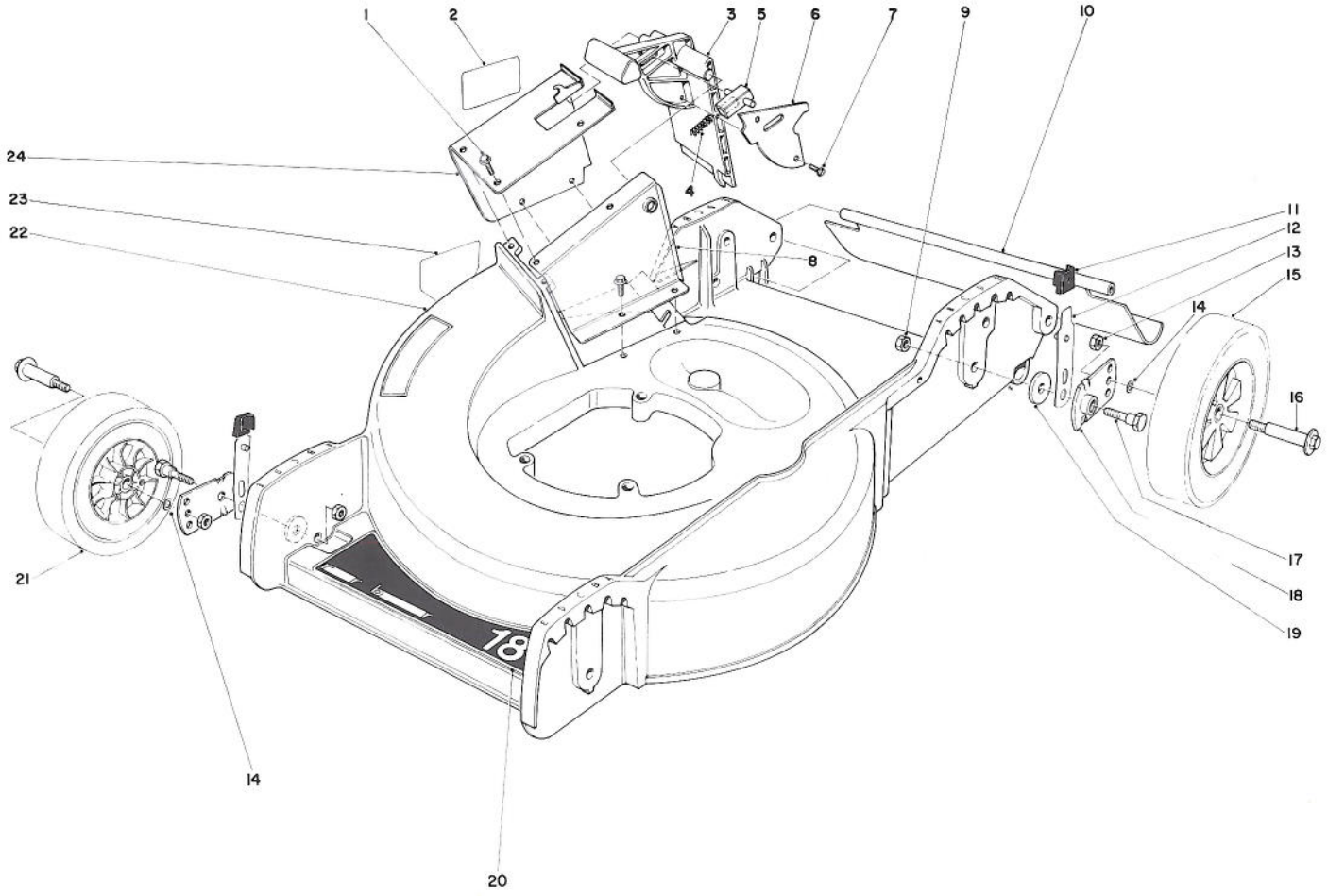

HOUSING ASSEMBLY

Ref. No.	Part No.	Description	No. Used
1	12-3270	Screw Special	7
2	46-2240	Danger Decal	1
3	33-0410	Door Mulching	1
4	33-0450	Latch Spring	1
5	33-0470	Door Latch	1
6	33-0440	Door Cover	1
7	32144-32	Screw	2
8	33-0430	Inner Tunnel	1
9	32146-5	Nut	4
10	33-2380	Rear Shield	1
11	25-7740	Arm Knob	4
12	25-7890	Spring Arm	4
13	32146-6	Nut	4

Ref. No.	Part No.	Description	No. Used
14	40-1940	Washer	4
15	27-6200	Wheel & Tire Assembly	2
16	27-6230	Wheel Bolt	4
17	25-3440	Pivot Screw	4
18	33-0400	Pivot Arm	4
19	33-0390	Pivot Washer	4
20	44-0470	Decal — Rear Bagger	1
21	27-6210	Wheel & Tire Assembly	2
22	8-3529	Housing (Incl. Ref. #23)	1
23	39-5770	Decal — Danger	1
24	11-2849	Tunnel — Outer (Incl. Ref. #2)	1
*	11-2039	Loose Parts	1

*Not Illustrated

COPYRIGHT © ALL RIGHTS RESERVED
The Toro Company — 1982
MINNEAPOLIS, MN 55420 — U.S.A.

PRICE $1.00

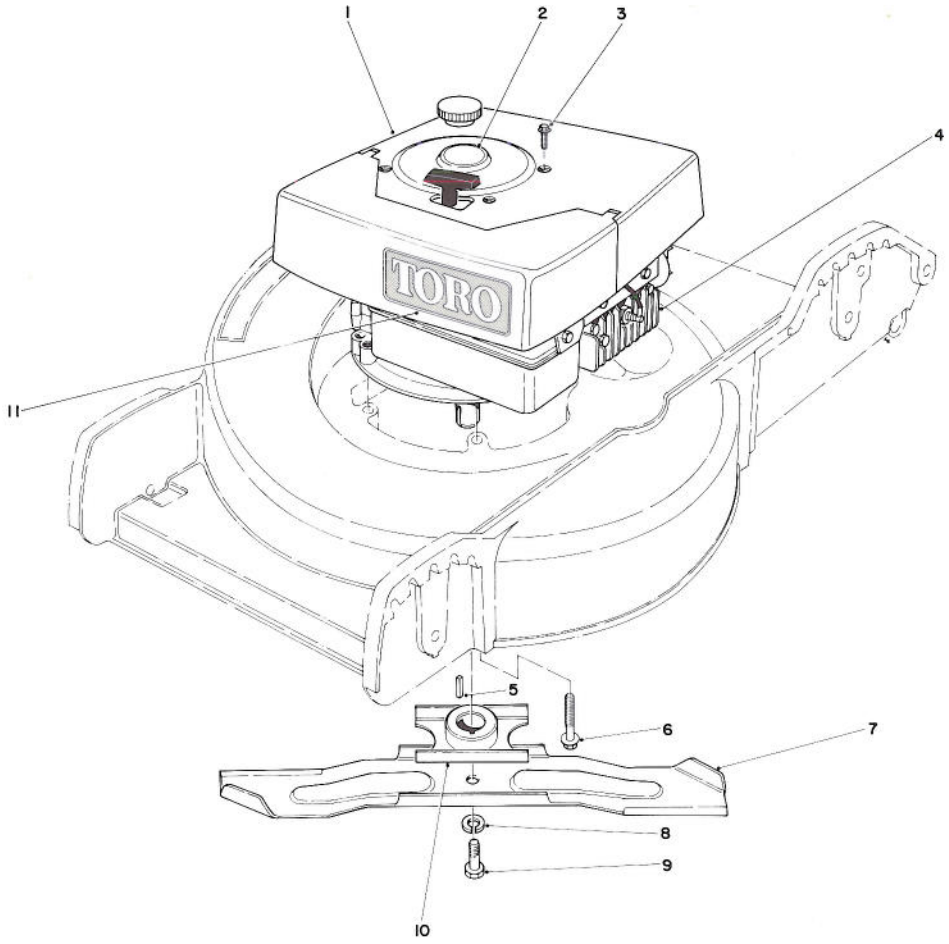

ENGINE ASSEMBLY

Ref. No.	Part No.	Description	No. Used
1	37-9830	Shroud Assembly	1
2	38-0790	Decal – 4 Cycle	1
3	32144-60	Self Tapping Screw	4
4	221-712	Engine	1
5	27-8590	Key Square	1
6	11-0581	Screw	3

Ref. No.	Part No.	Description	No. Used
7	33-0490	Blade	1
8	3253-22	Lockwasher	1
9	3-5246	Screw Special	1
10	20-2750	Blade Retainer	1
11	44-0510	Decal – Toro	1

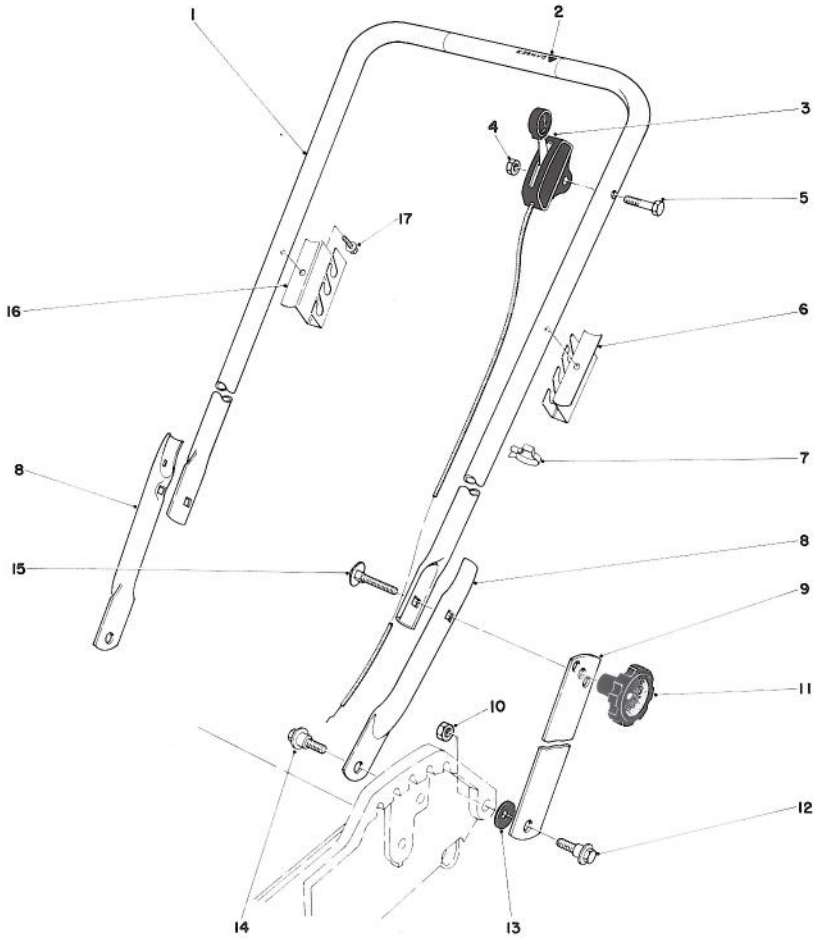

HANDLE ASSEMBLY

Ref. No.	Part No.	Description	No. Used
1	11-2859	Upper Handle (Incl. Ref. #2)	1
2	29-6290	Decal – Danger	1
3	33-2531	Throttle Control	1
4	32146-17	Locknut	1
5	321-10	Capscrew	1
6	36-0730	Support Bag L.H.	1
7	218-465	Clip	1
8	33-0520	Lower Handle	2
9	33-0530	Handle Latch	2

Ref. No.	Part No.	Description	No. Used
10	32146-5	Locknut	2
11	19-4050	Handle Knob	2
12	27-7210	Shoulder Screw	2
13	27-6510	Spacer Handle Latch	2
14	5-2490	Shoulder Screw	2
15	17-9420	Handle Screw	2
16	36-0740	Bag Support R.H.	1
17	32104-76	Screw	2

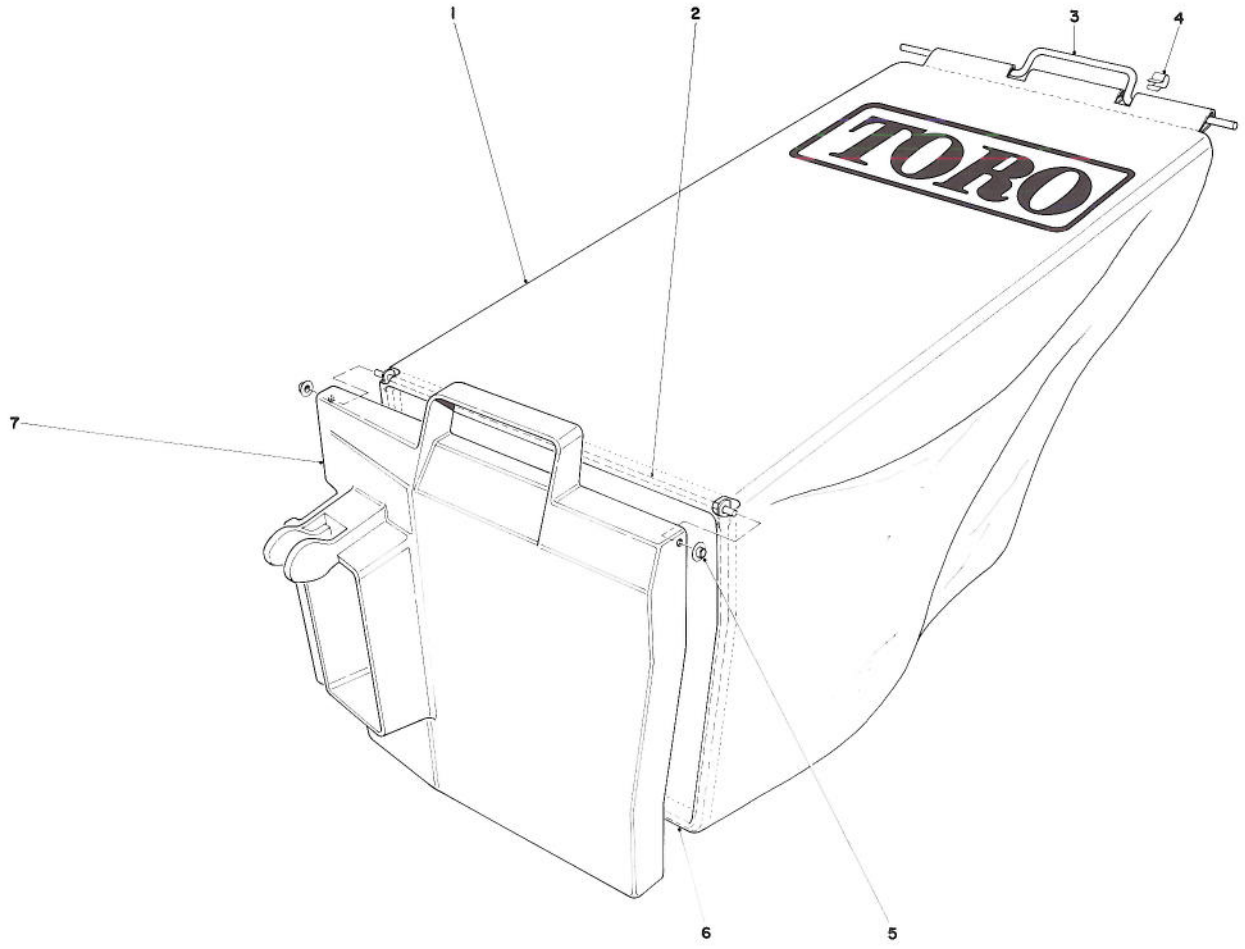

GRASS BAG ASSEMBLY NO. 8-0669

Ref. No.	Part No.	Description	No. Used
1	8-0659	Bag	1
2	33-2970	Hinge	1
3	33-2390	Handle Bag	1
4	3290-421	Clip Bag Handle	2

Ref. No.	Part No.	Description	No. Used
5	3290-422	Push Nut Washer Cap	2
6	33-2240	Frame Bag	1
7	33-2980	Door-Bag	1
*	8-0669	Grass Bag Assembly (Incl. Ref. #1-7)	1

*Not Illustrated

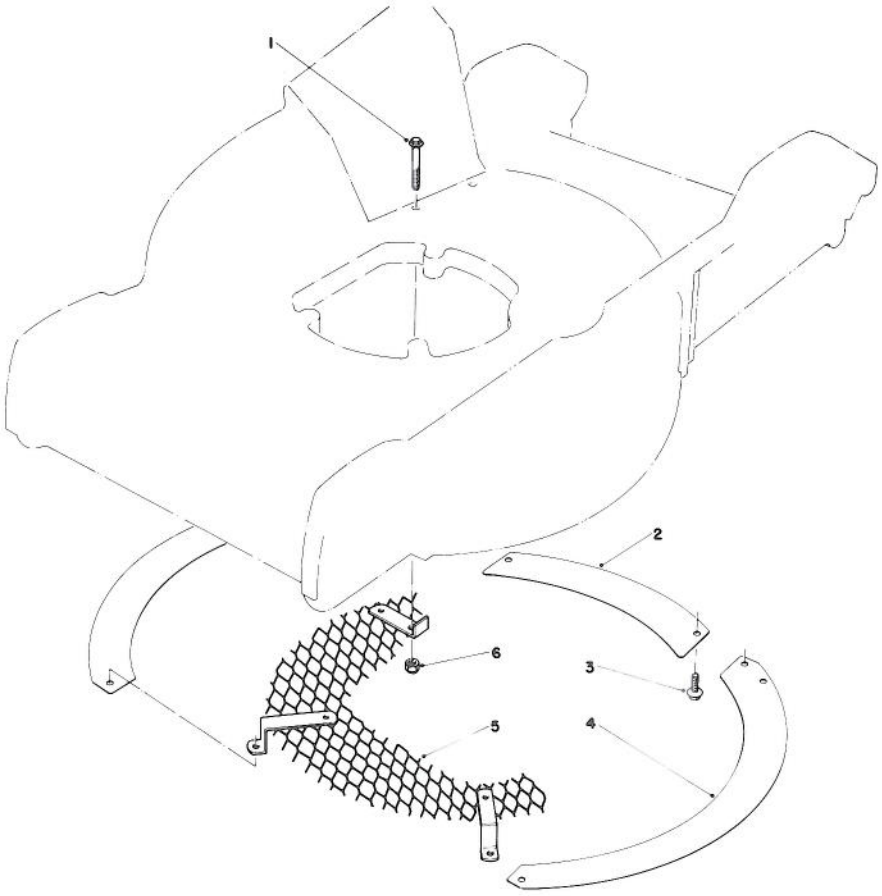

LEAF SHREDDER KIT NO. 59100 (Optional)

Ref. No.	Part No.	Description	No. Used
1	37-7470	Screw	1
2	37-7410	Rear Baffle	1
3	12-3270	Screw	4

Ref. No.	Part No.	Description	No. Used
4	37-7400	Outer Baffle	2
5	37-7450	Screen	1
6	32146-17	Locknut	1

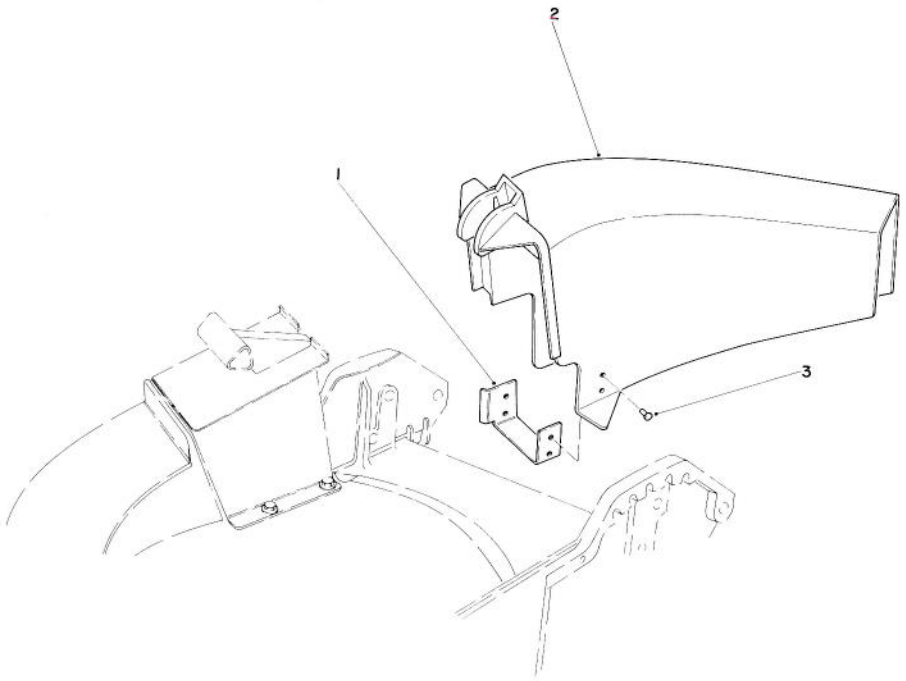

SIDE DISCHARGE KIT NO. 59107 (Optional)

Ref. No.	Part No.	Description	No. Used
1	44-2620	Chute Bracket	1
2	44-2610	Chute Discharge	1

Ref. No.	Part No.	Description	No. Used
3	3295-29	Rivet	4

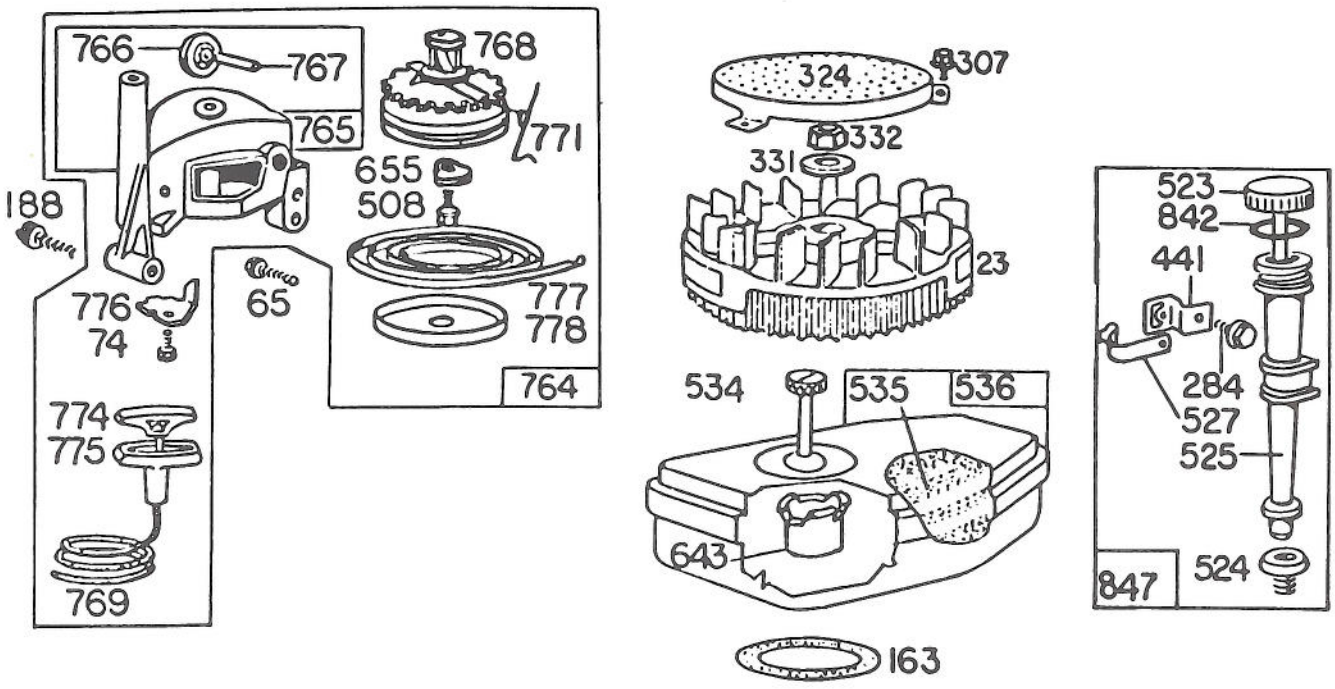

ENGINE BRIGGS & STRATTON MODEL NO. 93508-0196-01
ENGINE BRIGGS & STRATTON MODEL NO. 92908-2054-01

Ref. No.	Part No.	Description	No. Used
23	394032	Flywheel – Magneto	1
65	93587	Screw – Vertical Pull Starter Mounting	1
74	93490	Screw	1
163	271139	Gasket – Air Cleaner Mtg.	1
188	93585	Screw – Fuel Tank and Starter Mounting	1
284	93572	Screw – Clamp Mtg.	1
307	93490	Screw – Cylinder Shield and Rotating Screen Mounting	1
324	223006	Screen – Rotating	1
331	220865	Washer – Flywheel	1
332	92284	Nut – Flywheel	1
441	222530	Bracket – Oil Fill Tube	1
508	93158	Screw	1
523	391838	Cap with Dipstick – Oil Filter	1
524	68838	Seal – Filler Tube	1
525	280131	Tube – Oil Filler	1
527	222548	Clamp – Oil Filler Tube	1
534	93865	Screw – Air Cleaner	1
535	270579	Element – Air Cleaner	1

Ref. No.	Part No.	Description	No. Used
536	390055	Cleaner Assembly – Air	1
643	222991	Cup – Air Cleaner	1
655	222057	Anchor – Spring	1
764	391486	Starter Assembly – Vertical Pull	1
765	299947	Housing – Vertical Pull Starter	1
766	280022	Pulley – Rope (Small)	1
767	231048	Pin – Small Rope Pulley (7/16" Long)	1
768	299948	Pulley and Gear Assy.	1
769	66734	Rope – Vertical Pull Starter	1
771	299961	Clip – Vertical Pull Starter	1
774	280121	Insert – Starter Handle	1
775	280036	Grip – Starter Rope	1
776	222049	Guide – Rope	1
777	390066	Spring – Vertical Pull Starter	1
778	280021	Cover – Vertical Pull Starter Cover	1
842	270920	Seal – Oil Filler Cap	1
847	392055	Fill Group – Oil	1

ENGINE BRIGGS & STRATTON MODEL NO. 93508-0196-01
ENGINE BRIGGS & STRATTON MODEL NO. 92908-2054-01

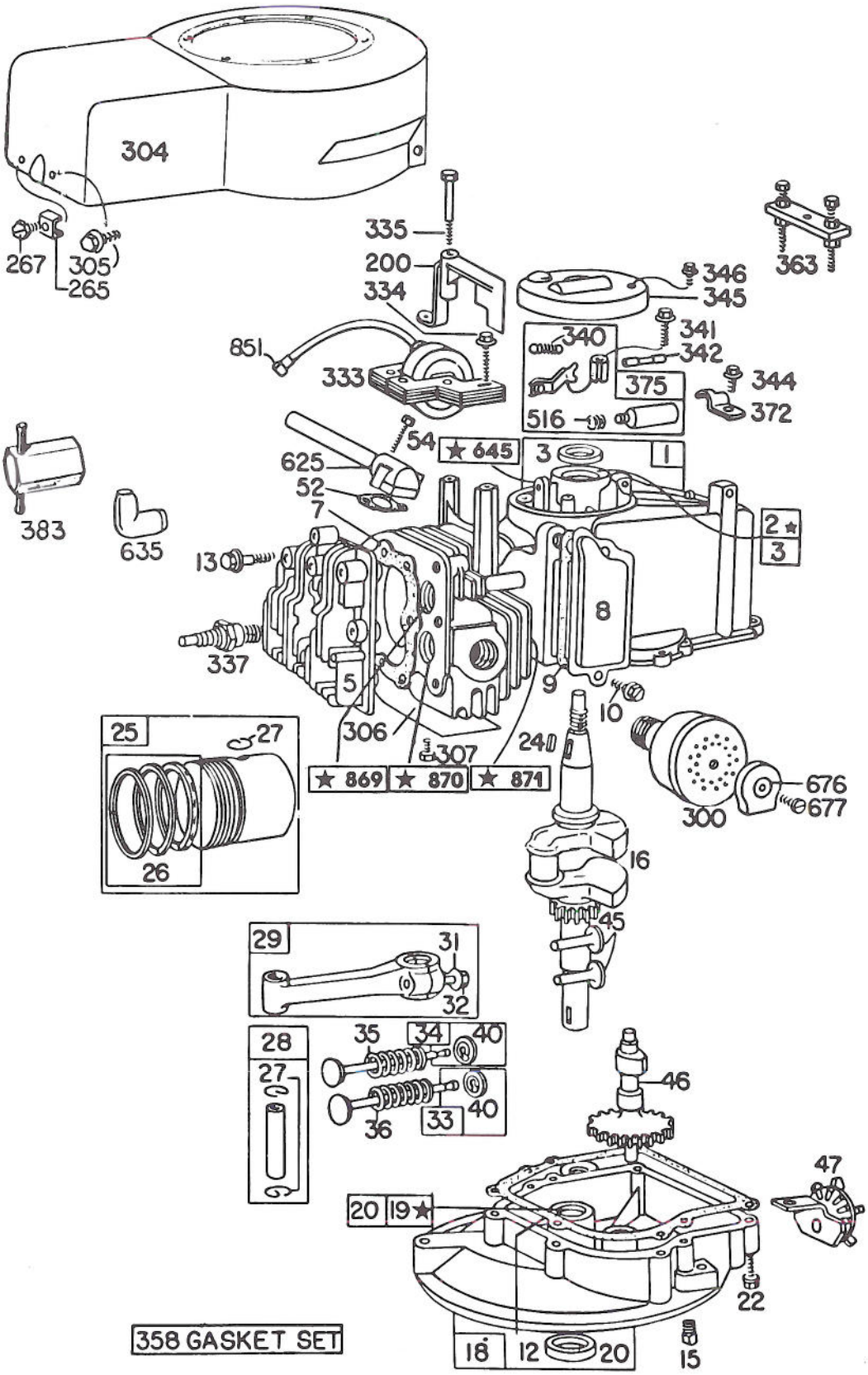

★NOTE-SPECIAL TOOLS REQUIRED FOR INSTALLING
SEE REPAIR INSTRUCTION MANUAL

ENGINE BRIGGS & STRATTON MODEL NO. 93508-0196-01
ENGINE BRIGGS & STRATTON MODEL NO. 92908-2054-01

Ref. No.	Part No.	Description	No. Used
1	298988	Cylinder Assembly	1
2	293708	Bushing – Cylinder	1
		Note: Requires special tools for installation	
3	299819	Seal – Oil	1
5	211479	Head – Cylinder	1
7	*270341	Gasket – Cylinder Head	1
8	298383	Breather – Valve Chamber	1
9	*270239	Gasket – Valve Cover	1
10	93394	Screw – Breather	1
12	*270833	Gasket – Crankcase – .015" Thick (Standard)	1
	*270895	Gasket – Crankcase – .005" Thick	1
	*270896	Gasket – Crankcase – .009" Thick	1
13	93111	Screw – Cylinder Head (1-15/16" Long)	1
15	91084	Plug – Oil Drain (Square Hd.)	1
16	261293	Crankshaft	1
18	390810	Sump – Oil	1
19	293709	Bushing – Oil Sump	1
		Note: Requires Special Tool for Installation	
20	391483	Seal – Oil	1
22	93032	Screw – Sump Mtg.	1
24	61760	Key – Flywheel	1
25	298904	Piston Assy. – Standard	1
	298905	Piston Assy. – .010" O.S.	1
	298906	Piston Assy. – .020" O.S.	1
	298907	Piston Assy. – .030" O.S.	1
		PISTON RING SETS:	
		Note: For Chrome Piston Ring Set – Standard Size – Order Part No. 299742.	
26	298982	Ring Set – Standard Piston	1
	298983	Ring Set – .010" O.S. Piston	1
	298984	Ring Set – .020" O.S. Piston	1
	298985	Ring Set – .030" O.S. Piston	1
27	26026	Lock – Piston Pin	1
28	298909	Pin Assembly Piston – Standard	1
	298908	Pin Assembly – Piston – .005" O.S.	1
29	294201	Rod Assy. – Connecting	1
		Note: For Connecting Rod with .020" Undersize Crankpin Bore – Order No. 296079.	
31	220756	Lock – Conn. Rod Screw	1
32	92296	Screw – Connecting Rod	1
33	296676	Valve – Exhaust	1
34	296677	Valve – Intake	1

*Included in Gasket Set – Part No. 298989.

Ref. No.	Part No.	Description	No. Used
35	260552	Spring – Intake Valve	1
36	26478	Spring – Exhaust Valve	1
40	93312	Retainer – Valve Spring	1
45	230173	Tappet – Valve	1
46	210453	Gear – Cam	1
47	294652	Oil Slinger Gear and Bracket	1
52	*270345	Gasket – Intake Elbow	1
54	93485	Screw – Intake Elbow Mtg.	1
200	68388	Blade – Governor	1
265	22372	Clamp – Casing	1
267	93469	Screw – Clamp Mounting	1
300	394569	Muffler – Exhaust	1
304	390279	Housing – Blower	1
305	93559	Screw – Blower Housing Mtg.	1
306	221805	Shield – Cylinder	1
307	93490	Screw – Cylinder Shield and Rotating Screen Mtg.	1
333	298502	Armature – Magneto	1
334	93381	Screw – Armature Mounting	1
335	93435	Screw – Armature and Governor Blade Mounting	1
337	293918	Plug – Spark 1½" High – (37 MM) (Resistor Type)	1
340	26018	Spring – Breaker Arm	1
341	93381	Screw – Breaker Arm Mtg.	1
342	65704	Plunger – Breaker Point	1
344	93042	Screw – Condenser Clamp Mounting	1
345	220366	Cover – Breaker Point and Condenser	1
346	93705	Screw – Dust Cover Mounting	1
358	298989	Gasket Set	1
363	19069	Puller – Flywheel (Optional Accessory)	1
372	220477	Clamp – Condenser	1
375	294628	Breaker Points and Condenser Set	1
		Note: 299061 Ignition Kit Includes: 294628 Point Set 65704 Plunger 61760 Key – Flywheel	
383	89838	Wrench – Spark Plug	1
516	260374	Spring – Connector (Condenser Post)	1
625	298775	Tube – Fuel Intake	1
635	66538	Elbow – Spark Plug	1
645	23513	Bushing – Plunger	1
676	393760	Deflector – Exhaust	1
677	93705	Screw – Muffler Deflector	1
851	221798	Terminal – Ignition Cable	1
869	210879	Seat – Intake Valve (Standard)	1
870	211291	Seat – Exhaust Valve (Standard)	1
871	63709	Guide – Exhaust Valve	1

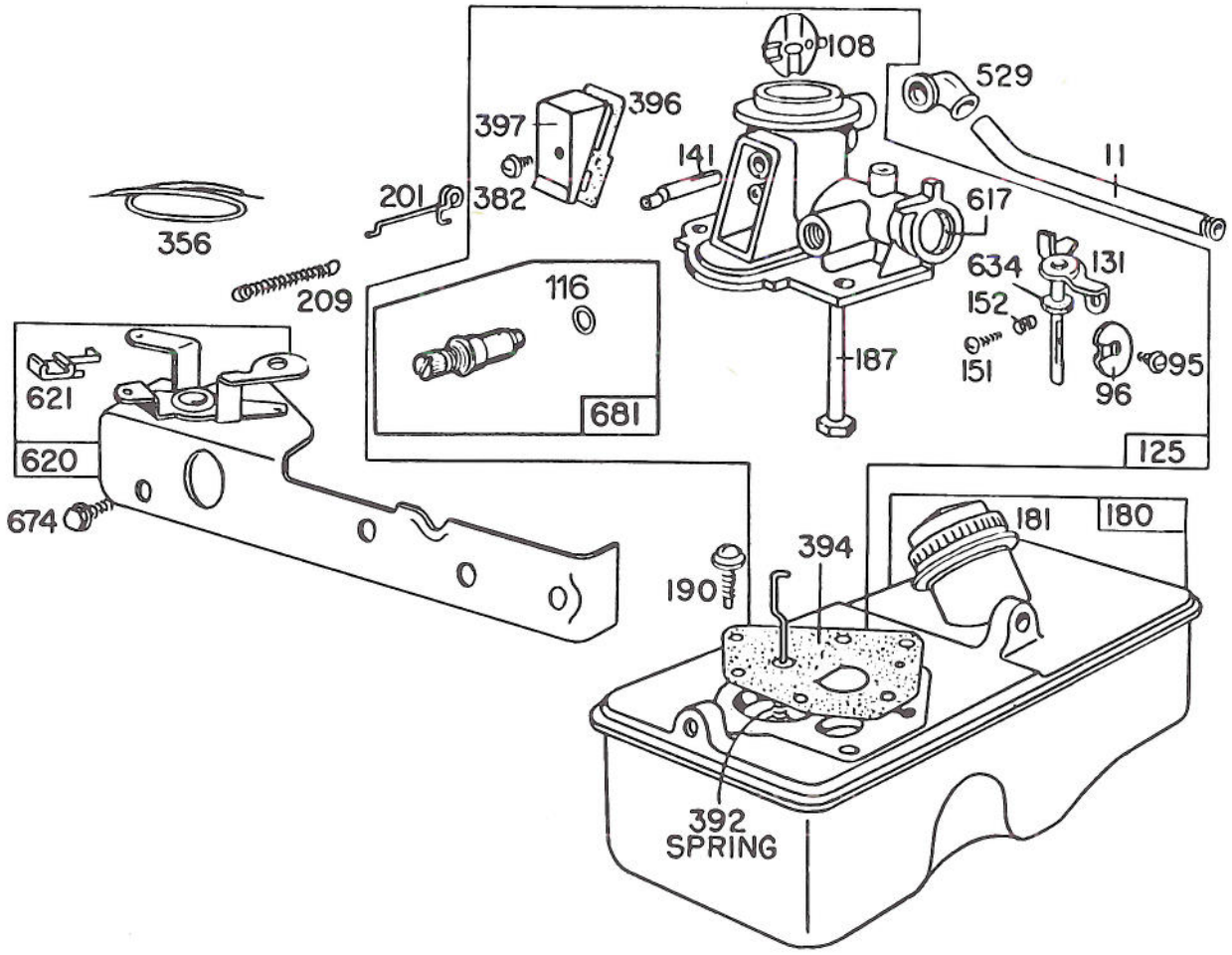

ENGINE BRIGGS & STRATTON MODEL NO. 93508-0196-01

Ref. No.	Part No.	Description	No. Used
11	230802	Tube – Breather	1
95	93499	Screw – Throttle Valve Mounting	1
96	211203	Valve – Throttle	1
108	280178	Valve – Choke	1
116	280203	Seal – O-Ring	1
125	394591	Carburetor Assembly	1
131	394588	Shaft and Lever Throttle	1
141	68908	Shaft – Choke	1
151	93524	Screw – Machine, Rd. Hd.	1
152	260746	Spring – Throttle Adj.	1
180	393113	Tank Assembly – Fuel	1
181	298425	Cap – Fuel Tank	1
187	393001	Pipe – Fuel	1
190	93440	Screw – Fuel Tank Mounting	1

Ref. No.	Part No.	Description	No. Used
201	261027	Link – Governor	1
209	261105	Spring – Governor	1
356	298479	Wire – Ground	1
382	93864	Screw – Choke Link Cover	1
392	261016	Spring – Diaphragm	1
394	299637	Diaphragm – Carburetor	1
396	270571	Gasket – Choke Link Cover	1
397	211678	Cover – Choke Link	1
529	67838	Grommet – Breather	1
617	270344	Seal – Intake Tube	1
620	299974	Plate – Carburetor Control	1
621	297472	Switch – Stop	1
634	270167	Washer – Throttle Shaft (Felt)	1
674	93158	Screw – Tank to Bracket	1
681	393451	Needle Valve Kit	1

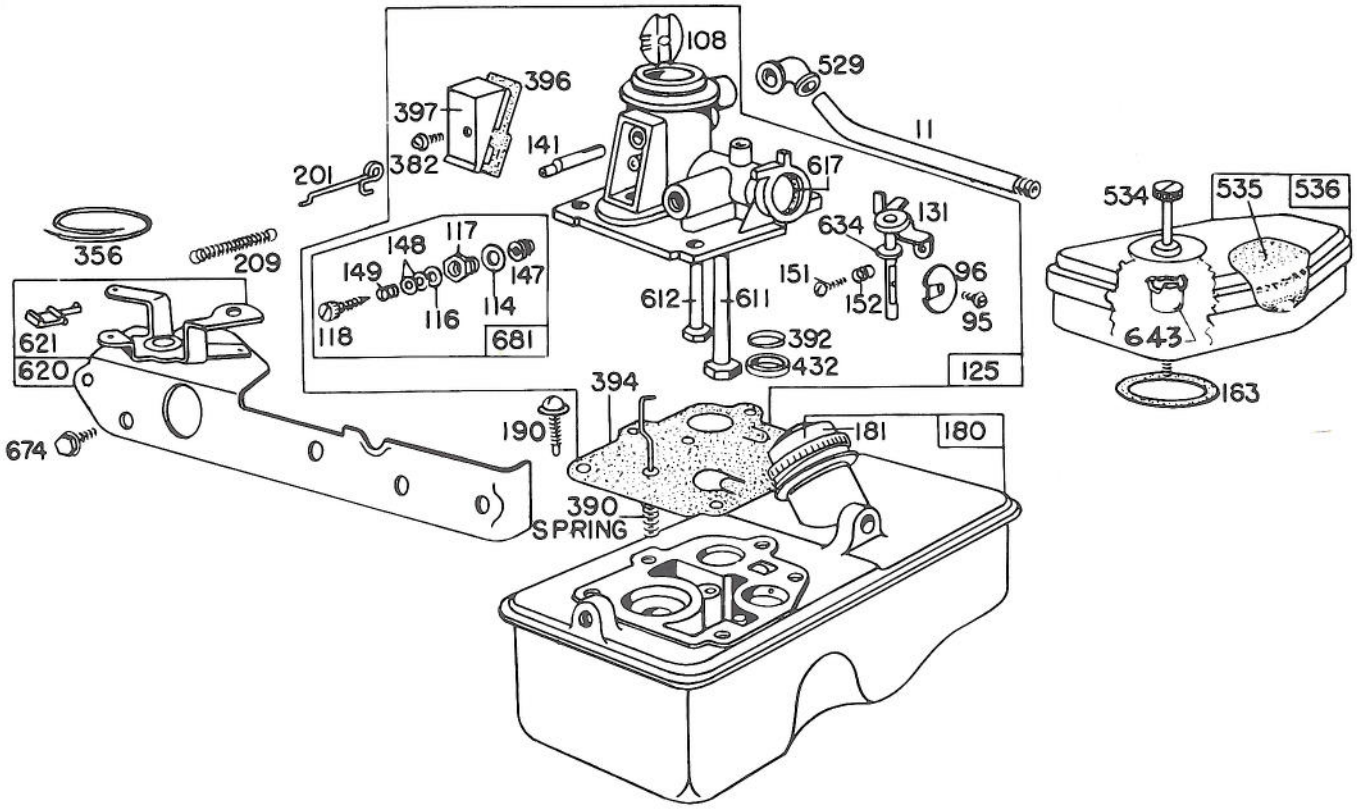

CARBURETOR ASSEMBLY BRIGGS & STRATTON MODEL NO. 92908-2054-01

Ref. No.	Part No.	Description	No. Used
11	230802	Tube – Breather	1
95	93499	Screw – Throttle Valve Mounting	1
96	211237	Valve – Throttle	1
108	298819	Valve – Choke	1
114	66594	Gasket – Needle Valve Nut	1
116	65978	Packing – Needle Valve	1
117	230590	Nut – Needle Valve	1
118	23433	Valve – Needle	1
125	390065	Carburetor Assembly	1
131	299977	Shaft and Lever – Throttle	1
141	68908	Shaft – Choke	1
147	230591	Seat – Needle Valve	1
148	22235	Washer – Needle Valve	2
149	26336	Spring – Needle Valve	1
151	93524	Screw – Rd. Hd.	1
152	260746	Spring – Throttle Adj.	1
163	270816	Gasket – Air Cleaner Mtg.	1
180	391694	Tank Assembly – Fuel	1
181	298425	Cap – Fuel Tank	1
190	93440	Screw – Fuel Tank Mtg.	1
201	261027	Link – Governor	1
209	261105	Spring – Governor	1

Ref. No.	Part No.	Description	No. Used
356	298479	Wire – Ground	1
382	93545	Screw – Choke Link Cover	1
390	261015	Spring – Diaphragm	1
392	260455	Spring – Fuel Pump Diaphragm	1
394	391681	Diaphragm – Carburetor	1
396	270571	Gasket – Choke Link Cover	1
397	211678	Cover – Choke Link	1
432	221377	Cap – Spring	1
529	67838	Grommet Breather	1
534	93374	Screw – Air Cleaner	1
535	270579	Element – Air Cleaner	1
536	390055	Cleaner Assembly – Air	1
611	297219	Pipe – Fuel (long)	1
612	296811	Pipe – Fuel (short)	1
617	270344	Seal – Fuel Intake Tube	1
620	299974	Plate – Carburetor Control	1
621	297472	Switch – Stop	1
634	270167	Washer – Throttle Shaft (Felt)	1
643	221321	Cup – Air Cleaner	1
674	93447	Screw – Tank to Bracket	1
681	299060	Needle Valve Kit	1

IDENTIFICATION AND ORDERING

MODEL AND SERIAL NUMBERS

The Mower has two identification numbers: a model number and a serial number. The two numbers are stamped on a decal which is located on the mower housing between the rear wheels. In any correspondence concerning the mower, supply model and serial numbers to assure that correct information and replacement parts are obtained.

To order replacement parts from an Authorized TORO Service Dealer, supply the following information:

1. Model and serial numbers of the mower.
2. Part number, description, and quantity of part(s) desired.

Note: Do not order by reference number if a parts catalog is being used; use the PART NUMBER.

The Toro Promise

A ONE YEAR LIMITED WARRANTY

The Toro Company promises to repair your TORO Product if defective in materials or workmanship. The following time periods from the date of purchase apply:

Residential Product . . . . . 1 Year
Residential Products Used Commercially . . . 45 Days

The costs of parts and labor are included, but the customer pays the transportation costs. Just return any residential product to an Authorized TORO Service Dealer or TORO Distributor.

Should you feel your TORO Product is defective and wish to rely on The Toro Promise, the following procedure is recommended:

1. Contact any Authorized TORO Service Dealer, TORO Master Service Dealer, or TORO Distributor (the Yellow Pages of your telephone directory is a good reference source).
2. He will either instruct you to return the product to him or recommend another Authorized TORO Service outlet which might be more convenient.
3. Bring the product along with your original sales slip, or other evidence of purchase date, to the service dealer.
4. The servicing dealer will inspect the unit, advise you whether the product is defective and, if so, make all repairs necessary to correct the defect without extra charge to you.

If for any reason you are dissatisfied with the dealer's analysis of the defect or the service performed, you may contact us.

Write:

TORO Consumer Service Department
8111 Lyndale Avenue South
Minneapolis, Minnesota 55420

The above remedy of product defects through repair by an Authorized TORO Service Dealer is the purchaser's sole remedy for any defect.

THERE IS NO OTHER EXPRESS WARRANTY. ALL IMPLIED WARRANTIES OF MERCHANTABILITY AND FITNESS FOR USE ARE LIMITED TO THE DURATION OF THE EXPRESS WARRANTY.

Some states do not allow limitations on how long an implied warranty lasts, so the above limitation may not apply to you.

This warranty applies only to parts or components which are defective and does not cover repairs necessary due to normal wear, misuse, accidents, or lack of proper maintenance. Regular, routine maintenance of the unit to keep it in proper operating condition is the responsibility of the owner.

All warranty repairs reimbursable under The Toro Promise must be performed by an Authorized TORO Service Dealer using Toro approved replacement parts.

Repairs or attemped repairs by anyone other than an Authorized TORO Service Account are not reimbursable under The Toro Promise. In addition, these unauthorized repair attempts may result in additional malfunctions, the correction of which is not covered by warranty.

THE TORO COMPANY IS NOT LIABLE FOR INDIRECT, INCIDENTAL OR CONSEQUENTIAL DAMAGES IN CONNECTION WITH THE USE OF THE PRODUCT INCLUDING ANY COST OR EXPENSE OF PROVIDING SUBSTITUTE EQUIPMENT OR SERVICE DURING PERIODS OF MALFUNCTION OR NON-USE.

Some states do not allow the exclusion or limitation of incidental or consequential damages, so the above limitation or exclusion may not apply to you.

This warranty gives you specific legal rights, and you may also have other rights which vary from state to state.

COUNTRIES OTHER THAN THE UNITED STATES OR CANADA

Customers who have purchased TORO products exported from the United States or Canada should contact their TORO Distributor (Dealer) to obtain guarantee policies for your country, province or state. If for any reason you are dissatisfied with your Distributor's service or have difficulty obtaining guarantee information, contact the TORO importer. If all other remedies fail, you may contact us at The Toro Company.

Compliance with Radio Interference Regulations Certified.
Certifie Conforme au Reglement sur le Brouillage Radioelectrique.

Litho in U.S.A.