Form No. 3328-958

# Mid–Size Mower

## ProLine Hydro 15hp with 36in Side Discharge Mower

**Model No. 30527—230000001 and Up**

# Parts Catalog

### Ordering Replacement Parts

To order replacement parts, please supply: the part number, the quantity, and the description of each part desired.

### Understanding Reference Numbers

Each identified part in an illustration has a reference number. The reference number for a part also appears in the parts list, along with other information about the part.

This catalog uses two special reference number formats, one to indicate parts in a service assembly and another to indicate the quantity of a given part in an illustration.

#### Service Assembly Reference Numbers

Parts in service assemblies have reference numbers in the form **a:b.** The **a** represents the reference number of the entire service assembly and the **b** represents a sequential number unique to each part within the service assembly.

For example, a wheel assembly might be identified by reference number **6**, the tire by **6:1**, the valve by **6:2**, and the wheel by **6:3**. When you order the assembly identified by reference number 6, you receive all parts identified by reference numbers 6:1, 6:2, and 6:3. However, you may also order any part individually.

Reference numbers of this type appear in illustrations and in part lists.

#### Reference Numbers Indicating Quantity

In an illustration, if a reference number indicates more than one part, the reference number has the form **nX y.** The **n** represents the quantity of the part, the **X** is the multiplication symbol, and the **y** represents the reference number.

For example, in an illustration, the reference number **2X 37** means that two of the parts identified by reference number 37 are indicated.

© The TORO Company — 2002
All Rights Reserved

# Contents


| Description | Page |
|---|---|
| Engine and Fuel System Assembly | 3 |
| Transmission and Drive Pulley Assembly | 4 |
| Linkage Assembly | 5 |
| Wheel Drive Assembly | 6 |
| Hydraulic Assembly | 7 |
| Lower Control Assembly | 8 |
| Upper Handle Assembly | 9 |
| Electrical Assembly | 11 |
| Deck Assembly | 12 |
| Front Castor, Belt Tension, and Blade Brake System Assembly | 13 |
| Spindle, Blade and Belt Assembly | 15 |
| Crankcase Assembly Kohler Model CV15T–41608 | 16 |
| Oil Pan and Lubrication Assembly Kohler Model CV15T–41608 | 17 |
| Cylinder Head, Valve and Breather Assembly Kohler Model CV15T–41608 | 18 |
| Ignition and Electrical Assembly Kohler Model CV15T–41608 | 19 |
| Blower Housing And Baffle Assembly Kohler Model CV15T–41608 | 20 |
| Starter Assembly Kohler Model CV15T–41608 | 21 |
| Fuel System Assembly Kohler Model CV15T–41608 | 22 |
| Engine Controls Assembly Kohler Model CV15T–41608 | 23 |
| Air Cleaner Assembly Kohler Model CV15T–41608 | 24 |
| Exhaust Assembly Kohler Model CV15T–41608 | 25 |


# Accessories

| Description | Model / Part No. |
|---|---|
| Recycler Kit | 30142 |
| Bagging Kit | 30198 |
| Low Sail Blades | 103–2508 |
| Parking Brake | 106–2746 |
| Atomic Blade | 104–8590 |

# Part Description Abbreviations

Part descriptions in this catalog may include the following abbreviations.

| Abbreviation | Meaning |
|---|---|
| AR | as required |
| ASM | assembly |
| CARR | carriage |
| DEG | degrees |
| FH | flat head |
| GA | gauge |
| HF | hex flange |
| HH | hex head |
| HHF | hex head flange |
| HLH | hex lag head |
| HJ | hex jam |
| HOC | height-of-cut |
| HS | hex socket |
| HSBH | hex socket button head |
| HSFH | hex socket flat head |
| HSH | hex socket head |
| HWH | hex washer head |
| HWHTF | hex washer head thread forming |
| HYD | hydraulic |
| INC | incorporated |
| LH | left hand |
| NI | nylon insert |
| PPH | Phillips pan head |
| PTH | Phillips truss head |
| PTO | power take off |
| RH | right hand |
| SFH | slotted fillister head |
| SHH | slotted hex head |
| SQH | square head |
| SHWH | slotted hex washer head |
| SPH | slotted pan head |
| SRH | slotted round head |
| STD | standard |
| TAP | self tapping |
| TTH | Torx truss head |
| WH | wing head |

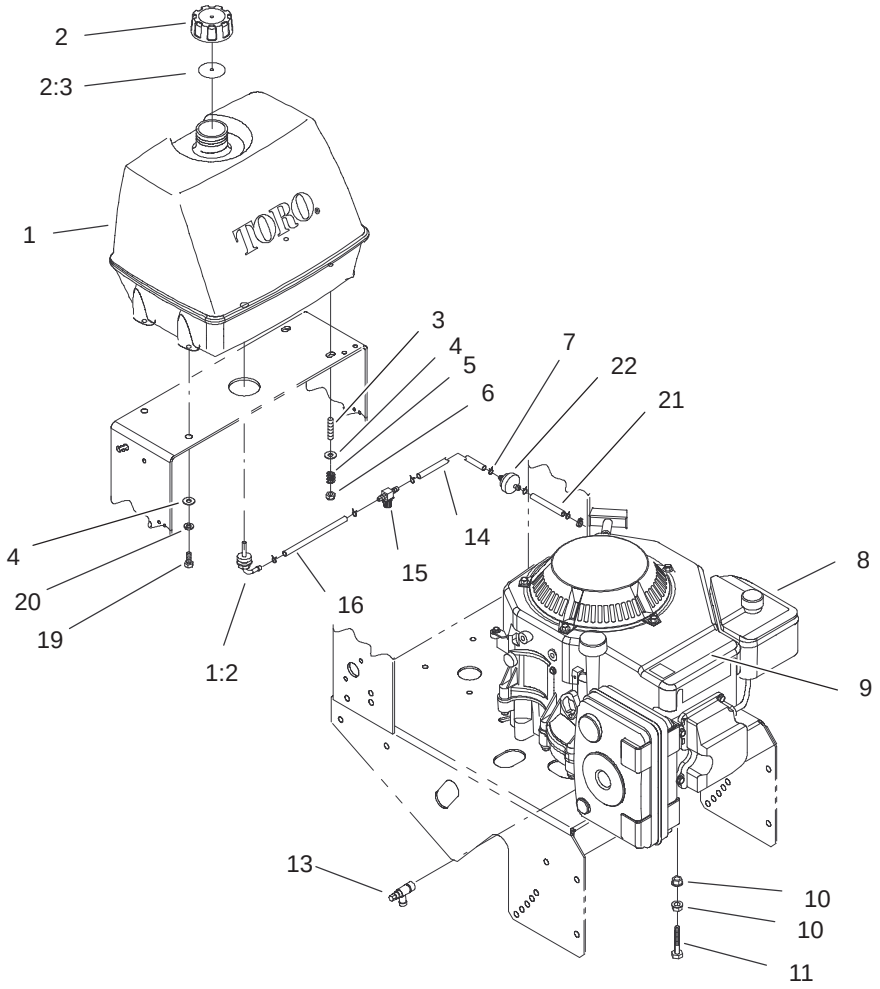


Sheet No.:2

# Engine and Fuel System Assembly

| Ref. No. | Part No. | Qty. | Description |
|---|---|---|---|
| 1 | 106–0730 | 1 | Fuel Tank ASM |
| 1:2 | 103–2605 | 1 | Fitting–Fuel, Bulkhead |
| 2 | 88–3980 | 1 | Gas Cap ASM |
| 2:3 | 88–4010 | 1 | Gasket–Cap, Gas |
| 3 | 1–633023 | 2 | Stud |
| 4 | 3256–23 | 4 | Washer–Flat |
| 5 | 1–633349 | 2 | Spring–Tank, Fuel |
| 6 | 3296–47 | 2 | Nut–Lock, NI |
| 7 | 1–303077 | 6 | Clamp |
| ☆8 | | 1 | Engine–Kohler, Cv15t–41608 |
| 9 | 106–0699 | 1 | Decal–Warning, Hot Surfaces |
| 10 | 3290–357 | 2 | Nut–HHF |
| 11 | 323–13 | 1 | Screw–HH |
| 13 | 103–1965 | 1 | Valve–Drain, Oil |
| 14 | 103–2944 | 1 | Line–Fuel |
| 15 | 1–603776 | 1 | Hose–Line, Fuel |
| 16 | 1–603955 | 1 | Hose–Fuel |
| 19 | 322–3 | 2 | Screw–HH |
| 20 | 1–805005 | 2 | Washer–Lock |
| 21 | 1–603954 | 1 | Hose–Line, Fuel |
| 22 | 1–303197 | 1 | Filter–Fuel |

| Ref. No. | Part No. | Qty. | Description |
|---|---|---|---|

☆ Not serviced separately

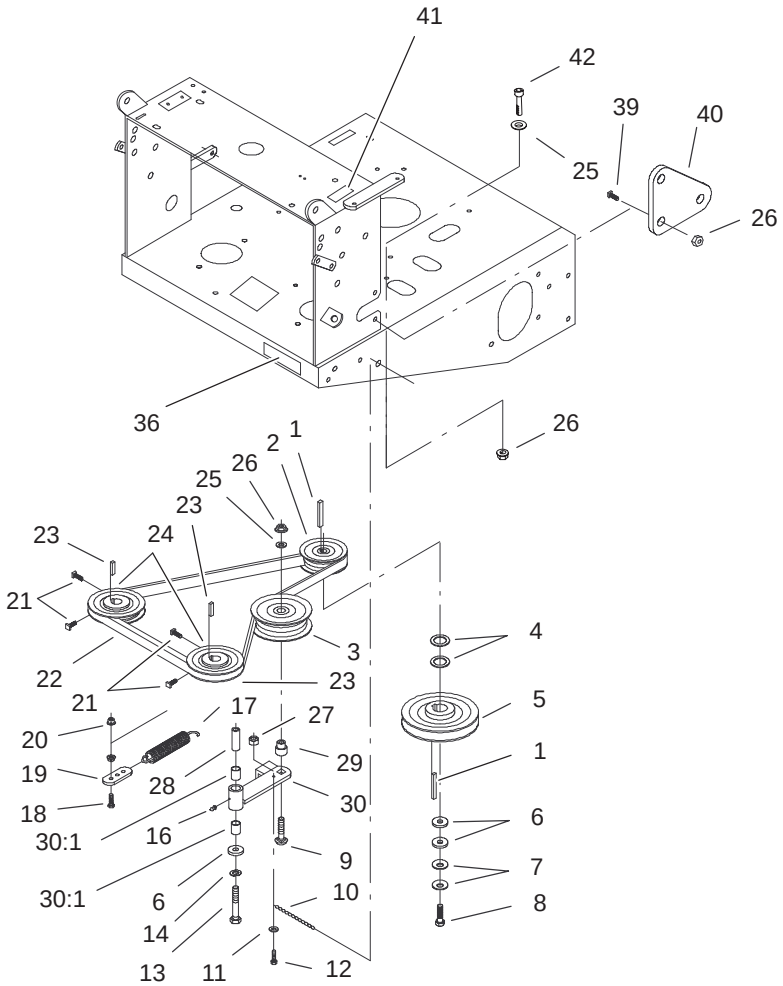


Sheet No.:3

# Transmission and Drive Pulley Assembly

| Ref. No. | Part No. | Qty. | Description |
|---|---|---|---|
| 1 | 1–807259 | 2 | Key |
| 2 | 1–653035 | 1 | Sheave W/Hub |
| 3 | 1–603843 | 1 | Pulley–Idler |
| 4 | 1–523157 | 2 | Washer–Spacer |
| 5 | 103–1668 | 1 | Sheave |
| 6 | 1–373034 | 3 | Washer |
| 7 | 1–603610 | 2 | Washer–Spring |
| 8 | 3212–6 | 1 | Screw–HH |
| 9 | 3231–29 | 1 | Screw–CARR |
| 10 | 1–323365 | 1 | Chain–Link, Twist |
| 11 | 3256–14 | 1 | Washer–Flat |
| 12 | 1–809069 | 1 | Screw–Cap HH |
| 13 | 323–12 | 1 | Screw–HH |
| 14 | 3253–5 | 1 | Washer–Lock |
| 16 | 302–19 | 1 | Fitting–Grease |
| 17 | 1–603402 | 1 | Spring–Extension |
| 18 | 322–5 | 1 | Screw–HH |
| 19 | 1–603801 | 1 | Anchor–Spring |
| 20 | 32128–20 | 6 | Nut–HF |
| 21 | 1–803050 | 4 | Screw–Set |
| 22 | 106–2740 | 1 | V–Belt–Hydro Drive |
| 23 | 1–807272 | 2 | Key |
| 24 | 1–413010 | 2 | Sheave W/Hub |
| 25 | 3256–24 | 2 | Washer–Flat |
| 26 | 3290–357 | 7 | Nut–HHF |
| 27 | 3296–2 | 1 | Nut–Lock |

| Ref. No. | Part No. | Qty. | Description |
|---|---|---|---|
| 28 | 1–603044 | 1 | Bushing |
| 29 | 1–603496 | 1 | Bushing–Idler |
| 30 | 1–602521 | 1 | Idler Arm ASM |
| 30:1 | 1–513034 | 2 | Sleeve–Bearing |
| 36 | 98–0776 | 1 | Decal–Caution |
| 39 | 323–4 | 2 | Screw–HH |
| 40 | 1–413497 | 1 | Bellcrank |
| 41 | 95–2814 | 1 | Decal–Shut Off, Fuel |
| 42 | 323–7 | 1 | Screw–HH |

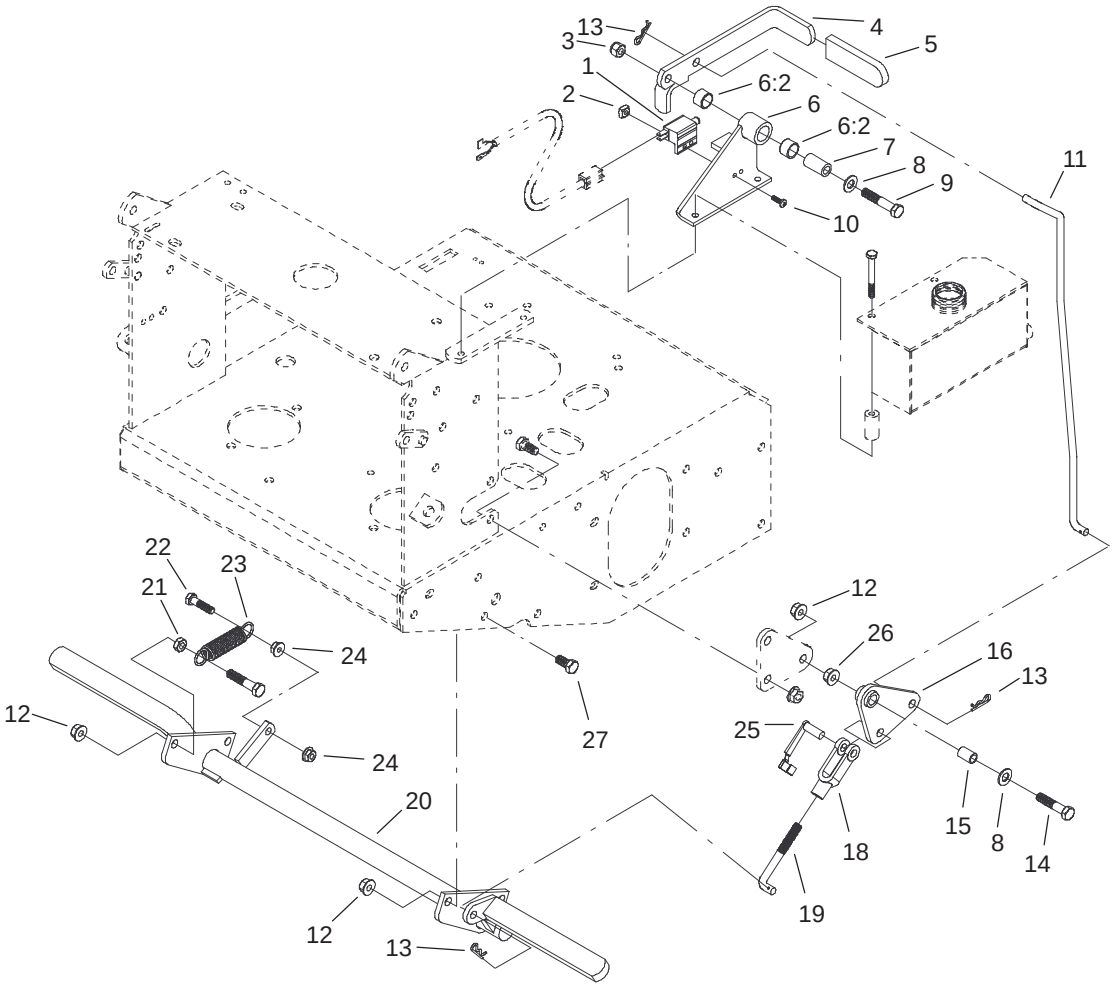


Sheet No.:4

# Linkage Assembly

| Ref. No. | Part No. | Qty. | Description |
|---|---|---|---|
| 1 | 1–513051 | 1 | Switch–Open, Normally |
| 2 | 1–633181 | 1 | Plate–Tapped |
| 3 | 3296–39 | 1 | Nut–Lock, NI |
| 4 | 1–412501–03 | 1 | Lever–Parkbrake |
| 5 | 1–303020 | 1 | Grip–Lever |
| 6 | 1–414504 | 1 | Bracket ASM |
| 6:2 | 1–413347 | 2 | Sleeve–Bushing |
| 7 | 1–413344 | 1 | Bushing–Pivot |
| 8 | 3256–24 | 2 | Washer–Flat |
| 9 | 323–10 | 1 | Screw–HH |
| 10 | 3290–500 | 2 | Screw–PPH |
| 11 | 1–413496 | 1 | Linkage–Upper |
| 12 | 3290–357 | 5 | Nut–HHF |
| 13 | 1–806003 | 3 | Pin–Hair |
| 14 | 323–9 | 2 | Screw–HH |
| 15 | 1–303548 | 1 | Bushing–Plastic |
| 16 | 1–414508 | 1 | Bellcrank ASM |
| 18 | 1–633131 | 1 | Yoke–Linkage, Brake |
| 19 | 1–413489 | 1 | Linkage–Lower |
| 20 | 103–2085–03 | 1 | Brake |
| 21 | 3218–3 | 1 | Nut–Jam |
| 22 | 322–6 | 1 | Screw–HH |
| 23 | 1–323161 | 1 | Spring–Idler |
| 24 | 32128–20 | 2 | Nut–HF |
| 25 | 103–2399 | 1 | Pin–Spring, Clevis |

| Ref. No. | Part No. | Qty. | Description |
|---|---|---|---|
| 26 | 32128–21 | 1 | Nut–HF |
| 27 | 323–4 | 3 | Screw–HH |

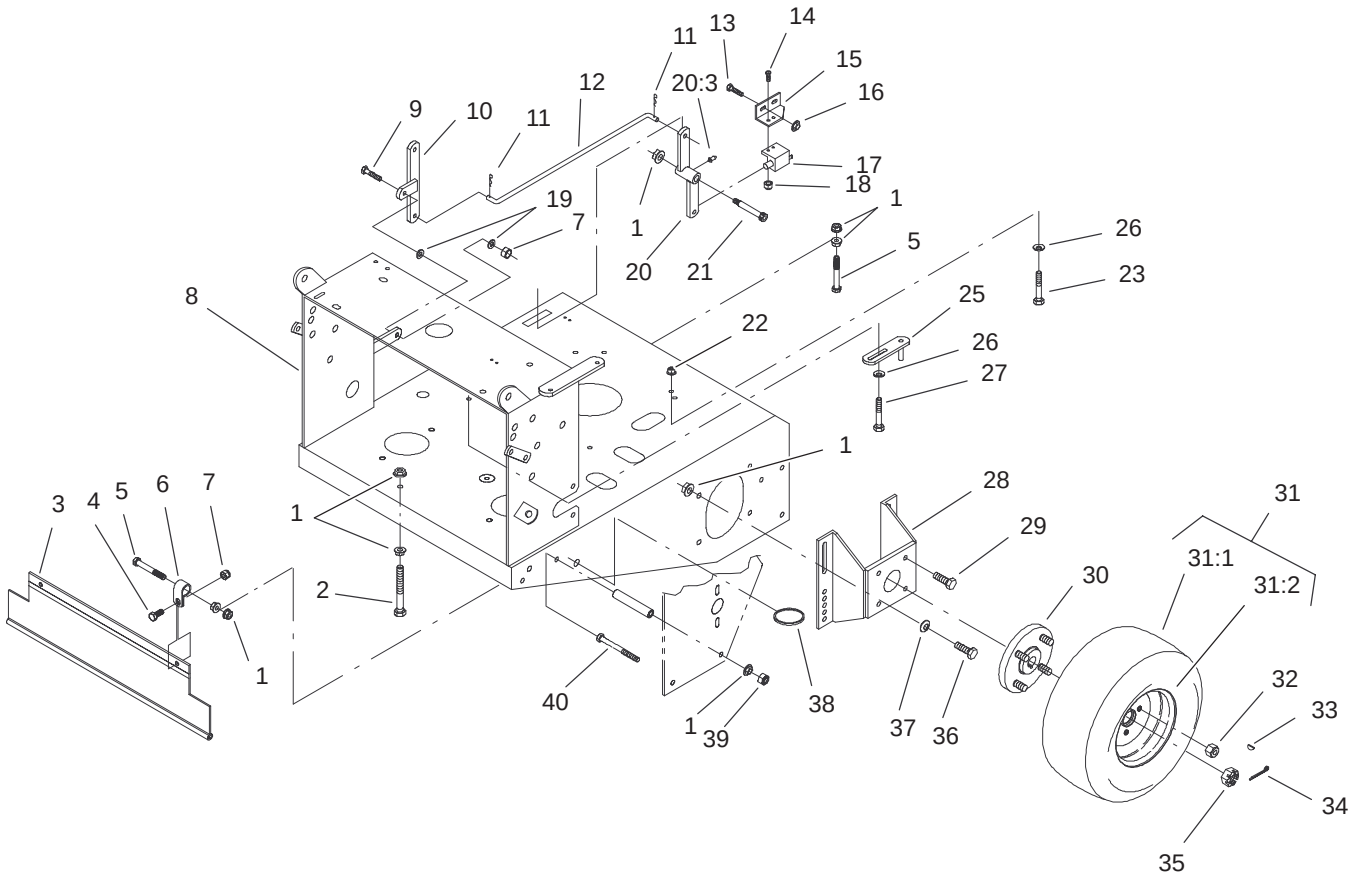


Sheet No.:5

# Wheel Drive Assembly

| Ref. No. | Part No. | Qty. | Description |
|---|---|---|---|
| 1 | 3290–357 | 8 | Nut–HHF |
| 2 | 323–11 | 1 | Screw–HH |
| 3 | 103–2056 | 1 | Shield–Drag |
| 4 | 322–3 | 2 | Screw–HH |
| 5 | 323–13 | 4 | Screw–HH |
| 6 | 1–413510 | 2 | Clip–Loom |
| 7 | 3296–29 | 3 | Nut–Lock, NI |
| 8 | 103–2908–01 | 1 | Deck–Rear |
| 9 | 322–6 | 2 | Screw–HH |
| 10 | 1–322090–01 | 1 | Bellcrank |
| 11 | 1–806003 | 3 | Pin–Hair |
| 12 | 1–323172 | 1 | Linkage–Engage, Blade |
| 13 | 321–3 | 2 | Screw–HH |
| 14 | 3290–500 | 2 | Screw–PPH |
| 15 | 1–323213 | 1 | Bracket–Switch, Blade |
| 16 | 32128–33 | 2 | Nut–HF |
| 17 | 1–513051 | 1 | Switch–Open, Normally |
| 18 | 1–633181 | 1 | Plate–Tapped |
| 19 | 3256–23 | 5 | Washer–Flat |
| 20 | 1–322108 | 1 | Bellcrank ASM |
| 20:3 | 302–40 | 1 | Fitting–Grease |
| 21 | 1–809062 | 1 | Screw |
| 22 | 32128–20 | 6 | Nut–HF |
| 23 | 33114–025 | 3 | Screw–HH |

| Ref. No. | Part No. | Qty. | Description |
|---|---|---|---|
| 25 | 1–322110 | 1 | Guide–Belt |
| 26 | 1–303334 | 4 | Washer–Spring |
| 27 | 33114–030 | 1 | Screw–HH |
| 28 | 1–322162–01 | 2 | Mount–Motor |
| 29 | 3234–12 | 8 | Screw–HHF |
| 30 | 1–602997 | 2 | Hub W/Studs |
| ☆31 | | 2 | Wheel And Tire ASM |
| 31:1 | 1–413474 | 1 | Tire–Turfmaster |
| 31:2 | 1–603715 | 1 | Wheel–Rim |
| 32 | 242–50 | 8 | Nut–Lug |
| 33 | 1–807019 | 2 | Key–Woodruff |
| 34 | 1–806800 | 2 | Pin–Cotter |
| 35 | 32136–5 | 2 | Nut–Slotted |
| 36 | 323–6 | 8 | Screw–HH |
| 37 | 98–5975 | 8 | Washer–Belleville |
| 38 | 1–323366 | 1 | Ring–Split |
| 39 | 3296–39 | 1 | Nut–Lock, NI |
| 40 | 323–23 | 1 | Screw–HH |

☆ Not serviced separately

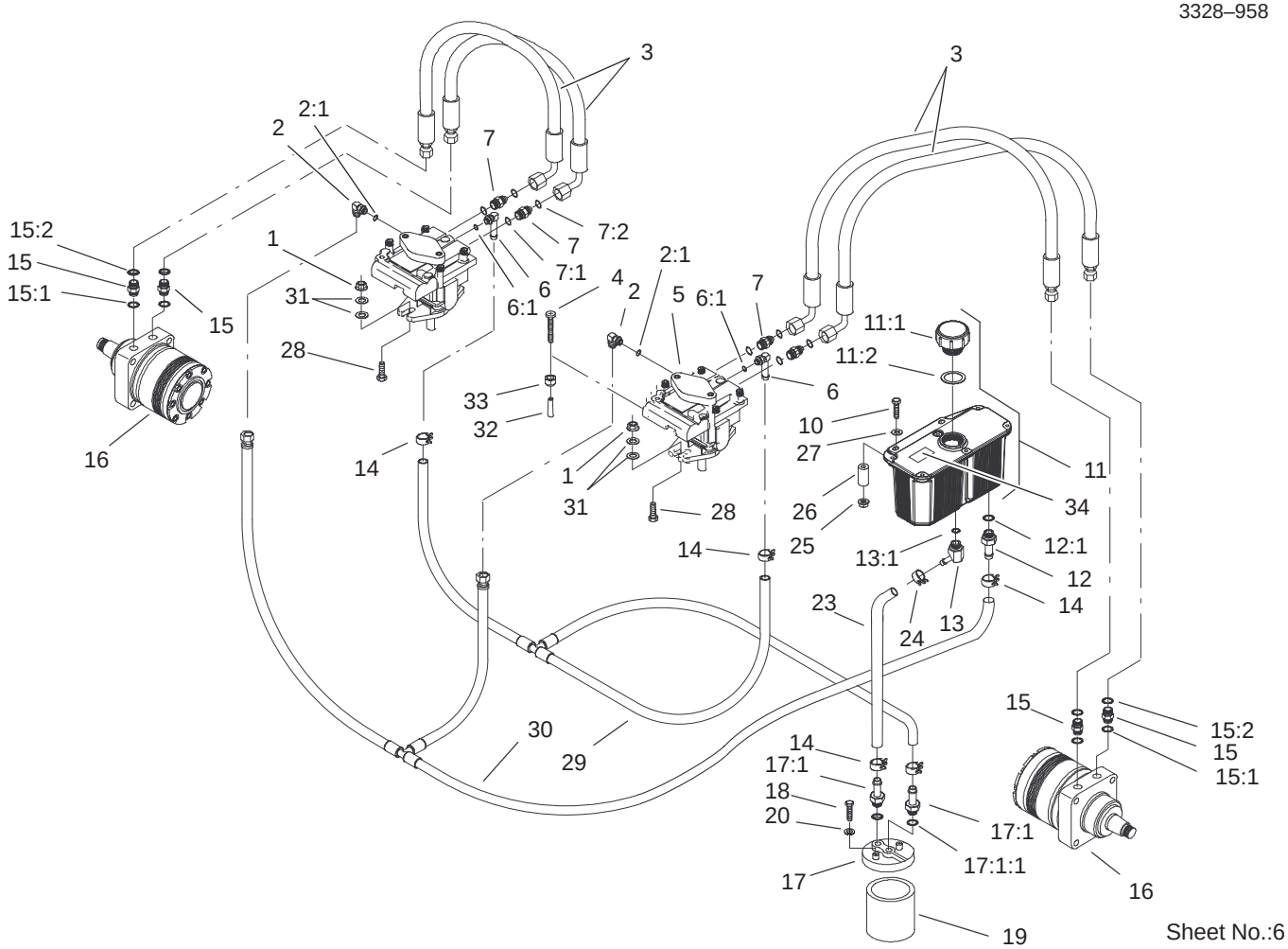


Sheet No.:6

# Hydraulic Assembly

| Ref. No. | Part No. | Qty. | Description |
|---|---|---|---|
| 1 | 3290–357 | 4 | Nut–HHF |
| 2 | 1–513840 | 2 | Fitting–90° |
| 2:1 | 237–42 | 1 | O–Ring |
| 3 | 1–403102 | 4 | Hose–Pressure, High |
| 4 | 1–801063 | 2 | Screw |
| 5 | 1–613042 | 2 | Pump |
| 6 | 1–603989 | 2 | Fitting |
| 6:1 | 237–78 | 1 | O–Ring |
| 7 | 1–603990 | 4 | Fitting–Straight |
| 7:1 | 237–79 | 1 | O–Ring |
| 7:2 | 1–603992 | 1 | O–Ring |
| 10 | 321–15 | 2 | Screw–HH |
| 11 | 103–1946 | 1 | Reservoir–HYD |
| 11:1 | 103–1948 | 1 | Cap–Reservoir, HYD |
| 11:2 | 103–1949 | 1 | Gasket–Cap |
| 12 | 103–1801 | 1 | Adapter–Straight |
| 12:1 | 237–42 | 1 | O–Ring |
| 13 | 103–1807 | 1 | Elbow–45° |
| 13:1 | 237–42 | 1 | O–Ring |
| 14 | 103–1988 | 5 | Clamp–Hose |
| 15 | 1–603991 | 4 | Fitting–Straight |
| 15:1 | 237–80 | 1 | O–Ring |
| 15:2 | 1–603992 | 1 | O–Ring |
| 16 | 1–603718 | 2 | Motor–Wheel |
| 17 | 103–2889 | 1 | Filter Head ASM |
| 17:1 | 103–1912 | 2 | Adapter–Straight |

| Ref. No. | Part No. | Qty. | Description |
|---|---|---|---|
| 17:1:1 | 237–42 | 1 | O–Ring |
| 18 | 321–3 | 2 | Screw–HH |
| 19 | 1–633750 | 1 | Filter–HYD |
| 20 | 1–805004 | 2 | Washer–Lock |
| 23 | 103–2959 | 1 | Hose–Charge |
| 24 | 103–1716 | 1 | Clamp–Hose |
| 25 | 32128–33 | 2 | Nut–HF |
| 26 | 103–2191 | 2 | Spacer |
| 27 | 3256–22 | 2 | Washer–Flat |
| 28 | 323–7 | 4 | Screw–HH |
| 29 | 103–2057 | 1 | HYD Hose ASM |
| 30 | 103–2073 | 1 | HYD Hose ASM |
| 31 | 3256–3 | 8 | Washer–Flat |
| 32 | 1–613073 | 2 | Grip–Valve, Dump |
| 33 | 3296–42 | 2 | Nut–Lock, NI |
| 34 | 1–523552 | 1 | Decal–Tank, HYD |

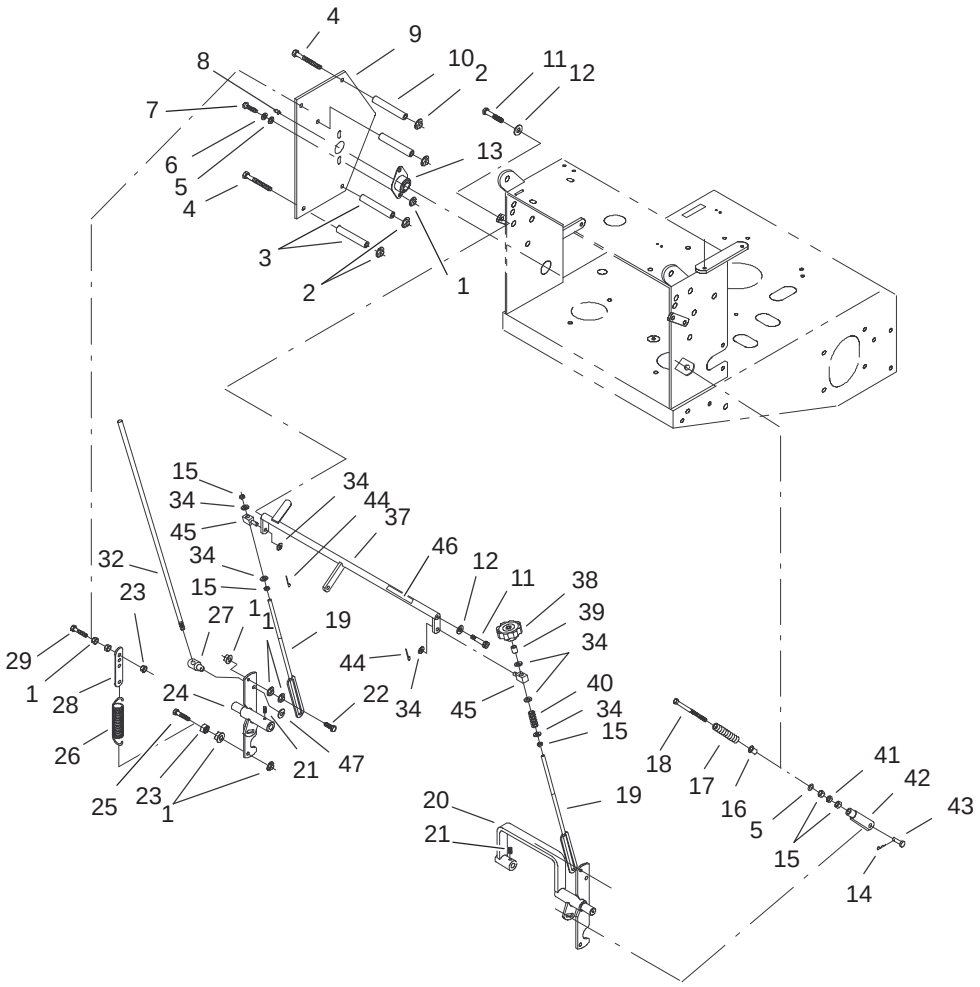

Sheet No.:7

# Lower Control Assembly

| Ref. No. | Part No. | Qty. | Description |
|---|---|---|---|
| 1 | 32128–20 | 12 | Nut–HF |
| 2 | 3290–357 | 8 | Nut–HHF |
| 3 | 1–323197–01 | 4 | Spacer–Shield |
| 4 | 323–16 | 7 | Screw–HH |
| 5 | 3256–2 | 6 | Washer–Flat |
| 6 | 1–805005 | 4 | Washer–Lock |
| 7 | 322–3 | 4 | Screw–HH |
| 8 | 302–19 | 2 | Fitting–Grease |
| 9 | 1–413201–01 | 2 | Shield |
| 10 | 1–323195–01 | 4 | Spacer–Shield |
| 11 | 1–809056 | 2 | Screw |
| 12 | 3256–24 | 2 | Washer–Flat |
| 13 | 1–633102 | 2 | Bearing–Flange, Side |
| 14 | 1–806003 | 2 | Pin–Hair |
| 15 | 3219–2 | 7 | Nut–Hex |
| 16 | 1–603735 | 2 | Bushing–Flanged |
| 17 | 1–603807 | 2 | Spring–Return, Neutral |
| 18 | 1–603737 | 2 | Bolt–Return, Neutral |
| 19 | 1–413350 | 2 | Link–Control, Speed |
| 20 | 103–1191–01 | 1 | Shaft–Control, RH |
| 21 | 1–803022 | 2 | Screw–Set |
| 22 | 1–403180 | 2 | Screw–HH |
| 23 | 3296–29 | 4 | Nut–Lock, NI |
| 24 | 103–1190–01 | 1 | Shaft–Control, LH |
| 25 | 322–6 | 2 | Screw–HH |

| Ref. No. | Part No. | Qty. | Description |
|---|---|---|---|
| 26 | 1–603693 | 2 | Spring–Extension |
| 27 | 103–1235 | 2 | Swivel–Lever, Drive |
| 28 | 1–613089 | 2 | Tab–Spring, Extension |
| 29 | 1–800016 | 2 | Bolt–TAP HH |
| 32 | 1–413219 | 2 | Rod–Lever, Drive |
| 34 | 3256–23 | 7 | Washer–Flat |
| 37 | 1–412203–01 | 1 | Crank–Control, Speed |
| 38 | 1–413151 | 1 | Knob–Tracking |
| 39 | 1–603903 | 1 | Spacer |
| 40 | 1–323245 | 1 | Spring–Compression |
| 41 | 3220–2 | 2 | Nut |
| 42 | 1–303105 | 2 | Yoke–Adjustable |
| 43 | 1–808280 | 2 | Pin–Clevis |
| 44 | 3272–5 | 2 | Pin–Cotter |
| 45 | 1–603676 | 2 | Swivel–Adjustable, Short |
| 46 | 105–4109 | 1 | Decal–Tracking |
| 47 | 32151–47 | 2 | Ring–Retaining |

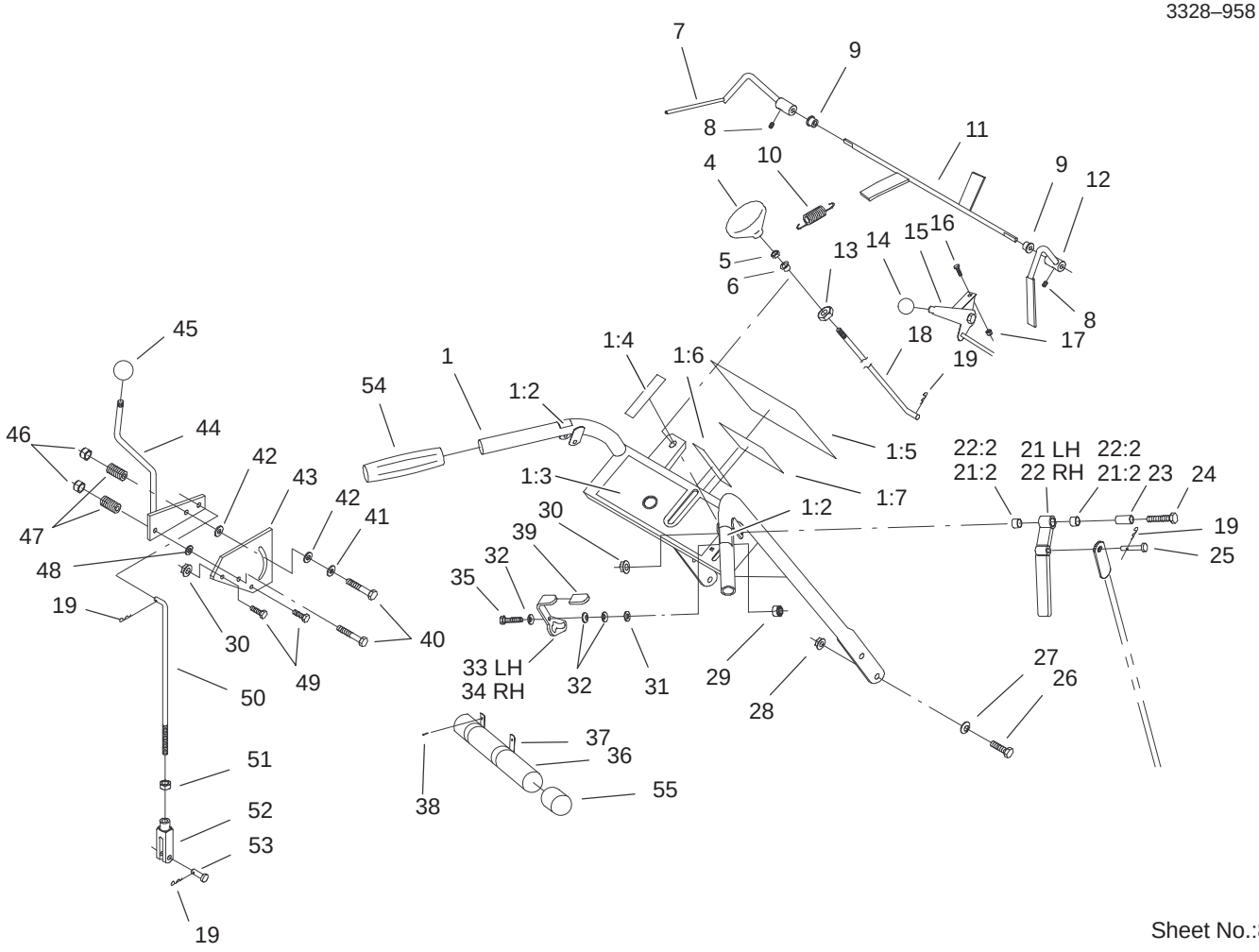


Sheet No.:8

# Upper Handle Assembly

| Ref. No. | Part No. | Qty. | Description |
|---|---|---|---|
| 1 | 106–0751 | 1 | Handle ASM |
| 1:2 | 105–4110 | 2 | Decal–Lock, Neutral |
| 1:3 | 106–2738 | 1 | Decal–Warning |
| 1:4 | 1–323689 | 1 | Decal,Throttle |
| 1:5 | 106–0750 | 1 | Decal–Proline |
| 1:6 | 95–5537 | 1 | Decal–Engage, Deck |
| 1:7 | 106–2743 | 1 | Decal–Caution, Brake |
| 4 | 1–323134 | 1 | Knob–Push/Pull |
| 5 | 3218–2 | 1 | Nut–Jam |
| 6 | 1–323143 | 1 | Bearing–Nylon |
| 7 | 1–412183–03 | 1 | Lever–LH |
| 8 | 1–803322 | 2 | Screw–Set |
| 9 | 1–303365 | 2 | Bushing–Nylon |
| 10 | 1–303363 | 1 | Spring–Extension |
| 11 | 106–2717–03 | 1 | Operator Presence Control Rod ASM |
| 12 | 1–412185–03 | 1 | Lever–RH |
| 13 | 1–323142 | 1 | Nut–Push |
| 14 | 1–513592 | 1 | Knob–Ball |
| 15 | 1–323322 | 1 | Cable–Control, Throttle |
| 16 | 1–807513 | 2 | Bolt–CARR |
| 17 | 3296–2 | 2 | Nut–Lock |
| 18 | 1–323181 | 1 | Linkage–Blade |
| 19 | 1–806003 | 3 | Pin–Hair |
| 21 | 103–0218 | 1 | LH Drive Lever ASM |

| Ref. No. | Part No. | Qty. | Description |
|---|---|---|---|
| 21:2 | 1–413152 | 2 | Sleeve–Bushing |
| 22 | 103–0219 | 1 | RH Drive Lever ASM |
| 22:2 | 1–413152 | 2 | Sleeve–Bushing |
| 23 | 1–603749 | 2 | Bushing–Lever, Drive |
| 24 | 321–9 | 2 | Screw–HH |
| 25 | 1–613055 | 2 | Pin–Clevis |
| 26 | 323–6 | 4 | Screw–HH |
| 27 | 98–5975 | 4 | Washer–Belleville |
| 28 | 3290–357 | 4 | Nut–HHF |
| 29 | 3296–42 | 2 | Nut–Lock, NI |
| 30 | 32128–33 | 4 | Nut–HF |
| 31 | 3256–2 | 2 | Washer–Flat |
| 32 | 1–303435 | 6 | Washer–Spring |
| 33 | 1–413148 | 1 | Latch–Lever, LH Drive |
| 34 | 1–413150 | 1 | Latch–Lever, RH Drive |
| 35 | 321–10 | 2 | Screw–HH |
| 36 | 104–7050 | 1 | Housing–Manual |
| 37 | 2412–120 | 2 | R–Clamp |
| 38 | 32104–76 | 2 | Screw |
| 39 | 1–303019 | 2 | Grip–Latch |
| 40 | 322–10 | 2 | Screw–HH |
| 41 | 1–603716 | 1 | Washer–Friction |
| 42 | 1–323244 | 2 | Washer–Friction |
| 43 | 1–603730 | 1 | Plate–Lever, Shifter |
| 44 | 106–2748 | 1 | Lever–Shift |
| 45 | 1–603175 | 1 | Knob–Ball |

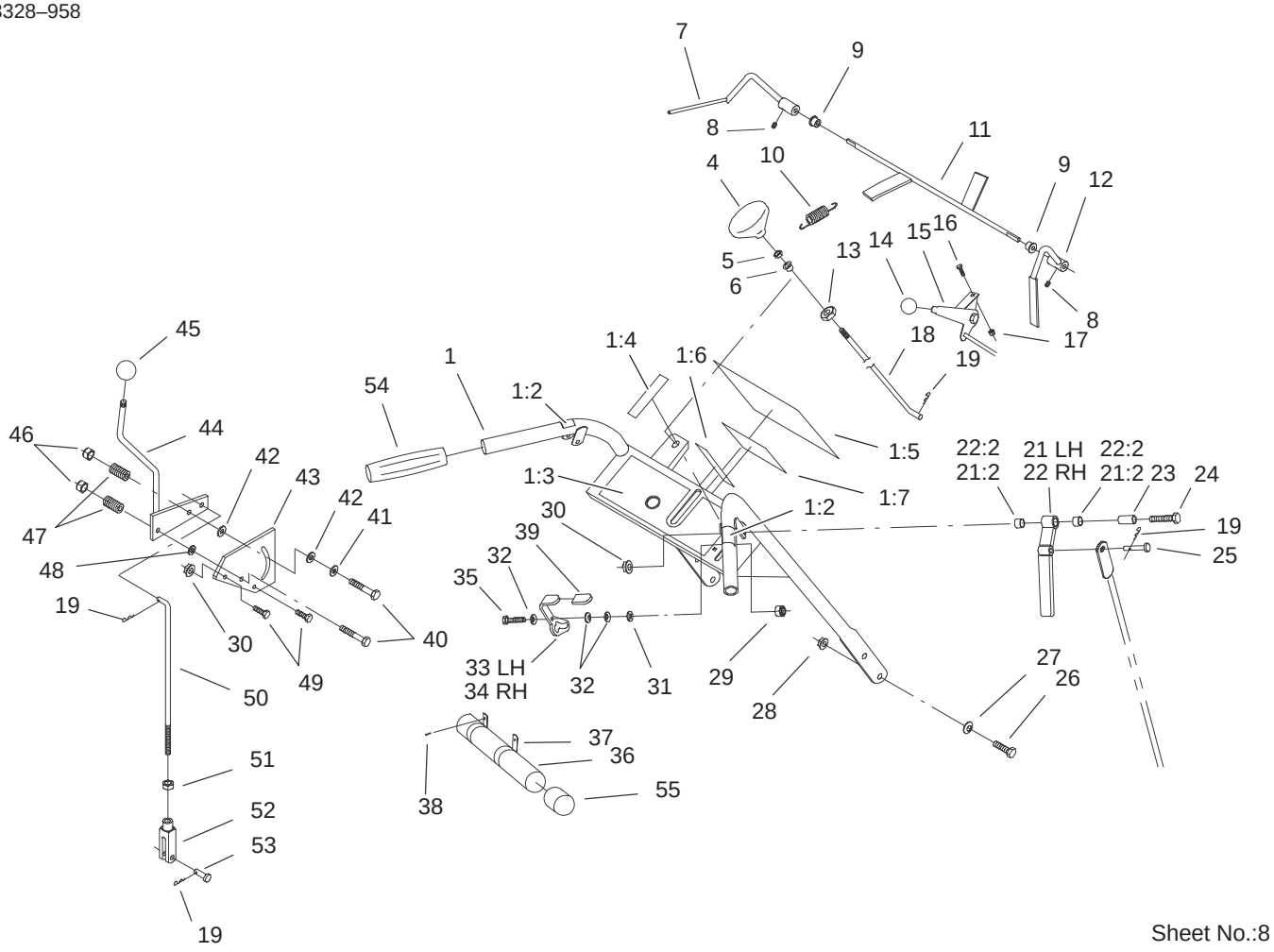


Sheet No.:8

# Upper Handle Assembly (Continued)

| Ref. No. | Part No. | Qty. | Description |
|---|---|---|---|
| 46 | 3296–29 | 2 | Nut–Lock, NI |
| 47 | 1–323245 | 2 | Spring–Compression |
| 48 | 3256–23 | 1 | Washer–Flat |
| 49 | 321–3 | 2 | Screw–HH |
| 50 | 1–323522 | 1 | Rod–Control, Speed |
| 51 | 3220–2 | 1 | Nut |
| 52 | 1–303105 | 1 | Yoke–Adjustable |
| 53 | 1–808280 | 1 | Pin–Clevis |
| 54 | 1–303097 | 2 | Grip–Handle |
| 55 | 104–7048 | 1 | Cap–Housing |

| Ref. No. | Part No. | Qty. | Description |
|---|---|---|---|

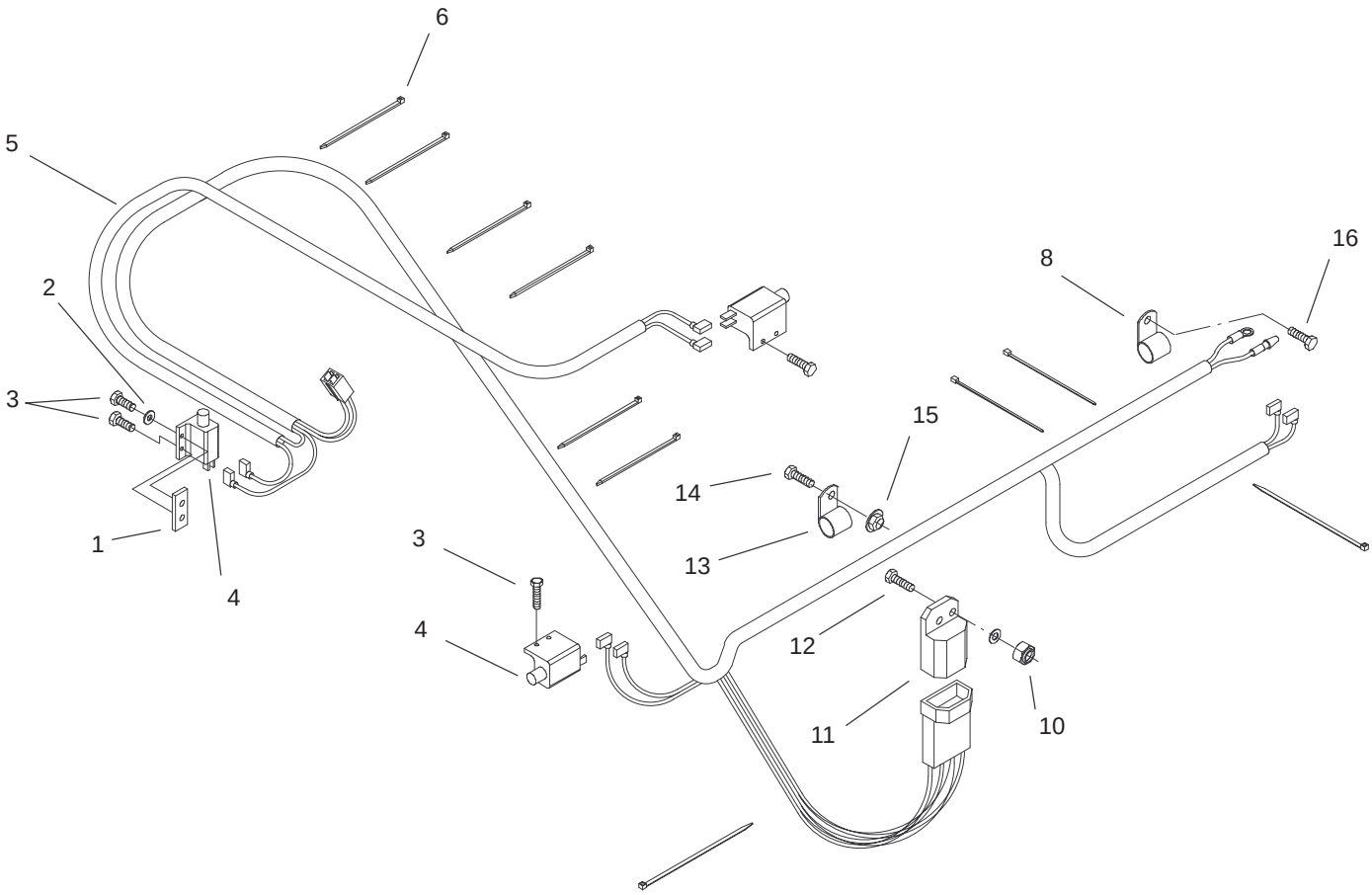


Sheet No.:9

# Electrical Assembly

| Ref. No. | Part No. | Qty. | Description |
|---|---|---|---|
| 1 | 1–633181 | 2 | Plate–Tapped |
| 2 | 3256–14 | 1 | Washer–Flat |
| 3 | 3290–500 | 3 | Screw–PPH |
| 4 | 1–513051 | 2 | Switch–Open, Normally |
| 5 | 103–2286 | 1 | Harness–Wire |
| 6 | 1–303287 | 6 | Tie–Plastic |
| 8 | 1–413510 | 1 | Clip–Loom |
| 10 | 3296–42 | 2 | Nut–Lock, NI |
| 11 | 1–323430 | 1 | Module–Interlock |
| 12 | 321–4 | 1 | Screw–HH |
| 13 | 1–603727 | 1 | Clip–Loom |
| 14 | 321–3 | 1 | Screw–HH |
| 15 | 32128–33 | 1 | Nut–HF |
| 16 | 33114–016 | 1 | Screw–HH |

| Ref. No. | Part No. | Qty. | Description |
|---|---|---|---|

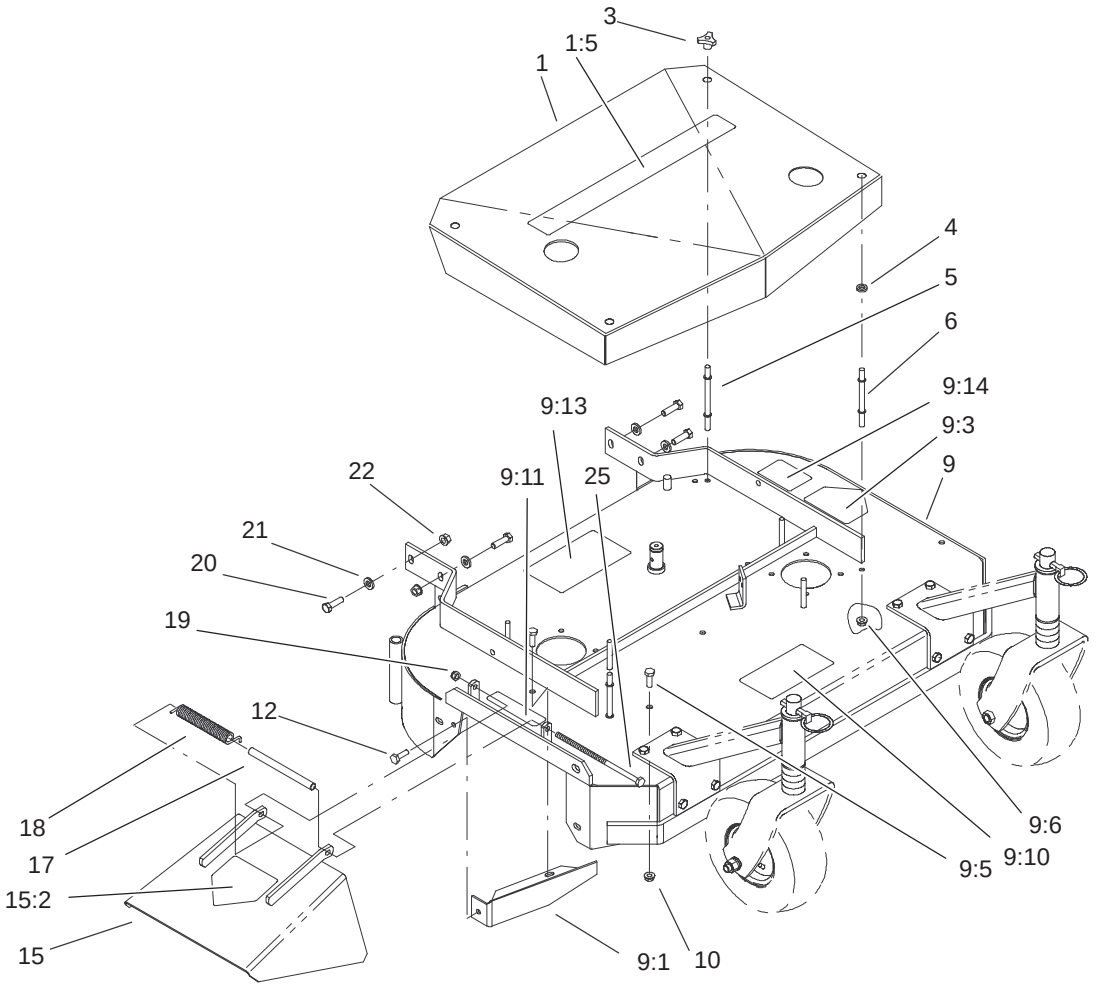


Sheet No.:10

# Deck Assembly

| Ref. No. | Part No. | Qty. | Description |
|---|---|---|---|
| 1 | 1–304258 | 1 | Belt Shield ASM |
| 1:5 | 106–0711 | 1 | Decal–Proline 36 |
| 3 | 1–323385 | 4 | Knob–3 Prong |
| 4 | 1–323417 | 4 | Washer |
| 5 | 1–303536 | 2 | Stud–Shield, Belt (Long) |
| 6 | 1–303537 | 2 | Stud–Shield, Belt (Short) |
| 9 | 105–4680 | 1 | Deck ASM |
| 9:1 | 1–302189–01 | 1 | Baffle |
| 9:3 | 1–403005 | 1 | Decal–Danger |
| 9:5 | 322–2 | 8 | Screw–HH |
| 9:6 | 32128–20 | 8 | Nut–HF |
| 9:10 | 66–1340 | 1 | Decal–Danger |
| 9:11 | 98–5954 | 1 | Decal–Missing, Cover |
| 9:13 | 98–3296 | 1 | Decal–Routing, Belt |
| 9:14 | 98–5130 | 1 | Decal–Torque |
| 10 | 32128–20 | 12 | Nut–HF |
| 12 | 322–2 | 7 | Screw–HH |
| 15 | 1–304256 | 1 | Chute–Discharge |
| 15:2 | 54–9220 | 1 | Decal–Danger |
| 17 | 98–3281 | 1 | Spacer–Spring |
| 18 | 98–3280 | 1 | Spring–Deflector |
| 19 | 3296–29 | 1 | Nut–Lock, NI |
| 20 | 323–8 | 6 | Screw–HH |
| 21 | 98–5975 | 6 | Washer–Belleville |

| Ref. No. | Part No. | Qty. | Description |
|---|---|---|---|
| 22 | 3290–357 | 14 | Nut–HHF |
| 25 | 322–50 | 1 | Screw–HH |

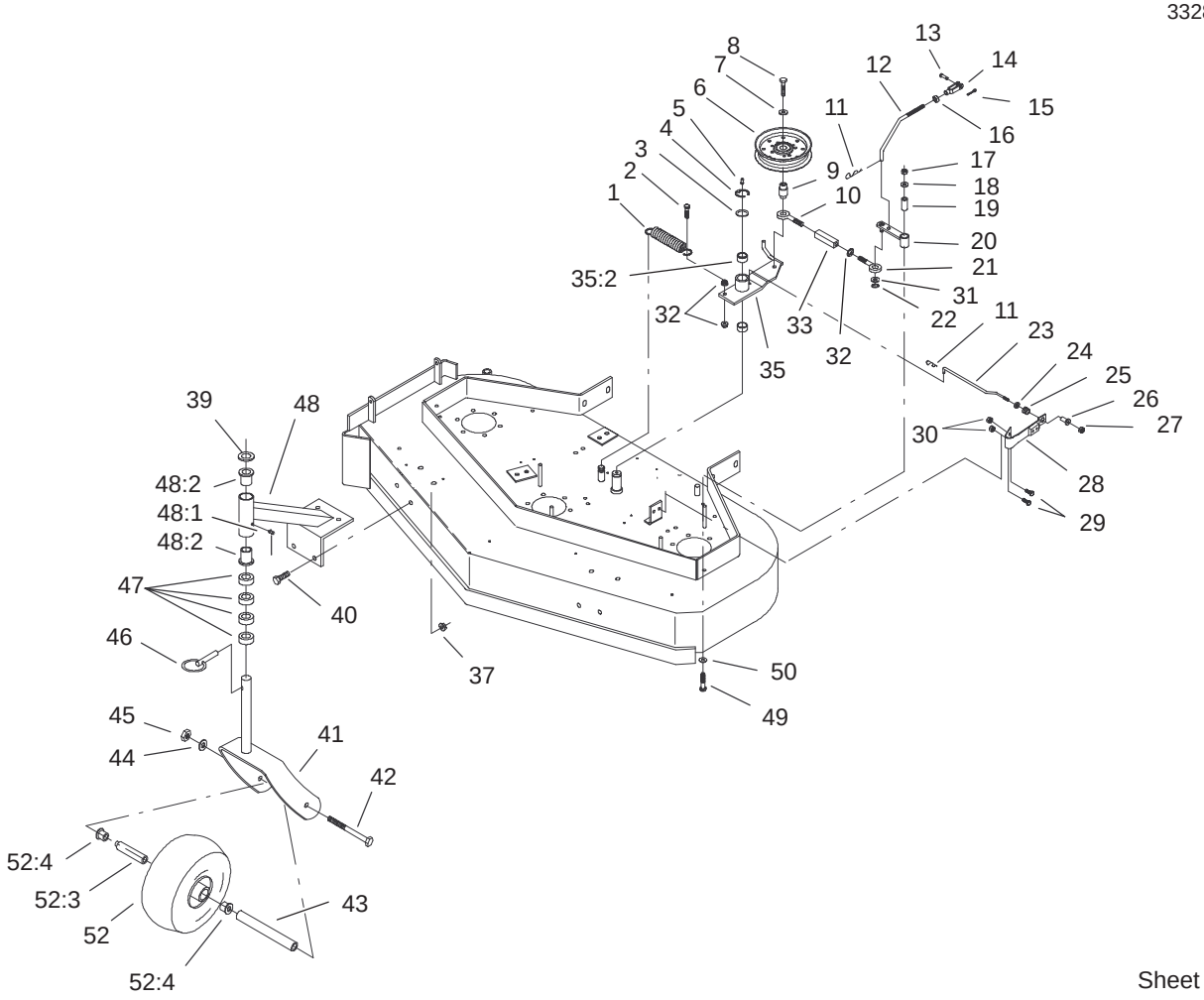


Sheet No.:12

# Front Castor, Belt Tension, and Blade Brake System Assembly

| Ref. No. | Part No. | Qty. | Description |
|---|---|---|---|
| 1 | 1–323071 | 1 | Spring–Extension |
| 2 | 322–6 | 1 | Screw–HH |
| 3 | 1–303352 | 1 | Washer–Spindle |
| 4 | 32151–103 | 1 | Ring–Snap |
| 5 | 302–19 | 1 | Fitting–Grease |
| 6 | 1–603843 | 1 | Pulley–Idler |
| 7 | 98–5975 | 3 | Washer–Belleville |
| 8 | 702809 | 1 | Screw–Cap |
| 9 | 1–303434 | 1 | Bushing–Engagement |
| 10 | 1–303348 | 1 | Eyebolt–Thread, LH |
| 11 | 1–806003 | 3 | Pin–Hair |
| 12 | 1–323174 | 1 | Linkage–Arm, Assist |
| 13 | 1–808280 | 1 | Pin–Clevis |
| 14 | 1–303105 | 1 | Yoke–Adjustable |
| 15 | 3272–5 | 1 | Pin–Cotter |
| 16 | 3219–2 | 1 | Nut–Hex |
| 17 | 3296–29 | 1 | Nut–Lock, NI |
| 18 | 3256–3 | 1 | Washer–Flat |
| 19 | 1–403179 | 1 | Tube–Pivot |
| 20 | 1–322235 | 1 | Arm–Assist |
| 21 | 1–303238 | 1 | Eyebolt–Thread, RH |
| 22 | 32120–35 | 1 | E–Ring |
| 23 | 1–323715 | 1 | Rod–Brake |
| 24 | 1–323748 | 1 | Ring–Push On |

| Ref. No. | Part No. | Qty. | Description |
|---|---|---|---|
| 25 | 1–323747 | 1 | Spring–Compression |
| 26 | 1–323746 | 1 | Spacer–Flanged |
| 27 | 3296–56 | 1 | Nut–Lock, NI |
| 28 | 1–324372 | 1 | Pad/Spring ASM |
| 29 | 321–4 | 2 | Screw–HH |
| 30 | 3296–42 | 2 | Nut–Lock, NI |
| 31 | 3256–23 | 1 | Washer–Flat |
| 32 | 32128–20 | 3 | Nut–HF |
| 33 | 1–303236 | 1 | Body–Turnbuckle |
| 35 | 103–3600 | 1 | Idler Arm ASM |
| 35:2 | 1–323729 | 2 | Sleeve–Bearing |
| 37 | 3290–357 | 8 | Nut–HHF |
| 39 | 1–513338 | 2 | Washer–Flat |
| 40 | 323–4 | 8 | Screw–HH |
| 41 | 1–322145–01 | 2 | Fork |
| 42 | 325–20 | 2 | Screw–HH |
| 43 | 1–513547 | 2 | Spacer |
| 44 | 3253–7 | 2 | Washer–Lock |
| 45 | 3217–9 | 2 | Nut–HH |
| 46 | 1–809020 | 2 | Pin |
| 47 | 1–303314 | 8 | Spacer–Caster |
| 48 | 1–302203 | 2 | Support ASM |
| 48:1 | 302–52 | 1 | Fitting–Grease |
| 48:2 | 1–303514 | 2 | Bearing–Flanged |

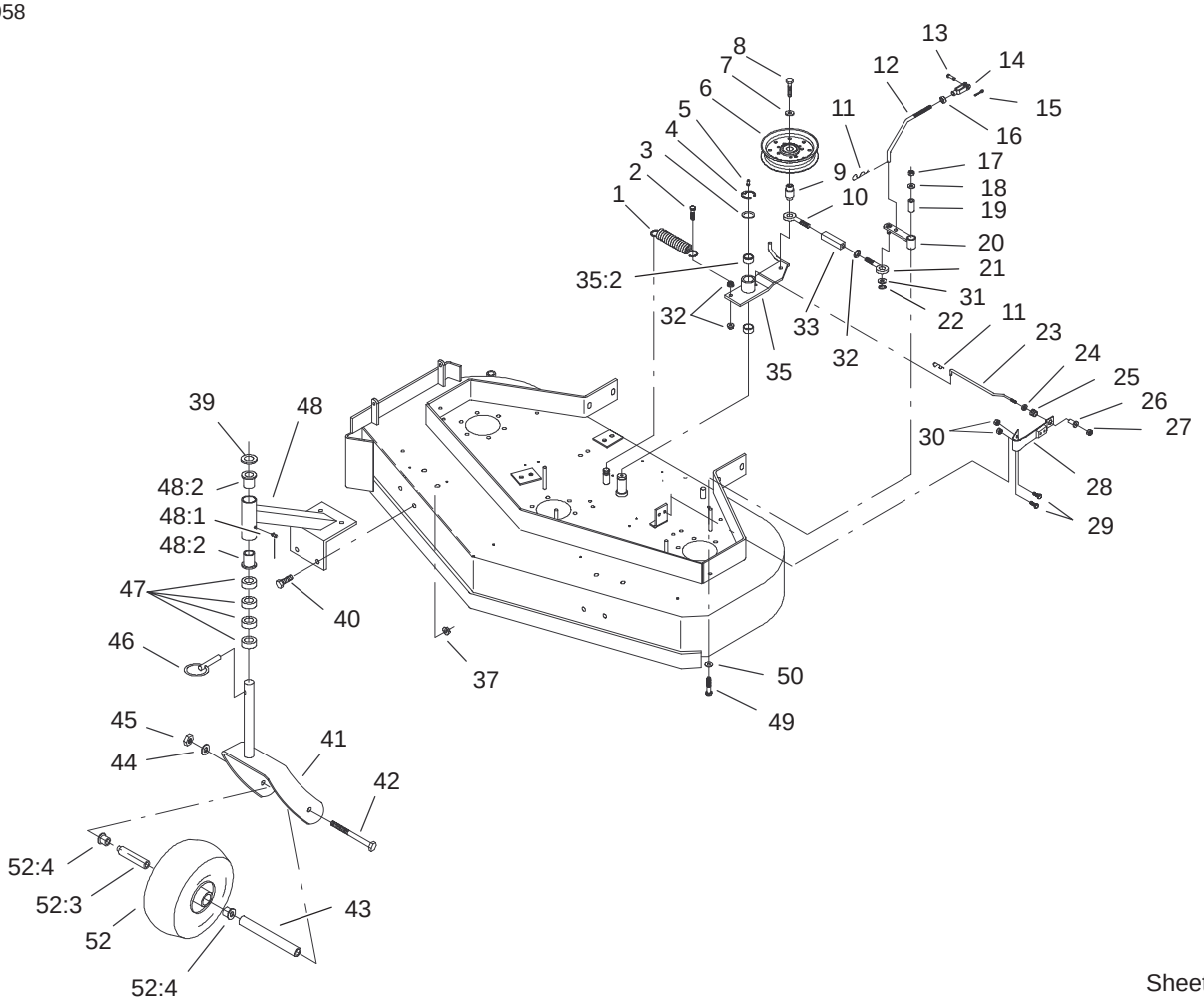


Sheet No.:12

# Front Castor, Belt Tension, and Blade Brake System Assembly (Continued)

| Ref. No. | Part No. | Qty. | Description |
|---|---|---|---|
| 49 | 322–10 | 1 | Screw–HH |
| 50 | 1–303334 | 1 | Washer–Spring |
| 52 | 1–513648 | 2 | Wheel And Tire ASM |
| 52:3 | 1–513809 | 1 | Bearing |
| 52:4 | 1–513810 | 2 | Bushing |

| Ref. No. | Part No. | Qty. | Description |
|---|---|---|---|

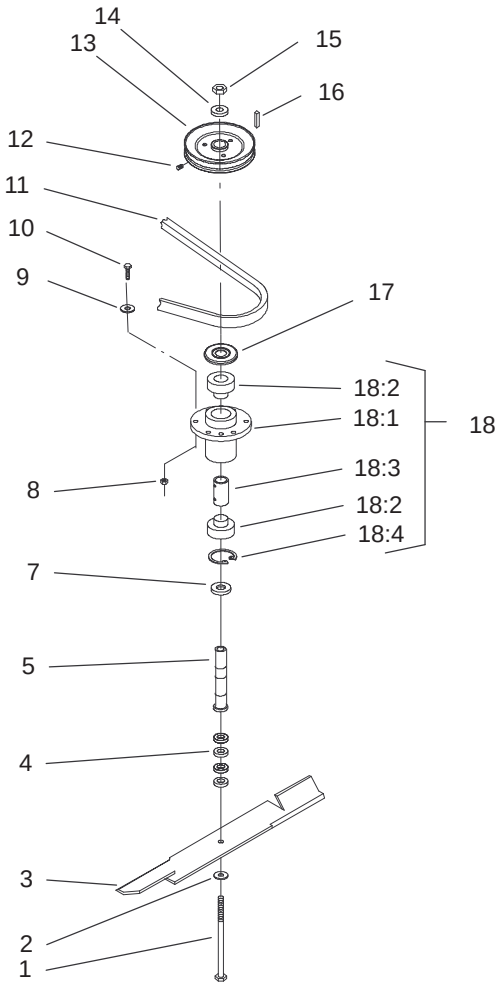


Sheet No.:13

# Spindle, Blade and Belt Assembly

| Ref. No. | Part No. | Qty. | Description |
|---|---|---|---|
| 1 | 1–800861 | 2 | Screw–Cap, HH |
| 2 | 1–513208 | 2 | Washer–Spring |
| 3 | 103–2528 | 2 | Blade–Notched |
| 3 | 103–2508 | 2 | Blade–Low Lift |
| 4 | 1–323539 | 8 | Spacer–Drive, Blade |
| 5 | 1–323529 | 2 | Tube–Spindle, Short |
| 7 | 103–2535 | 2 | Spacer–Guard, Bottom |
| 8 | 32128–20 | 8 | Nut–HF |
| 9 | 1–303334 | 8 | Washer–Spring |
| 10 | 322–6 | 8 | Screw–HH |
| 11 | 106–2741 | 1 | V–Belt |
| 12 | 1–803310 | 2 | Screw–Set |
| 13 | 1–403183 | 2 | Sheave |
| 14 | 1–323339 | 2 | Washer–Retainer, Sheave |
| 15 | 3219–6 | 2 | Nut–Hex |
| 16 | 1–807267 | 2 | Key |
| 17 | 103–1330 | 2 | Guard–Bearing, Top |
| 18 | 103–2533 | 2 | Cutter Housing ASM |
| 18:1 | 1–323532 | 1 | Housing–Spindle |
| 18:2 | 103–2477 | 2 | Bearing–Ball |
| 18:3 | 103–2534 | 1 | Spacer–Bearing |
| 18:4 | 32120–8 | 1 | Ring–Snap |

| Ref. No. | Part No. | Qty. | Description |
|---|---|---|---|

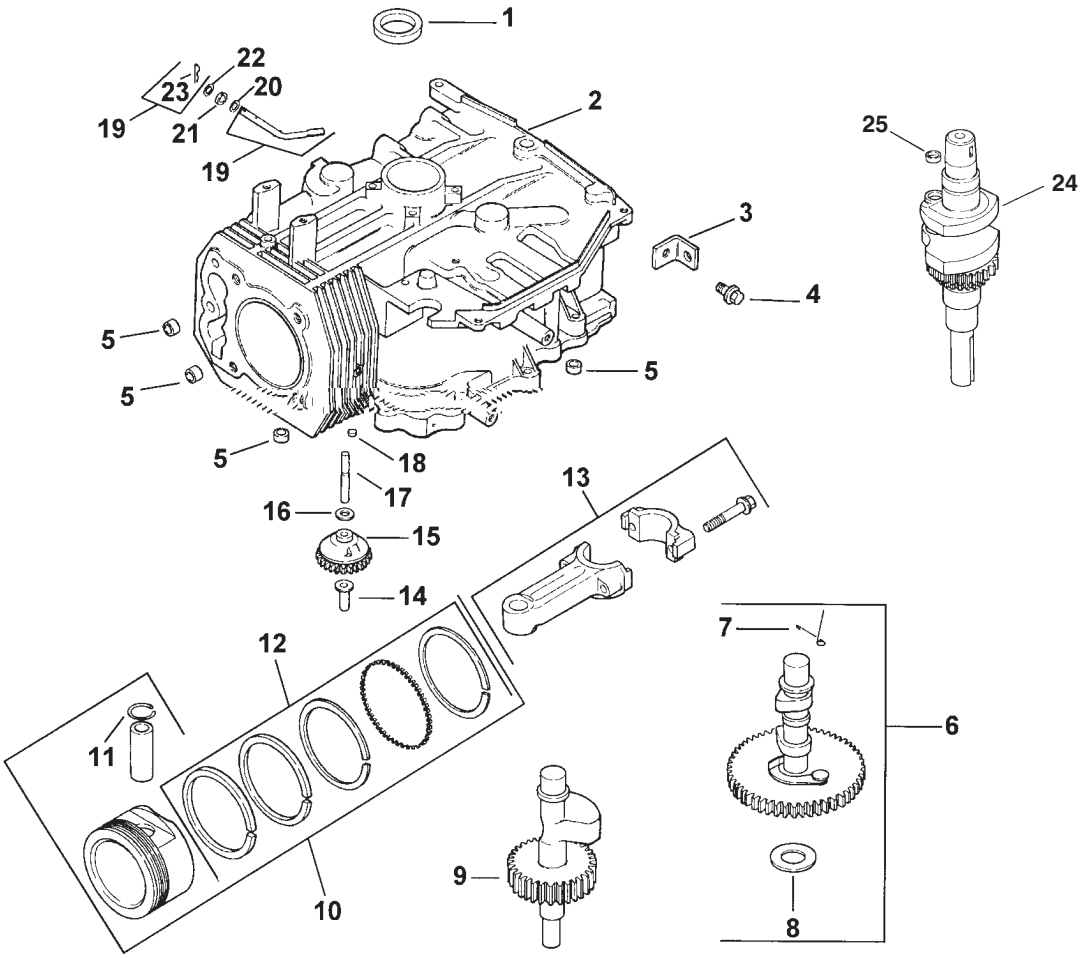


# Crankcase Assembly
# Kohler Model CV15T–41608

| Ref. No. | Part No. | Qty. | Description |
|---|---|---|---|
| 1 | 12 032 03–S | 1 | Seal–Crankshaft |
| 2 | 12 522 18–S | 1 | Shortblock |
| 3 | 12 445 02–S | 1 | Strap–Lifting |
| 4 | M–839025–S | 1 | Screw–HF M8x1.25x25 |
| 5 | 24 380 13–S | 4 | Dowel–Locating |
| 6 | 12 755 49–S | 1 | Kit–Camshaft (Incl.7–8) |
| 7 | 12 089 31–S | 1 | Spring–Actuating |
| 8 | 12 422 07–S | A/R | Shim–Camshaft, White |
| 8 | 12 422 08–S | 1 | Shim–Camshaft, Blue |
| 8 | 12 422 09–S | A/R | Shim–Camshaft, Red |
| 8 | 12 422 10–S | A/R | Shim–Camshaft,Yellow |
| 8 | 12 422 11–S | A/R | Shim–Camshaft, Green |
| 8 | 12 422 12–S | A/R | Shim–Camshaft, Gray |
| 8 | 12 422 13–S | A/R | Shim–Camshaft, Black |
| 9 | 12 144 27–S | 1 | Shaft–Balance |
| 10 | 12 874 07–S | 1 | Piston w/Ring Set STD (Incl. 11,12) |
| 10 | 12 874 08–S | 1 | Set–Piston w/Ring .25 |
| 10 | 12 874 09–S | 1 | Set–Piston w/Ring .50 |
| 10 | 12 874 11–S | 1 | Set–Piston w/Ring .08 |
| 11 | 12 018 02–S | 2 | Retainer–Piston Pin |
| 12 | 12 108 07–S | 1 | Ring Set STD |
| 12 | 12 108 08–S | 1 | Ring Set .25 |
| 12 | 12 108 09–S | 1 | Ring Set .50 |

| Ref. No. | Part No. | Qty. | Description |
|---|---|---|---|
| 13 | 12 067 05–S | 1 | Rod–Connecting, STD |
| 13 | 12 067 06–S | 1 | Rod–Connecting .25 |
| 14 | 12 380 01–S | 1 | Pin–Governor Regulating |
| 15 | 12 043 05–S | 1 | Gear–Governor |
| 16 | M–631005–S | 1 | Washer–Plain, 6mm |
| 17 | 12 144 02–S | 1 | Shaft–Governor Gear |
| 18 | 52 139 09–S | 1 | Plug–Cup |
| 19 | 12 755 64–S | 1 | Kit–Governor Cross Shaft (Incl. 23) |
| 20 | X–25–102–S | 1 | Washer–Plain, 1/4 |
| 21 | 12 032 01–S | 1 | Seal–Governor Cross Shaft |
| 22 | M–631015–S | 1 | Washer–Plain, 6mm |
| 23 | 12 154 05–S | 1 | Clip–Hitch Pin |
| 24 | 12 014 30–S | 1 | Crankshaft ASM (Incl. 25) |
| 25 | 12 139 01–S | 1 | Plug–Cup |
| * | 12 755 93–S | 1 | Set–Gasket |

* Not illustrated
Order Parts from Kohler

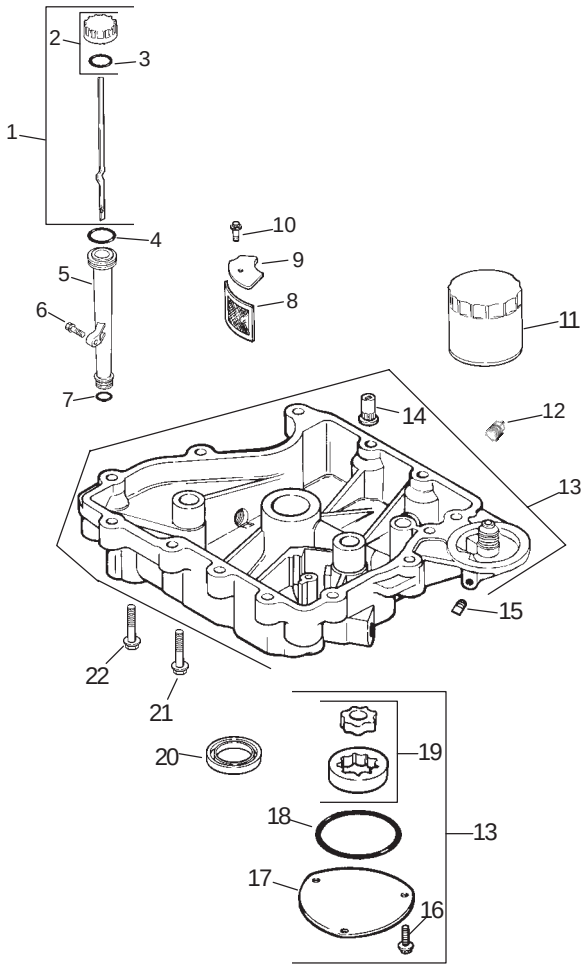


# Oil Pan and Lubrication Assembly
# Kohler Model CV15T–41608

| Ref. No. | Part No. | Qty. | Description |
|---|---|---|---|
| 1 | 12 038 01–S | 1 | Dipstick ASM(Incl. 2–3) |
| 2 | 25 755 13–S | 1 | Kit–Oil Fill Cap (Incl. 3) |
| 3 | 12 153 03–S | 1 | O Ring–Dipstick |
| 4 | 12 153 02–S | 1 | O Ring–Upper Oil Fill Tube |
| 5 | 12 123 04–S | 1 | Tube–Oil Fill |
| 6 | M–545020–S | 1 | Screw–HF, M5x0.8x20 |
| 7 | 12 153 01–S | 1 | O Ring–Lower Oil Fill Tube |
| 8 | 25 162 07–S | 1 | Screen–Oil Pickup |
| 9 | 12 096 03–S | 1 | Cover–Oil Pickup Screen |
| 10 | M–545016–S | 1 | Screw–HF, M5x0.8x16 |
| 11 | 52 050 02–S | 1 | Filter–Oil |
| 12 | 25 139 57–S | 1 | Plug–Pipe, 3/8 SH |
| 13 | 12 199 50–S | 1 | Oil Pan ASM (Incl.14, 16–19) |
| 14 | 25 462 09–S | 1 | Valve–Oil Pressure Relief |
| 15 | 25 139 52–S | 1 | Plug–Pipe,1/8 |
| 16 | M–545016–S | 3 | Screw–HF, M5x0.8x16 |
| 17 | 12 096 34–S | 1 | Cover–Oil Pump |
| 18 | 12 153 06–S | 1 | O Ring–Oil Pump Cover |

| Ref. No. | Part No. | Qty. | Description |
|---|---|---|---|
| 19 | 12 393 01–S | 1 | Pump–Oil |
| 20 | 12 032 03–S | 1 | Seal–Oil (PTO End) |
| 21 | 24 086 16–S | 11 | Screw–HF, M8x1.25x45 |
| 22 | 24 086 17–S | 1 | Screw–HF, M8x1.25x45 |

Order Parts From Kohler

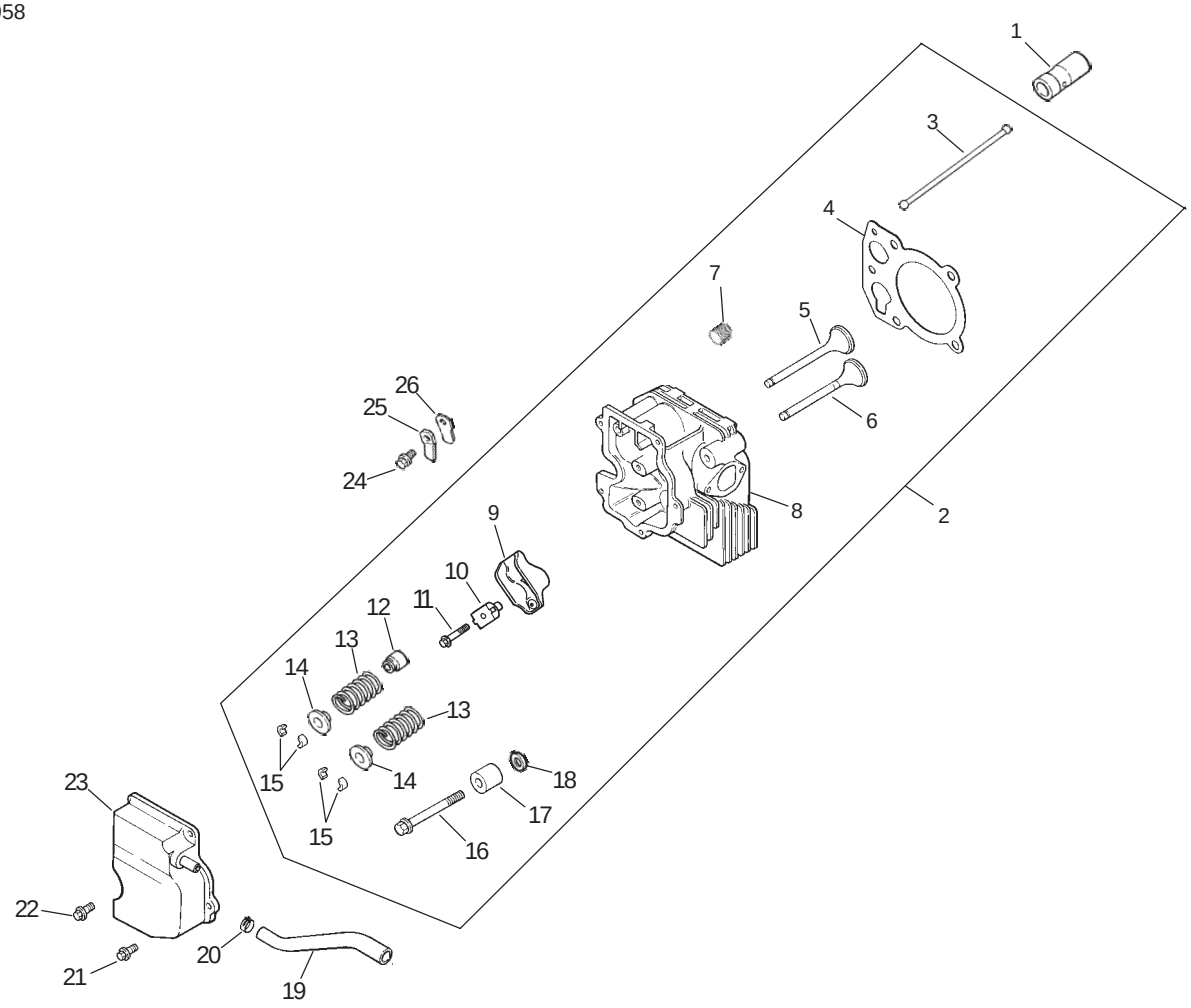


# Cylinder Head, Valve and Breather Assembly
# Kohler Model CV15T–41608

| Ref. No. | Part No. | Qty. | Description |
|---|---|---|---|
| 1 | 12 351 01–S | 2 | Lifter–Valve |
| 2 | 12 755 81–S | 1 | Kit–Cylinder Head (Incl. 3–13, 18–21, 25, Carburator Gasket 12 041 01–S(2), Exaust Manifold Gasket 12 041 03–S, Air Cleaner Gasket 12 041 02–S) |
| 3 | 12 411 01–S | 2 | Rod–Push |
| 4 | 12 041 10–S | 1 | Gasket–Cylinder Head |
| 5 | 12 017 01–S | 1 | Valve–Intake STD |
| 5 | 12 017 02–S | 1 | Valve–Intake .25 |
| 6 | 12 016 01–S | 1 | Valve–Exhaust STD |
| 6 | 12 016 02–S | 1 | Valve–Exhaust, .25 |
| 7 | 25 139 60–S | 1 | Plug–Pipe, HSH 1/8 |
| 8 | 12 318 19–S | 1 | Head – Cylinder |
| 9 | 25 186 01–S | 2 | Arm–Rocker |
| 10 | 12 599 03–S | 2 | Pivot–Rocker Arm |
| 11 | M–640034–S | 2 | Screw–HF M6x1.0x34 |
| 12 | 24 032 05–S | 1 | Seal–Valve Stem |
| 13 | 12 089 01–S | 2 | Spring–Valve |
| 14 | 12 173 01–S | 2 | Cap–Valve Spring |
| 15 | 12 755 03–S | 2 | Kit–Retainer |

| Ref. No. | Part No. | Qty. | Description |
|---|---|---|---|
| 16 | 12 086 15–S | 5 | Screw–HF M10x1.5x81 |
| 17 | 12 112 13–S | 1 | Spacer–Head Bolt Exhaust Port |
| 18 | 12 468 05–S | 1 | Washer–Plain 13/32 |
| 19 | 12 326 03–S | 1 | Hose–Breather |
| 20 | 25 237 14–S | 2 | Clamp–Hose |
| 21 | M–645020–S | 3 | Screw–HF M6x1.0x20 |
| 22 | M–640034–S | 2 | Screw–HF M6x1.0x34 |
| 23 | 12 096 07–S | 1 | Cover–Valve w/Nipple |
| 24 | M–545010–S | 1 | Screw–HF M5x0.8x10 |
| 25 | 12 018 01–S | 1 | Retainer–Breather Reed |
| 26 | 12 402 02–S | 1 | Reed–Breather |

Order Parts from Kohler

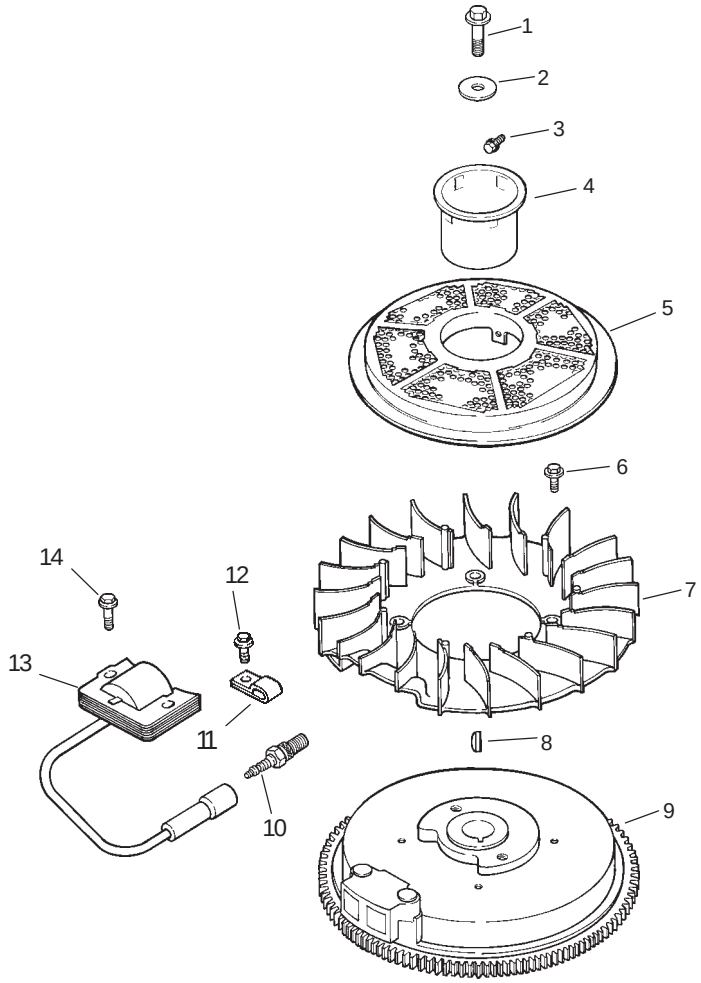


# Ignition and Electrical Assembly
# Kohler Model CV15T–41608

| Ref. No. | Part No. | Qty. | Description |
|---|---|---|---|
| 1 | 12 086 14–S | 1 | Screw–HF,M10x1.5x46 |
| 2 | 12 468 03–S | 1 | Washer–Plain, 3/8 |
| 3 | M–545010–S | 3 | Screw–HF,M5x0.8x10 |
| 4 | 12 109 07–S | 1 | Cup–Drive, Starter |
| 5 | 12 162 09–S | 1 | Screen–Grass |
| 6 | 25 086 47–S | 4 | Bolt–Shoulder |
| 7 | 12 157 03–S | 4 | Fan |
| 8 | X–42–15–S | 1 | Key |
| 9 | 12 025 31–S | 1 | Flywheel |
| 8 | 12 403 01–S | 1 | Rectifier–Unregulated, 15 amp |
| 9 | X–22–11–S | 2 | Washer – Lock |
| 10 | 12 132 06–S | 1 | Spark Plug |

| Ref. No. | Part No. | Qty. | Description |
|---|---|---|---|
| 11 | X–728–1–S | 2 | Clip–Cable |
| 10 | M–639016–S | 2 | Screw–HF, M6x1.0x16 |
| 11 | 41 155 03–S | 1 | Connector |
| 12 | M–545010–S | 2 | Screw–HF, M5x0.8x10 |
| 13 | 12 584 05–S | 1 | Module–Ignition |
| 13 | M–548025–S | 2 | Screw–HH M5x0.8x25 |
| 14 | M–545020–S | 2 | Screw–HF, M5x0.8x20 |
| * | 25 518 05–S | 1 | Lead–Black, Rectifier/ Regulator,(5”–14Gauge Uninsulated Push On Tab Terminals) |
| * | 12 454 03–S | 1 | Tie–Wire |

* Not illustrated
Order Parts From Kohler

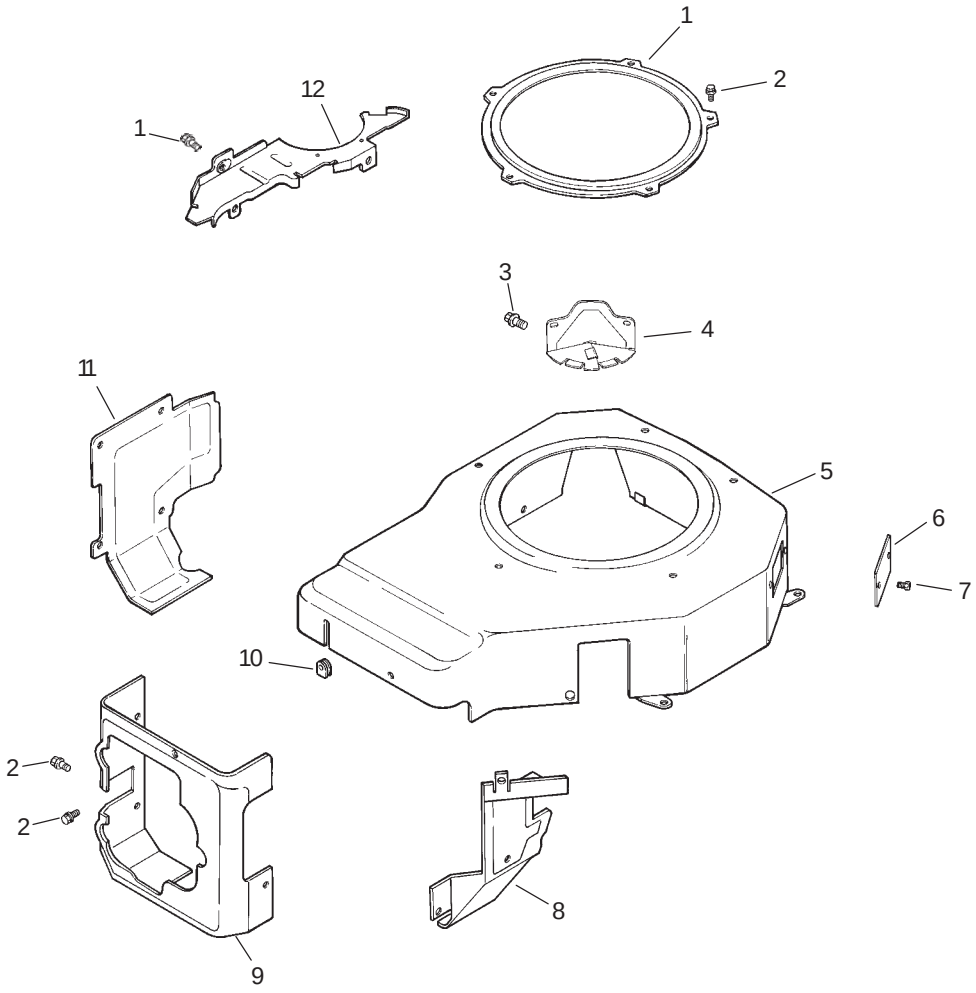


# Blower Housing And Baffle Assembly
# Kohler Model CV15T–41608

| Ref. No. | Part No. | Qty. | Description |
|---|---|---|---|
| 1 | 12 314 10 S | 1 | Guard–Grass Screen |
| 2 | M–545010–S | 9 | Screw–HF, M5x0.8x10 |
| 3 | M–550010–S | 6 | Screw–HF, M5x0.8x10 |
| 4 | 12 096 29–S | 1 | Cover–Starter |
| 5 | 12 027 53–S | 1 | Housing–Blower |
| 6 | 12 096 27–S | 1 | Cover–Rectifier/ Regulator |
| 7 | M–6390 16–S | 2 | Screw–HF, M6x1.0x16 |
| 8 | 12 063 10–S | 1 | Baffle–Intake, Side |
| 9 | 12 063 08–S | 1 | Baffle–Cylinder Head |
| 10 | 12 313 03–S | 1 | Grommet–Spark Plug leads |
| 11 | 12 063 19–S | 1 | Baffle–Cylinder |
| 12 | 12 146 07–S | 1 | Plate–Blower Housing |
| * | 12 113 112–S | 1 | Decal–Hoursepower |

| Ref. No. | Part No. | Qty. | Description |
|---|---|---|---|

* Not illustrated
Order Parts From Kohler

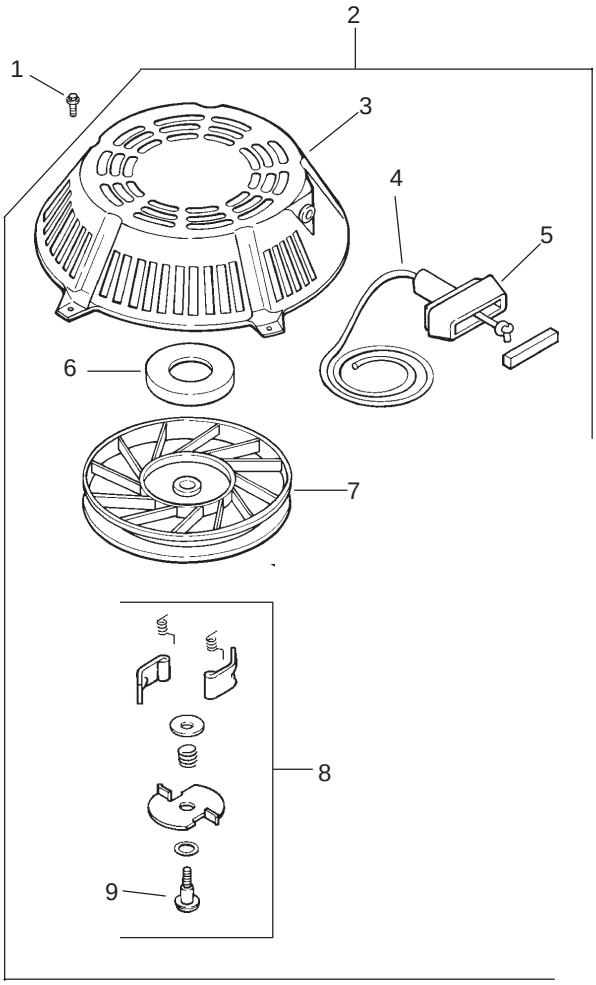


# Starter Assembly
# Kohler Model CV15T–41608

| Ref. No. | Part No. | Qty. | Description |
|---|---|---|---|
| 1 | M–550010–S | 5 | Screw–HF, M5x0.8x10 |
| 2 | 12 165 01–S | 1 | Starter ASM Retractable (Incl. 3–9) |
| 3 | 12 081 01–S | 1 | Housing–Starter |
| 4 | 12 160 01–S | 1 | Rope–Starter |
| 5 | 25 166 01–S | 1 | Handle–Recoil |
| 6 | 12 089 06–S | 1 | Spring & Keeper |
| 7 | 12 093 01–S | 1 | Pulley |
| 8 | 12 757 06–S | 1 | Kit–Dog Repair (incl. 9) |
| 9 | 41 086 09–S | 1 | Screw–Posidrive |
| * | 12 113 07–S | 1 | Decal–Starting |

| Ref. No. | Part No. | Qty. | Description |
|---|---|---|---|

* Not illustrated
Order Parts From Kohler

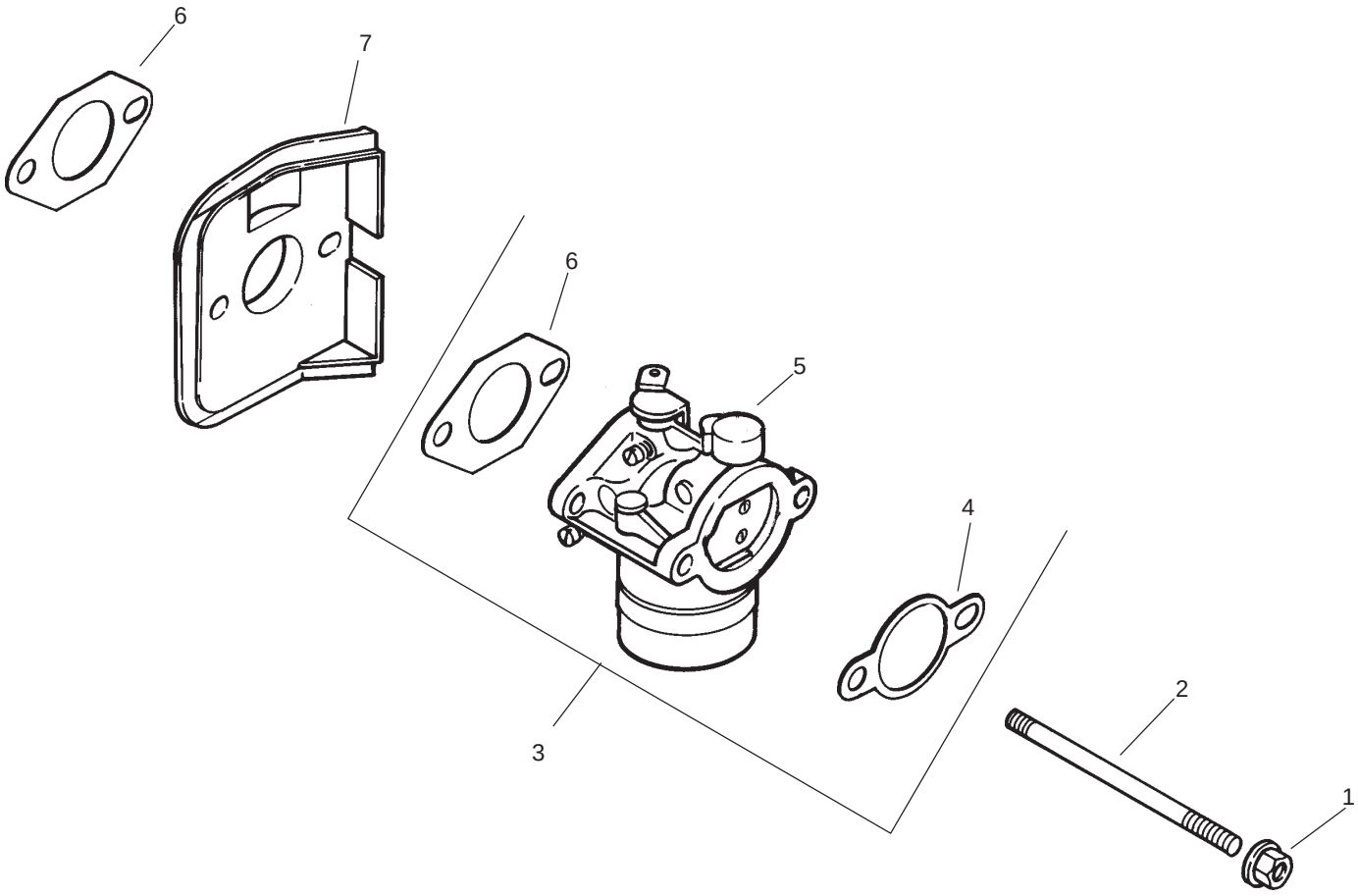


# Fuel System Assembly
# Kohler Model CV15T–41608

| Ref. No. | Part No. | Qty. | Description |
|---|---|---|---|
| 1 | M–641060–S | 2 | Nut–HF M6x1.0 |
| 2 | M–629116–S | 2 | Stud M6x1.0x116 |
| 3 | 12 853 80–S | 1 | Kit–Carburetor w/Gaskets (Incl. 4–6) |
| 4 | 12 041 02–S | 1 | Gasket–Air Cleaner |
| 5 | 12 053 80 | 1 | Carburetor ASM (For Information Only Not Available Separately) (Service With Kits 12 757 02–S Float Kit 12 757 03–S Carb. Repair Kit and 12 757 08–S Choke Repair Kit) |
| 6 | 12 041 01–S | 2 | Gasket–Carburetor |
| 7 | 12 265 04–S | 1 | Deflector–Heat |
| 8 | 47 154 01–S | 1 | Clip–Cable |
| * | 12 757 02–S | 1 | Kit–Float |
| * | 12 757 08–S | 1 | Kit–Choke Repair |
| * | 12 757 03–S | 1 | Kit–Carburetor Repair |
| * | 12 755 92–S | 1 | Kit–High Altitude with Gaskets |

| Ref. No. | Part No. | Qty. | Description |
|---|---|---|---|

* Not illustrated
Order Parts From Kohler

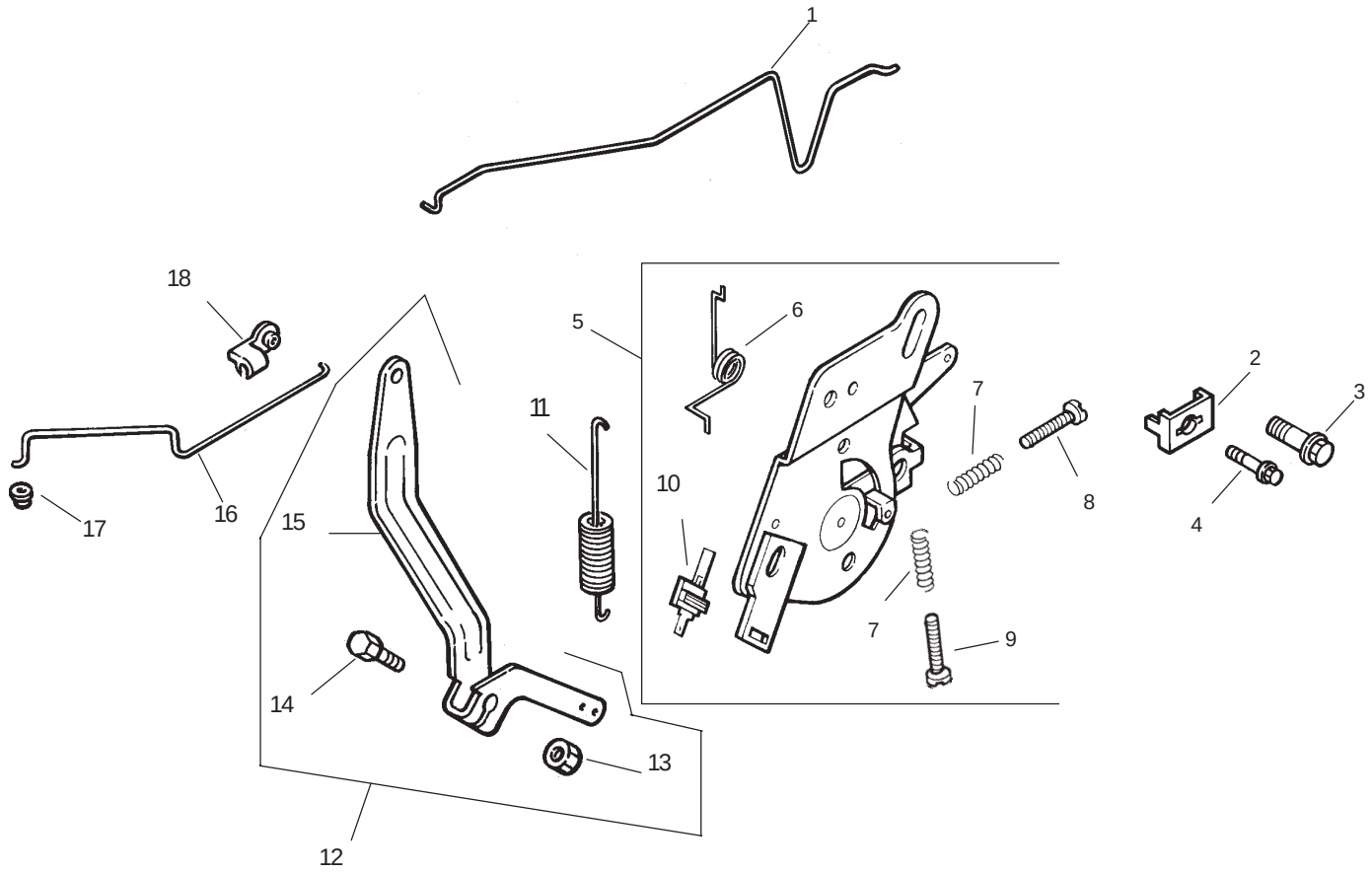


# Engine Controls Assembly
# Kohler Model CV15T–41608

| Ref. No. | Part No. | Qty. | Description |
|---|---|---|---|
| 1 | 12 079 07–S | 1 | Linkage–Choke |
| 2 | 12 237 01–S | 1 | Clamp–Cable |
| 3 | M–664020–S | 2 | Screw–Lobed Socket M6x1.0x20 |
| 4 | M–545016–S | 1 | Screw–HF M5x .08x16 |
| 5 | 12 536 06–S | 1 | Control–Speed ASM |
| 6 | 12 089 23–S | 1 | Spring–Choke Return (Incl. 6–10) |
| 7 | 12 089 11–S | 2 | Spring–Speed Control |
| 8 | 12 086 38–S | 1 | Screw–Pan Hd with Loctite |
| 9 | M–443020–S | 1 | Screw–SPH, M4x0.7x20 |
| 10 | 25 452 14 | 1 | Terminal–Kill Switch |
| 11 | 12 089 19–S | 1 | Spring–Governor |
| ‘12 | 12 755 83–S | 1 | Kit – Governor Lever (Incl. 13–15) |
| 13 | 12 100 07–S | 1 | Nut–HF |
| 14 | 52 211 04–S | 1 | Bolt–Round HD |
| 15 | 12 090 28–S | 1 | Lever–Governor |
| 16 | 12 079 01–S | 1 | Linkage–Throttle |
| 17 | 25 158 08–S | 1 | Bushing–Linkage Retaining |

| Ref. No. | Part No. | Qty. | Description |
|---|---|---|---|
| 18 | 25 158 11–S | 1 | Bushing–Throttle Linkage |

Order Parts From Kohler

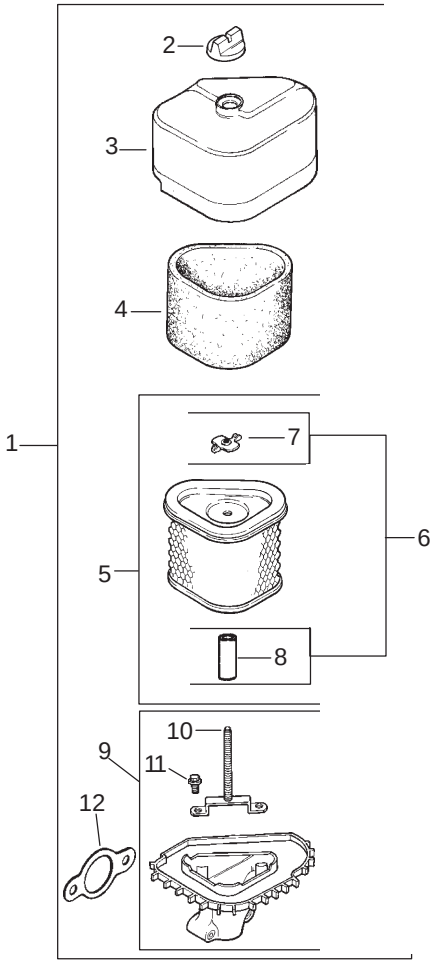


# Air Cleaner Assembly
# Kohler Model CV15T–41608

| Ref. No. | Part No. | Qty. | Description |
|---|---|---|---|
| 1 | 12 743 02–S | 1 | Kit–Air Cleaner (Incl. 2–12) |
| 2 | 25 341 03–S | 1 | Knob–Air Cleaner Cover |
| 3 | 12 096 38–S | 1 | Cover–Air Cleaner |
| 4 | 12 083 12–S | 1 | Element–Precleaner |
| 5 | 12 083 10–S | 1 | Element–Air Cleaner (Incl. 6–8) |
| 6 | 12 743 12–S | 1 | Kit–Seal (Incl. 7–8) |
| 7 | 12 100 08–S | 1 | Nut–Wing |
| 8 | 12 032 11–S | 1 | Seal |
| 9 | 12 094 07–S | 1 | Base–Air Cleaner (Incl. 10,11) |
| 10 | 12 072 04–S | 1 | Stud–M6x1.0x66 |
| 11 | 12 086 01–S | 2 | Screw–#10 Hi–Lo Thread Forming |
| 12 | 12 041 02–S | 1 | Gasket–Air Cleaner |
| * | 12 113 04–S | 1 | Decal–Air Cleaner |

| Ref. No. | Part No. | Qty. | Description |
|---|---|---|---|

* Not illustrated
Order Parts From Kohler

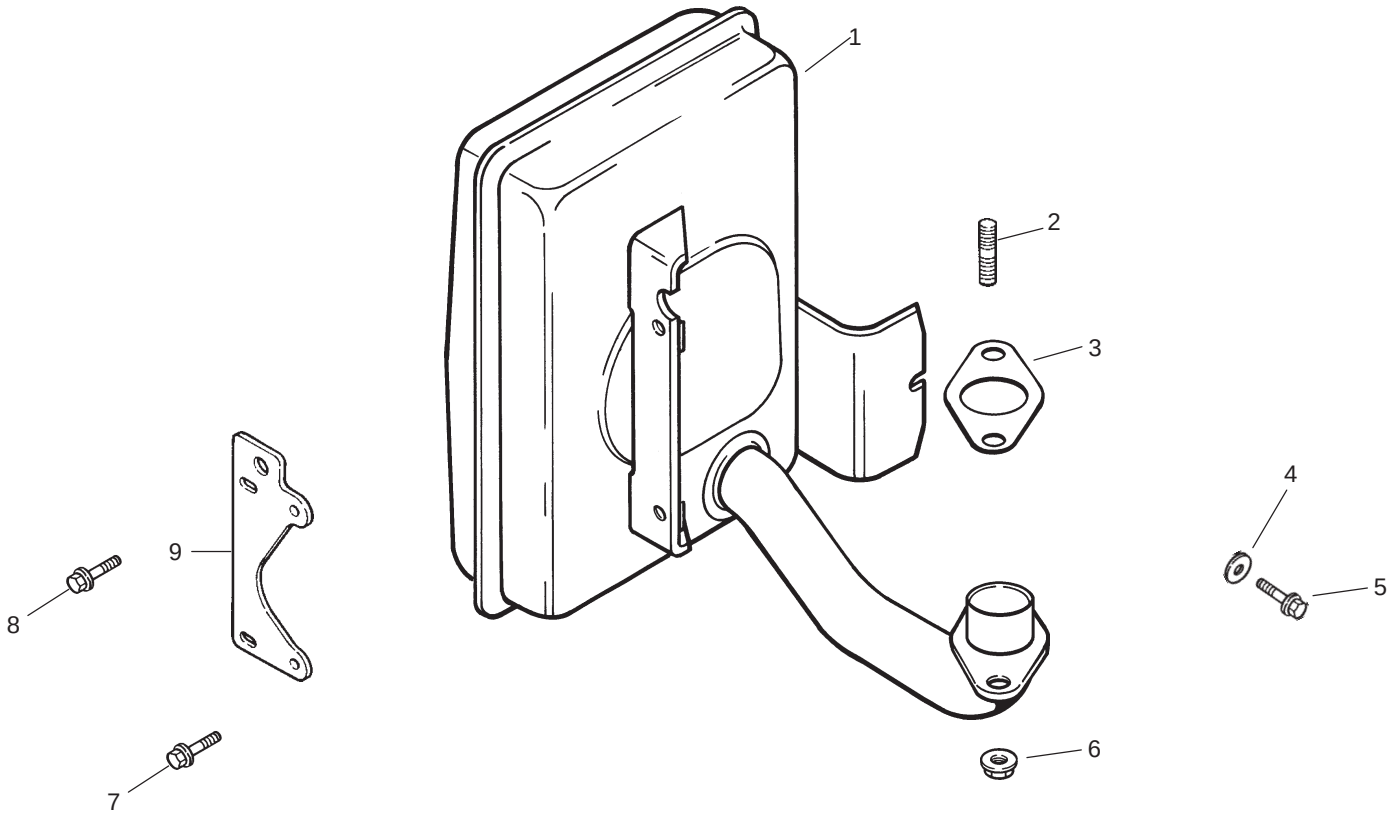


# Exhaust Assembly
# Kohler Model CV15T–41608

| Ref. No. | Part No. | Qty. | Description |
|---|---|---|---|
| 1 | 12 068 44–S | 1 | Muffler |
| 2 | 25 072 04–S | 2 | Stud M8x1.25x33 |
| 3 | 12 041 03–S | 1 | Gasket–Exhaust Manifold |
| 4 | X–25–78–S | 1 | Washer–Plain,1/4 |
| 5 | M–545016–S | 1 | Screw–HF, M5x0.8x16 |
| 6 | M–841080–S | 2 | Nut–HF, M8x1.25 |
| 7 | M–645016–S | 2 | Screw–HF, M6x1.0x16 |
| 8 | M–645025–S | 2 | Screw–HF, M6x1.0x25 |
| 9 | 12 126 71–S | 1 | Bracket–Muffler |
| * | 12 112 20–S | 2 | Spacer |

| Ref. No. | Part No. | Qty. | Description |
|---|---|---|---|

* Not illustrated
Obtain Parts From Kohler

# Maintenance Record

| Date | | | | | | | | |
|---|---|---|---|---|---|---|---|---|
| | | | | | | | | |
| | | | | | | | | |
| | | | | | | | | |
| | | | | | | | | |
| | | | | | | | | |
| | | | | | | | | |
| | | | | | | | | |
| | | | | | | | | |
| | | | | | | | | |
| | | | | | | | | |
| | | | | | | | | |
| | | | | | | | | |
| | | | | | | | | |
| | | | | | | | | |
| | | | | | | | | |
| | | | | | | | | |
| | | | | | | | | |
| | | | | | | | | |
| | | | | | | | | |
| | | | | | | | | |
| | | | | | | | | |
| | | | | | | | | |
| | | | | | | | | |
| | | | | | | | | |
| | | | | | | | | |
| | | | | | | | | |
| | | | | | | | | |
| | | | | | | | | |
| | | | | | | | | |
| | | | | | | | | |
| | | | | | | | | |

# Maintenance Record

| Date | | | | | | | | |
|---|---|---|---|---|---|---|---|---|
| | | | | | | | | |
| | | | | | | | | |
| | | | | | | | | |
| | | | | | | | | |
| | | | | | | | | |
| | | | | | | | | |
| | | | | | | | | |
| | | | | | | | | |
| | | | | | | | | |
| | | | | | | | | |
| | | | | | | | | |
| | | | | | | | | |
| | | | | | | | | |
| | | | | | | | | |
| | | | | | | | | |
| | | | | | | | | |
| | | | | | | | | |
| | | | | | | | | |
| | | | | | | | | |
| | | | | | | | | |
| | | | | | | | | |
| | | | | | | | | |
| | | | | | | | | |
| | | | | | | | | |
| | | | | | | | | |
| | | | | | | | | |
| | | | | | | | | |
| | | | | | | | | |
| | | | | | | | | |
| | | | | | | | | |


TORO®