Form No. 3328–961

Mid–Size Mower

ProLine Pistol Grip Gear 12.5hp with 32in Side Discharge Mower

Model No. 30520—230005001 and Up

Parts Catalog

Ordering Replacement Parts

To order replacement parts, please supply: the part number, the quantity, and the description of each part desired.

Understanding Reference Numbers

Each identified part in an illustration has a reference number. The reference number for a part also appears in the parts list, along with other information about the part.

This catalog uses two special reference number formats, one to indicate parts in a service assembly and another to indicate the quantity of a given part in an illustration.

Service Assembly Reference Numbers

Parts in service assemblies have reference numbers in the form **a:b.** The **a** represents the reference number of the entire service assembly and the **b** represents a sequential number unique to each part within the service assembly.

For example, a wheel assembly might be identified by reference number **6**, the tire by **6:1**, the valve by **6:2**, and the wheel by **6:3**. When you order the assembly identified by reference number 6, you receive all parts identified by reference numbers 6:1, 6:2, and 6:3. However, you may also order any part individually.

Reference numbers of this type appear in illustrations and in part lists.

Reference Numbers Indicating Quantity

In an illustration, if a reference number indicates more than one part, the reference number has the form **nX y.** The **n** represents the quantity of the part, the **X** is the multiplication symbol, and the **y** represents the reference number.

For example, in an illustration, the reference number **2X 37** means that two of the parts identified by reference number 37 are indicated.

© The TORO Company — 2003
All Rights Reserved

Contents

Description	Page
Engine and Fuel System Assembly	3
Transmission and Drive Pulley Assembly	4
Wheel Drive Assembly	6
Upper Handle Assembly	7
Handle Assembly No. 106–2719	8
Deck Assembly	9
Front Caster and Blade Brake Assembly	10
Spindle Assembly	12
Crankcase Assembly Kawasaki FB460V–MS14	13
Piston/Crankshaft Crankcase Assembly Kawasaki FB460V–MS14	14
Valve/Camshaft Assembly Kawasaki FB460V–MS14	15
Lubrication Equipment Assembly Kawasaki FB460V–MS14	16
Cooling Equipment Assembly Kawasaki FB460V–MS14	17
Electric Equipment Assembly Kawasaki FB460V–MS14	18
Control Equipment Assembly Kawasaki FB460V–MS14	19
Carburetor Assembly Kawasaki FB460V–MS14	20
Air Filter Assembly Kawasaki FB460V–MS14	22
Starter Assembly Kawasaki FB460V–MS14	23
Starter Assembly Kawasaki FB460V–MS14	24
Muffler Assembly Kawasaki FB460V–MS14	25

Accessories

Description	Model / Part No.
Recycler Kit	30142
Atomic Blade	104–8595
Soft Bagger	30198
Lowsail Blade	103–2507

Part Description Abbreviations

Part descriptions in this catalog may include the following abbreviations.

Abbreviation	Meaning
AR	as required
ASM	assembly
CARR	carriage
DEG	degrees
FH	flat head
GA	gauge
HF	hex flange
HH	hex head
HHF	hex head flange
HLH	hex lag head
HJ	hex jam
HOC	height-of-cut
HS	hex socket
HSBH	hex socket button head
HSFH	hex socket flat head
HSH	hex socket head
HWH	hex washer head
HWHTF	hex washer head thread forming
HYD	hydraulic
INC	incorporated
LH	left hand
NI	nylon insert
PPH	Phillips pan head
PTH	Phillips truss head
PTO	power take off
RH	right hand
SFH	slotted fillister head
SHH	slotted hex head
SQH	square head
SHWH	slotted hex washer head
SPH	slotted pan head
SRH	slotted round head
STD	standard
TAP	self tapping
TTH	Torx truss head
WH	wing head

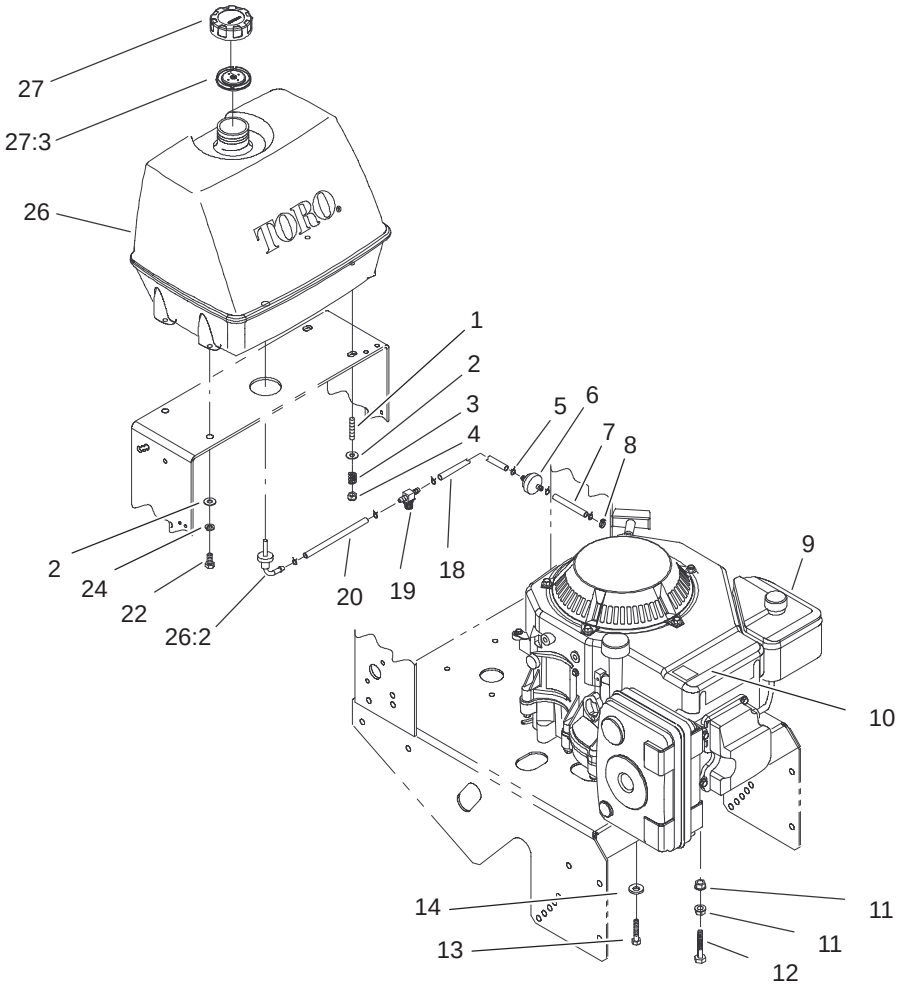

Sheet No.: 2

Engine and Fuel System Assembly

Ref. No.	Part No.	Qty.	Description
1	1–633023	2	Stud
2	3256–23	4	Washer–Flat
3	1–633349	2	Spring–Tank, Fuel
4	3296–47	2	Nut–Lock, NI
5	1–303077	5	Clamp
6	1–303197	1	Filter–Fuel
7	1–603776	1	Hose–Line, Fuel
8	1–303308	1	Clamp–Hose
☆9		1	Engine–Kawasaki, Fb460v–Ms14
10	63–8440	1	Decal–Surface, Hot
11	3290–357	2	Nut–HHF
12	323–13	1	Screw–HH
13	33114–025	4	Screw–HH
14	1–303334	4	Washer–Spring
18	1–303022	1	Hose–Fuel
19	1–603770	1	Valve–Fuel
20	1–603955	1	Hose–Fuel
22	322–3	2	Screw–HH
24	1–805005	2	Washer–Lock
26	106–0730	1	Fuel Tank ASM
26:2	103–2605	1	Fitting–Fuel, Bulkhead
27	88–3980	1	Gas Cap ASM
27:3	88–4010	1	Gasket–Cap, Gas
*99	1–303335	1	Tie–Plastic

Ref. No.	Part No.	Qty.	Description

☆ Not serviced separately
* Not illustrated

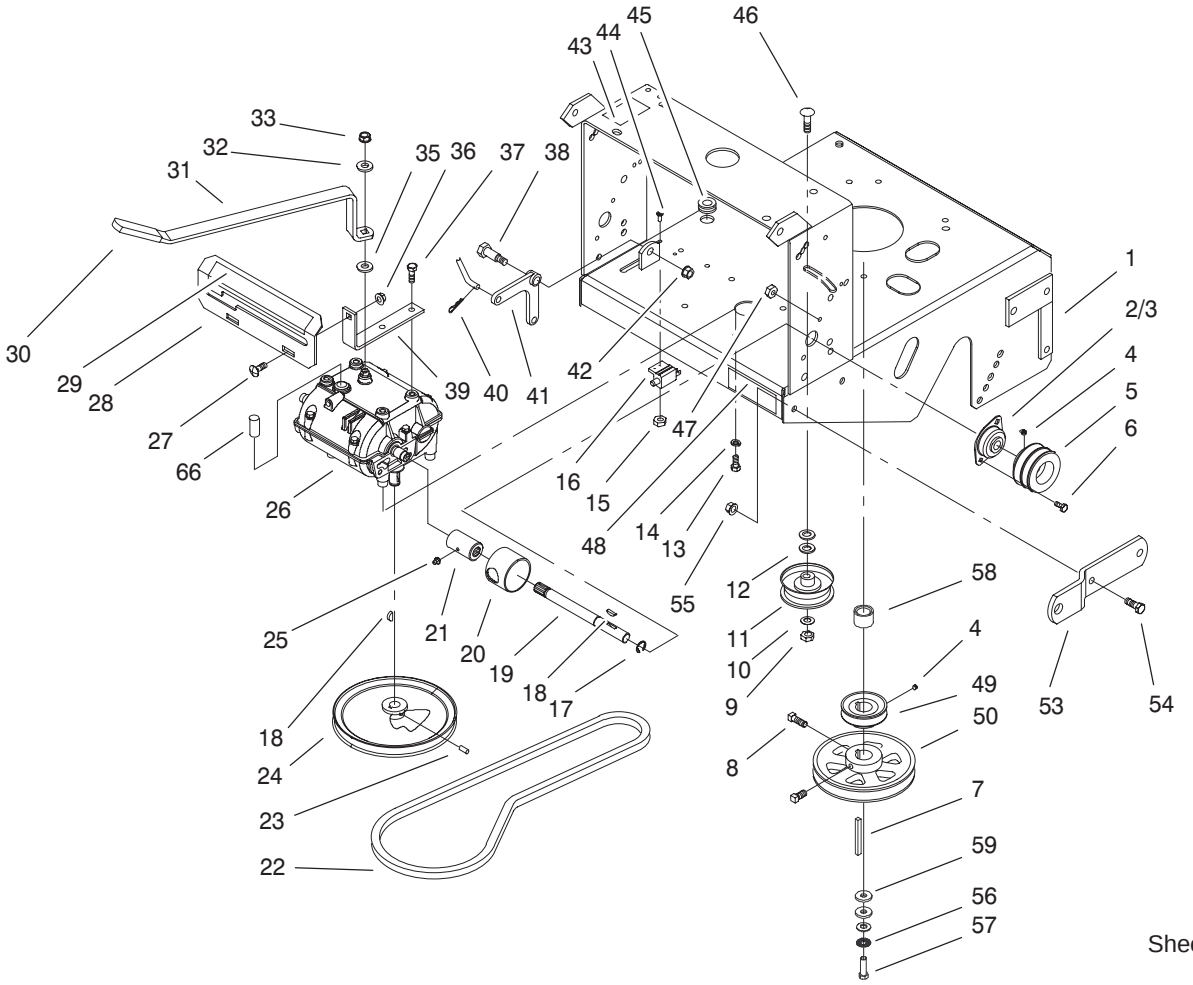

Sheet No.: 3

Transmission and Drive Pulley Assembly

Ref. No.	Part No.	Qty.	Description
1	103–2923–01	1	Deck–Rear
2	1–323252	2	Bearing–Shaft
3	1–323254	2	Flange–Output
4	1–803310	3	Screw–Set
5	1–323363–03	2	Sheave–Transmission
6	321–3	4	Screw–HH
7	5–1336	1	Key–Square
8	3242–4	2	Screw–Set, SQH
9	3296–39	1	Nut–Lock, NI
10	3256–24	1	Washer–Flat
11	1–323285	1	Idler–Drive, Transmission
12	3256–5	2	Washer–Flat
13	322–3	4	Screw–HH
14	1–805005	4	Washer–Lock
15	1–633181	1	Plate–Tapped
16	1–513051	1	Switch–Open, Normally
17	32151–62	2	Ring–Retaining
18	3257–5	3	Key–Woodruff
19	1–323502	2	Shaft–Transmission
20	51–4220	2	Guard–Coupler
21	1–323680	2	Coupler
22	1–323630	1	V–Belt
23	3245–41	2	Screw–HSH
24	1–323278	1	Sheave–Transmission

Ref. No.	Part No.	Qty.	Description
25	302–19	2	Fitting–Grease
26	1–323500	1	Transmission
27	3230–1	2	Bolt–CARR
28	1–323387–03	1	Plate–Shift
29	105–4104	1	Decal–Speed, Ground
30	1–303020	1	Grip–Lever
31	98–3274–03	1	Lever–Shift
32	98–5975	1	Washer–Belleville
33	3296–6	1	Nut–Lock, NI
35	1–323379	1	Washer
36	32128–20	2	Nut–HF
37	9264964	4	Screw
38	1–603403	1	Bolt–Shoulder
39	1–323389–03	2	Bracket–Plate, Shift
40	1–806003	1	Pin–Hair
41	1–303186	1	Bellcrank
42	3290–357	1	Nut–HHF
43	95–2814	1	Decal–Shut Off, Fuel
44	3290–500	2	Screw–PPH
45	1–543296	1	Grommet
46	3231–6	1	Screw–CARR
47	3296–42	4	Nut–Lock, NI
48	98–0776	1	Decal–Caution
49	103–1666	1	Sheave–Transmission
50	103–1667	1	Sheave
53	1–323318–01	2	Hitch–Sulky

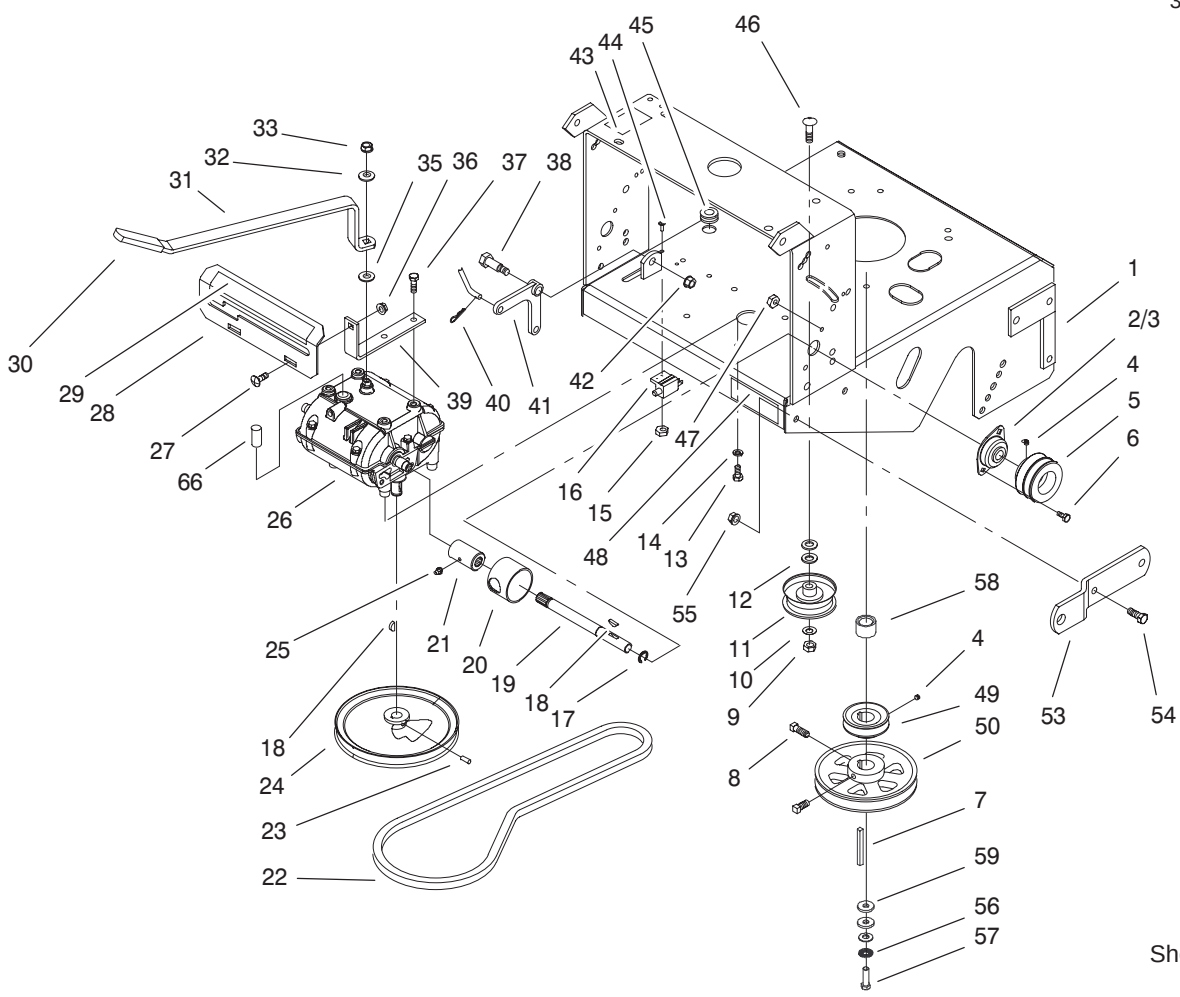

Sheet No.: 3

Transmission and Drive Pulley Assembly (Continued)

Ref. No.	Part No.	Qty.	Description
54	323–6	4	Screw–HH
55	3290–357	4	Nut–HHF
56	98–5975	1	Washer–Belleville
57	33115–035	1	Screw–HH
58	1–633453	1	Spacer–Clutch
59	1–373034	2	Washer
66	1–303282	1	Switch–Start, Neutral

Ref. No.	Part No.	Qty.	Description

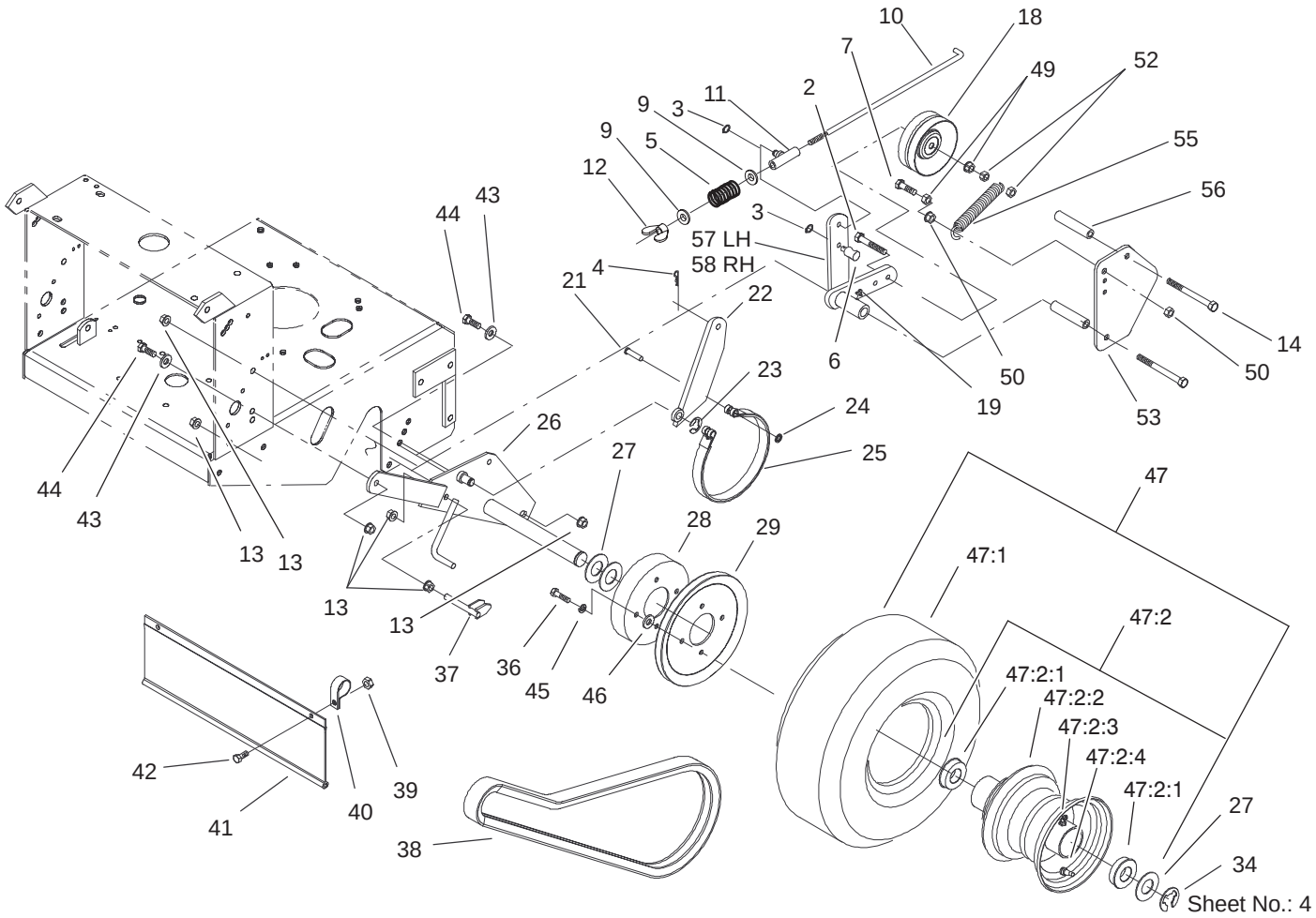

Wheel Drive Assembly

Ref. No.	Part No.	Qty.	Description
2	99–8664	2	Screw–HH
3	32151–47	6	Ring–Retaining
4	1–806003	4	Pin–Hair
5	1–323245	2	Spring–Compression
6	103–1864	2	Swivel–Lever, Drive
7	322–6	2	Screw–HH
9	3256–23	4	Washer–Flat
10	1–323548	2	Linkage–Brake
11	1–322125	2	Swivel–Brake
12	1–513959	2	Wingnut–Nylock
13	3290–357	14	Nut–HHF
14	323–39	4	Screw–HH
18	1–323352	2	Idler–Wheel, Drive
19	302–19	2	Fitting–Grease
21	1–323307	2	Pin–Clevis
22	103–1611–03	2	Arm–Brake
23	32120–47	2	Ring–Retaining, External
24	1–803051	2	Nut–Push
25	1–323262	2	Band–Brake
26	1–322141–03	1	Axle
27	1–523157	6	Washer–Spacer
27	1–543436	8	Washer–Spacer
28	1–323261	2	Drum–Brake
29	1–323349	2	Sheave–Wheel, Drive
34	1–808519	2	Ring–Snap

Ref. No.	Part No.	Qty.	Description
36	322–5	8	Screw–HH
37	1–603430	2	Scraper
38	1–323744	2	Belt–Drive, Wheel
39	3296–29	4	Nut–Lock, NI
40	2412–104	2	R–Clamp
41	98–3259	1	Shield–Trailing
42	322–3	2	Screw–HH
43	98–5975	4	Washer–Belleville
44	323–6	4	Screw–HH
45	1–373034	8	Washer
46	1–805005	8	Washer–Lock
☆47		2	Wheel And Tire ASM
47:1	1–323361	1	Tire
47:2	1–323360	1	Wheel And Hub ASM
47:2:1	1–323329	2	Bearing–Flanged
☆47:2:2		1	Rim ASM
☆47:2:3		1	Fitting–Grease
☆47:2:4		1	Valve Stem And Cap
49	3290–357	2	Nut–HHF
50	32128–20	2	Nut–HF
52	3296–39	8	Nut–Lock, NI
53	1–323287–01	2	Shield–Wheel, Drive
55	1–603402	2	Spring–Extension
56	1–323283	4	Spacer–Shield
57	103–1615–03	1	Arm–Idler, LH
58	103–1616–03	1	Arm–Idler, RH

☆ Not serviced separately

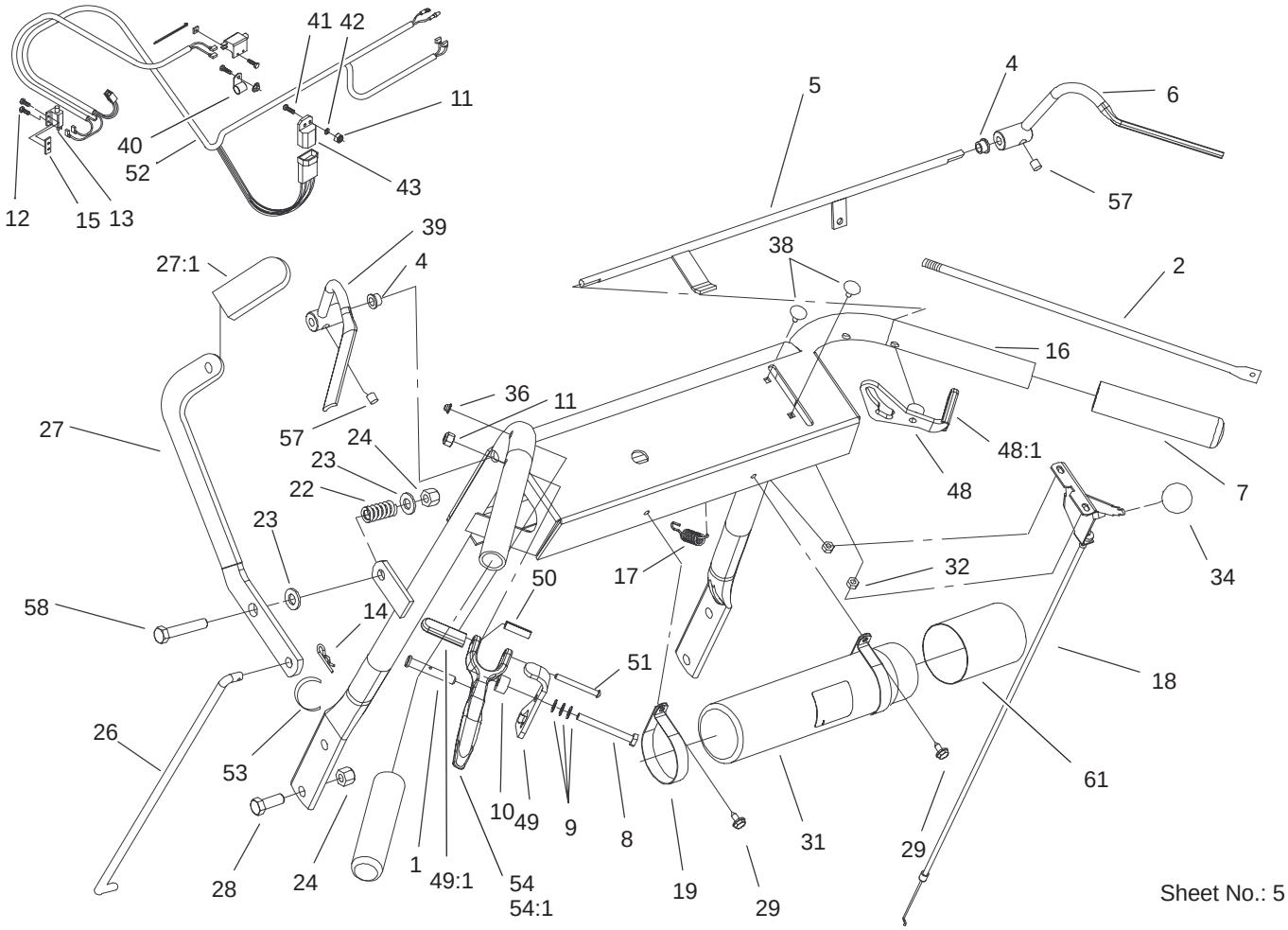

Sheet No.: 5

Upper Handle Assembly

Ref. No.	Part No.	Qty.	Description
1	1–808286	2	Pin–Clevis
2	1–323359	2	Linkage–Wheel, Drive
4	1–303365	2	Bushing–Nylon
5	106–2717–03	1	Operator Presence Control Rod ASM
6	1–412185–03	1	Lever–RH
7	1–303097	2	Grip–Handle
8	321–18	2	Screw–HH
9	1–303435	6	Washer–Spring
10	1–323549	2	Spacer
11	3296–42	3	Nut–Lock, NI
12	3290–500	2	Screw–PPH
13	1–513051	1	Switch–Open, Normally
14	1–806003	2	Pin–Hair
15	1–633181	1	Plate–Tapped
16	106–2719	1	Handle ASM
17	1–303363	1	Spring–Extension
18	1–323322	1	Cable–Control, Throttle
19	2412–120	2	R–Clamp
22	1–303160	1	Spring–Compression
23	3256–4	2	Washer–Flat
24	3296–39	5	Nut–Lock, NI
26	1–323298	1	Linkage–Blade, Upper
27	1–322157	1	Lever ASM

Ref. No.	Part No.	Qty.	Description
27:1	1–303020	1	Grip–Lever
28	323–6	4	Screw–HH
29	32104–76	2	Screw
31	104–7050	1	Housing–Manual
32	3296–2	2	Nut–Lock
34	1–513592	1	Knob–Ball
36	1–803001	2	Nut
38	1–807513	2	Bolt–CARR
39	1–412183–03	1	Lever–LH
40	1–323229	2	Clip–Loom
41	321–4	1	Screw–HH
42	3256–22	1	Washer–Flat
43	1–323430	1	Module–Interlock
48	1–324280	1	RH Thumb Latch ASM
48:1	1–303019	1	Grip–Latch
49	1–324279	1	LH Thumb Latch ASM
49:1	1–303019	1	Grip–Latch
50	1–806340	2	Pin–Roll
51	1–808250	2	Pin–Clevis
52	103–1660	1	Harness–Wiring
53	1–303088	1	Clip–Cable
54	1–302006	2	Drive Lever ASM
54:1	1–303021	1	Grip–Lever, Drive
57	1–803322	2	Screw–Set
58	323–10	1	Screw–HH
61	104–7048	1	Cap–Housing

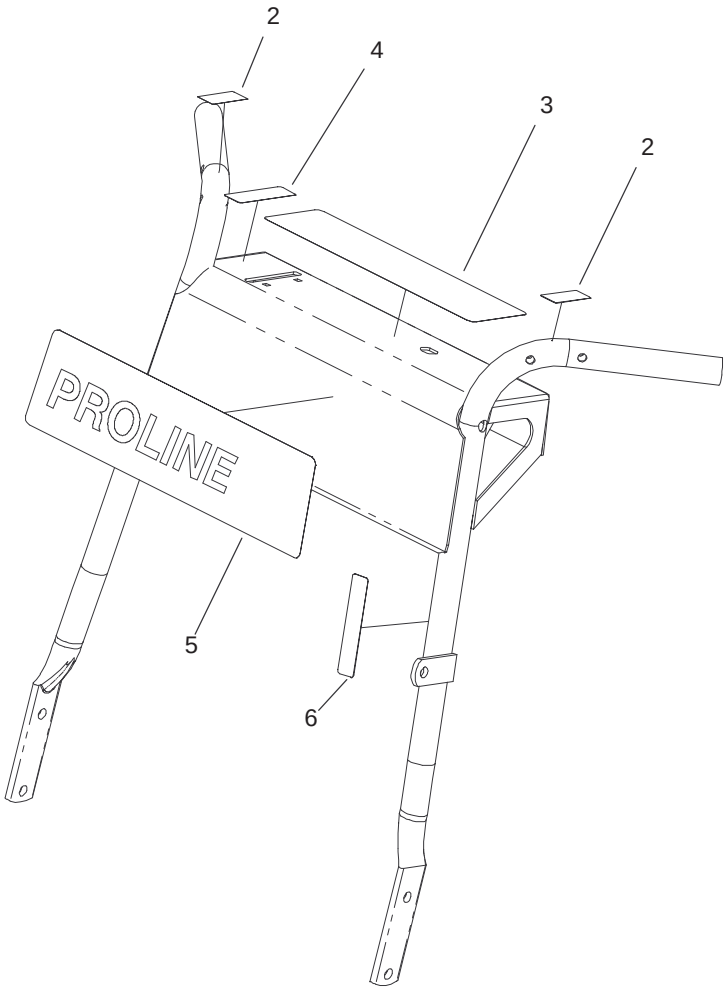

Sheet No.: A1

Handle Assembly No. 106–2719

Ref. No.	Part No.	Qty.	Description
2	105–4111	2	Decal–Lock, Neutral
3	106–2736	1	Decal–Warning
4	106–2734	1	Decal–Throttle
5	106–0750	1	Decal–Proline
6	95–5537	1	Decal–Engage, Deck

Ref. No.	Part No.	Qty.	Description

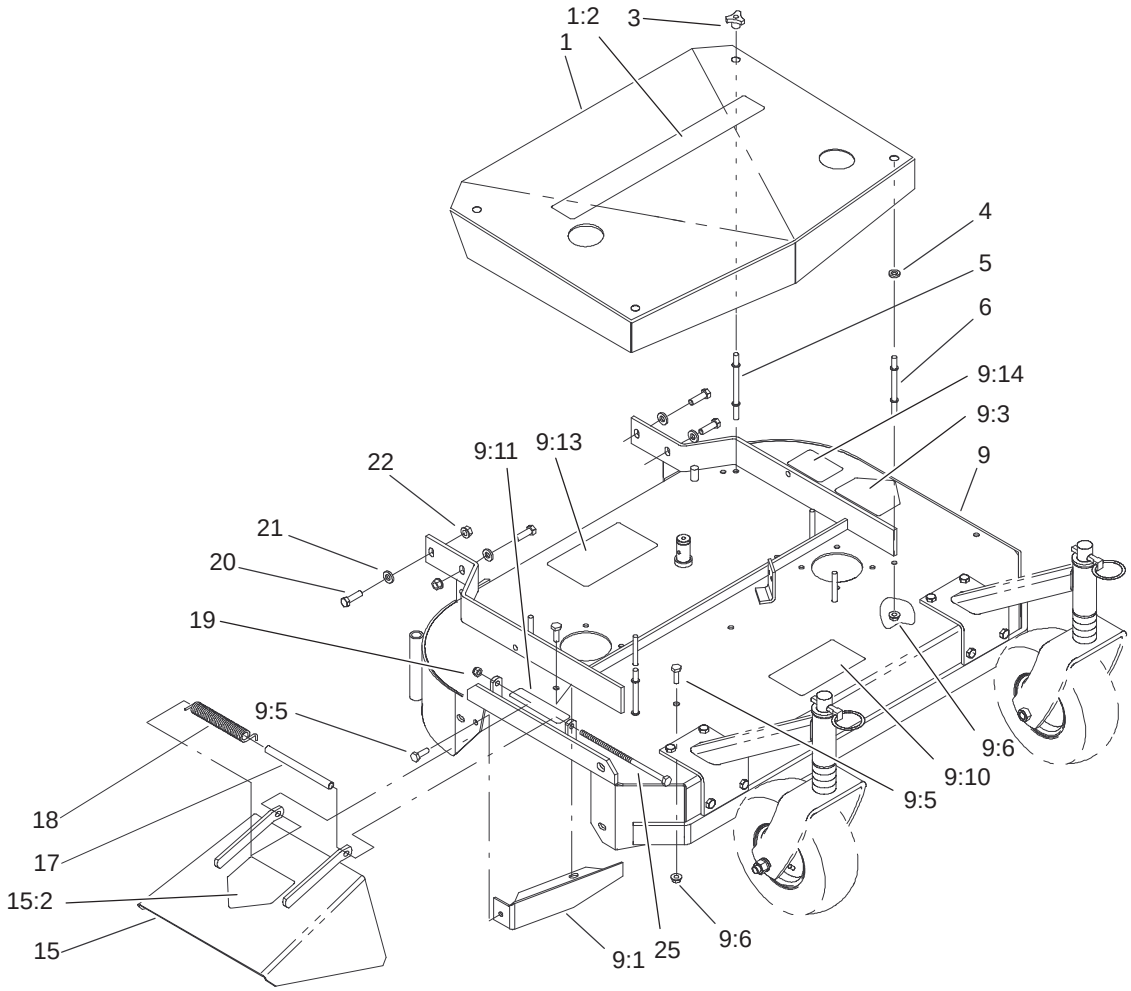

Sheet No.: 6

Deck Assembly

Ref. No.	Part No.	Qty.	Description
1	1–324407	1	Shield–Belt
1:2	106–0710	1	Decal–Proline 32
3	1–323385	4	Knob–3 Prong
4	1–323417	4	Washer
5	1–303536	2	Stud–Shield, Belt (Long)
6	1–303537	2	Stud–Shield, Belt (Short)
9	105–4675	1	Deck ASM
9:1	1–302189–01	1	Baffle
9:3	1–403005	1	Decal–Danger
9:5	322–2	7	Screw–HH
9:6	32128–20	7	Nut–HF
9:10	66–1340	1	Decal–Danger
9:11	98–5954	1	Decal–Missing, Cover
9:13	98–3296	1	Decal–Routing, Belt
9:14	98–5130	1	Decal–Torque
15	1–304256	1	Chute–Discharge
15:2	54–9220	1	Decal–Danger
17	98–3281	1	Spacer–Spring
18	98–3280	1	Spring–Deflector
19	3296–29	1	Nut–Lock, NI
20	323–8	6	Screw–HH
21	98–5975	6	Washer–Belleville
22	3290–357	6	Nut–HHF

Ref. No.	Part No.	Qty.	Description
24	98–5954	1	Decal–Missing, Cover
25	322–50	1	Screw–HH

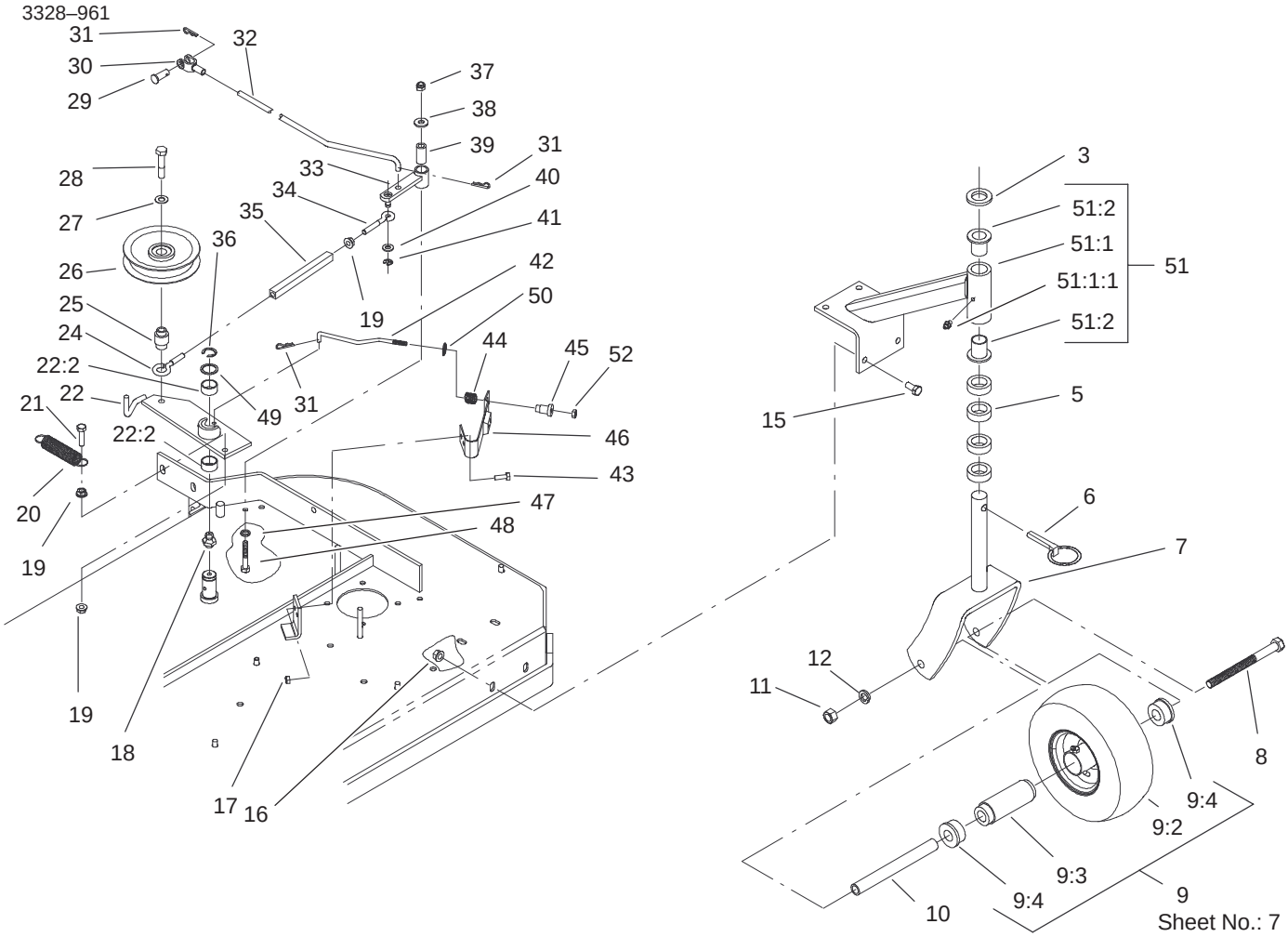

Front Caster and Blade Brake Assembly

Ref. No.	Part No.	Qty.	Description
3	1–513338	2	Washer–Flat
5	1–303314	8	Spacer–Caster
6	1–809020	2	Pin
7	1–322145–01	2	Fork
8	325–20	2	Screw–HH
9	1–513648	2	Wheel And Tire ASM
9:2	1–513808	1	Tire
9:3	1–513809	1	Bearing
9:4	1–513810	2	Bushing
10	1–513547	2	Spacer
11	3217–9	2	Nut–HH
12	3253–7	2	Washer–Lock
15	323–4	8	Screw–HH
16	3290–357	8	Nut–HHF
17	3296–42	2	Nut–Lock, NI
18	302–19	1	Fitting–Grease
19	32128–20	3	Nut–HF
20	1–323071	1	Spring–Extension
21	322–6	2	Screw–HH
22	103–3600	1	Idler Arm ASM
22:2	1–323729	2	Sleeve–Bearing
24	1–303348	1	Eyebolt–Thread, LH
25	1–303434	1	Bushing–Engagement
26	1–603843	1	Pulley–Idler
27	98–5975	1	Washer–Belleville
28	702809	1	Screw–Cap

Ref. No.	Part No.	Qty.	Description
29	1–808280	1	Pin–Clevis
30	1–303105	1	Yoke–Adjustable
31	1–806003	3	Pin–Hair
32	1–323303	1	Linkage–Arm
33	1–322235	1	Arm–Assist
34	1–303238	1	Eyebolt–Thread, RH
35	1–303236	1	Body–Turnbuckle
36	32151–103	1	Ring–Snap
37	3296–29	1	Nut–Lock, NI
38	3256–3	1	Washer–Flat
39	1–403179	1	Tube–Pivot
40	3256–23	1	Washer–Flat
41	32120–35	1	E–Ring
42	1–323718	1	Rod–Brake
43	321–4	2	Screw–HH
44	1–323747	1	Spring–Compression
45	1–323746	1	Spacer–Flanged
46	1–324372	1	Pad/Spring ASM
47	1–303334	1	Washer–Spring
48	322–10	1	Screw–HH
49	1–303352	1	Washer–Spindle
50	1–323748	1	Ring–Push On
51	1–302203	2	Support ASM
☆51:1		1	Support–Caster
51:1:1	302–52	1	Fitting–Grease
51:2	1–303514	2	Bearing–Flanged

☆ Not serviced separately

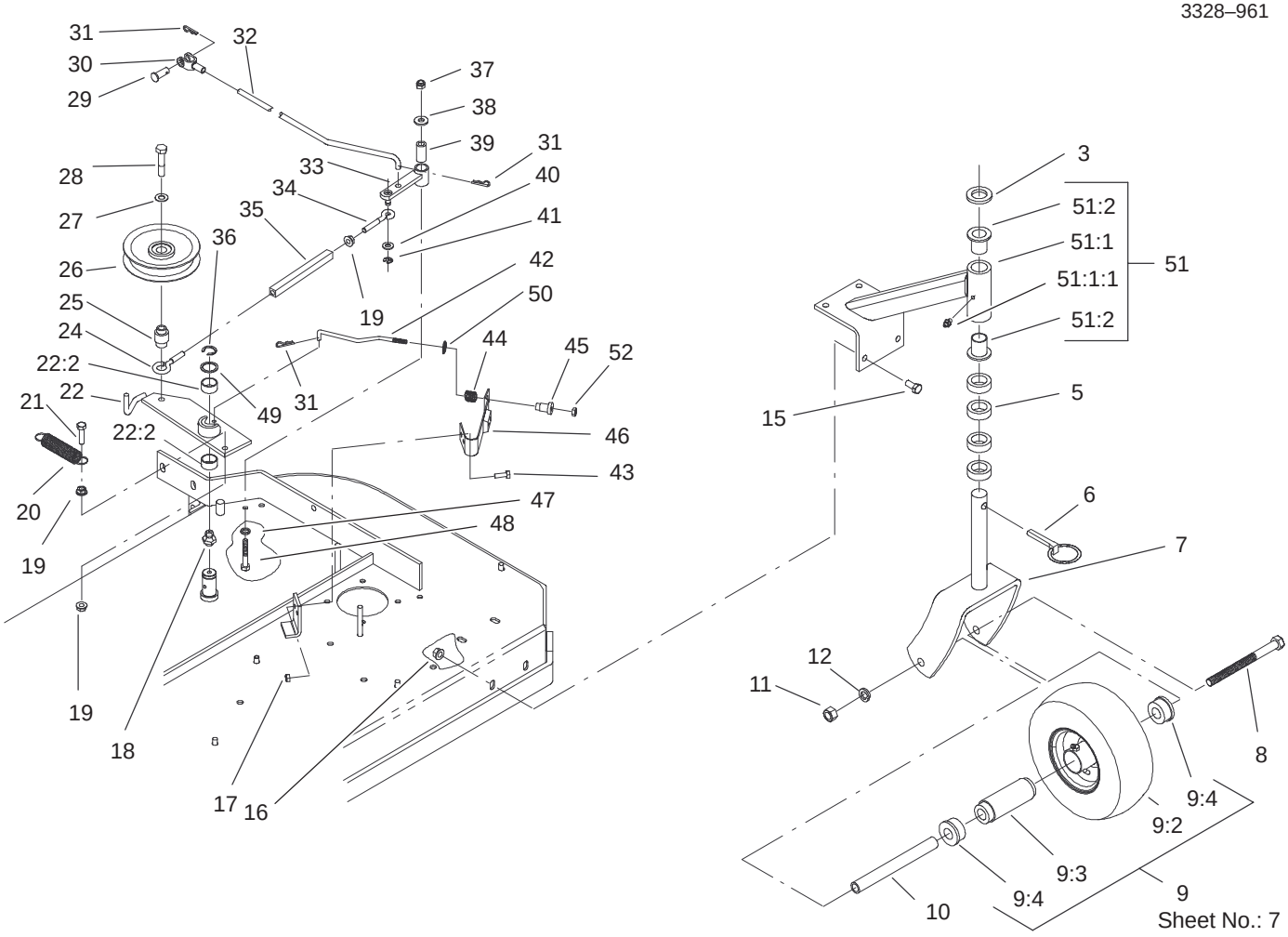

Front Caster and Blade Brake Assembly (Contniued)

Ref. No.	Part No.	Qty.	Description
52	3296–56	1	Nut–Lock, NI

Ref. No.	Part No.	Qty.	Description

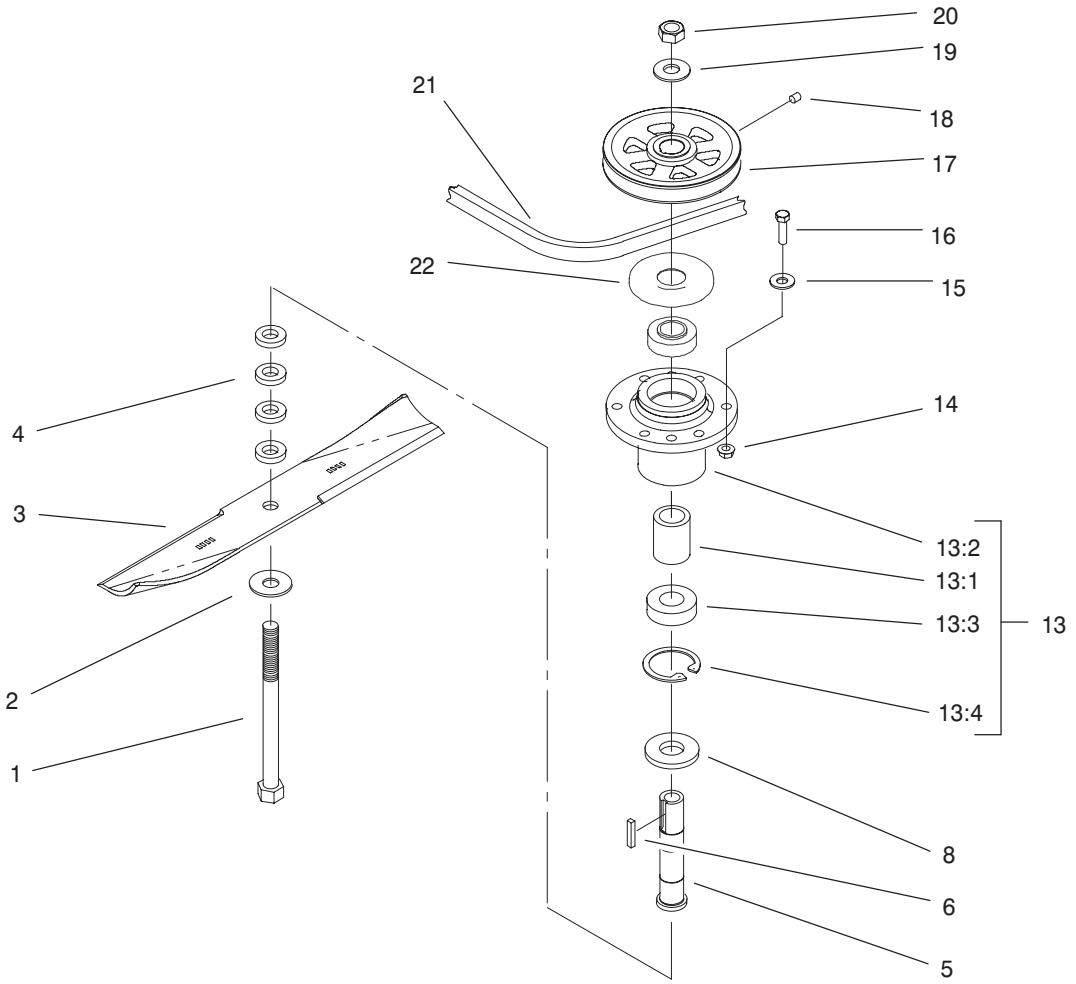

Sheet No.: 8

Spindle Assembly

Ref. No.	Part No.	Qty.	Description
1	1–800861	2	Screw–Cap, HH
2	1–513208	2	Washer–Spring
3	103–2507	2	Blade–Lift, Low
3	103–2527	2	Blade–Notched
4	1–323539	8	Spacer–Drive, Blade
5	1–323529	2	Tube–Spindle, Short
6	1–807267	2	Key
8	103–2535	2	Spacer–Guard, Bottom
☆13		2	Cutter Housing ASM
13:1	1–323532	1	Housing–Spindle
13:2	103–2477	2	Bearing–Ball
13:3	103–2534	1	Spacer–Bearing
13:4	32120–8	1	Ring–Snap
14	32128–20	8	Nut–HF
15	1–303334	8	Washer–Spring
16	322–6	8	Screw–HH
17	1–403183	2	Sheave
18	1–803310	2	Screw–Set
19	1–323339	2	Washer–Retainer, Sheave
20	3219–6	2	Nut–Hex
21	1–323745	1	Belt–Blade, Drive
22	103–1330	2	Guard–Bearing, Top

Ref. No.	Part No.	Qty.	Description

☆ Not serviced separately

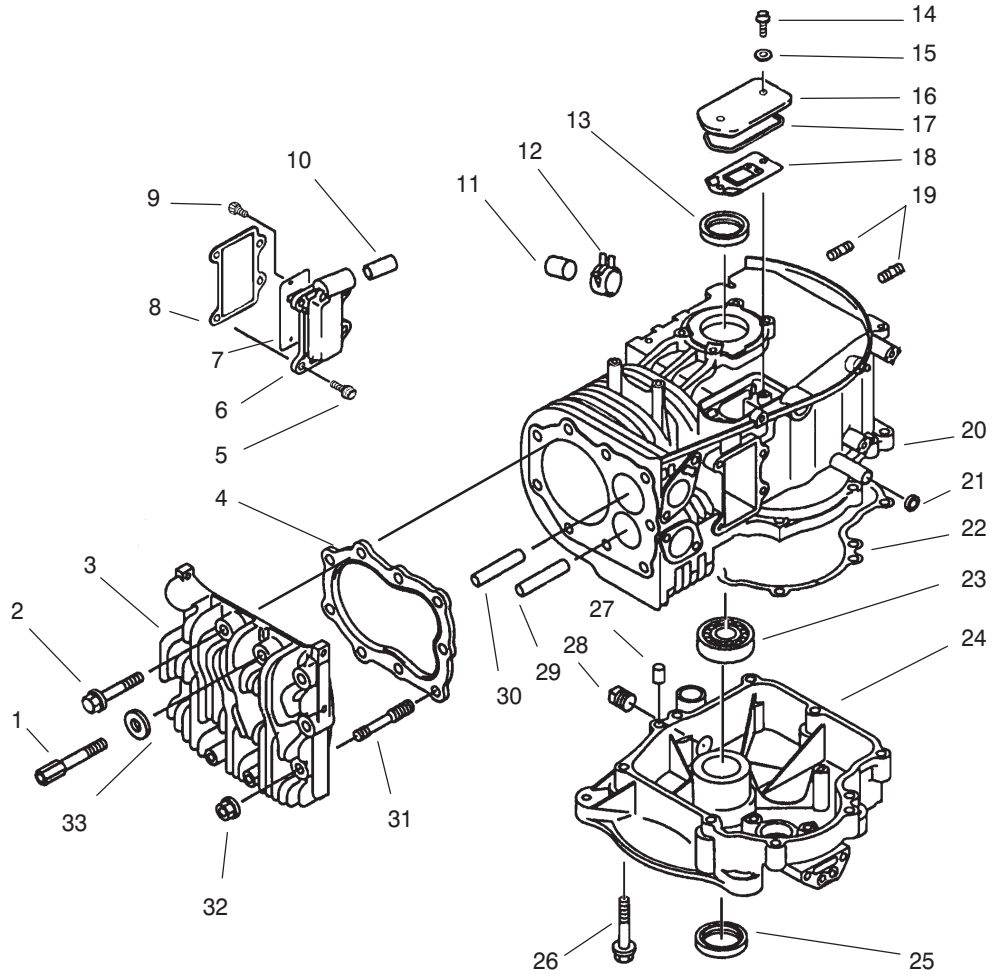

Crankcase Assembly
Kawasaki FB460V–MS14

Ref. No.	Part No.	Qty.	Description
1	92002–2258	2	Bolt
2	130g1055	4	Bolt–Flange
3	11001–2151	1	Head–Cylinder
4	11004–2091	1	Gasket–Head
5	130g0616	4	Bolt–Flange
6	49108–2011	1	Cover–Valve Chamber
7	14025–2143	1	Cover
8	11060–2375	1	Gasket
9	92009–2307	2	Screw
10	92059–2142	1	Tube
11	92066–2096	1	Plug
12	92170–2088	1	Clamp
13	92049–2096	1	Seal–Oil
14	92002–2087	2	Bolt
15	11060–2323	2	Gasket
16	14025–2040	1	Cover–Breather
17	11009–2339	1	Gasket–Cover
18	14069–2062	1	Breather
19	92004–2083	4	Stud–6 X 14
20	49120–6108	1	Crankcase–Complete
21	92049–2097	1	Seal–Oil
22	11060–2015	1	Gasket–Crankcase
23	601a6207	1	Bearing–Ball
24	49015–6176	1	Cover–Crankcase

Ref. No.	Part No.	Qty.	Description
25	92049–2227	1	Seal–Oil
26	130g0845	8	Bolt–Flange
27	92043–1263	2	Pin
28	92066–2097	1	Plug
29	49002–2071	1	Guide–Valve Exhaust
30	49002–2070	1	Guide–Valve Intake
31	92004–2082	3	Stud
32	92015–2115	3	Nut
33	410b1000	2	Washer–Plain

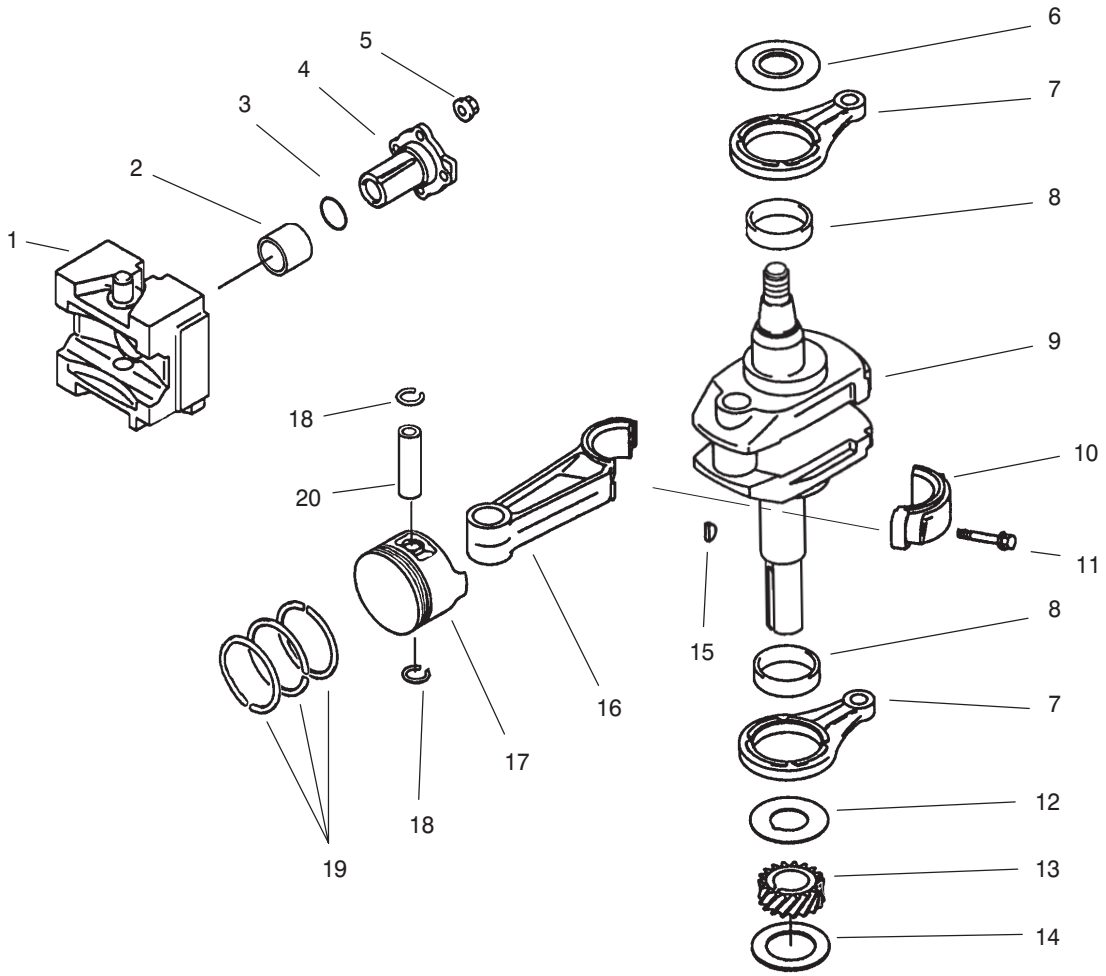

Piston/Crankshaft Crankcase Assembly
Kawasaki FB460V–MS14

Ref. No.	Part No.	Qty.	Description
1	13042–6006	1	Weight Incl #2
2	92141–2097	1	Bearing–Plane
3	92055–2072	1	O–Ring
4	13107–2253	1	Shaft
5	92015–1193	4	Nut
6	92026–2164	1	Spacer
7	46102–6007	2	Rod Incl #8
8	92141–2108	2	Bearing–Plane
9	49119–2177	1	Crankshaft ASM
11	92150–2193	2	Bolt
12	92026–2156	1	Spacer
13	59056–2105	1	Gear–Helical
14	92025–2145	A/R	Shim T=1.18
14	92025–2146	A/R	Shim T=1.25
14	92025–2147	A/R	Shim T=1.32
14	92025–2148	A/R	Shim T=1.39
14	92025–2149	A/R	Shim T=1.46
14	92025–2150	A/R	Shim T=1.53
14	92025–2151	A/R	Shim T=1.60
14	92025–2152	A/R	Shim T–1.67
14	92025–2153	A/R	Shim T=1.74
14	92180–2015	A/R	Shim T=1.11
14	92180–2016	A/R	Shim T=1.81
15	92038–2094	1	Key

Ref. No.	Part No.	Qty.	Description
16	13251–6005	1	Rod ASM Incl #10 11
16	13251–6007	A/R	Rod ASM Incl #10 11 0.50
17	13001–2096	1	Piston
17	13029–2084	A/R	Piston 0.25
17	13029–2085	A/R	Piston 0.50
18	92033–2176	2	Ring–Snap
19	13008–6009	1	Set–Ring Piston
19	13008–6010	A/R	Set–Ring Piston 0.25
19	13008–6011	A/R	Set–Ring Piston 0.50
20	13002–2066	1	Pin–Piston

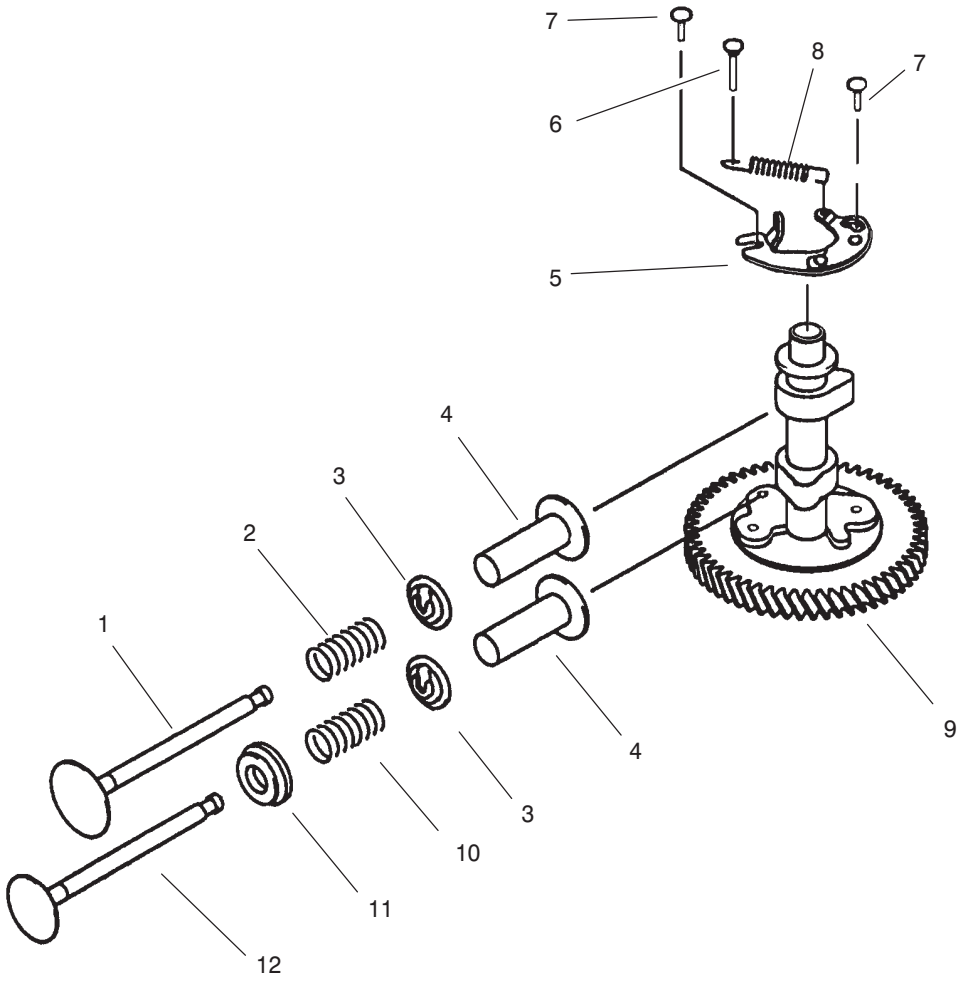

Valve/Camshaft Assembly
Kawasaki FB460V–MS14

Ref. No.	Part No.	Qty.	Description
1	12004–2076	1	Valve–Intake
2	49078–2075	1	Spring–Valve
3	39108–2054	2	Retainer–Spring
4	12032–2058	2	Tappet
5	21118–2068	1	Decompressor
6	92043–2167	1	Pin
7	92043–2113	2	Pin
8	92144–2171	1	Spring
9	49118–2134	1	Camshaft Incl # 5–8
10	49078–2074	1	Spring–Valve
11	12039–2052	1	Rotator
12	12005–2066	1	Valve–Exhaust

Ref. No.	Part No.	Qty.	Description

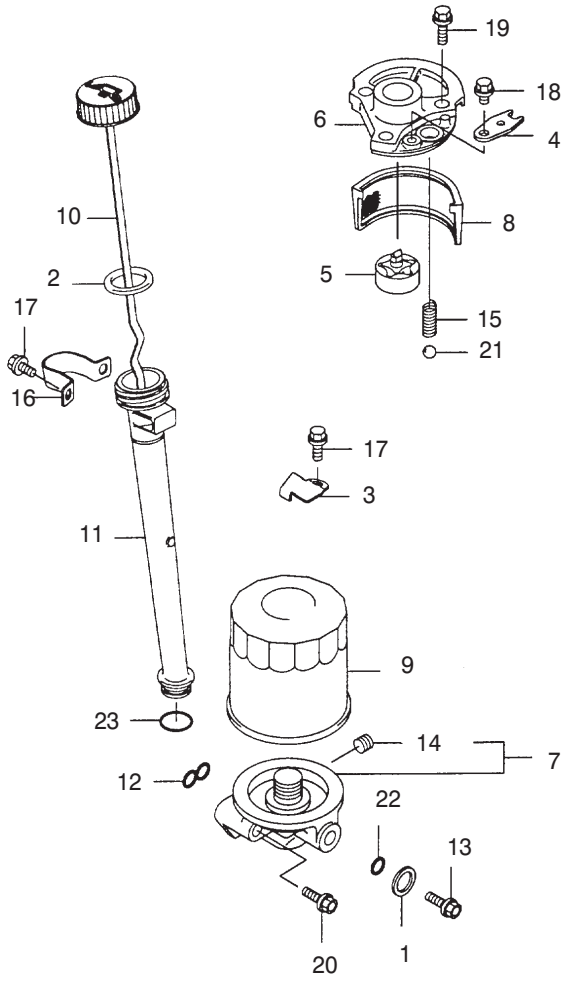

Lubrication Equipment Assembly
Kawasaki FB460V–MS14

Ref. No.	Part No.	Qty.	Description
1	11009–2175	1	Gasket
2	11009–2346	1	Gasket–Oil Gauge
3	13169–2359	1	Plate
4	13270–2054	1	Plate
5	16082–2057	1	Pump Assy–Oil
6	16142–6001	1	Cover–Pump
7	23062–6001	1	Bracket–Comp
8	49065–2056	1	Filter–Oil
9	49065–2071	1	Filter–Oil
10	52005–2058	1	Gauge–Oil
11	59231–2059	1	Filler
12	92055–2063	1	Ring–O
13	92066–2093	1	Plug
14	92066–2211	1	Plug
15	92081–2216	1	Spring
16	92170–2014–9H	1	Clamp
17	130B0508	3	Bolt–Flanged
18	130B610	1	Bolt–Flanged
19	130G0825	3	Bolt–Flanged
20	130G0845	2	Bolt–Flanged
21	600A1000	1	Ball–Steel
22	670D1507	1	O Ring
23	670D2016	1	O Ring

Ref. No.	Part No.	Qty.	Description

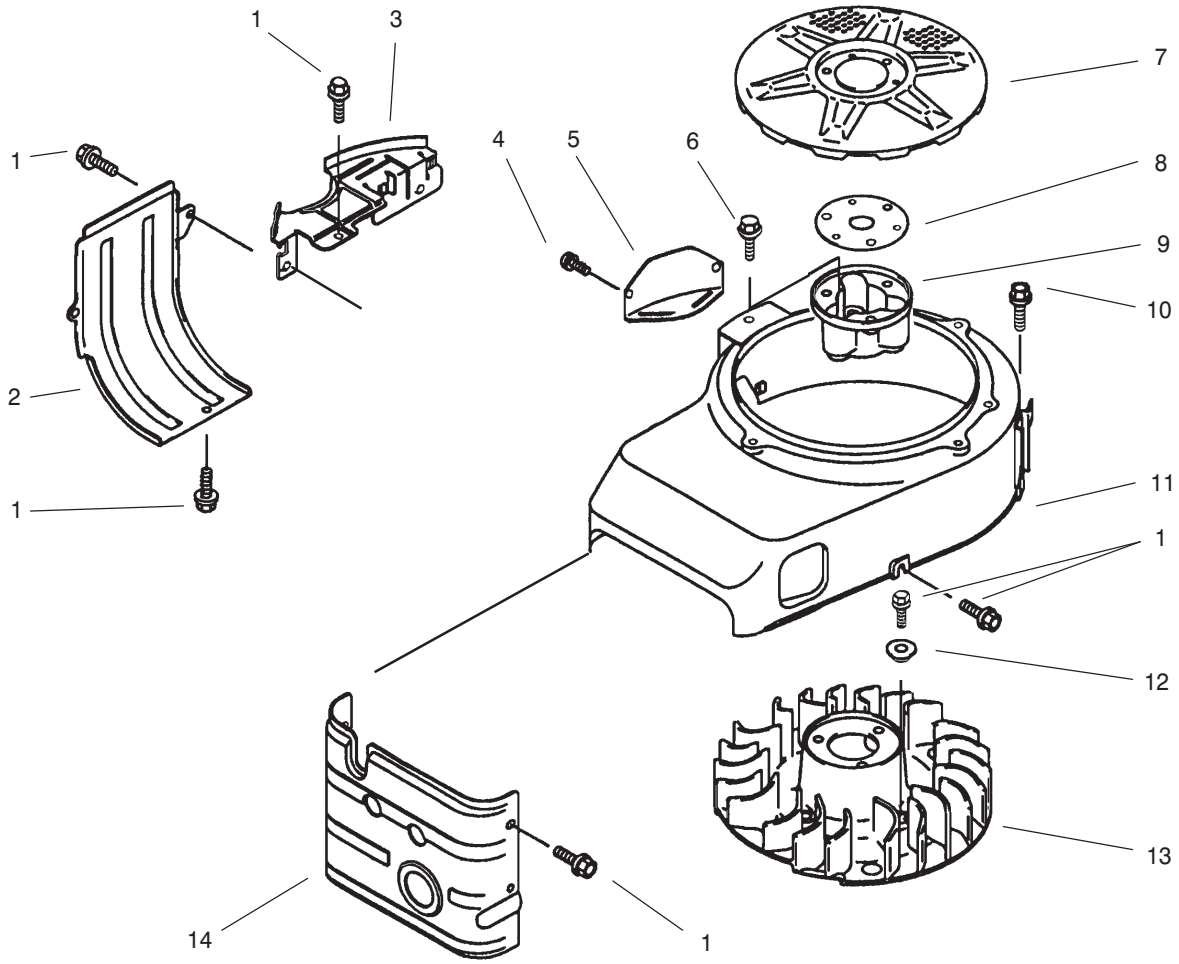

Cooling Equipment Assembly
Kawasaki FB460V–MS14

Ref. No.	Part No.	Qty.	Description
1	130g0610	9	Bolt–Flange
2	49089–2199–9H	1	Shroud–Engine
3	59066–2295–9H	1	Housing–Fan
4	234b0408	2	Screw
5	14024–2038–9H	1	Cover
6	130b0820	3	Bolt–Flange
7	14037–2104–9H	1	Screen
8	92025–2003	A/R	Shim T–1.20
9	11044–2084	1	Bracket
10	130go614	6	Bolt–Flange
11	59066–2677–9H	1	Housing–Fan
12	92143–2179	4	Collar
13	59041–2081	1	Fan
14	49089–2181–9H	1	Shroud–Engine

Ref. No.	Part No.	Qty.	Description

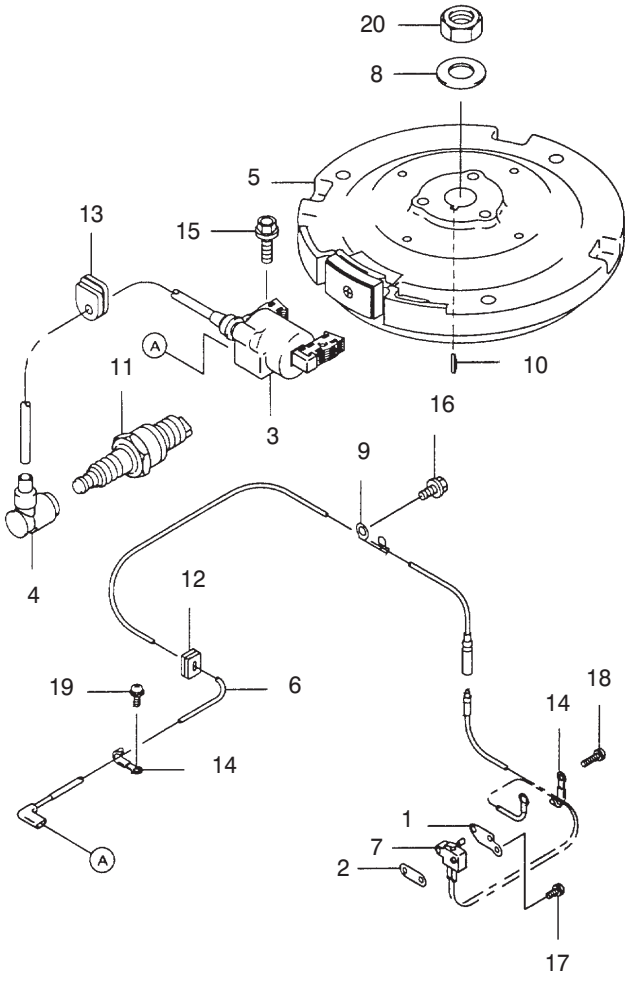

Electric Equipment Assembly
Kawasaki FB460V–MS14

Ref. No.	Part No.	Qty.	Description
1	13183–2373	1	Plate
2	13183–2374	1	Plate
3	21121–2086	1	Coil–Ignition
4	21130–2060	1	Cap–Spark Plug
5	21194–2324	1	Flywheel–Comp
6	26011–2326	1	Wire–Lead L530
7	27010–2167	1	Switch
8	92022–2178	1	Washer
9	92037–2011	1	Clamp
10	92038–2094	1	Key
11	92070–2105	1	Plug–Spark BMR4A (NGK)
12	92071–2099	1	Grommet
13	92071–2100	1	Grommet
14	92170–2029	2	Clamp
15	130B0520	2	Bolt–Flanged
16	130B0610	1	Bolt–Flanged
17	223B0410	1	Screw–Pan Ws Cros
18	233B0416	1	Screw–Pan Ws Cros
19	234B0408	1	Screw–Pan Wsp
20	314G1800	1	Nut–Hex Fine

Ref. No.	Part No.	Qty.	Description

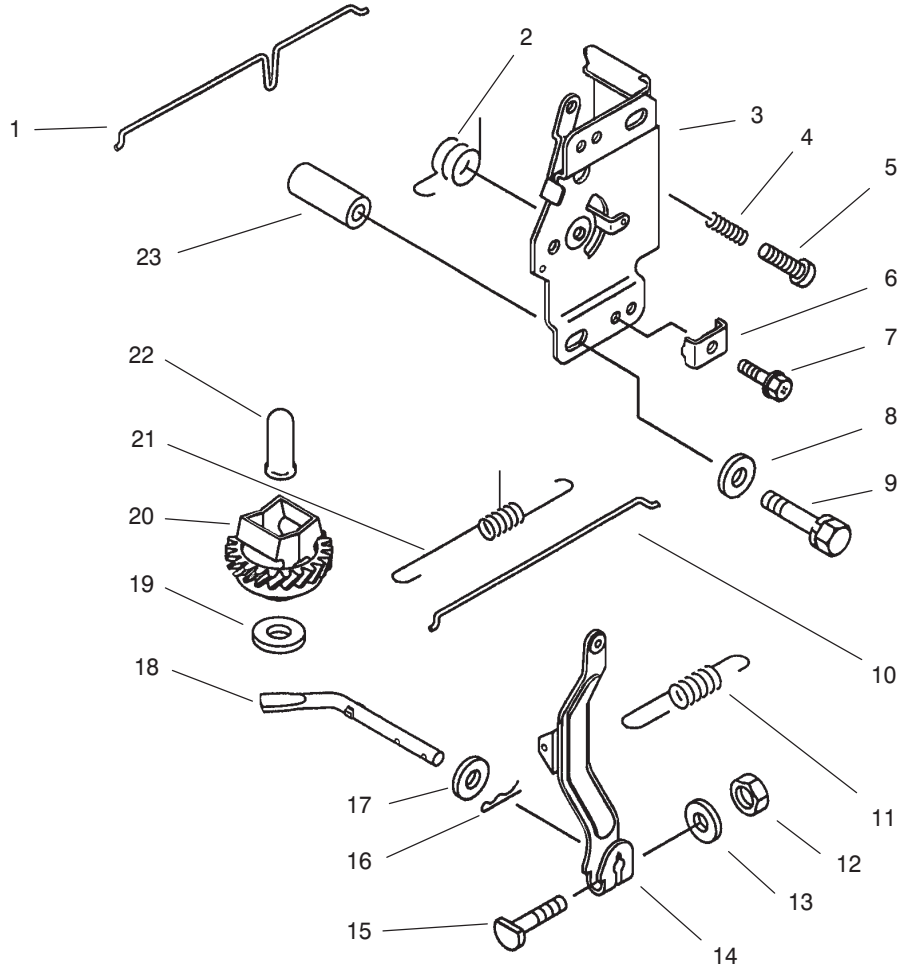

Control Equipment Assembly
Kawasaki FB460V–MS14

Ref. No.	Part No.	Qty.	Description
1	16169–2126	1	Link–Choke
2	92081–2316	1	Spring
3	49113–2090	1	Panel Incl #2 4–7
4	92144–2266	1	Spring
5	214b0416	1	Screw
6	92037–2020	1	Clamp
7	92002–2188	1	Bolt
8	92200–2070	2	Washer
9	180b0650	2	Bolt
10	16171–2083	1	Link
11	92144–2008	1	Spring–Governor
12	311b0600	1	Nut–HH
13	411b0600	1	Washer
14	21187–2052	1	Arm ASM
15	92002–2269	1	Bolt
16	554a0600	1	Pin–Snap
17	92200–2029	1	Washer
18	39003–2072	1	Arm–Pivot
19	92200–2036	1	Washer
20	49110–2084	1	Governor ASM
21	92081–2213	1	Spring
22	42036–2060	1	Sleeve
23	92027–2071	2	Collar

Ref. No.	Part No.	Qty.	Description

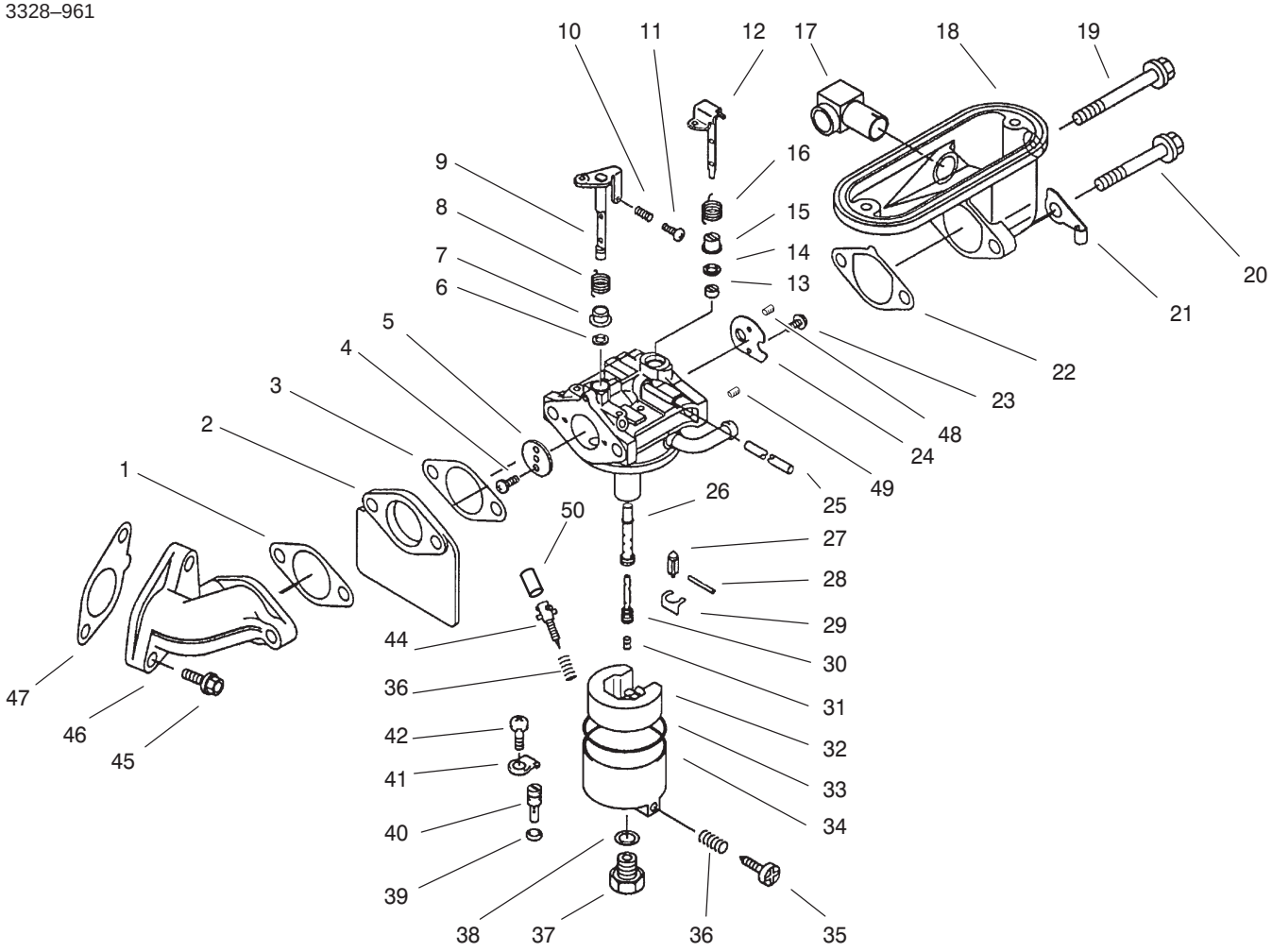

Carburetor Assembly
Kawasaki FB460V–MS14

Ref. No.	Part No.	Qty.	Description
0	15003–2467	1	Carburetor ASM
1	11060–2338	1	Gasket–Intake Pipe
2	16073–2091	1	Insulator
3	11060–2339	2	Gasket–Carburetor
4	92009–2080	2	Screw
5	16025–2141	1	Valve–Throttle #110
6	92093–2082	1	Seal
7	92027–2025	1	Collar
8	92081–2077	1	Spring
9	16041–2009	1	Shaft–Throttle
10	92081–2046	1	Spring
11	92009–2079	1	Screw
12	16041–2010	1	Shaft–Choke
13	92027–2003	1	Collar
14	92093–2069	1	Seal
15	92143–2142	1	Collar
16	92144–2160	1	Spring
17	59071–2062	1	Joint
18	16060–2108	1	Pipe–Intake
19	92002–2254	1	Bolt
20	92002–2253	1	Bolt
21	92170–2019	1	Clamp
22	11060–2338	1	Gasket
23	92009–2081	2	Screw

Ref. No.	Part No.	Qty.	Description
24	16126–2206	1	Valve–Choke
25	92059–2266	1	Tube
26	49121–2207	1	Nozzle–Main #98A
27	16030–2073	1	Valve–Float
28	92043–2006	1	Pin
29	92033–2067	1	Ring–Snap
30	49123–2078	1	Holder–Main Jet
31	92063–2294	1	Jet–Main
32	16031–2066	1	Float
33	11009–2024	1	Gasket
34	16020–2109	1	Chamber–Float Incl 35 and 36
35	92009–2015	1	Screw
36	92081–2009	2	Spring
37	92150–2146	1	Bolt
38	11009–2025	1	Gasket
39	16038–024	1	Gasket
40	92064–2108	1	Jet–Pilot
41	13183–2252	1	Plate
42	92009–2244	1	Screw
44	16014–2076	1	Screw–Pilot Air
45	130g0825	2	Bolt–Flange
46	16060–2109	1	Pipe–Intake
47	11060–2337	1	Gasket–Intake Pipe

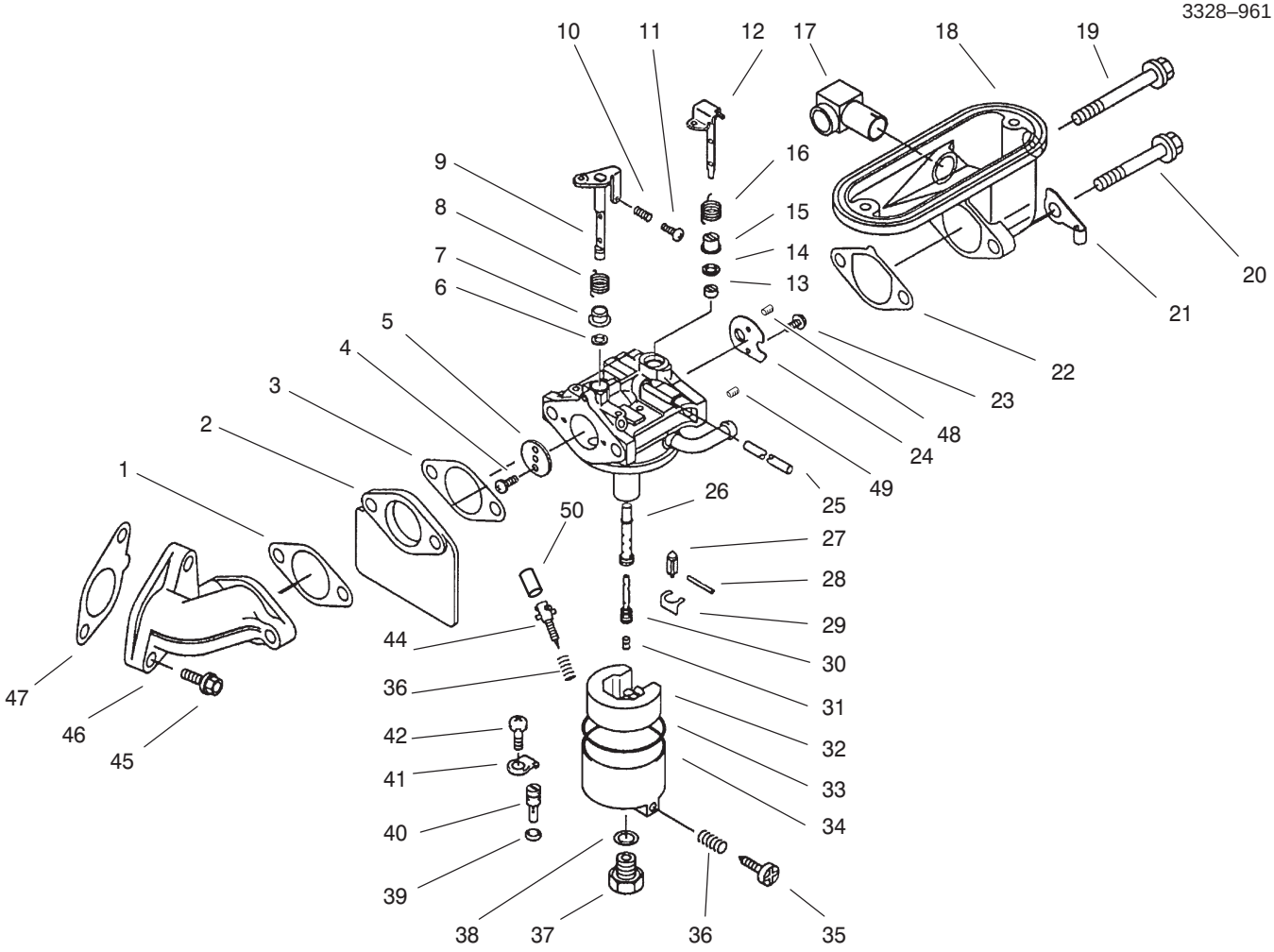

Carburetor Assembly (Continued)
Kawasaki FB460V–MS14

Ref. No.	Part No.	Qty.	Description
48	16035–2063	1	Jet–Air #0.9
49	16035–2051	1	Jet–Air #1.4
50	39076–2053	1	Limiter

Ref. No.	Part No.	Qty.	Description

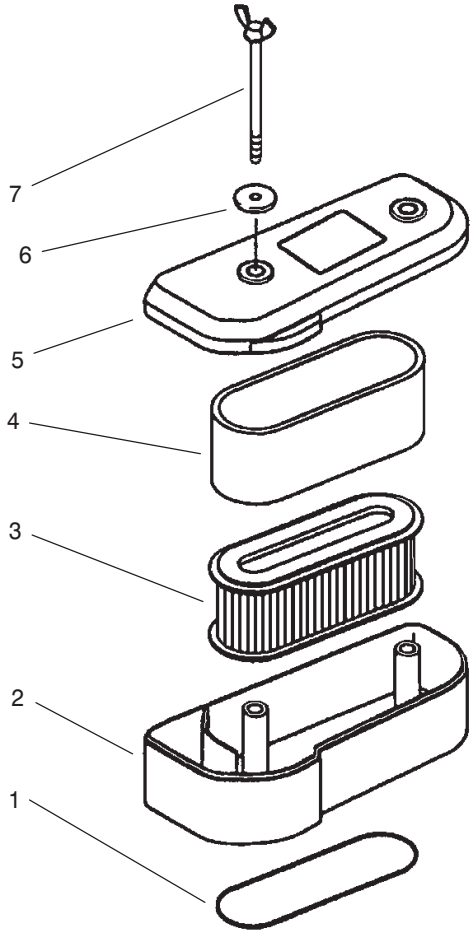

Air Filter Assembly
Kawasaki FB460V–MS14

Ref. No.	Part No.	Qty.	Description
1	11009–2443	1	Gasket–Air Filter
2	11011–2174	1	Case–Air Filter
3	11013–2021	1	Element–Air Filter
4	11013–2020	1	Element–Air Filter
5	11012–2192	1	Cap–Air Filter
6	92022–2220	2	Washer
7	92002–2230	2	Bolt
	11010–2291	1	Filter ASM

Ref. No.	Part No.	Qty.	Description

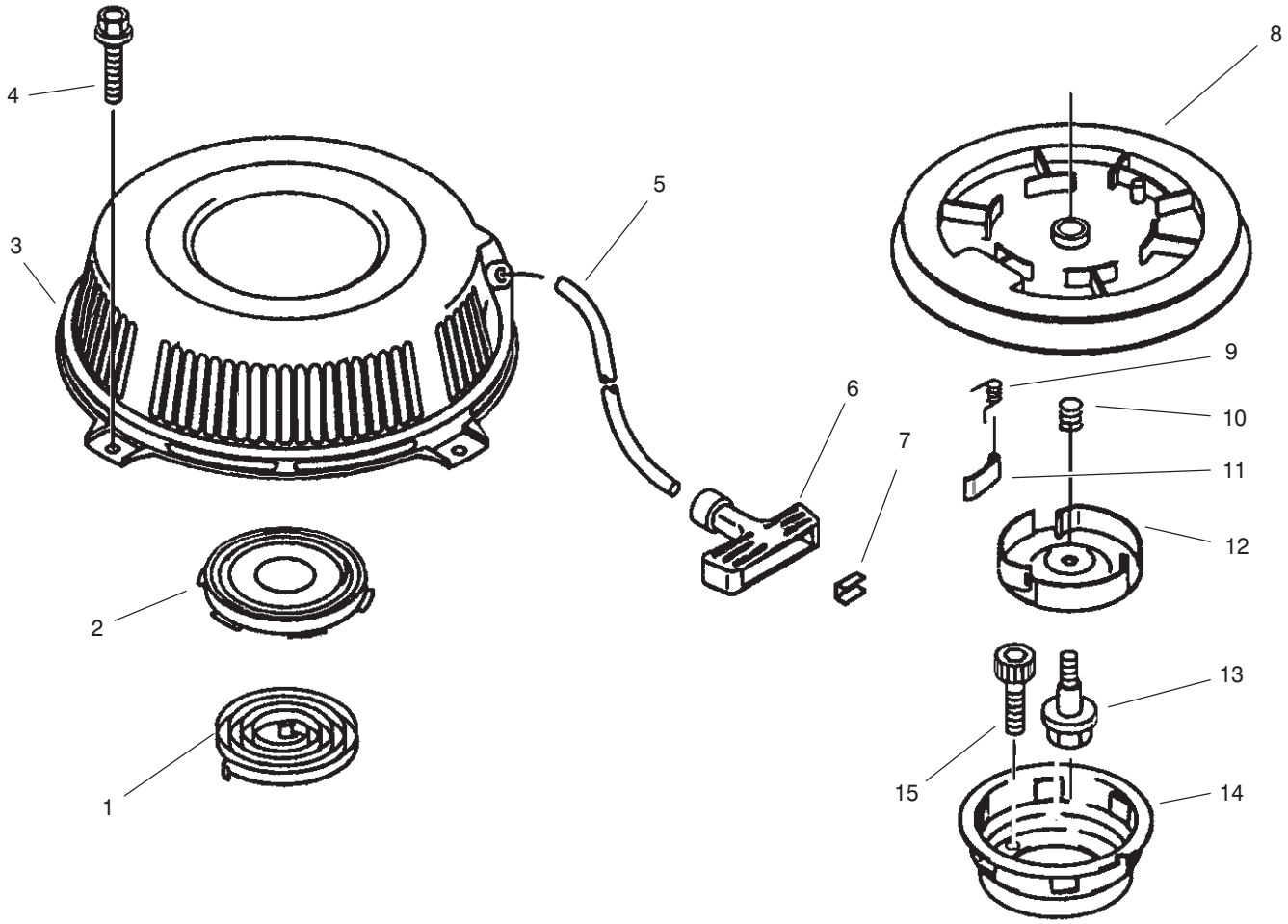

Starter Assembly
Kawasaki FB460V–MS14

Ref. No.	Part No.	Qty.	Description
1	90281–2267	1	Spring–Recoil
2	32099–2060	1	Case–Spring
3	32099–2239–yk	1	Case–Recoil Starter
4	130b0610	4	Bolt–Flange
5	59106–2060	1	Rope–Starter
6	46075–2059	1	Grip–Starter Rope
7	92022–2248	1	Washer
8	59101–2054	1	Reel–Recoil Starter
9	92081–2021	3	Spring
10	92081–2268	1	Spring–Return
11	13165–2073	3	Pawl–Recoil Starter
12	14020–2054	1	Retainer–Recoil
13	92001–2027	1	Bolt
14	49080–2144	1	Pulley–Starting
15	120p0620	3	Bolt–Socket
16	49088–2412–yk	1	Starter Incl #1–5 8–14

Ref. No.	Part No.	Qty.	Description

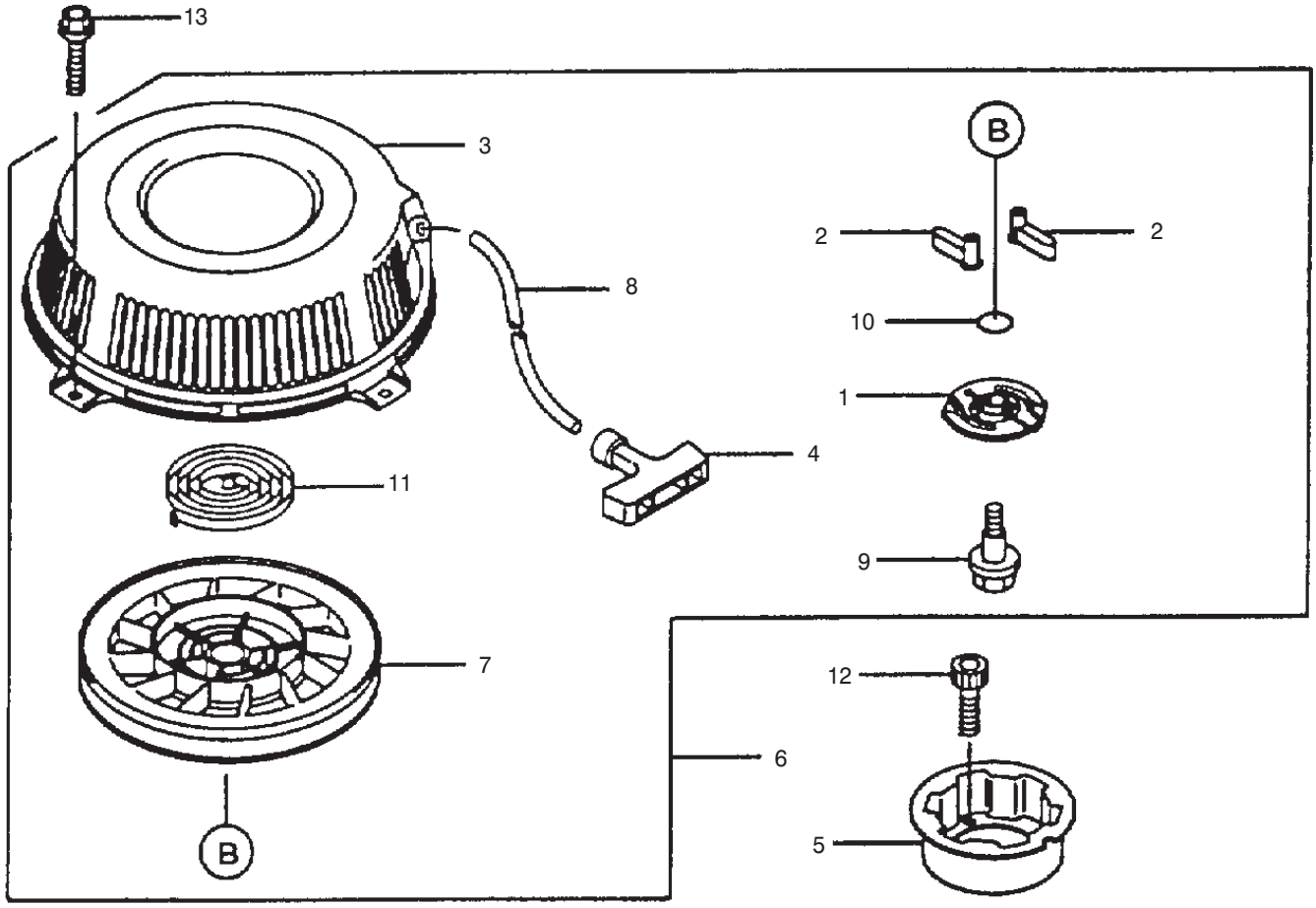

Starter Assembly
Kawasaki FB460V–MS14

Ref. No.	Part No.	Qty.	Description
1	10370–2102	1	Guide
2	13165–2092	2	Pawl–Recoil Starter
3	32099–2308–9H	1	Case–Spring
4	46075–2106	1	Grip–Recoil Starter
5	49080–2176	1	Pulley–Starting
6	49088–2473–9H	1	Starter–Recoil
7	59101–2103	1	Reel–Recoil Starter
8	59106–2082	1	Rope
9	92009–2382	1	Screw
10	92033–2175	1	Ring–Snap
11	92144–2399	1	Spring
12	120P0620	3	Bolt–Socket
13	130B0610	4	Bolt–Flanged

Ref. No.	Part No.	Qty.	Description

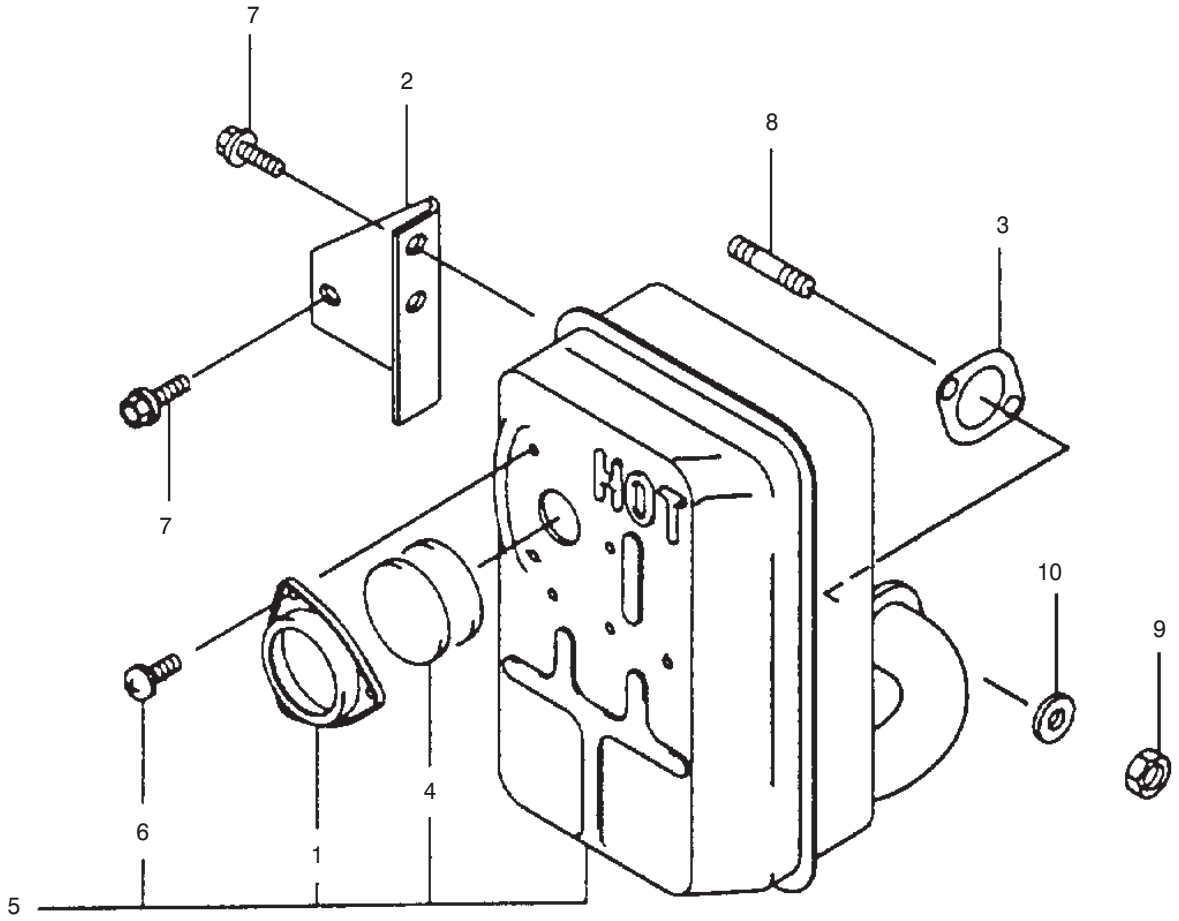

Muffler Assembly
Kawasaki FB460V–MS14

Ref. No.	Part No.	Qty.	Description
1	11012–2251–9Y	1	Cap–Spark Arrester
2	11046–2163–9Y	1	Bracket
3	11060–2379	1	Gasket
4	18077–2052	2	Arrester–Spark
5	49069–2210–9Y	1	Muffler Assembly
6	92009–2166	3	Screw
7	130G0812	4	Bolt–Flanged
8	171G0818	2	Bolt–Stud
9	317R0800	2	Nut–Hex Small
10	461F0800	2	Washer–Spring

Ref. No.	Part No.	Qty.	Description

Maintenance Record

Date								

Maintenance Record

Date								


TORO®